ESP32

ESP-IDF 编程指南

Release v4.3.6

乐鑫信息科技

2023 年 08 月 31 日

Table of contents

Table of contents i

1 快速入门 3
- 1.1 概述 . . . 3
- 1.2 准备工作 . . . 3
- 1.3 开发板简介 . . . 4
  - 1.3.1 ESP32-DevKitC V4 入门指南 . . . 4
  - 1.3.2 ESP-WROVER-KIT V4.1 入门指南 . . . 9
  - 1.3.3 ESP32-PICO-KIT V4/V4.1 入门指南 . . . 34
  - 1.3.4 ESP32-Ethernet-Kit V1.2 入门指南 . . . 44
  - 1.3.5 ESP32-DevKitS(-R) . . . 70
  - 1.3.6 ESP32-PICO-KIT-1 . . . 76
  - 1.3.7 ESP32-PICO-DevKitM-2 . . . 81
  - 1.3.8 ESP32-DevKitM-1 . . . 86
- 1.4 详细安装步骤 . . . 90
  - 1.4.1 设置开发环境 . . . 91
  - 1.4.2 创建您的第一个工程 . . . 91
- 1.5 第一步：安装准备 . . . 91
  - 1.5.1 Windows 平台工具链的标准设置 . . . 91
  - 1.5.2 Linux 平台工具链的标准设置 . . . 96
  - 1.5.3 macOS 平台工具链的标准设置 . . . 97
- 1.6 第二步：获取 ESP-IDF . . . 98
  - 1.6.1 Linux 和 macOS 操作系统 . . . 98
  - 1.6.2 Windows 操作系统 . . . 98
- 1.7 第三步：设置工具 . . . 98
  - 1.7.1 Windows 操作系统 . . . 99
  - 1.7.2 Linux 和 macOS 操作系统 . . . 99
  - 1.7.3 下载工具备选方案 . . . 99
  - 1.7.4 自定义工具安装路径 . . . 100
- 1.8 第四步：设置环境变量 . . . 100
  - 1.8.1 Windows 操作系统 . . . 100
  - 1.8.2 Linux 和 macOS 操作系统 . . . 100
- 1.9 第五步：开始创建工程 . . . 101
  - 1.9.1 Linux 和 macOS 操作系统 . . . 101
  - 1.9.2 Windows 操作系统 . . . 101
- 1.10 第六步：连接设备 . . . 101
- 1.11 第七步：配置 . . . 101
  - 1.11.1 Linux 和 macOS 操作系统 . . . 101
  - 1.11.2 Windows 操作系统 . . . 102
- 1.12 第八步：编译工程 . . . 102
- 1.13 第九步：烧录到设备 . . . 103
  - 1.13.1 烧录过程中可能遇到的问题 . . . 103
  - 1.13.2 常规操作 . . . 104
- 1.14 第十步：监视器 . . . 104
- 1.15 更新 ESP-IDF . . . 106
- 1.16 相关文档 . . . 106

1.16.1 与 ESP32 创建串口连接 . . . 106
1.16.2 Eclipse IDE 创建和烧录指南 . . . 112
1.16.3 VS Code IDE 快速入门 . . . 112
1.16.4 IDF 监视器 . . . 113
1.16.5 工具链的自定义设置 . . . 117
1.16.6 快速入门（传统 GNU Make） . . . 122

2 API 参考 **147**
2.1 蓝牙 API . . . 147
2.1.1 Controller && VHCI . . . 147
2.1.2 BT COMMON . . . 154
2.1.3 BT LE . . . 160
2.1.4 CLASSIC BT . . . 254
2.1.5 NimBLE-based host APIs . . . 330
2.1.6 ESP-BLE-MESH . . . 332
2.2 连网 API . . . 545
2.2.1 Wi-Fi . . . 545
2.2.2 以太网 . . . 628
2.2.3 IP 网络层协议 . . . 643
2.2.4 应用层协议 . . . 659
2.3 外设 API . . . 659
2.3.1 Analog to Digital Converter . . . 659
2.3.2 Digital To Analog Converter . . . 679
2.3.3 通用定时器 . . . 682
2.3.4 GPIO & RTC GPIO . . . 691
2.3.5 I2C 驱动程序 . . . 709
2.3.6 I2S . . . 722
2.3.7 LED PWM 控制器 . . . 733
2.3.8 MCPWM . . . 746
2.3.9 Pulse Counter . . . 764
2.3.10 RMT . . . 772
2.3.11 SDMMC Host Driver . . . 790
2.3.12 SD SPI Host Driver . . . 794
2.3.13 SDIO Card Slave Driver . . . 798
2.3.14 Sigma-delta Modulation . . . 810
2.3.15 SPI Master Driver . . . 813
2.3.16 SPI Slave Driver . . . 833
2.3.17 ESP32-WROOM-32SE (Secure Element) . . . 840
2.3.18 触摸传感器 . . . 840
2.3.19 TWAI . . . 854
2.3.20 UART . . . 869
2.4 应用层协议 . . . 892
2.4.1 mDNS 服务 . . . 892
2.4.2 ESP-TLS . . . 900
2.4.3 ESP HTTP Client . . . 912
2.4.4 ESP WebSocket Client . . . 926
2.4.5 HTTP 服务器 . . . 933
2.4.6 HTTPS server . . . 954
2.4.7 ICMP Echo . . . 956
2.4.8 ASIO port . . . 961
2.4.9 ESP-MQTT . . . 961
2.4.10 ESP-Modbus . . . 973
2.4.11 ESP Local Control . . . 978
2.4.12 ESP Serial Slave Link . . . 986
2.4.13 ESP x509 Certificate Bundle . . . 1001
2.4.14 IP 网络层协议 . . . 1004
2.5 配网 API . . . 1004
2.5.1 Unified Provisioning . . . 1004

2.5.2 Protocol Communication . . . 1007
2.5.3 Wi-Fi Provisioning . . . 1019
2.6 存储 API . . . 1034
2.6.1 SPI Flash API . . . 1034
2.6.2 SD/SDIO/MMC 驱动程序 . . . 1056
2.6.3 非易失性存储库 . . . 1065
2.6.4 NVS 分区生成程序 . . . 1084
2.6.5 虚拟文件系统组件 . . . 1088
2.6.6 FAT 文件系统 . . . 1099
2.6.7 磨损均衡 API . . . 1103
2.6.8 SPIFFS 文件系统 . . . 1107
2.6.9 量产程序 . . . 1111
2.7 System API . . . 1115
2.7.1 App Image Format . . . 1115
2.7.2 Application Level Tracing . . . 1120
2.7.3 Chip Revision . . . 1124
2.7.4 控制台终端 . . . 1127
2.7.5 eFuse Manager . . . 1135
2.7.6 Error Codes and Helper Functions . . . 1148
2.7.7 ESP HTTPS OTA . . . 1149
2.7.8 ESP-pthread . . . 1153
2.7.9 Event Loop Library . . . 1155
2.7.10 FreeRTOS . . . 1171
2.7.11 FreeRTOS Additions . . . 1264
2.7.12 Heap Memory Allocation . . . 1280
2.7.13 Heap Memory Debugging . . . 1292
2.7.14 High Resolution Timer . . . 1302
2.7.15 The himem allocation API . . . 1307
2.7.16 Inter-Processor Call . . . 1309
2.7.17 Call function with external stack . . . 1311
2.7.18 Interrupt allocation . . . 1312
2.7.19 Logging library . . . 1318
2.7.20 Miscellaneous System APIs . . . 1323
2.7.21 空中升级 (OTA) . . . 1330
2.7.22 Performance Monitor . . . 1339
2.7.23 电源管理 . . . 1342
2.7.24 Sleep Modes . . . 1347
2.7.25 Watchdogs . . . 1356
2.7.26 System Time . . . 1359
2.7.27 Internal and Unstable APIs . . . 1363
2.8 Project Configuration . . . 1364
2.8.1 Introduction . . . 1364
2.8.2 Project Configuration Menu . . . 1364
2.8.3 Using sdkconfig.defaults . . . 1364
2.8.4 Kconfig Formatting Rules . . . 1365
2.8.5 Backward Compatibility of Kconfig Options . . . 1365
2.8.6 Configuration Options Reference . . . 1365
2.8.7 Customisations . . . 1607
2.9 Error Codes Reference . . . 1607

3 ESP32 H/W 硬件参考 1613
3.1 ESP32 系列模组和开发板 . . . 1613
3.1.1 模组 . . . 1613
3.1.2 ESP32 开发板 . . . 1616
3.1.3 相关文档 . . . 1619
3.2 ESP32 模组与开发板（历史版本） . . . 1619
3.2.1 模组 . . . 1619
3.2.2 开发板 . . . 1619

3.2.3 相关文档 . . . 1624
3.3 Chip Series Comparison . . . 1625
3.3.1 Related Documents . . . 1627

4 API 指南 1629
4.1 应用层跟踪库 . . . 1629
4.1.1 概述 . . . 1629
4.1.2 运行模式 . . . 1629
4.1.3 配置选项与依赖项 . . . 1629
4.1.4 如何使用这个库 . . . 1630
4.2 应用程序的启动流程 . . . 1636
4.2.1 一级引导程序 . . . 1637
4.2.2 二级引导程序 . . . 1637
4.2.3 应用程序启动阶段 . . . 1637
4.3 BluFi . . . 1638
4.3.1 概览 . . . 1638
4.3.2 BluFi 流程 . . . 1638
4.3.3 ESP32 配网流程 . . . 1638
4.3.4 配网流程图 . . . 1639
4.3.5 BluFi 传输格式 . . . 1639
4.3.6 ESP32 端的安全实现 . . . 1643
4.3.7 GATT 相关说明 . . . 1644
4.4 引导加载程序（Bootloader） . . . 1644
4.4.1 引导加载程序兼容性 . . . 1644
4.4.2 恢复出厂设置 . . . 1645
4.4.3 从测试应用程序分区启动 . . . 1645
4.4.4 从深度睡眠中快速启动 . . . 1645
4.4.5 自定义引导程序 . . . 1646
4.5 构建系统（CMake 版） . . . 1646
4.5.1 概述 . . . 1646
4.5.2 使用构建系统 . . . 1647
4.5.3 示例项目 . . . 1650
4.5.4 项目 CMakeLists 文件 . . . 1651
4.5.5 组件 CMakeLists 文件 . . . 1652
4.5.6 组件配置 . . . 1654
4.5.7 预处理器定义 . . . 1654
4.5.8 组件依赖 . . . 1654
4.5.9 组件 CMakeLists 示例 . . . 1658
4.5.10 自定义 sdkconfig 的默认值 . . . 1662
4.5.11 Flash 参数 . . . 1662
4.5.12 构建 Bootloader . . . 1662
4.5.13 选择目标芯片 . . . 1663
4.5.14 编写纯 CMake 组件 . . . 1663
4.5.15 组件中使用第三方 CMake 项目 . . . 1664
4.5.16 组件中使用预建库 . . . 1664
4.5.17 在自定义 CMake 项目中使用 ESP-IDF . . . 1665
4.5.18 ESP-IDF CMake 构建系统 API . . . 1665
4.5.19 文件通配 & 增量构建 . . . 1669
4.5.20 构建系统的元数据 . . . 1669
4.5.21 构建系统内部 . . . 1670
4.5.22 从 ESP-IDF GNU Make 构建系统迁移到 CMake 构建系统 . . . 1671
4.6 构建系统 (传统 GNU Make) . . . 1673
4.6.1 使用构建系统 . . . 1673
4.6.2 概述 . . . 1673
4.6.3 代码和数据的存放 . . . 1682
4.6.4 构建 Bootloader . . . 1683
4.7 Deep Sleep Wake Stubs . . . 1683
4.7.1 Rules for Wake Stubs . . . 1683

4.7.2 Implementing A Stub . . . 1683
4.7.3 Loading Code Into RTC Memory . . . 1684
4.7.4 Loading Data Into RTC Memory . . . 1684
4.7.5 CRC Check For Wake Stubs . . . 1685
4.8 错误处理 . . . 1685
4.8.1 概述 . . . 1685
4.8.2 错误码 . . . 1685
4.8.3 错误码到错误消息 . . . 1685
4.8.4 ESP_ERROR_CHECK 宏 . . . 1686
4.8.5 错误处理模式 . . . 1686
4.8.6 C++ 异常 . . . 1687
4.9 ESP-BLE-MESH . . . 1687
4.9.1 概述 . . . 1687
4.9.2 ESP-BLE-MESH 快速入门 . . . 1687
4.9.3 ESP-BLE-MESH 示例 . . . 1692
4.9.4 ESP-BLE-MESH 演示视频 . . . 1695
4.9.5 ESP-BLE-MESH 常见问题手册 . . . 1695
4.9.6 相关文档 . . . 1695
4.10 ESP-MESH . . . 1721
4.10.1 概述 . . . 1721
4.10.2 简介 . . . 1722
4.10.3 ESP-MESH 概念 . . . 1723
4.10.4 建立网络 . . . 1727
4.10.5 管理网络 . . . 1732
4.10.6 数据传输 . . . 1734
4.10.7 信道切换 . . . 1737
4.10.8 性能 . . . 1739
4.10.9 更多注意事项 . . . 1740
4.11 Core Dump . . . 1740
4.11.1 Overview . . . 1740
4.11.2 Configurations . . . 1740
4.11.3 Save core dump to flash . . . 1741
4.11.4 Print core dump to UART . . . 1741
4.11.5 ROM Functions in Backtraces . . . 1741
4.11.6 Dumping variables on demand . . . 1742
4.11.7 Running espcoredump.py . . . 1742
4.12 Event Handling . . . 1743
4.12.1 Wi-Fi, Ethernet, and IP Events . . . 1743
4.12.2 Mesh Events . . . 1744
4.12.3 Bluetooth Events . . . 1745
4.13 片外 RAM . . . 1745
4.13.1 简介 . . . 1745
4.13.2 硬件 . . . 1745
4.13.3 配置片外 RAM . . . 1745
4.13.4 片外 RAM 使用限制 . . . 1747
4.13.5 Chip revisions . . . 1747
4.14 严重错误 . . . 1748
4.14.1 概述 . . . 1748
4.14.2 紧急处理程序 . . . 1748
4.14.3 寄存器转储与回溯 . . . 1749
4.14.4 GDB Stub . . . 1750
4.14.5 Guru Meditation 错误 . . . 1751
4.14.6 其它严重错误 . . . 1752
4.15 Flash 加密 . . . 1753
4.15.1 概述 . . . 1753
4.15.2 Flash 加密过程中使用的 eFuse . . . 1754
4.15.3 Flash 的加密过程 . . . 1754
4.15.4 设置 Flash 加密的步骤 . . . 1755

4.15.5 Flash 加密的要点 . . . 1761
4.15.6 使用加密的 Flash . . . 1761
4.15.7 更新加密的 Flash . . . 1762
4.15.8 关闭 Flash 加密 . . . 1762
4.15.9 Flash 加密的局限性 . . . 1763
4.15.10 Flash 加密与安全启动 . . . 1763
4.15.11 使用无安全启动的 Flash 加密 . . . 1763
4.15.12 Flash 加密的高级功能 . . . 1763
4.15.13 技术细节 . . . 1764
4.16 ESP-IDF FreeRTOS SMP Changes . . . 1765
4.16.1 Overview . . . 1765
4.16.2 Tasks and Task Creation . . . 1766
4.16.3 Scheduling . . . 1766
4.16.4 Critical Sections & Disabling Interrupts . . . 1769
4.16.5 Floating Point Arithmetic . . . 1769
4.16.6 Task Deletion . . . 1770
4.16.7 Thread Local Storage Pointers & Deletion Callbacks . . . 1770
4.16.8 Configuring ESP-IDF FreeRTOS . . . 1770
4.17 Hardware Abstraction . . . 1771
4.17.1 Architecture . . . 1771
4.17.2 LL (Low Level) Layer . . . 1772
4.17.3 HAL (Hardware Abstraction Layer) . . . 1773
4.18 High-Level Interrupts . . . 1774
4.18.1 Interrupt Levels . . . 1774
4.18.2 Notes . . . 1774
4.19 JTAG 调试 . . . 1775
4.19.1 引言 . . . 1775
4.19.2 工作原理 . . . 1776
4.19.3 选择 JTAG 适配器 . . . 1776
4.19.4 安装 OpenOCD . . . 1777
4.19.5 配置 ESP32 目标板 . . . 1777
4.19.6 启动调试器 . . . 1782
4.19.7 调试范例 . . . 1782
4.19.8 从源码构建 OpenOCD . . . 1782
4.19.9 注意事项和补充内容 . . . 1786
4.19.10 相关文档 . . . 1790
4.20 链接脚本生成机制 . . . 1815
4.20.1 概述 . . . 1815
4.20.2 快速上手 . . . 1815
4.20.3 链接脚本生成机制内核 . . . 1818
4.21 lwIP . . . 1823
4.21.1 Supported APIs . . . 1823
4.21.2 BSD Sockets API . . . 1823
4.21.3 Netconn API . . . 1827
4.21.4 lwIP FreeRTOS Task . . . 1827
4.21.5 esp-lwip custom modifications . . . 1828
4.21.6 Performance Optimization . . . 1829
4.22 应用程序的内存布局 . . . 1830
4.22.1 IRAM（指令 RAM） . . . 1830
4.22.2 IROM（代码从 Flash 中运行） . . . 1831
4.22.3 RTC 快速内存 . . . 1831
4.22.4 DRAM（数据 RAM） . . . 1831
4.22.5 DROM（数据存储在 Flash 中） . . . 1831
4.22.6 RTC 慢速内存 . . . 1831
4.23 DMA 能力要求 . . . 1832
4.24 分区表 . . . 1832
4.24.1 概述 . . . 1832
4.24.2 内置分区表 . . . 1833

4.24.3 创建自定义分区表 . . . 1833
4.24.4 生成二进制分区表 . . . 1835
4.24.5 烧写分区表 . . . 1836
4.24.6 分区工具 (parttool.py) . . . 1836
4.25 ESP32 ROM console . . . 1838
4.25.1 Full list of supported statements and functions . . . 1838
4.25.2 Example programs . . . 1839
4.25.3 Credits . . . 1839
4.26 RF calibration . . . 1839
4.26.1 Partial calibration . . . 1839
4.26.2 Full calibration . . . 1840
4.26.3 No calibration . . . 1840
4.26.4 PHY initialization data . . . 1840
4.27 Secure Boot . . . 1840
4.27.1 Background . . . 1841
4.27.2 Secure Boot Process Overview . . . 1841
4.27.3 Keys . . . 1841
4.27.4 Bootloader Size . . . 1842
4.27.5 How To Enable Secure Boot . . . 1842
4.27.6 Re-Flashable Software Bootloader . . . 1843
4.27.7 Generating Secure Boot Signing Key . . . 1843
4.27.8 Remote Signing of Images . . . 1844
4.27.9 Secure Boot Best Practices . . . 1844
4.27.10 Technical Details . . . 1844
4.27.11 Secure Boot & Flash Encryption . . . 1846
4.27.12 Signed App Verification Without Hardware Secure Boot . . . 1846
4.27.13 Advanced Features . . . 1846
4.28 Secure Boot V2 . . . 1847
4.28.1 Background . . . 1847
4.28.2 Advantages . . . 1847
4.28.3 Secure Boot V2 Process . . . 1847
4.28.4 Signature Block Format . . . 1848
4.28.5 Verifying the signature Block . . . 1848
4.28.6 Bootloader Size . . . 1848
4.28.7 eFuse usage . . . 1848
4.28.8 How To Enable Secure Boot V2 . . . 1849
4.28.9 Restrictions after Secure Boot is enabled . . . 1850
4.28.10 Generating Secure Boot Signing Key . . . 1850
4.28.11 Remote Signing of Images . . . 1850
4.28.12 Secure Boot Best Practices . . . 1850
4.28.13 Technical Details . . . 1851
4.28.14 Secure Boot & Flash Encryption . . . 1851
4.28.15 Signed App Verification Without Hardware Secure Boot . . . 1851
4.28.16 Advanced Features . . . 1852
4.29 Thread Local Storage . . . 1852
4.29.1 Overview . . . 1852
4.29.2 FreeRTOS Native API . . . 1852
4.29.3 Pthread API . . . 1852
4.29.4 C11 Standard . . . 1853
4.30 工具 . . . 1853
4.30.1 Downloadable Tools . . . 1853
4.30.2 IDF Docker Image . . . 1861
4.30.3 IDF Windows Installer . . . 1863
4.30.4 IDF Component Manager . . . 1864
4.31 ULP 协处理器编程 . . . 1865
4.31.1 ESP32 ULP coprocessor instruction set . . . 1865
4.31.2 Programming ULP coprocessor using C macros (legacy) . . . 1878
4.31.3 安装工具链 . . . 1883

4.31.4 编译 ULP 代码 . . . 1883
4.31.5 访问 ULP 程序变量 . . . 1884
4.31.6 启动 ULP 程序 . . . 1885
4.31.7 ESP32 ULP 程序流 . . . 1886
4.32 ULP 协处理器 (传统的 GNU Make) . . . 1886
4.32.1 安装工具链 . . . 1887
4.32.2 编译 ULP 代码 . . . 1887
4.32.3 访问 ULP 程序变量 . . . 1887
4.32.4 启动 ULP 程序 . . . 1888
4.32.5 ULP 程序流 . . . 1889
4.33 ESP32 中的单元测试 . . . 1890
4.33.1 添加常规测试用例 . . . 1890
4.33.2 添加多设备测试用例 . . . 1891
4.33.3 添加多阶段测试用例 . . . 1892
4.33.4 应用于不同芯片的单元测试 . . . 1892
4.33.5 编译单元测试程序 . . . 1893
4.33.6 运行单元测试 . . . 1893
4.34 单元测试（传统的 GNU Make） . . . 1894
4.34.1 添加常规测试用例 . . . 1895
4.34.2 添加多设备测试用例 . . . 1895
4.34.3 添加多阶段测试用例 . . . 1896
4.34.4 编译单元测试程序 . . . 1897
4.34.5 运行单元测试 . . . 1897
4.35 Wi-Fi 驱动程序 . . . 1898
4.35.1 ESP32 Wi-Fi 功能列表 . . . 1898
4.35.2 如何编写 Wi-Fi 应用程序 . . . 1898
4.35.3 ESP32 Wi-Fi API 错误代码 . . . 1899
4.35.4 初始化 ESP32 Wi-Fi API 参数 . . . 1899
4.35.5 ESP32 Wi-Fi 编程模型 . . . 1900
4.35.6 ESP32 Wi-Fi 事件描述 . . . 1900
4.35.7 ESP32 Wi-Fi station 一般情况 . . . 1903
4.35.8 ESP32 Wi-Fi AP 一般情况 . . . 1905
4.35.9 ESP32 Wi-Fi 扫描 . . . 1907
4.35.10 ESP32 Wi-Fi station 连接场景 . . . 1912
4.35.11 找到多个 AP 时的 ESP32 Wi-Fi station 连接 . . . 1918
4.35.12 Wi-Fi 重新连接 . . . 1918
4.35.13 Wi-Fi beacon 超时 . . . 1918
4.35.14 ESP32 Wi-Fi 配置 . . . 1918
4.35.15 Wi-Fi Easy Connect™ (DPP) . . . 1923
4.35.16 无线网络管理 . . . 1924
4.35.17 无线资源管理 . . . 1924
4.35.18 ESP32 Wi-Fi 节能模式 . . . 1924
4.35.19 ESP32 Wi-Fi 吞吐量 . . . 1925
4.35.20 Wi-Fi 80211 数据包发送 . . . 1925
4.35.21 Wi-Fi Sniffer 模式 . . . 1927
4.35.22 Wi-Fi 多根天线 . . . 1927
4.35.23 Wi-Fi 信道状态信息 . . . 1928
4.35.24 Wi-Fi 信道状态信息配置 . . . 1929
4.35.25 Wi-Fi HT20/40 . . . 1930
4.35.26 Wi-Fi QoS . . . 1930
4.35.27 Wi-Fi AMSDU . . . 1931
4.35.28 Wi-Fi 分片 . . . 1931
4.35.29 WPS 注册 . . . 1931
4.35.30 Wi-Fi 缓冲区使用情况 . . . 1931
4.35.31 如何提高 Wi-Fi 性能 . . . 1932
4.35.32 Wi-Fi Menuconfig . . . 1935
4.35.33 故障排除 . . . 1938
4.36 Wi-Fi Security . . . 1943

4.36.1 ESP32 Wi-Fi Security Features . . . 1943
4.36.2 Protected Management Frames (PMF) . . . 1943
4.36.3 WPA3-Personal . . . 1944

5 Libraries and Frameworks 1947
5.1 Cloud Frameworks . . . 1947
5.1.1 AWS IoT . . . 1947
5.1.2 Azure IoT . . . 1947
5.1.3 Google IoT Core . . . 1947
5.1.4 Aliyun IoT . . . 1947
5.1.5 Joylink IoT . . . 1947
5.1.6 Tencent IoT . . . 1947
5.1.7 Tencentyun IoT . . . 1948
5.1.8 Baidu IoT . . . 1948

6 Contributions Guide 1949
6.1 How to Contribute . . . 1949
6.2 Before Contributing . . . 1949
6.3 Pull Request Process . . . 1949
6.4 Legal Part . . . 1950
6.5 Related Documents . . . 1950
6.5.1 Espressif IoT Development Framework Style Guide . . . 1950
6.5.2 Install pre-commit Hook for ESP-IDF Project . . . 1956
6.5.3 编写代码文档 . . . 1957
6.5.4 文档的附加工具和扩展功能指南 . . . 1966
6.5.5 创建示例项目 . . . 1969
6.5.6 API Documentation Template . . . 1970
6.5.7 Contributor Agreement . . . 1972

7 ESP-IDF 版本简介 1975
7.1 发布版本 . . . 1975
7.2 我该选择哪个版本? . . . 1975
7.3 版本管理 . . . 1975
7.4 支持期限 . . . 1976
7.5 查看当前版本 . . . 1977
7.6 Git 工作流 . . . 1978
7.7 更新 ESP-IDF . . . 1978
7.7.1 更新至一个稳定发布版本 . . . 1978
7.7.2 更新至一个预发布版本 . . . 1979
7.7.3 更新至 master 分支 . . . 1979
7.7.4 更新至一个发布分支 . . . 1979

8 资源 1981
8.1 PlatformIO . . . 1981
8.1.1 What is PlatformIO? . . . 1981
8.1.2 Installation . . . 1981
8.1.3 Configuration . . . 1982
8.1.4 Tutorials . . . 1982
8.1.5 Project Examples . . . 1982
8.1.6 Next Steps . . . 1982
8.2 有用的链接 . . . 1982

9 Copyrights and Licenses 1983
9.1 Software Copyrights . . . 1983
9.1.1 Firmware Components . . . 1983
9.1.2 Build Tools . . . 1984
9.1.3 Documentation . . . 1984
9.2 ROM Source Code Copyrights . . . 1984
9.3 Xtensa libhal MIT License . . . 1985

9.4 TinyBasic Plus MIT License 1985
9.5 TJpgDec License 1985

10 关于本指南 **1987**

11 切换语言 **1989**

索引 **1991**

索引 **1991**

这里是乐鑫 IoT 开发框架 (esp-idf) 的文档中心。ESP-IDF 是 ESP32、ESP32-S 和 ESP32-C 系列芯片的官方开发框架。

本文档仅包含针对 ESP32 芯片的 ESP-IDF 使用。

<table>
<tr><td> 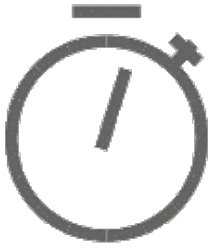 </td><td> 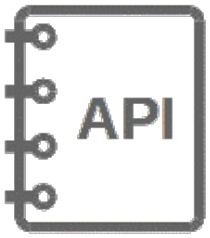
</td><td>
</td></tr>
<tr><td>快速入门</td><td>API 参考</td><td>H/W 参考</td></tr>
<tr><td> 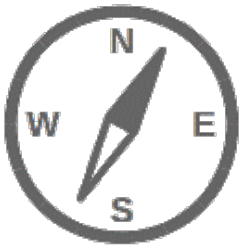
</td><td> 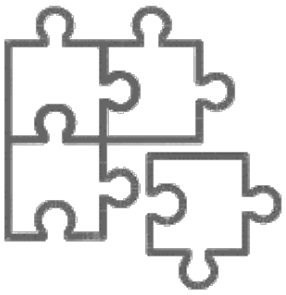 </td><td> 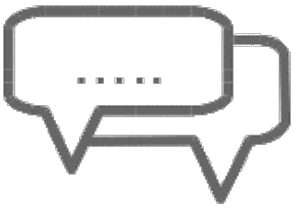 </td></tr>
<tr><td>API 指南</td><td>贡献代码</td><td>相关资源</td></tr>
</table>

Chapter 1

快速入门

本文档旨在指导用户搭建 ESP32 硬件开发的软件环境，通过一个简单的示例展示如何使用 ESP-IDF (Espressif IoT Development Framework) 配置菜单，并编译、下载固件至 ESP32 开发板等步骤。

注解： 这是 ESP-IDF 稳定版本 v4.3.6 的文档，还有其他版本的文档*ESP-IDF 版本简介* 供参考。

1.1 概述

ESP32 SoC 芯片支持以下功能：

- 2.4 GHz Wi-Fi
- 蓝牙
- 高性能 Xtensa® 32 位 LX6 双核处理器
- 超低功耗协处理器
- 多种外设

ESP32 采用 40 nm 工艺制成，具有最佳的功耗性能、射频性能、稳定性、通用性和可靠性，适用于各种应用场景和不同功耗需求。

乐鑫为用户提供完整的软、硬件资源，进行 ESP32 硬件设备的开发。其中，乐鑫的软件开发环境 ESP-IDF 旨在协助用户快速开发物联网 (IoT) 应用，可满足用户对 Wi-Fi、蓝牙、低功耗等方面的要求。

1.2 准备工作

硬件：

- 一款 **ESP32** 开发板
- **USB 数据线** (A 转 Micro-B)
- 电脑（Windows、Linux 或 Mac OS）

软件：

您可以选择下载并手动安装以下软件：

- 设置 **工具链**，用于编译 ESP32 代码；
- **编译构建工具**——CMake 和 Ninja 编译构建工具，用于编译 ESP32 **应用程序**；
- 获取 **ESP-IDF** 软件开发框架。该框架已经基本包含 ESP32 使用的 API（软件库和源代码）和运行 **工具链**的脚本；

或者，您也可以通过以下集成开发环境 (IDE) 中的官方插件完成安装流程：

- Eclipse 插件 (安装)

- VS Code 插件 (安装)

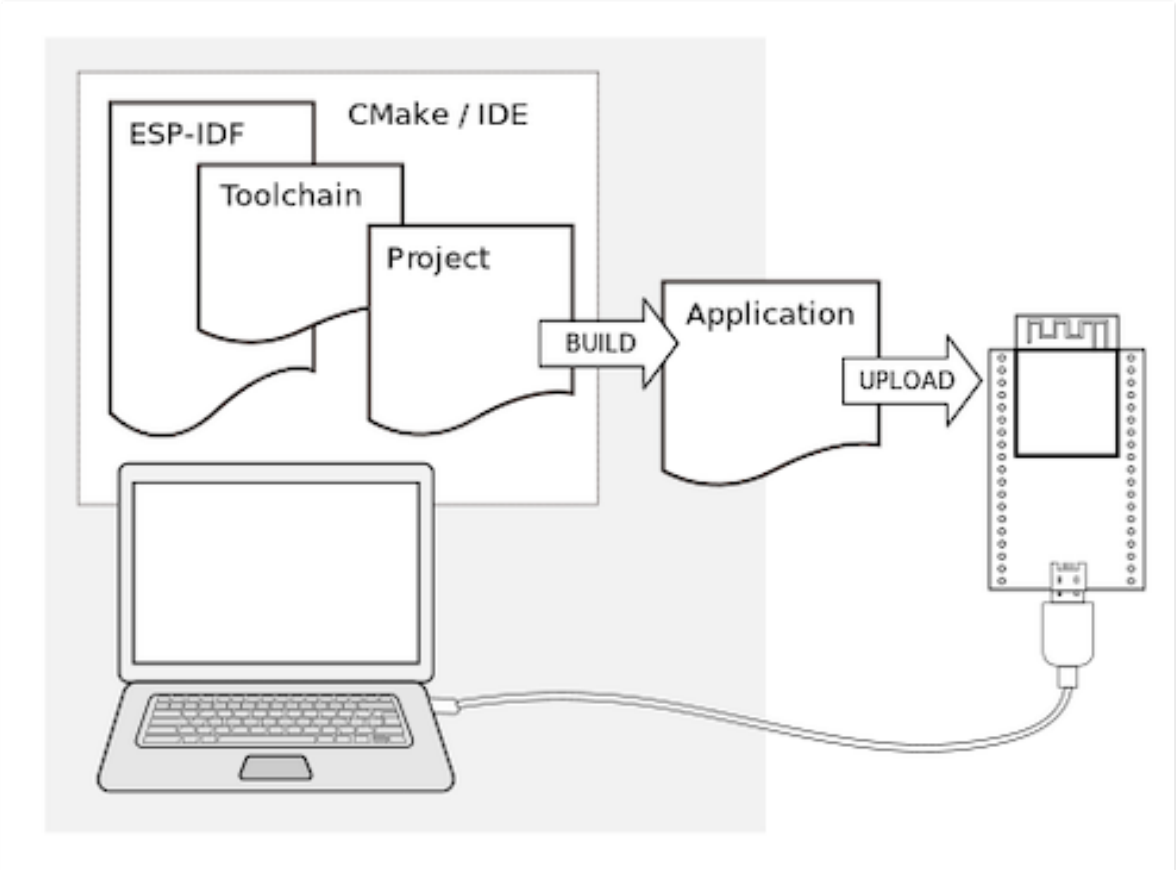

图 1: ESP32 应用程序开发

1.3 开发板简介

请点击下方连接，了解有关开发板的详细信息。

1.3.1 ESP32-DevKitC V4 入门指南

本指南介绍了如何开始使用 ESP32-DevKitC V4 开发板。有关 ESP32-DevKitC 其他版本的介绍，请见：*ESP32 H/W 硬件参考*。

准备工作

- *ESP32-DevKitC V4 开发板*
- USB A / micro USB B 数据线
- PC（Windows、Linux 或 macOS）

您可以跳过介绍部分，直接前往*应用程序开发* 章节。

概述

ESP32-DevKitC V4 是 乐鑫 一款基于 ESP32 的小型开发板，板上模组的绝大部分管脚均已引出，开发人员可根据实际需求，轻松通过跳线连接多种外围器件，或将开发板插在面包板上使用。

为了更好地满足不同用户需求，ESP32-DevKitC V4 还支持以下不同配置：

- 可选多款 ESP32 模组
  - ESP32-WROOM-32E
  - ESP32-WROOM-32UE
  - ESP32-WROOM-32D
  - ESP32-WROOM-32U
  - ESP32-SOLO-1
  - ESP32-WROVER-E
  - ESP32-WROVER-IE
- 可选排针或排母

详情请见 乐鑫产品选型工具。

功能说明

ESP32-DevKitC V4 开发板的主要组件、接口及控制方式见下。

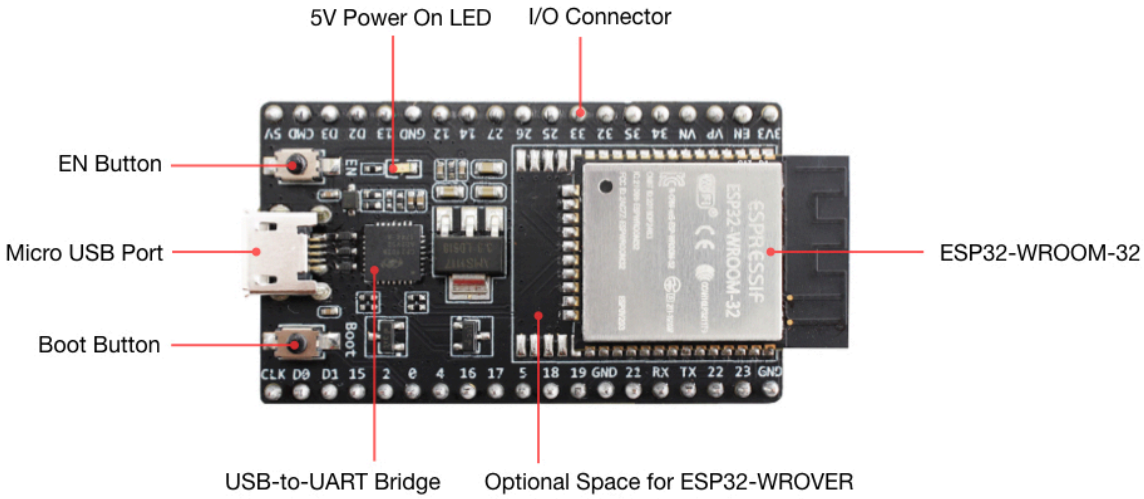

ESP32-DevKitC V4（板载 ESP32-WROOM-32）

主要组件	基本介绍
ESP32-WROOM-32	基于 ESP32 的模组。更多详情，请见 《ESP32-WROOM-32 技术规格书》 。
EN	复位按键。
Boot	下载按键。按下 **Boot** 键并保持，同时按一下 **EN** 键（此时不要松开 **Boot** 键）进入“固件下载”模式，通过串口下载固件。
USB-to-UART 桥接器	单芯片 USB-UART 桥接器，可提供高达 3 Mbps 的传输速率。	Micro USB 端口
USB 接口。	可用作电路板的供电电源，或连接 PC 和 ESP32-WROOM-32 模组的通信接口。
5V Power On LED	开发板通电后（USB 或外部 5 V），该指示灯将亮起。更多信息，请见相关文档 中的原理图。
I/O	板上模组的绝大部分管脚均已引出至开发板的排针。用户可以对 ESP32 进行编程，实现 PWM、ADC、DAC、I2C、I2S、SPI 等多种功能。

注解： 管脚 D0、D1、D2、D3、CMD 和 CLK 用于 ESP32 芯片与 SPI flash 间的内部通信，集中分布在开发板两侧靠近 USB 端口的位置。通常而言，这些管脚最好不连，否则可能影响 SPI flash / SPI RAM 的工作。

注解： 管脚 GPIO16 和 GPIO17 仅适用于板载 ESP32-WROOM 系列和 ESP32-SOLO-1 的开发板，板载 ESP32-WROVER 系列开发板的管脚 GPIO16 和 GPIO17 保留内部使用。

电源选项

开发板可从以下三种供电方式中任选其一：

- Micro USB 供电（默认）
- 5V / GND 管脚供电
- 3V3 / GND 管脚供电

警告： 上述供电模式 **不可同时连接**，否则可能会损坏开发板和/或电源。

有关 C15 的提示

较早版本 ESP32-DevKitC 开发板上的 C15 可能存在以下问题：

- 开发板上电后可能进入下载模式；
- 如果用户通过 GPIO0 输出时钟，C15 可能会影响信号。

用户如果认为 C15 可能影响开发板的使用，则可以将 C15 完全移除。C15 在开发板上的具体位置见下图黄色部分。

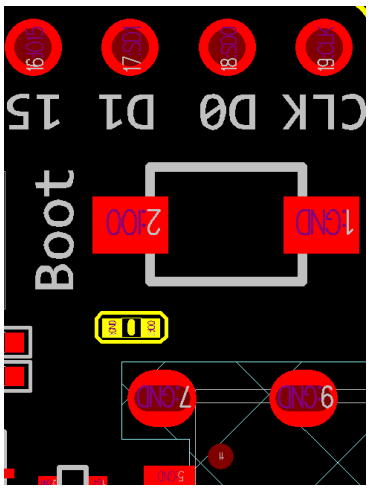

C15（黄色）在 ESP32-DevKitC V4 开发板上的位置

应用程序开发

ESP32-DevKitC V4 上电前，请首先确认开发板完好无损。

现在，请前往快速入门 中的详细安装步骤 章节，查看如何设置开发环境，并尝试将示例项目烧录至您的开发板。

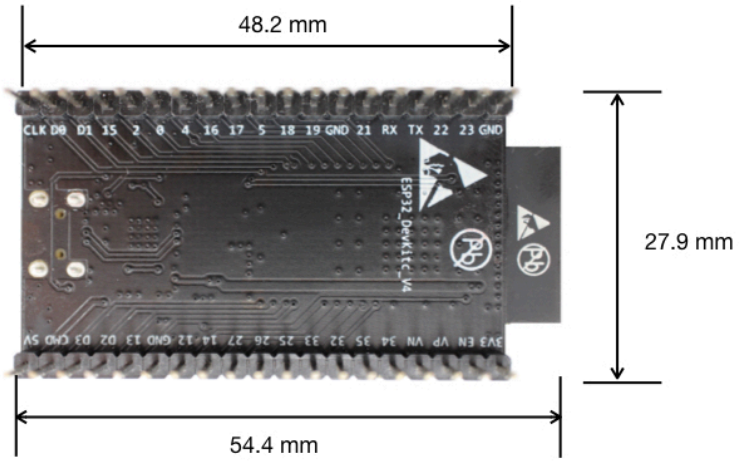

开发板尺寸

ESP32-DevKitC 开发板尺寸–仰视图

相关文档

- ESP32-DevKitC V4 原理图 (PDF)
- 《ESP32 技术规格书》 (PDF)
- 《ESP32-WROOM-32 技术规格书》 (PDF)
- 《ESP32-WROOM-32D & ESP32-WROOM-32U 技术规格书》 (PDF)
- 《ESP32-WROOM-DA 技术规格书》 (PDF)
- 《ESP32-WROVER 技术规格书》 (PDF)
- 《ESP32-WROVER-B 技术规格书》 (PDF)
- 乐鑫产品选型工具

ESP32-DevKitC V2 入门指南 本指南介绍了如何开始使用 ESP32-DevKitC V2 开发板。

准备工作

- *ESP32-DevKitC V2* 开发板
- USB A / micro USB B 数据线
- PC（Windows、Linux 或 Mac OS）

您可以跳过介绍部分，直接前往*应用程序开发* 章节。

概述 ESP32-DevKitC V2 是 乐鑫 一款基于 ESP32 的小型开发板，板上模组的绝大部分管脚均已引出，开发人员可根据实际需求，轻松通过跳线连接多种外围器件，或将开发板插在面包板上使用。

功能说明 ESP32-DevKitC V2 开发板的主要组件、接口及控制方式见下。

ESP32-DevKitC V2 开发板

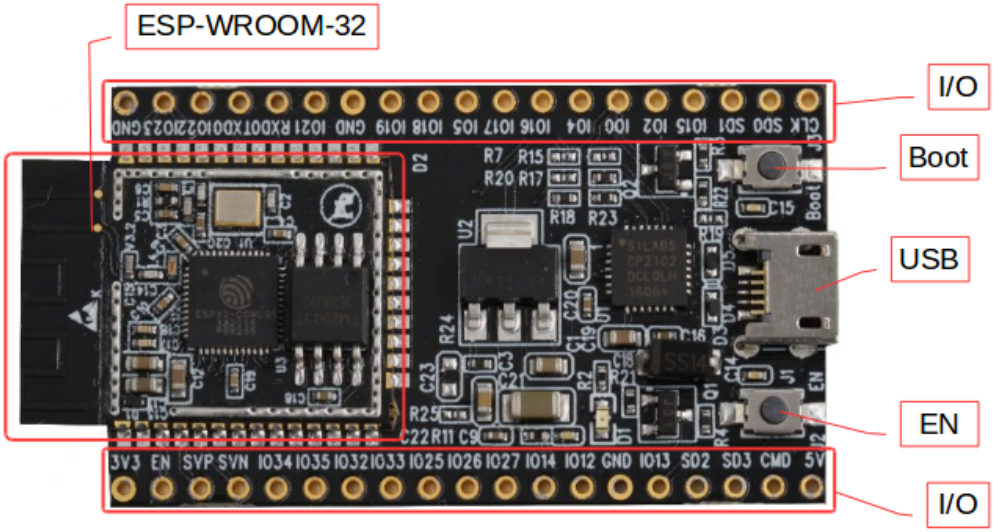

主要组件	基本介绍
ESP32-WROOM-32	基于 ESP32 的模组。更多详情，请见 《ESP32-WROOM-32 技术规格书》 。
EN	复位按键。
Boot	下载按键。按下 **Boot** 键并保持，同时按一下 **EN** 键（此时不要松开 **Boot** 键）进入“固件下载”模式，通过串口下载固件。
Micro USB 端口	USB 接口。可用作电路板的供电电源，或连接 PC 和 ESP32-WROOM-32 模组的通信接口。
I/O	板上模组的绝大部分管脚均已引出至开发板的排针。用户可以对 ESP32 进行编程，实现 PWM、ADC、DAC、I2C、I2S、SPI 等多种功能。

电源选项 开发板可从以下三种供电方式中任选其一：

- Micro USB 供电（默认）
- 5V / GND 管脚供电
- 3V3 / GND 管脚供电

警告： 上述供电模式 **不可同时连接**，否则可能会损坏开发板和/或电源。

应用程序开发 ESP32-DevKitC V2 上电前，请首先确认开发板完好无损。

现在，请前往快速入门 中的详细安装步骤 章节，查看如何设置开发环境，并尝试将示例项目烧录至您的开发板。

相关文档

- ESP32-DevKitC 原理图 (PDF)
- 《ESP32 技术规格书》 (PDF)
- 《ESP32-WROOM-32 技术规格书》 (PDF)

1.3.2 ESP-WROVER-KIT V4.1 入门指南

本指南介绍了如何开始使用 ESP-WROVER-KIT V4.1 开发板及其功能和相关配置。有关 ESP-WROVER-KIT 其他版本的介绍，请见：*ESP32 H/W 硬件参考*。

准备工作

- *ESP-WROVER-KIT V4.1 开发板*
- USB 2.0 数据线（A 转 Micro-B）
- PC（Windows、Linux 或 Mac OS）

您可以跳过介绍部分，直接前往*应用程序开发* 章节。

概述

ESP-WROVER-KIT 是 乐鑫 一款基于 ESP32 的开发板。

ESP-WROVER-KIT 开发板已集成了如下组件：

- ESP32-WROVER-B 模组
- LCD 屏
- MicroSD 卡槽

此外，ESP-WROVER-KIT 的独特之处在于集成了一款先进多协议 USB 桥接器 (FTDI FT2232HL)，允许开发人员直接通过 USB 接口，使用 JTAG 对 ESP32 进行调试，无需额外的 JTAG 调试器。ESP-WROVER-KIT 可为开发人员提供简单、便捷且极具成本效益的开发体验。

为了便于使用，板上模组的绝大部分管脚均已引出至开发板的引脚。

注解： ESP32 的 GPIO16 和 GPIO17 管脚用作 PSRAM 的片选和时钟信号。默认情况下，为了给用户提供可靠的性能，这两个 GPIO 管脚不引出至开发板引脚。

功能概述

ESP-WROVER-KIT 开发板的主要组件和连接方式如下图所示。

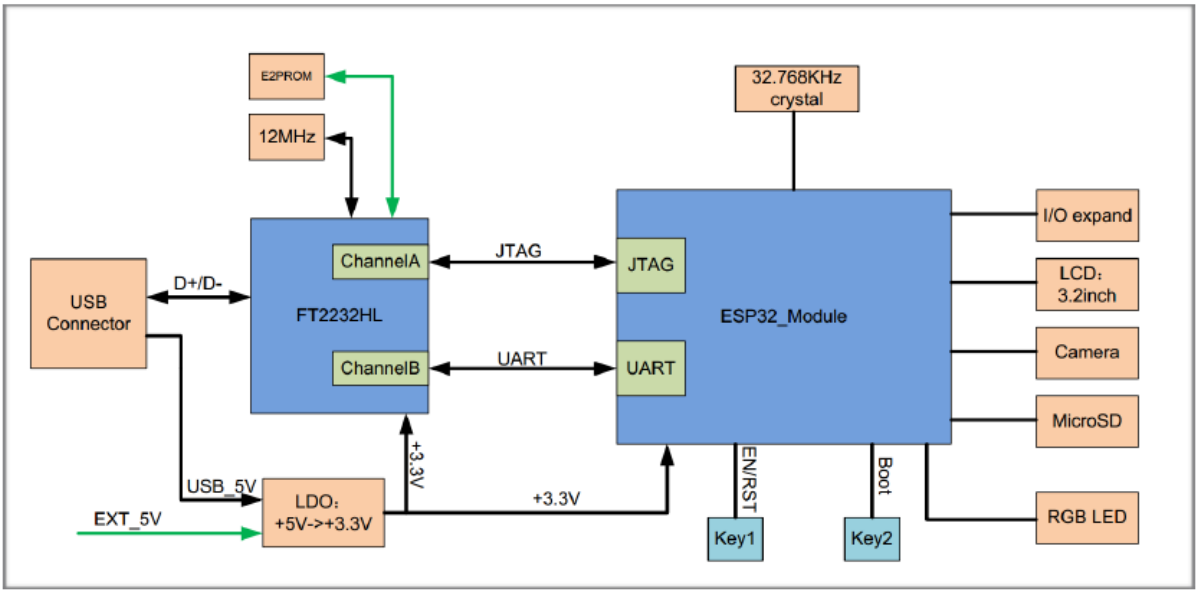

图 2: ESP-WROVER-KIT 功能框图

功能说明

ESP-WROVER-KIT 开发板的主要组件、接口及控制方式见下。

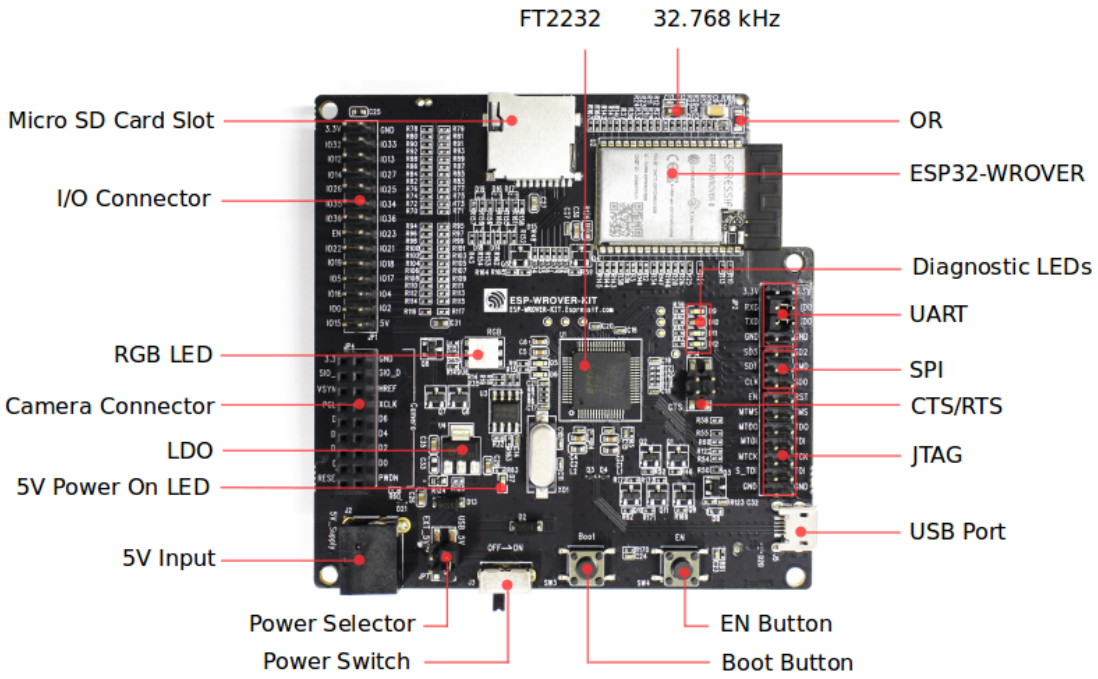

图 3: ESP-WROVER-KIT 开发板布局–俯视图

下表将从图片右上角开始，以顺时针顺序介绍图 1 中的主要组件，然后按同样顺序介绍图 2 中的主要组件。

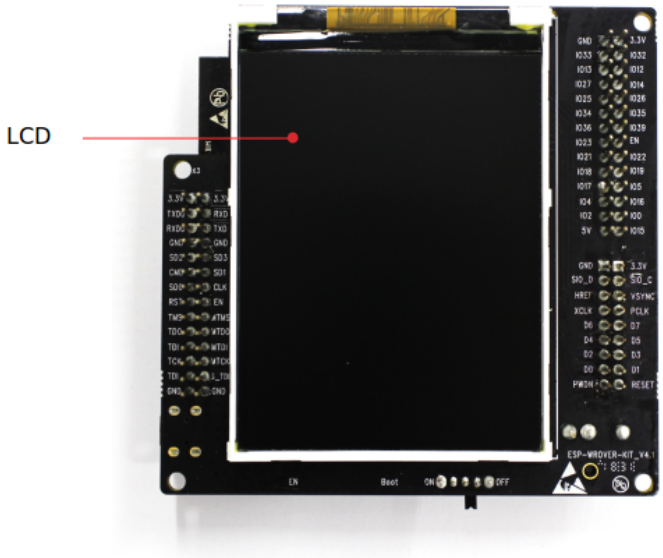

图 4: ESP-WROVER-KIT 开发板布局–仰视图

主要组件	基本介绍
FT2232	FT2232 多协议 USB 转串口桥接器。开发人员可通过 USB 接口对 FT2232 芯片进行控制和编程，与 ESP32 建立连接。FT2232 芯片可在通道 A 提供 USB-to-JTAG 接口功能，并在通道 B 提供 USB-to-Serial 接口功能，便利开发人员的应用开发与调试。详见 ESP-WROVER-KIT V4.1 原理图。
32.768 kHz	32.768 kHz 晶振，可提供 Deep-sleep 下使用的低功耗时钟。
0 欧电阻	ESP-WROVER-KIT 开发板设计了一个 0 欧电阻，可在测量 ESP32 系列模组在不同功耗模式下的电流时，直接移除或替换为分流器。
ESP32-WROVER-B 模组	这款 ESP32 模组内置 64-Mbit PSRAM，可提供灵活的额外存储空间和数据处理能力。
诊断 LED 信号灯	本开发板 FT2232 芯片的 GPIO 管脚连接了 4 个红色 LED 信号灯，以备后用。
UART	串口。FT2232 和 ESP32 的串行 TX/RX 信号已引出至 JP2 的两端。默认情况下，这两路信号由跳线帽连接。如果仅需使用 ESP32 模组串口，则可移除相关跳线帽，将模组连接至其他外部串口设备。
SPI	默认情况下，ESP32 使用 SPI 接口访问内置 flash 和 PSRAM。使用这些引脚连接 ESP32 和其他 SPI 设备。这种情况下，需增加额外的片选 (CS) 信号。注意，本接口的工作电压为 3.3 V。
CTS/RTS	串口流控信号。管脚默认不连接至电路。为了使能该功能，必须用跳线帽断路掉 JP14 的相应管脚。
JTAG	JTAG 接口。FT2232 和 ESP32 的 JTAG 信号已引出至 JP2 的两端。默认情况下，这两路信号不连接。如需使能 JTAG，请按照设置选项 的介绍，连接跳线帽。
USB 端口	USB 接口。可用作开发板的供电电源，或连接 PC 和开发板的通信接口。
EN	复位按键。
BOOT 按键	下载按键。按下 **Boot** 键并保持，同时按一下 **EN** 键（此时不要松开 **Boot** 键）进入“固件下载”模式，通过串口下载固件。
电源开关	电源开关。拨向 **Boot** 按键一侧，开发板上电；拨离 **Boot** 按键一侧，开发板掉电。
电源选择开关	ESP-WROVER-KIT 开发板可通过 USB 端口或 5V 输入接口供电。用户可使用跳线帽在两种供电模式中进行选择。更多详细信息，请见章节设置选项 中有关 JP7 连接器的描述。
5V Input	5V 电源接口。为标准同轴电源接口，5.5 x 2.1 mm，中心正极。建议仅在开发板自动运行（未连接 PC）时使用。
5V Power On LED	当开发板通电后（USB 或外部 5V 供电），该红色指示灯将亮起。
LDO	5V-to-3.3V 低压差线型稳压器 NCP1117(1A)。NCP1117 最大电流输出为 1 A。板上 LDO 为固定输出电压，但用户也可以选用具有可变输出电压的 LDO。更多信息，请见 ESP-WROVER-KIT V4.1 原理图。
摄像头连接器	摄像头接口，支持标准 OV7670 摄像头模块。

Submit Document Feedback

设置选项

用户可通过 3 组排针，设置开发板功能，其中常见功能见下表：

排针	跳线设置	功能描述
JP7	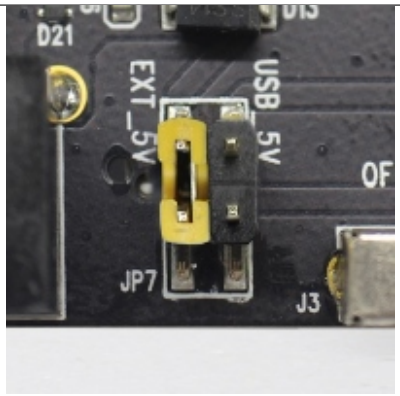	使用外部电源为 ESP-WROVER-KIT 开发板供电
JP7	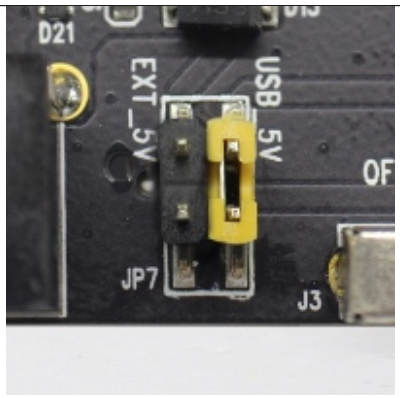	使用 USB 端口为 ESP-WROVER-KIT 开发板供电
JP2	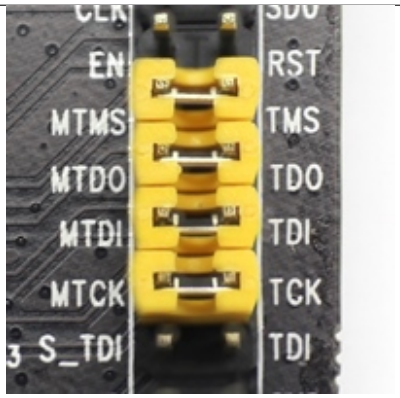	使能 JTAG 功能
JP2	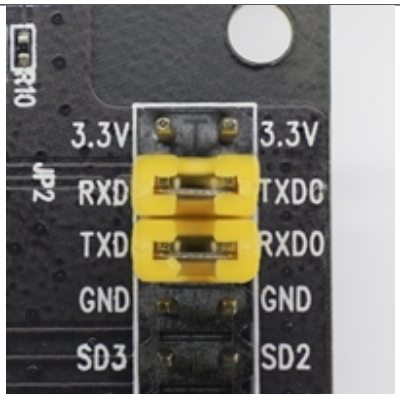	使能 UART 通信

Submit Document Feedback

ESP32 管脚分配

ESP32 模组的部分管脚/终端已被板上组件占用或用于外部硬件设备。如果某管脚对应的特定硬件未连接，则该管脚可用作他用。比如，摄像头/JP4 排针未连接相应硬件，则这些 GPIO 可用于其他用途。

部分管脚具备多个功能，可供板上组件或外部硬件设备同时使用，比如 GPIO0 和 GPIO2。由于管脚限制，一些外围设备不可同时使用，比如，由于 JTAG 和 SD 卡槽需共用部分管脚，因此一些使用 SD 卡功能的应用无法同时进行 JTAG 调试。

其他情况下，不同外设可同时使用。比如，LCD 屏幕和 SD 卡仅共用一个 GPIO21 管脚，可以同时使用。该管脚可为 LCD 屏幕提供 D/C（数据/控制）信号，并用于读取来自 SD 卡槽的 CD 信号（卡检测信号）。如无需使用卡检测功能，开发人员还可以通过移除 R167 来禁用该功能。此时，LCD 和 SD 卡槽可同时使用。

更多外设共享管脚的介绍，请见下一章节中的表格。

主要 I/O 连接器 / JP1 JP1 连接器包括 14 x 2 个排针，具体功能可见下表中间“I/O”列的介绍。两侧的“共用”列则介绍了这些管脚在板上的其他用途。

共用	I/O	I/O	共用
n/a	3.3V	GND	n/a
NC/XTAL	IO32	IO33	NC/XTAL
JTAG，MicroSD	IO12	IO13	JTAG，MicroSD
JTAG，MicroSD	IO14	IO27	摄像头
摄像头	IO26	IO25	摄像头，LCD
摄像头	IO35	IO34	摄像头
摄像头	IO39	IO36	摄像头
JTAG	EN	IO23	摄像头，LCD
摄像头，LCD	IO22	IO21	摄像头，LCD，MicroSD
摄像头，LCD	IO19	IO18	摄像头，LCD
摄像头，LCD	IO5	IO17	PSRAM
PSRAM	IO16	IO4	LED，摄像头，MicroSD
摄像头，LED，Boot	IO0	IO2	LED，MicroSD
JTAG，MicroSD	IO15	5V	

说明：

- NC/XTAL - *32.768 kHz 晶振*
- JTAG - *JTAG / JP2*
- Boot - Boot 按键 / SW2
- 摄像头 - *摄像头 / JP4*
- LED - *RGB LED*
- MicroSD - *MicroSD Card / J4*
- LCD - *LCD / U5*
- PSRAM - ESP32-WROVER-B 的 PSRAM

32.768 kHz 晶振

.	ESP32 管脚
1.	GPIO32
2.	GPIO33

注解： 默认情况下，管脚 GPIO32 和 GPIO33 已连接至晶振。因此，为了保证信号的完整性，这两个管

脚并未连接至 JP1 I/O 连接器。用户可通过将 R11/R23 处的 0 欧电阻移至 R12/R24 处，以将 GP1O32 和 GPIO33 的连接从晶振移至 JP1。

SPI Flash / JP2

.	ESP32 管脚
1.	CLK / GPIO6
2.	SD0 / GPIO7
3.	SD1 / GPIO8
4.	SD2 / GPIO9
5.	SD3 / GPIO10
6.	CMD / GPIO11

重要： 模组的 flash 总线已通过 0 欧电阻 R140 ~ R145 连接至排针 JP2。如果需要将 flash 的工作频率控制在 80 MHz，以达到保证总线信号完整性等目的，建议移除 R140 ~ R145 电阻，将模组的 flash 总线与排针 JP2 断开。

JTAG / JP2

.	ESP32 管脚	JTAG 信号
1.	EN	TRST_N
2.	MTMS / GPIO14	TMS
3.	MTDO / GPIO15	TDO
4.	MTDI / GPIO12	TDI
5.	MTCK / GPIO13	TCK

摄像头 / JP4

.	ESP32 管脚	摄像头信号
1.	n/a	3.3V
2.	n/a	地
3.	GPIO27	SIO_C / SCCB 时钟
4.	GPIO26	SIO_D / SCCB 数据
5.	GPIO25	VSYNC / 垂直同步
6.	GPIO23	HREF / 水平参考
7.	GPIO22	PCLK / 像素时钟
8.	GPIO21	XCLK / 系统时钟
9.	GPIO35	D7 / 像素数据 Bit 7
10.	GPIO34	D6 / 像素数据 Bit 6
11.	GPIO39	D5 / 像素数据 Bit 5
12.	GPIO36	D4 / 像素数据 Bit 4
13.	GPIO19	D3 / 像素数据 Bit 3
14.	GPIO18	D2 / 像素数据 Bit 2
15.	GPIO5	D1 / 像素数据 Bit 1
16.	GPIO4	D0 / 像素数据 Bit 0
17.	GPIO0	RESET / 摄像头复位
18.	n/a	PWDN / 摄像头断电

- D0 到 D7 为摄像头的数据总线

RGB LED

.	ESP32 管脚	RGB LED
1.	GPIO0	红色
2.	GPIO2	绿色
3.	GPIO4	蓝色

MicroSD 卡

.	ESP32 管脚	MicroSD 信号
1.	MTDI / GPIO12	DATA2
2.	MTCK / GPIO13	CD / DATA3
3.	MTDO / GPIO15	CMD
4.	MTMS / GPIO14	CLK
5.	GPIO2	DATA0
6.	GPIO4	DATA1
7.	GPIO21	CD

LCD / U5

.	ESP32 管脚	LCD 信号
1.	GPIO18	复位
2.	GPIO19	SCL
3.	GPIO21	D/C
4.	GPIO22	CS
5.	GPIO23	SDA
6.	GPIO25	SDO
7.	GPIO5	背光

应用程序开发

ESP-WROVER-KIT 上电前，请首先确认开发板完好无损。

初始设置 请严格按照下图所示连接跳线帽，注意不要额外连接其他跳线帽。

- 使用 JP7 连接器，选择 USB 为开发板供电。
- 使用 JP2 连接器，使能 UART 通信。

USB 供电	使能 UART 通信
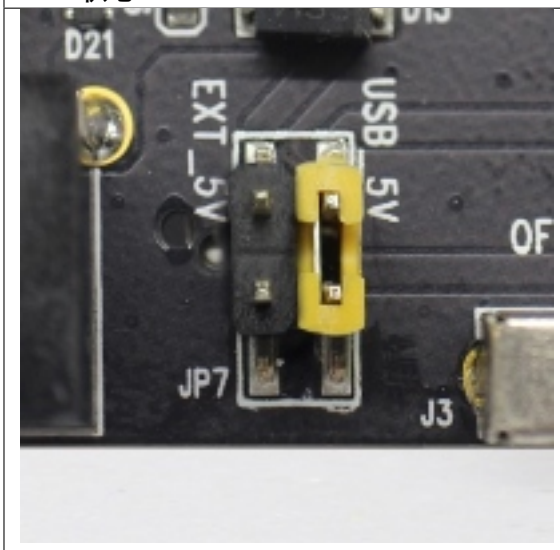	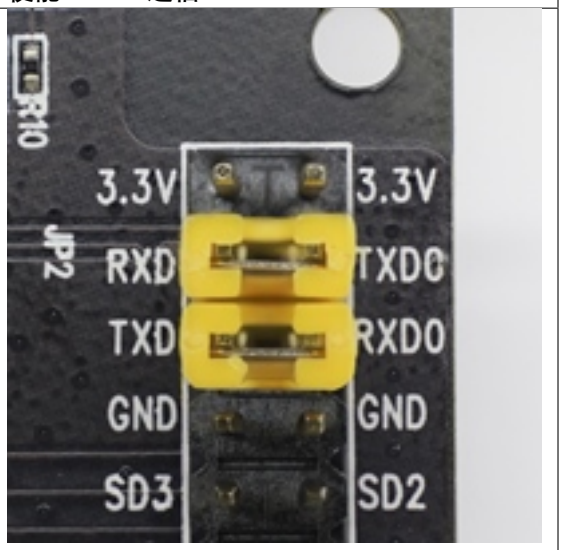

注意不要连接其他跳线帽。

打开 **电源开关**，**5V Power On LED** 应点亮。

正式开始开发 现在，请前往*快速入门* 中的*详细安装步骤* 章节，查看如何设置开发环境，并尝试将示例项目烧录至您的开发板。

以下链接提供了与 ESP-WROVER-KIT 开发板硬件相关的示例：

- 板上 LCD 示例：peripherals/spi_master/lcd
- SD 卡槽示例：storage/sd_card
- 摄像头示例：https://github.com/espressif/esp32-camera

相关文档

- ESP-WROVER-KIT V4.1 原理图 (PDF)
- ESP-WROVER-KIT V4.1 布局 (DXF)
- 《ESP32 技术规格书》 (PDF)
- 《ESP32-WROVER-B 技术规格书》 (PDF)
- *JTAG 调试*
- *ESP32 H/W 硬件参考*

ESP-WROVER-KIT V3 入门指南 本指南介绍了如何开始使用 ESP-WROVER-KIT V3 开发板及其功能和相关配置。有关 ESP-WROVER-KIT 其他版本的介绍，请见：*ESP32 H/W 硬件参考*。

准备工作

- *ESP-WROVER-KIT V3 开发板*
- USB 数据线（A 转 Micro-B）
- PC（Windows、Linux 或 macOS）

您可以跳过介绍部分，直接前往*应用程序开发* 章节。

概述 ESP-WROVER-KIT 是 乐鑫 一款基于 ESP32 的开发板，集成了 LCD 屏幕和 MicroSD 卡槽。

ESP-WROVER-KIT 可选贴以下 ESP32 模组：

- *ESP32-WROOM-32 模组*
- *ESP32-WROVER*

此外，ESP-WROVER-KIT 的独特之处在于集成了一款先进多协议 USB 桥接器 (FTDI FT2232HL)，允许开发人员直接通过 USB 接口，使用 JTAG 对 ESP32 进行调试，无需额外的 JTAG 调试器。ESP-WROVER-KIT 可为开发人员提供简单、便捷且极具成本效益的开发体验。

为了便于使用，板上模组的绝大部分管脚均已引出至开发板的引脚。

注解： 该版本 ESP32-WROVER 模组的 GPIO16 和 GPIO17 管脚用作 PSRAM 的片选和时钟信号。默认情况下，为了给用户提供可靠的性能，这两个 GPIO 管脚不引出至开发板引脚。

功能概述 ESP-WROVER-KIT 开发板的主要组件和连接方式如下图所示。

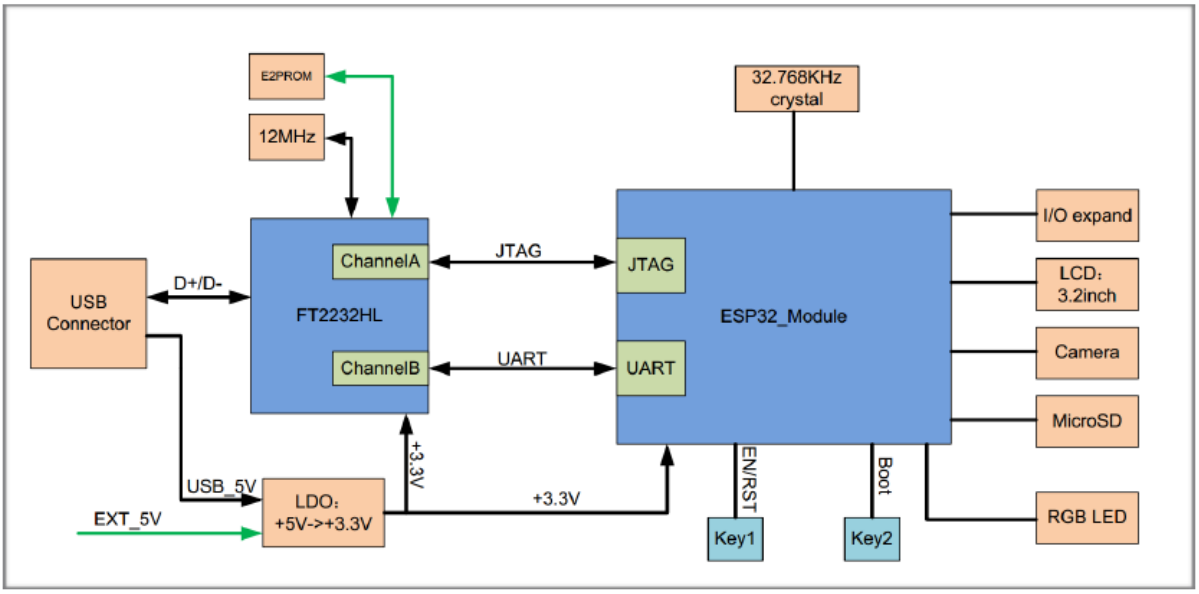

图 5: ESP-WROVER-KIT 功能框图

功能说明 ESP-WROVER-KIT 开发板的主要组件、接口及控制方式见下。

下表从图片右上角开始，以顺时针顺序介绍了图 1 中的主要组件，然后以同样的顺序介绍图 2 中的主要组件。

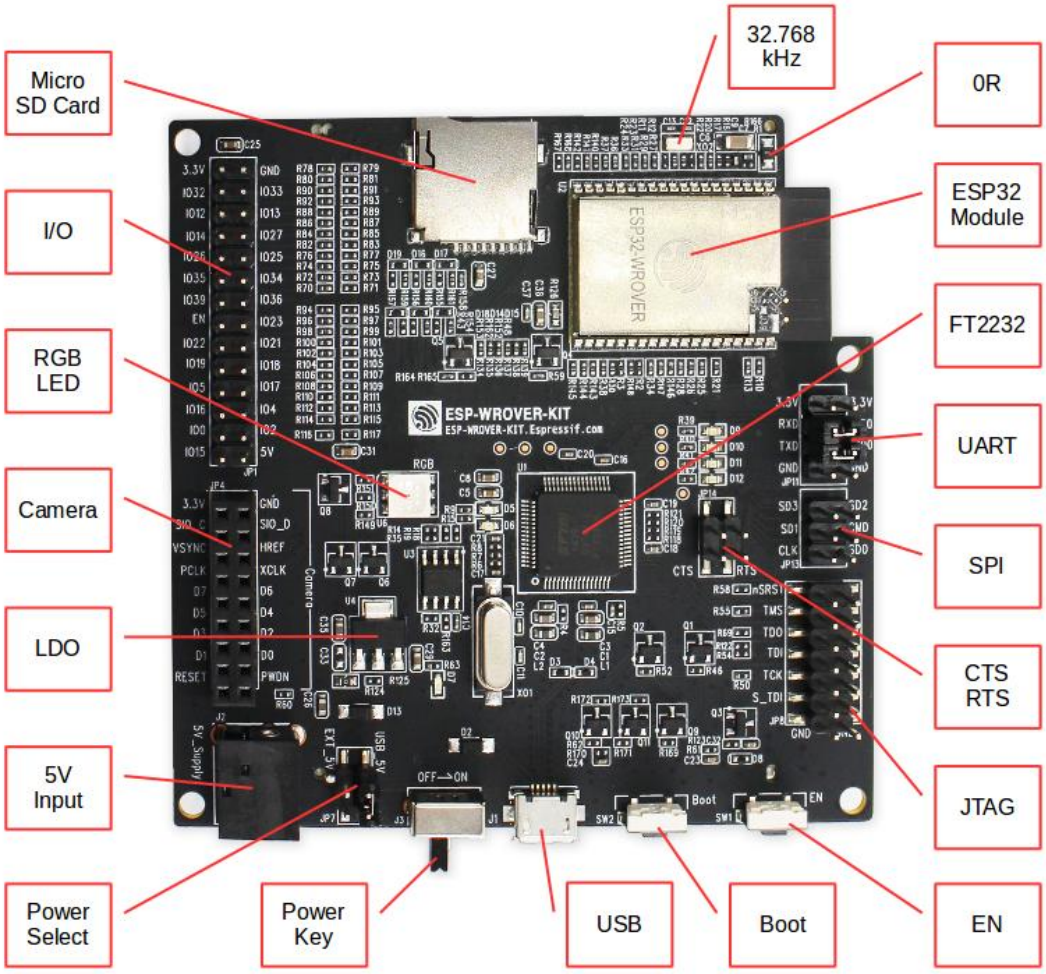

图 6: ESP-WROVER-KIT 开发板布局–俯视图

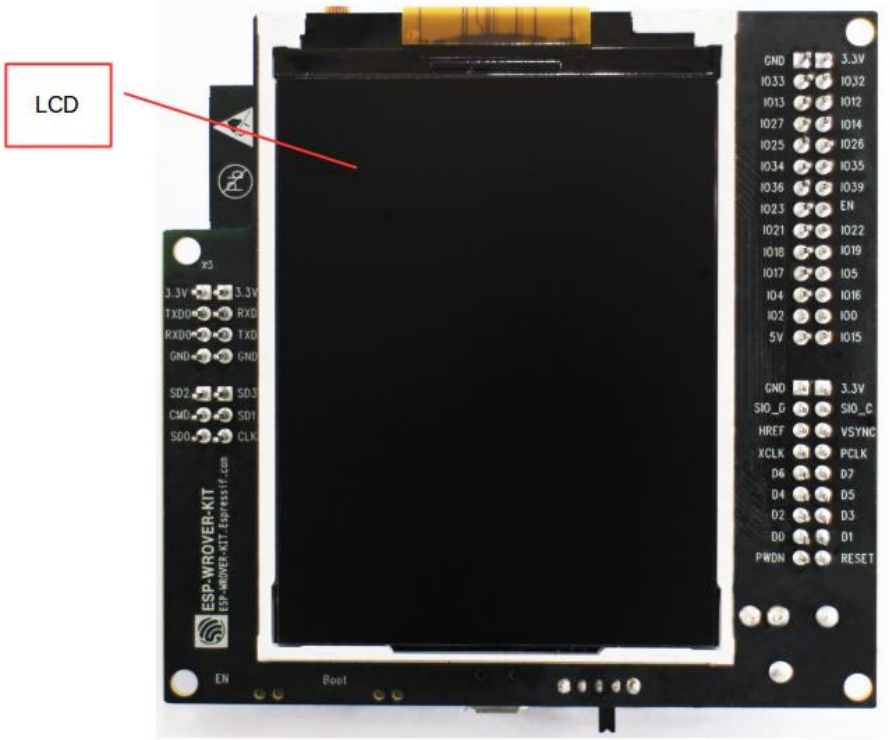

图 7: ESP-WROVER-KIT 开发板布局–仰视图

主要组件	基本介绍
32.768 kHz	外接 32.768 kHz 晶振，可提供 Deep-sleep 下使用的低功耗时钟。
0 欧电阻	ESP-WROVER-KIT 开发板设计了一个 0 欧电阻，可在测量 ESP32 系列模组在不同功耗模式下的电流时，直接移除或替换为分流器。
ESP32 模组	可选贴 ESP32-WROOM-32 或 ESP32-WROVER。ESP32-WROVER 模组完整集成了 ESP32-WROOM-32 的所有功能，且内置 32-Mbit PSRAM，可提供灵活的额外存储空间和数据处理能力。
FT2232	FT2232 多协议 USB 转串口桥接器。开发人员可通过 USB 接口对 FT2232 芯片进行控制和编程，与 ESP32 建立连接。FT2232 芯片可在通道 A 提供 USB-to-JTAG 接口功能，并在通道 B 提供 USB-to-Serial 接口功能，便利开发人员的应用开发与调试。见 ESP-WROVER-KIT V3 原理图。
UART	串口。FT2232HL 和 ESP32 的串行 TX/RX 信号已引出至 JP11 的两端。默认情况下，这两路信号由跳线帽连接。如果要跳过 FT2232 使用 ESP32 模组串口，则可移除相关跳线帽，将模组连接至其他外部串口设备。
SPI	默认情况下，ESP32 使用 SPI 接口访问内置 flash 和 PSRAM。使用这些引脚连接 ESP32 和其他 SPI 设备。这种情况下，需增加额外的片选 (CS) 信号。注意，选贴 ESP32-WROVER 模组时，该接口的工作电压为 1.8 V；选贴 ESP32-WROOM-32 时，该接口的工作电压为 3.3V。
CTS/RTS	串口流控信号。管脚默认不连接至电路。为了使能该功能，必须用跳线帽短路掉 JP14 的相应管脚。
JTAG	JTAG 接口。FT2232HL 和 ESP32 的 JTAG 信号已引出至 JP8 的两端。默认情况下，这两路信号不连接。如需使能 JTAG，请按照设置选项 的介绍，连接跳线帽。
EN	复位按键。
Boot	下载按键。按下 **Boot** 键并保持，同时按一下 **EN** 键（此时不要松开 **Boot** 键）进入“固件下载”模式，通过串口下载固件。
USB	USB 接口。可用作开发板的供电电源，或连接 PC 和开发板的通信接口。
电源开关	拨向 **USB** 按键一侧，开发板上电；拨离 **USB** 按键一侧，开发板掉电。
电源选择开关	ESP-WROVER-KIT 开发板可通过 USB 端口或 5V 输入接口供电。用户可使用跳线帽在两种供电模式中进行选择。更多详细信息，请见章节设置选项 中有关 JP7 连接器的描述。
5V Input	5V 电源接口建议仅在开发板自动运行（未连接 PC）时使用。仅用于全负荷工作下的后备电源。
LDO	5V-to-3.3V 低压差线型稳压器 NCP1117(1A)。NCP1117 最大电流输出为 1 A。板上 LDO 为固定输出电压，但用户也可以选用具有可变输出电压的 LDO。更多信息，请见 ESP-WROVER-KIT V3 原理图。
摄像头	摄像头接口，支持标准 OV7670 摄像头模块。
RGB LED	红绿蓝发光二极管，可由 PWM（脉冲宽度调制）控制。
I/O	板上模组的所有管脚均已引出至开发板的排针。用户可以对 ESP32 进行编程，实现 PWM、ADC、DAC、I2C、I2S、SPI 等多种功能。
MicroSD 卡槽	适用于需要扩充数据存储空间或进行备份的应用开发场景。
LCD 显示屏	支持贴装一款 3.2” 的 SPI（标准四线串行外设接口）LCD 显示器，请见*ESP-WROVER-KIT 开发板布局–仰视图*。

设置选项 用户可通过 5 组排针，设置开发板功能，其中常见功能见下表：

排针	跳线设置	功能描述
JP7	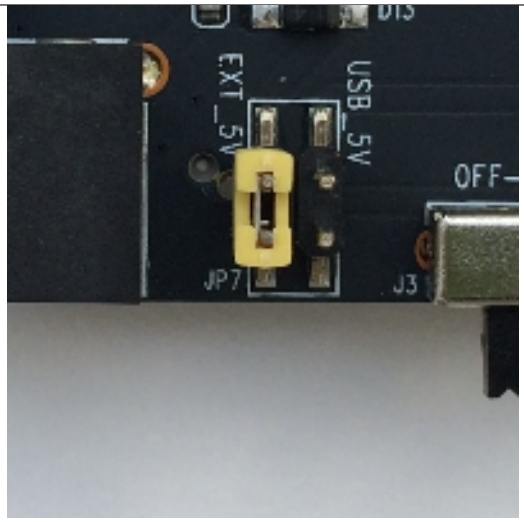	使用外部电源为 ESP-WROVER-KIT 开发板供电
JP7	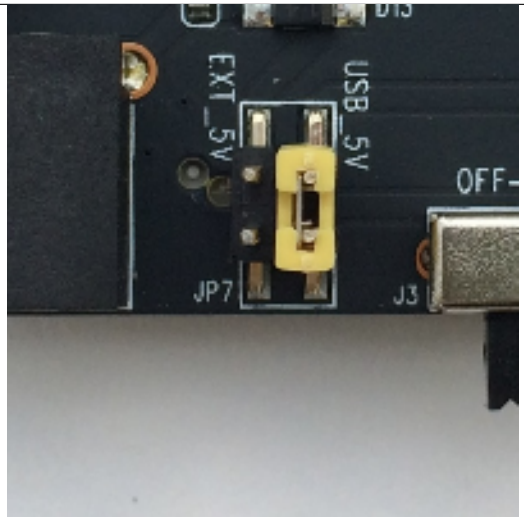	使用 USB 端口为 ESP-WROVER-KIT 开发板供电
JP8	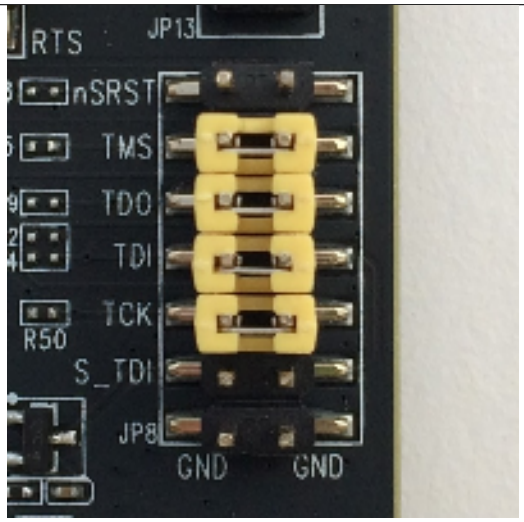	使能 JTAG 功能
	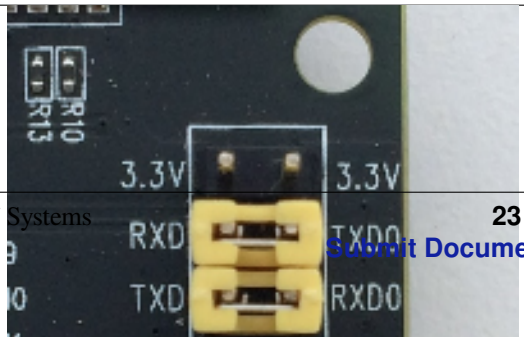	

Submit Document Feedback

ESP32 管脚分配 ESP32 模组的部分管脚/终端已被板上组件占用或用于外部硬件设备。如果某管脚对应的特定硬件未连接，则该管脚可用作他用。比如，摄像头/JP4 排针未连接相应硬件，则这些 GPIO 可用于其他用途。

部分管脚具备多个功能，可供板上组件或外部硬件设备同时使用，比如 GPIO0 和 GPIO2。由于管脚限制，一些外围设备不可同时使用，比如，由于 JTAG 和 SD 卡槽需共用部分管脚，因此一些使用 SD 卡功能的应用无法同时进行 JTAG 调试。

其他情况下，不同外设可同时使用。比如，LCD 屏幕和 SD 卡仅共用一个 GPIO21 管脚，可以同时使用。该管脚可为 LCD 屏幕提供 D/C（数据/控制）信号，并用于读取来自 SD 卡槽的 CD 信号（卡检测信号）。如无需使用卡检测功能，开发人员还可以通过移除 R167 来禁用该功能。此时，LCD 和 SD 卡槽可同时使用。

更多外设共享管脚的介绍，请见下一章节中的表格。

主要 I/O 连接器 / JP1 JP1 连接器包括 14 x 2 个排针，具体功能可见下表中间 “I/O” 列的介绍。两侧的 “共用” 列则介绍了这些管脚在板上的其他用途。

共用	I/O	I/O	共用
n/a	3.3V	GND	n/a
NC/XTAL	IO32	IO33	NC/XTAL
JTAG, MicroSD	IO12	IO13	JTAG, MicroSD
JTAG, MicroSD	IO14	IO27	摄像头
摄像头	IO26	IO25	摄像头，LCD
摄像头	IO35	IO34	摄像头
摄像头	IO39	IO36	摄像头
JTAG	EN	IO23	摄像头，LCD
摄像头，LCD	IO22	IO21	摄像头，LCD，MicroSD
摄像头，LCD	IO19	IO18	摄像头，LCD
摄像头，LCD	IO5	IO17	PSRAM
PSRAM	IO16	IO4	LED，摄像头，MicroSD
摄像头，LED，Boot	IO0	IO2	LED，MicroSD
JTAG，MicroSD	IO15	5V	

说明：

- NC/XTAL - *32.768 kHz Oscillator*
- JTAG - *JTAG / JP8*
- Boot - Boot 按键 / SW2
- 摄像头 - *摄像头 / JP4*
- LED - *RGB LED*
- MicroSD - *MicroSD Card / J4*
- LCD - *LCD / U5*
- PSRAM - 仅适用于选贴 ESP32-WROVER 的情况。

32.768 kHz 晶振

.	ESP32 管脚
1.	GPIO32
2.	GPIO33

注解： 默认情况下，管脚 GPIO32 和 GPIO33 已连接至晶振。因此，为了保证信号的完整性，这两个管脚并未连接至 JP1 I/O 连接器。用户可通过将 R11/R23 处的 0 欧电阻移至 R12/R24 处，以将 GP1O32 和

GPIO33 的连接从晶振移至 JP1。

SPI Flash / JP13

.	ESP32 管脚
1.	CLK / GPIO6
2.	SD0 / GPIO7
3.	SD1 / GPIO8
4.	SD2 / GPIO9
5.	SD3 / GPIO10
6.	CMD / GPIO11

重要： 模组的 flash 总线已通过 0 欧电阻 R140 ~ R145 连接至排针 JP13。如果需要将 flash 的工作频率控制在 80 MHz，为了达到保证总线信号完整性等目的，建议移除 R140 ~ R145 电阻，将模组的 flash 总线与排针 JP2 断开。

JTAG / JP8

.	ESP32 管脚	JTAG 信号
1.	EN	TRST_N
2.	MTMS / GPIO14	TMS
3.	MTDO / GPIO15	TDO
4.	MTDI / GPIO12	TDI
5.	MTCK / GPIO13	TCK

摄像头 / JP4

.	ESP32 管脚	摄像头信号
1.	n/a	3.3V
2.	n/a	地
3.	GPIO27	SIO_C / SCCB 时钟
4.	GPIO26	SIO_D / SCCB 数据
5.	GPIO25	VSYNC / 垂直同步
6.	GPIO23	HREF / 水平参考
7.	GPIO22	PCLK / 像素时钟
8.	GPIO21	XCLK / 系统时钟
9.	GPIO35	D7 / 像素数据 Bit 7
10.	GPIO34	D6 / 像素数据 Bit 6
11.	GPIO39	D5 / 像素数据 Bit 5
12.	GPIO36	D4 / 像素数据 Bit 4
13.	GPIO19	D3 / 像素数据 Bit 3
14.	GPIO18	D2 / 像素数据 Bit 2
15.	GPIO5	D1 / 像素数据 Bit 1
16.	GPIO4	D0 / 像素数据 Bit 0
17.	GPIO0	RESET / 摄像头复位
18.	n/a	PWDN / 摄像头断电

- D0 到 D7 为摄像头的数据总线

RGB LED

.	ESP32 管脚	RGB LED
1.	GPIO0	红色
2.	GPIO2	绿色
3.	GPIO4	蓝色

MicroSD 卡

.	ESP32 管脚	MicroSD 信号
1.	MTDI / GPIO12	DATA2
2.	MTCK / GPIO13	CD / DATA3
3.	MTDO / GPIO15	CMD
4.	MTMS / GPIO14	CLK
5.	GPIO2	DATA0
6.	GPIO4	DATA1
7.	GPIO21	CD

LCD / U5

.	ESP32 管脚	LCD 信号
1.	GPIO18	复位
2.	GPIO19	SCL
3.	GPIO21	D/C
4.	GPIO22	CS
5.	GPIO23	SDA
6.	GPIO25	SDO
7.	GPIO5	背光

应用程序开发 ESP-WROVER-KIT 上电前，请首先确认开发板完好无损。

初始设置 请严格按照下图所示连接跳线帽，注意不要额外连接其他跳线帽。

- 使用 JP7 连接器，选择 USB 为开发板供电。
- 使用 JP11 连接器，使能 UART 通信。

USB 供电	使能 UART 通信
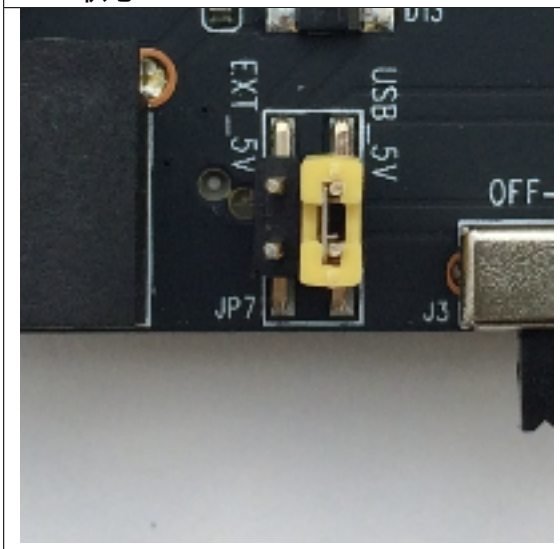	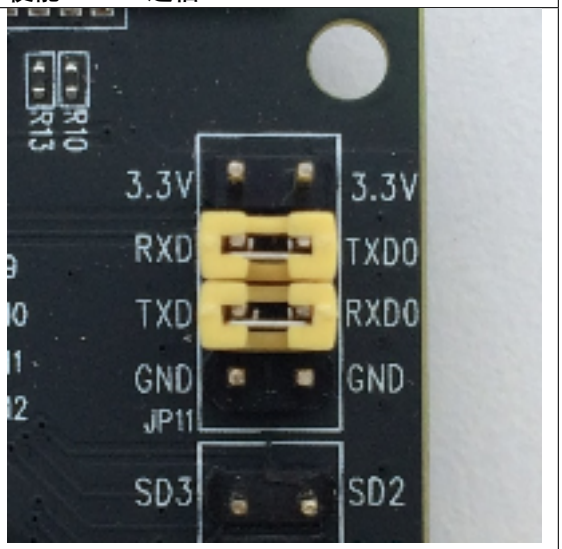

注意不要连接其他跳线帽。

打开 **电源开关**，**5V Power On LED** 应点亮。

正式开始开发 现在，请前往快速入门 中的详细安装步骤 章节，查看如何设置开发环境，并尝试将示例项目烧录至您的开发板。

相关文档

- ESP-WROVER-KIT V3 原理图 (PDF)
- 《ESP32 技术规格书》 (PDF)
- 《ESP32-WROVER 技术规格书》 (PDF)
- 《ESP32-WROOM-32 技术规格书》 (PDF)
- *JTAG 调试*
- *ESP32 H/W 硬件参考*

ESP-WROVER-KIT V2 入门指南 本指南介绍了如何开始使用 ESP-WROVER-KIT V2 开发板及其功能和相关配置。有关 ESP-WROVER-KIT 其他版本的介绍，请见：*ESP32 H/W 硬件参考*。

准备工作

- ESP-WROVER-KIT V2 开发板
- USB 数据线（A 转 Micro-B）
- PC（Windows、Linux 或 macOS）

您可以跳过介绍部分，直接前往应用程序开发 章节。

概述 ESP-WROVER-KIT 是 乐鑫 一款基于 ESP32 的开发板，集成了 LCD 屏幕和 MicroSD 卡槽。

ESP-WROVER-KIT 可选贴以下 ESP32 模组：

- *ESP32-WROOM-32 模组*
- *ESP32-WROVER*

此外，ESP-WROVER-KIT 的独特之处在于集成了一款先进多协议 USB 桥接器 (FTDI FT2232HL)，允许开发人员直接通过 USB 接口，使用 JTAG 对 ESP32 进行调试，无需额外的 JTAG 调试器。ESP-WROVER-KIT 可为开发人员提供简单、便捷且极具成本效益的开发体验。

为了便于使用，板上模组的绝大部分管脚均已引出至开发板的引脚。

注解： ESP-WROVER-KIT V2 板载 ESP32-WROVER 模组的 GPIO16 和 GPIO17 管脚用作 PSRAM 的片选和时钟信号。默认情况下，为了给用户提供可靠的性能，这两个 GPIO 管脚不引出至开发板引脚。

功能概述 ESP-WROVER-KIT 开发板的主要组件和连接方式如下图所示。

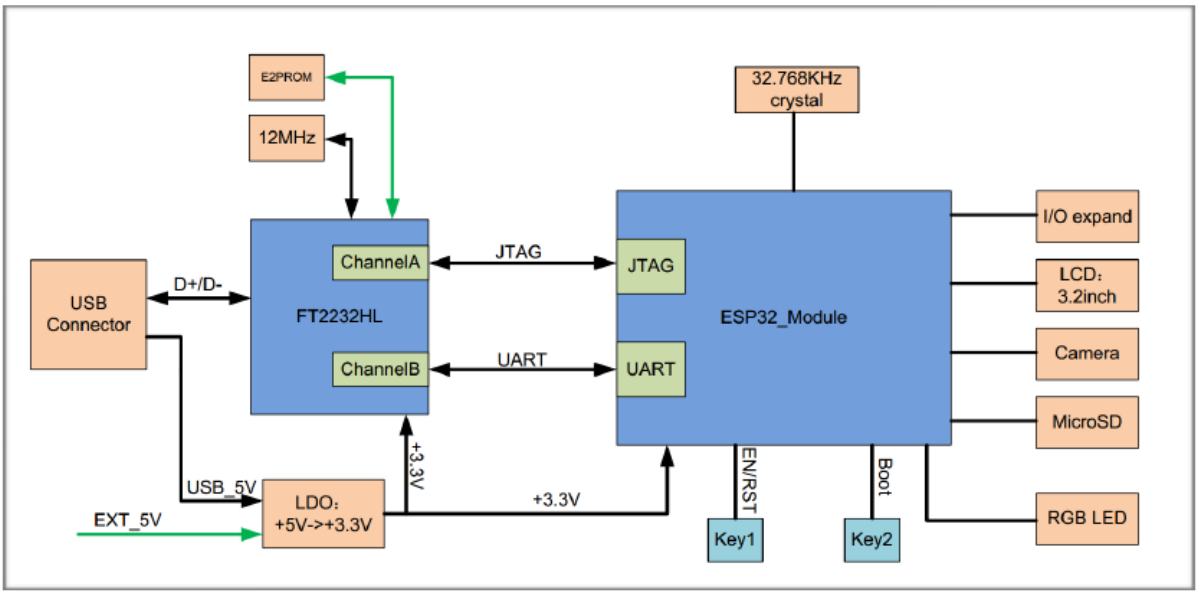

图 8: ESP-WROVER-KIT 功能框图

功能说明 ESP-WROVER-KIT 开发板的主要组件、接口及控制方式见下。

下表从图片右上角开始，以顺时针顺序介绍了图 1 中的主要组件，然后以同样的顺序介绍了图 2 中的主要组件。

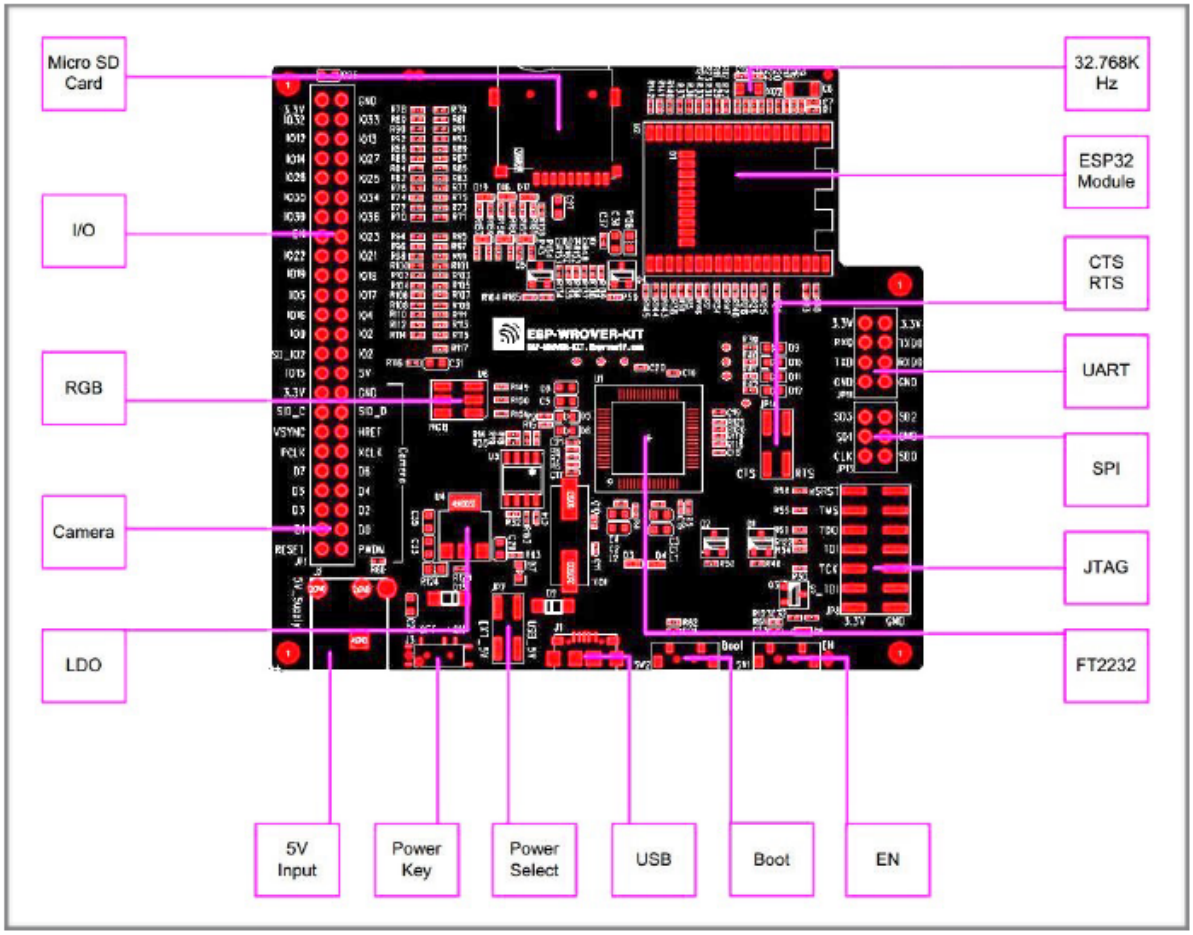

图 9: ESP-WROVER-KIT 开发板布局–俯视图

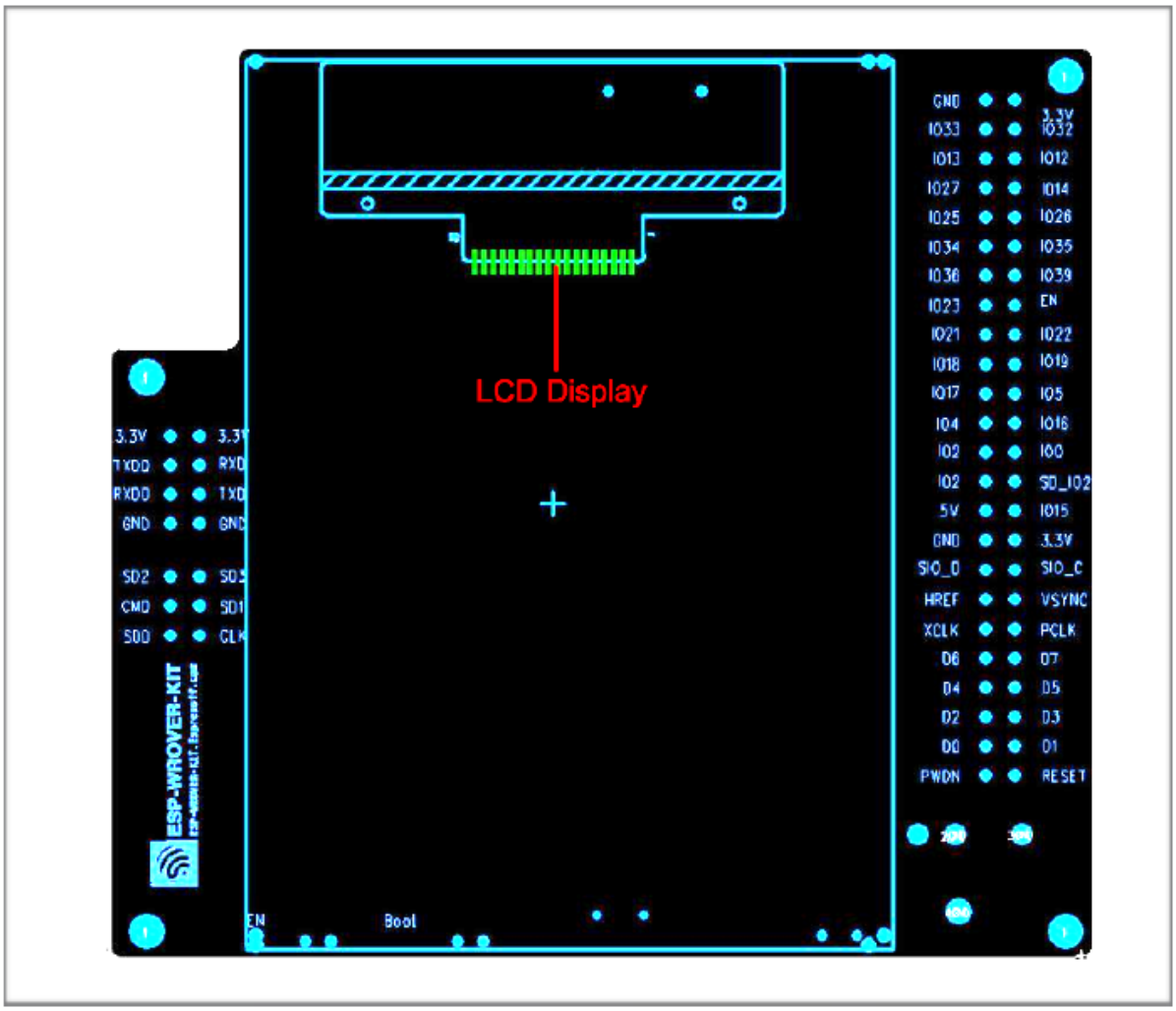

图 10: ESP-WROVER-KIT 开发板布局–仰视图

主要组件	基本介绍
32.768 kHz	外接 32.768 kHz 晶振，可提供 Deep-sleep 下使用的低功耗时钟。
ESP32 模组	可选贴 ESP32-WROOM-32 或 ESP32-WROVER。ESP32-WROVER 模组完整集成了 ESP32-WROOM-32 的所有功能，且内置 32-Mbit PSRAM，可提供灵活的额外存储空间和数据处理能力。
CTS/RTS	串口流控信号。管脚默认不连接至电路。为了使能该功能，必须用跳线帽短路掉 JP14 的相应管脚。
UART	串口。FT2232HL 和 ESP32 的串行 TX/RX 信号已引出至 JP11 的两端。默认情况下，这两路信号由跳线帽连接。如果要跳过 FT2232 使用 ESP32 模组串口，则可移除相关跳线帽，将模组连接至其他外部串口设备。
SPI	默认情况下，ESP32 使用 SPI 接口访问内置 flash 和 PSRAM。使用这些引脚连接 ESP32 和其他 SPI 设备。这种情况下，需增加额外的片选 (CS) 信号。注意，选贴 ESP32-WROVER 模组时，该接口的工作电压为 1.8 V；选贴 ESP32-WROOM-32 时，该接口的工作电压为 3.3V。
JTAG	JTAG 接口。FT2232HL 和 ESP32 的 JTAG 信号已引出至 JP8 的两端。默认情况下，这两路信号不连接。如需使能 JTAG，请按照设置选项 的介绍，连接跳线帽。
FT2232	FT2232 多协议 USB 转串口桥接器。开发人员可通过 USB 接口对 FT2232 芯片进行控制和编程，与 ESP32 建立连接。FT2232 具有 USB-to-UART 和 USB-to-JTAG 功能。
EN	复位按键。
Boot	下载按键。按下 **Boot** 键并保持，同时按一下 **EN** 键（此时不要松开 **Boot** 键）进入“固件下载”模式，通过串口下载固件。
USB	USB 接口。可用作开发板的供电电源，或连接 PC 和开发板的通信接口。
电源选择开关	ESP-WROVER-KIT 开发板可通过 USB 端口或 5V 输入接口供电。用户可使用跳线帽在两种供电模式中进行选择。更多详细信息，请见章节设置选项 中有关 JP7 连接器的描述。
电源开关	拨向 **USB** 按键一侧，开发板上电；拨离 **USB** 按键一侧，开发板掉电。
5V Input	5V 电源接口建议仅在开发板自动运行（未连接 PC）时使用。仅用于全负荷工作下的后备电源。
LDO	5V-to-3.3V 低压差线型稳压器 NCP1117(1A)。NCP1117 最大电流输出为 1 A。板上 LDO 为固定输出电压，但用户也可以选用具有可变输出电压的 LDO。更多信息，请见 ESP-WROVER-KIT V2 原理图。
摄像头	摄像头接口，支持标准 OV7670 摄像头模块。
RGB LED	红绿蓝发光二极管，可由 PWM（脉冲宽度调制）控制。
I/O	板上模组的所有管脚均已引出至开发板的排针。用户可以对 ESP32 进行编程，实现 PWM、ADC、DAC、I2C、I2S、SPI 等多种功能。
MicroSD 卡槽	MicroSD 卡槽，可扩充存储空间：当 ESP32 进入下载模式时，GPIO2 不可处于高电平。然而，为了使能 MicroSD 卡功能，需为 GPIO2 增加一个上拉电阻。默认情况下，GPIO2 和上拉电阻 R153 处于断开状态。为了使能 MicroSD 卡，请按照设置选项 章节的要求，连接 JP1 连接器。
LCD 显示屏	支持贴装一款 3.2” 的 SPI（标准四线串行外设接口）LCD 显示器，请见*ESP-WROVER-KIT 开发板布局–仰视图*。

设置选项 用户可通过 5 组排针，设置开发板功能，其中常见功能见下表：

排针	跳线设置	功能描述
JP1	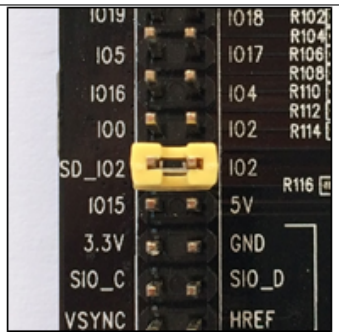	使能 MicroSD Card 功能的上拉电阻
JP1	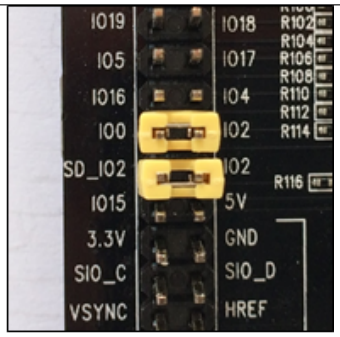	确保开发板处于下载模式时，GPIO2 时钟处于低位（将 JP1 连接至 GPIO0）
JP7	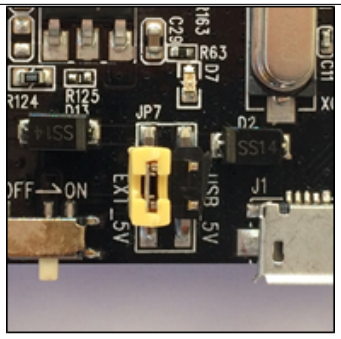	使用外部电源为 ESP-WROVER-KIT 开发板供电
JP7	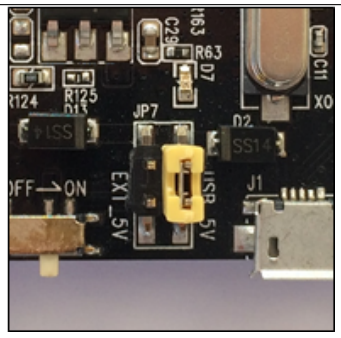	使用 USB 端口为 ESP-WROVER-KIT 开发板供电
JP8	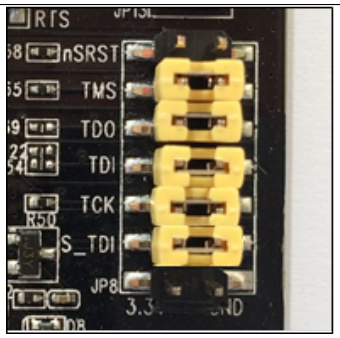	使能 JTAG 功能
	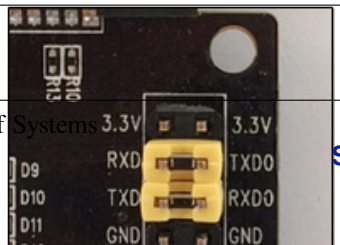	

应用程序开发 ESP-WROVER-KIT 上电前，请首先确认开发板完好无损。

初始设置 请严格按照下图所示连接跳线帽，注意不要额外连接其他跳线帽。

- 使用 JP7 连接器，选择 USB 为开发板供电。
- 使用 JP11 连接器，使能 UART 通信。

USB 供电	使能 UART 通信
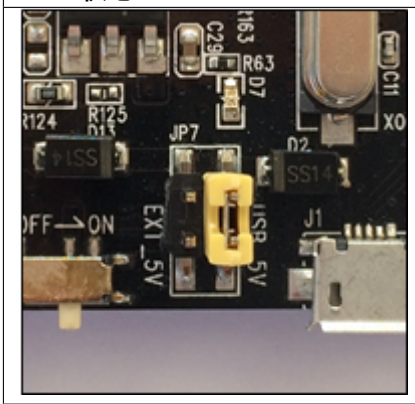	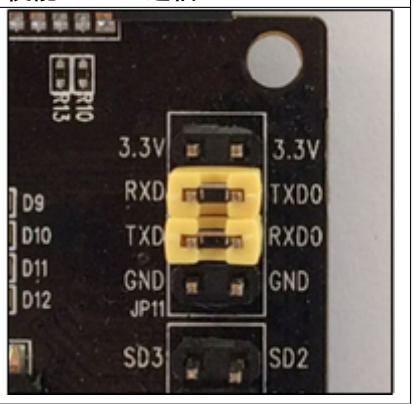

注意不要连接其他跳线帽。

打开 **电源开关**，**5V Power On LED** 应点亮。

正式开始开发 现在，请前往*快速入门* 中的*详细安装步骤* 章节，查看如何设置开发环境，并尝试将示例项目烧录至您的开发板。

相关文档

- ESP-WROVER-KIT V2 原理图 (PDF)
- 《ESP32 技术规格书》 (PDF)
- 《ESP32-WROVER 技术规格书》 (PDF)
- 《ESP32-WROOM-32 技术规格书》 (PDF)
- *JTAG 调试*
- *ESP32 H/W 硬件参考*

1.3.3 ESP32-PICO-KIT V4/V4.1 入门指南

本指南介绍了如何开始使用 ESP32-PICO-KIT V4 / V4.1 迷你开发板。有关 ESP32-PICO-KIT 其他版本的介绍，请见：*ESP32 H/W 硬件参考*。

本指南仅适用于 ESP32-PICO-KIT V4 和 V4.1。ESP32-PICO-KIT V4.1 与 V4 的最大差别在于桥接器，其中 V4 搭载的 CP2102 USB-to-UART 桥接器最高速率为 1 Mbps，V4.1 搭载的 CP2102N 桥接器最高传输速率 3 Mbps。

准备工作

- *ESP32-PICO-KIT 迷你开发板*
- USB 2.0 线（A 型转 Micro-B 型）
- PC（Windows、Linux 或 Mac OS）

您可以跳过介绍部分，直接前往*应用程序开发* 章节。

概述

ESP32-PICO-KIT 是一款来自 乐鑫 的迷你开发板，其核心是具有完整 Wi-Fi 和蓝牙功能的 ESP32 系列 SiP 模组 ESP32-PICO-D4。与其他 ESP32 系列模组相比，ESP32-PICO-D4 模组已完整集成以下外围器件：

- 40 MHz 晶体振荡器
- 4 MB flash
- 滤波电容
- 射频匹配网络等

这大大降低了用户额外采购和安装这些元器件的数量和成本，及额外组装测试的复杂度，并增加了可用性。

ESP32-PICO-KIT 集成了 USB 转 UART 桥接电路，允许开发人员直接通过 PC 的 USB 端口进行下载和调试。

为了便于连接，ESP32-PICO-D4 上的所有 IO 信号和系统电源管脚均通过开发板两侧焊盘（每侧 20 个 x 0.1 英寸间隔）引出。为了方便杜邦线的使用，ESP32-PICO-KIT 开发板每侧的 20 个焊盘中，有 17 个引出至排针，另外 3 个靠近天线的焊盘未引出，可供用户日后焊接使用。

注解:

1. 每排未引出至排针的 3 个管脚已连接至 ESP32-PICO-D4 SiP 模组的内置 flash 模块。更多信息，请见相关文档 中的模组技术规格书。
2. ESP32-PICO-D4 开发板默认采用排针。

功能概述

ESP32-PICO-KIT 开发板的主要组件和连接方式见下。

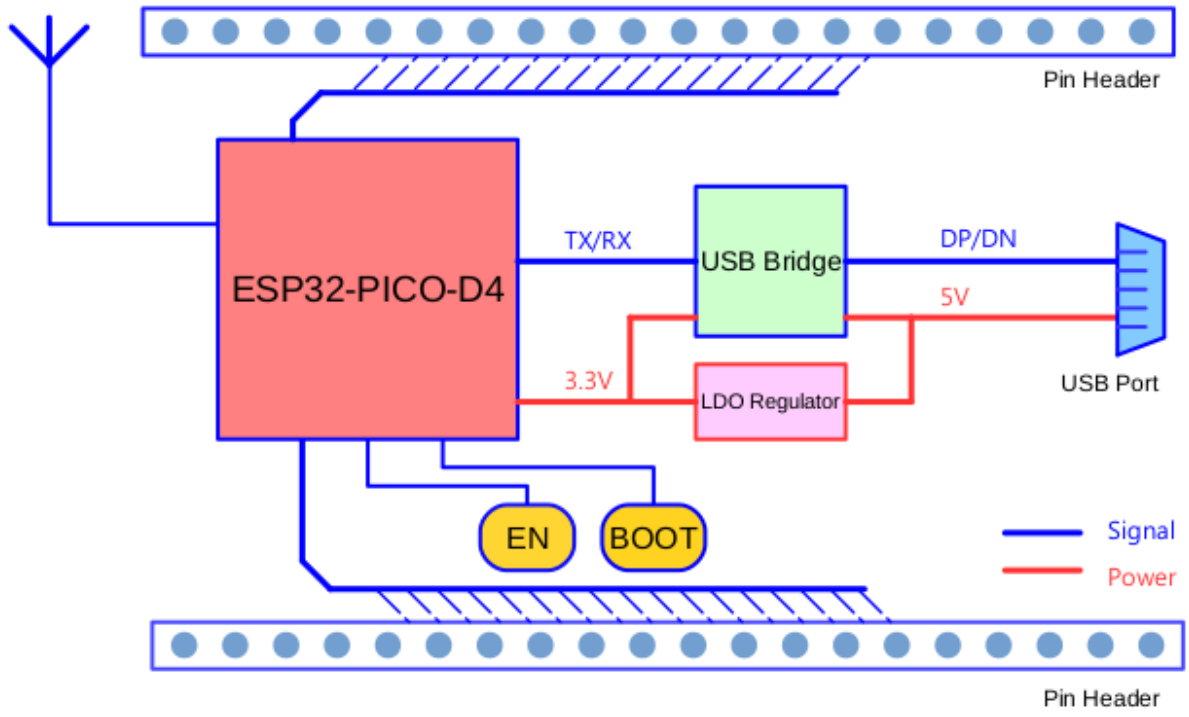

图 11: ESP32-PICO-KIT 框图

功能说明

ESP32-PICO-KIT 开发板的主要组件、接口及控制方式见下。

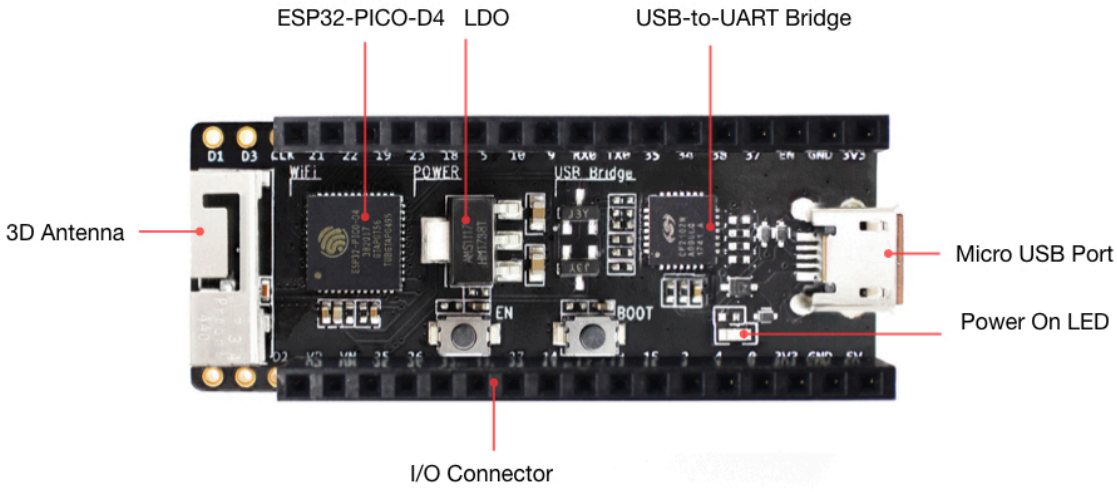

图 12: ESP32-PICO-KIT 开发板布局

ESP32-PICO-KIT 开发板的主要组件描述见下表（从左上角起顺时针顺序）。

主要组件	基本介绍
ESP32-PICO-D4	ESP32-PICO-KIT 开发板上焊接的标准 ESP32-PICO-D4 模组，集成了 ESP32 芯片的完整系统，仅需连接天线、LC 匹配电路、退耦电容和一个 EN 信号上拉电阻即可正常工作。
LDO	5V-to-3.3V 低压差稳压器
USB-to-UART 桥接器	单芯片 USB-to-UART 桥接器。V4 版本搭载的 CP2102 可提供高达 1 Mbps 的传输速率，V4.1 版本搭载的 CP2102N 可提供高达 3 Mbps 的传输速率。
Micro USB 端口	USB 接口。可用作开发板的供电电源，或连接 PC 和开发板的通信接口。
5V Power On LED	开发板通电后，该红色指示灯将亮起。更多信息，请见相关文档 中的原理图。
I/O	ESP32-PICO-D4 的所有管脚均已引出至开发板的排针。用户可以对 ESP32 进行编程，实现 PWM、ADC、DAC、I2C、I2S、SPI 等多种功能。更多详情，请见章节管脚说明。
BOOT	下载按键。按下 **Boot** 键并保持，同时按一下 **EN** 键（此时不要松开 **Boot** 键）进入“固件下载”模式，通过串口下载固件。
EN	复位按键。

电源选项

开发板可任一选用以下三种供电方式：

- Micro USB 供电（默认）
- 5V / GND 管脚供电
- 3V3 / GND 管脚供电

警告： 上述供电模式 **不可同时连接**，否则可能会损坏开发板和/或电源。

管脚说明

下表介绍了开发板 I/O 管脚的 **名称**和 **功能**，具体布局请见相关文档 中的原理图。请参考*ESP32-PICO-KIT 开发板布局*。

Header J2

编号	名称	类型	功能
1	FLASH_SD1 (FSD1)	I/O	GPIO8, SD_DATA1, SPID, HS1_DATA1 （见说明 *1*） , U2CTS
2	FLASH_SD3 (FSD3)	I/O	GPIO7, SD_DATA0, SPIQ, HS1_DATA0 （见说明 *1*） , U2RTS
3	FLASH_CLK (FCLK)	I/O	GPIO6, SD_CLK, SPICLK, HS1_CLK （见说明 *1*） , U1CTS
4	IO21	I/O	GPIO21, VSPIHD, EMAC_TX_EN
5	IO22	I/O	GPIO22, VSPIWP, U0RTS, EMAC_TXD1
6	IO19	I/O	GPIO19, VSPIQ, U0CTS, EMAC_TXD0
7	IO23	I/O	GPIO23, VSPID, HS1_STROBE
8	IO18	I/O	GPIO18, VSPICLK, HS1_DATA7
9	IO5	I/O	GPIO5, VSPICS0, HS1_DATA6, EMAC_RX_CLK
10	IO10	I/O	GPIO10, SD_DATA3, SPIWP, HS1_DATA3, U1TXD
11	IO9	I/O	GPIO9, SD_DATA2, SPIHD, HS1_DATA2, U1RXD
12	RXD0	I/O	GPIO3, U0RXD （见说明 *3*） , CLK_OUT2

Header J3

No.	Name	Type	Function
1	FLASH_CS (FCS)	I/O	GPIO16, HS1_DATA4 (见说明 *1*) , U2RXD, EMAC_CLK_OUT
2	FLASH_SD0 (FSD0)	I/O	GPIO17, HS1_DATA5 (见说明 *1*) , U2TXD, EMAC_CLK_OUT_180
3	FLASH_SD2 (FSD2)	I/O	GPIO11, SD_CMD, SPICS0, HS1_CMD (见说明 *1*) , U1RTS
4	SENSOR_VP (FSVP)	I	GPIO36, ADC1_CH0, RTC_GPIO0
5	SENSOR_VN (FSVN)	I	GPIO39, ADC1_CH3, RTC_GPIO3
6	IO25	I/O	GPIO25, DAC_1, ADC2_CH8, RTC_GPIO6, EMAC_RXD0
7	IO26	I/O	GPIO26, DAC_2, ADC2_CH9, RTC_GPIO7, EMAC_RXD1
8	IO32	I/O	32K_XP (见说明 *2a*) , ADC1_CH4, TOUCH9, RTC_GPIO9
9	IO33	I/O	32K_XN (见说明 *2b*) , ADC1_CH5, TOUCH8, RTC_GPIO8
10	IO27	I/O	GPIO27, ADC2_CH7, TOUCH7, RTC_GPIO17 EMAC_RX_DV
11	IO14	I/O	ADC2_CH6, TOUCH6, RTC_GPIO16, MTMS, HSPICLK

有关上表的说明：

1. 该管脚已连接至 ESP32-PICO-D4 的内置 flash 管脚。
2. 32.768 kHz 晶振：(a) 输入；(b) 输出。
3. 该管脚已连接至开发板的 USB 桥接器芯片。
4. ESP32-PICO-KIT 内置 SPI flash 的工作电压为 3.3V。因此，strapping 管脚 MTDI 在模组上电复位过程中应保持低电平。如连接该管脚，请确保该管脚在复位中不要保持高电平。

应用程序开发

ESP32-PICO-KIT 上电前，请首先确认开发板完好无损。

现在，请前往快速入门 中的详细安装步骤 章节，查看如何设置开发环境，并尝试将示例项目烧录至您的开发板。

开发板尺寸

ESP32-PICO-KIT 的尺寸为 52 x 20.3 x 10 mm (2.1” x 0.8” x 0.4”)。

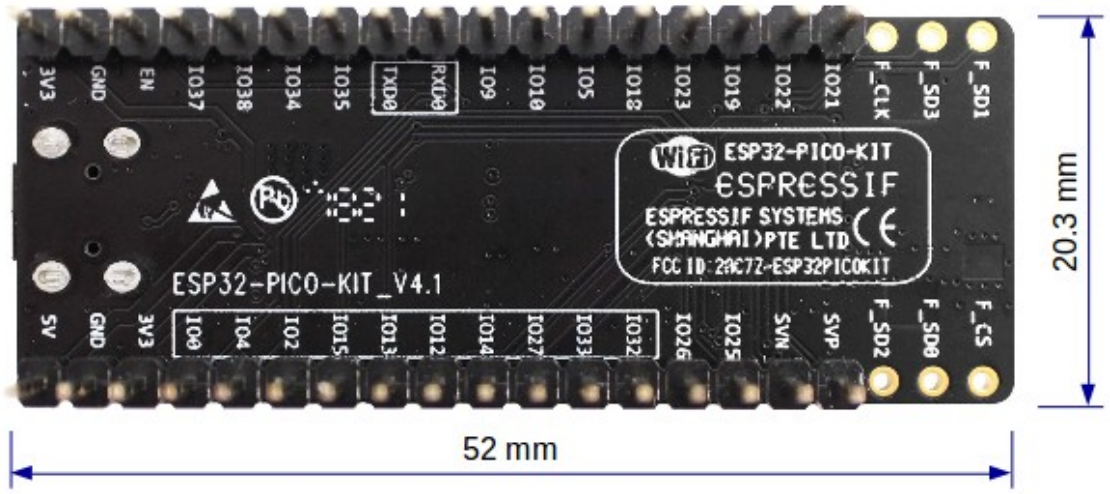

图 13: ESP32-PICO-KIT 尺寸图–背面

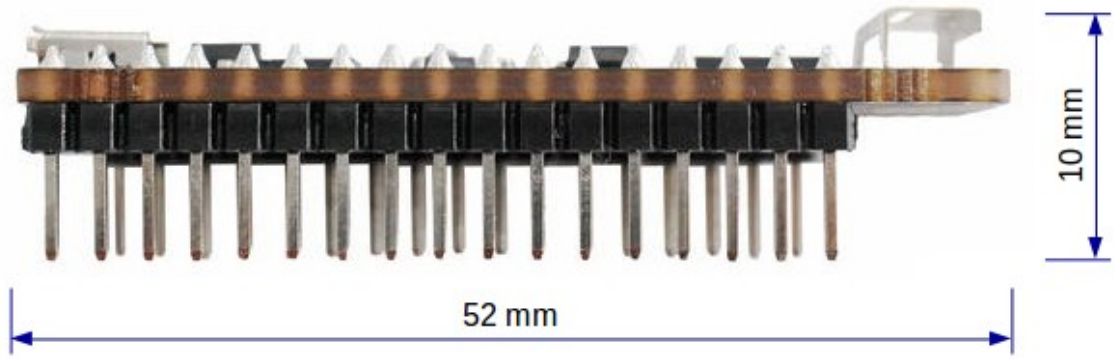

图 14: ESP32-PICO-KIT 尺寸图–侧面

有关开发板的物理结构细节，请见下方参考设计。

相关文档

- ESP32-PICO-KIT V4 原理图 (PDF)
- ESP32-PICO-KIT V4.1 原理图 (PDF)
- ESP32-PICO-KIT 参考设计，内含 OrCAD 原理图、PCB 布局、Gerbers 和 BOM 表。
- 《ESP32-PICO-D4 技术规格书》 (PDF)
- *ESP32 H/W 硬件参考*

ESP32-PICO-KIT V3 入门指南 本指南介绍了如何开始使用 ESP32-PICO-KIT V3 迷你开发板。有关 ESP32-PICO-KIT 其他版本的介绍，请见：*ESP32 H/W 硬件参考*。

准备工作

- ESP32-PICO-KIT V3 迷你开发板
- USB 2.0 线（A 型转 Micro-B 型）
- PC（Windows、Linux 或 Mac OS）

您可以跳过介绍部分，直接前往应用程序开发 章节。

概述 ESP32-PICO-KIT V3 是一款来自 乐鑫 的迷你开发板，其核心是具有完整 Wi-Fi 和蓝牙功能的 ESP32 系列 SiP 模组 ESP32-PICO-D4。

ESP32-PICO-KIT 集成了 USB 转 UART 桥接电路，允许开发人员直接通过 PC 的 USB 端口进行下载和调试。

为了便于连接，ESP32-PICO-D4 上的所有 IO 信号和系统电源管脚均通过开发板两侧焊盘（每侧 20 个 x 0.1 英寸间隔）引出。

功能说明 ESP32-PICO-KIT V3 开发板的主要组件、接口及控制方式见下。

ESP32-PICO-KIT 开发板的主要组件描述见下表。

主要组件	基本介绍
ESP32-PICO-D4	ESP32-PICO-KIT V3 开发板上焊接的标准 ESP32-PICO-D4 模组，集成了 ESP32 芯片的完整系统，仅需连接天线、LC 匹配电路、退耦电容和一个 EN 信号上拉电阻即可正常工作。
LDO	5V-to-3.3V 低压差稳压器。
USB-to-UART 桥接器	单芯片 USB-to-UART 桥接器，可提供高达 1 Mbps 的传输速率。
Micro USB 端口	USB 接口。可用作开发板的供电电源，或连接 PC 和开发板的通信接口。
Power On LED	开发板通电后，该红色指示灯将亮起。
I/O	ESP32-PICO-D4 的所有管脚均已引出至开发板的排针。用户可以对 ESP32 进行编程，实现 PWM、ADC、DAC、I2C、I2S、SPI 等多种功能。
BOOT	下载按键。按下 **Boot** 键并保持，同时按一下 **EN** 键（此时不要松开 **Boot** 键）进入“固件下载”模式，通过串口下载固件。
EN	复位按键。

应用程序开发 ESP32-PICO-KIT V3 上电前，请首先确认开发板完好无损。

现在，请前往快速入门 中的详细安装步骤 章节，查看如何设置开发环境，并尝试将示例项目烧录至您的开发板。

相关文档

- ESP32-PICO-KIT V3 原理图 (PDF)
- 《ESP32-PICO-D4 技术规格书》 (PDF)
- *ESP32 H/W 硬件参考*

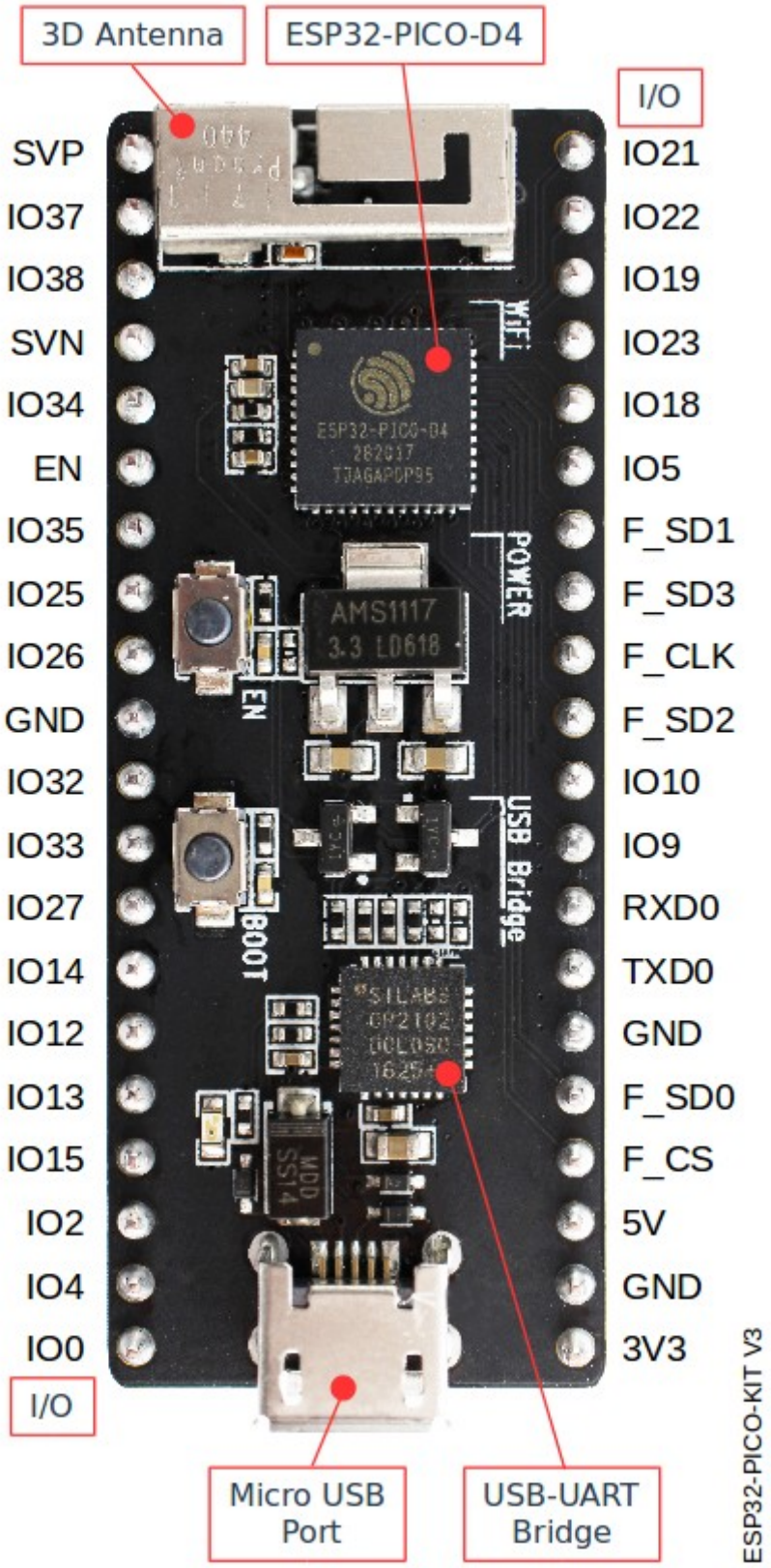

图 15: ESP32-PICO-KIT V3 开发板布局

1.3.4 ESP32-Ethernet-Kit V1.2 入门指南

本指南将介绍 ESP32-Ethernet-Kit 开发板的配置以及相关功能的使用。

ESP32-Ethernet-Kit 是一款以太网转 Wi-Fi 开发板，可为以太网设备赋予 Wi-Fi 连接功能。为了提供更灵活的电源选项，ESP32-Ethernet-Kit 同时也支持以太网供电 (PoE)。

图 16: ESP32-Ethernet-Kit V1.2 概图（点击放大）

准备工作

- *ESP32-Ethernet-Kit V1.2 开发板*
- USB 数据线（A 转 Micro-B）
- PC（Windows、Linux 或 Mac OS）

您可以跳过介绍部分，直接前往*应用程序开发* 章节。

概述

ESP32-Ethernet-Kit 是一款来自 乐鑫 的开发板。

它由*以太网母板（A 板）* 和*PoE 子板（B 板）* 两部分组成。其中*以太网母板（A 板）* 集成蓝牙/Wi-Fi 双模 ESP32-WROVER-E 模组和单端口 10/100 Mbps 快速以太网收发器 (PHY) IP101GRI。*PoE 子板（B 板）* 提供以太网供电功能。ESP32-Ethernet-Kit 的 A 板可在不连接 B 板的情况下独立工作。

为了实现程序下载和监控，A 板还集成了一款先进多协议 USB 桥接器（FT2232H 芯片）。FT2232H 芯片使得开发人员无需额外的 JTAG 适配器，通过 USB 桥接器使用 JTAG 接口便可对 ESP32 直接进行调试。

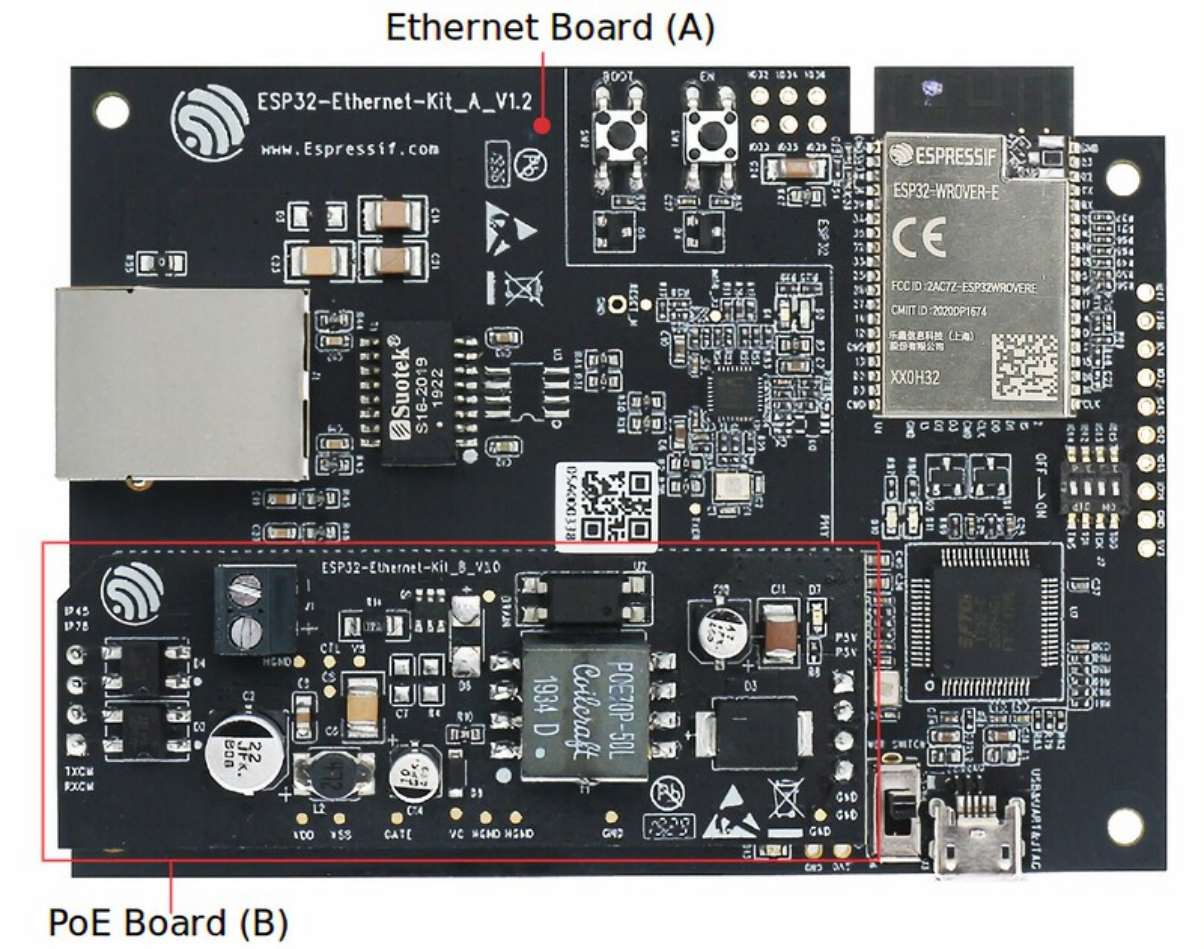

图 17: ESP32-Ethernet-Kit V1.2（点击放大）

功能概述

ESP32-Ethernet-Kit 开发板的主要组件和连接方式如下。

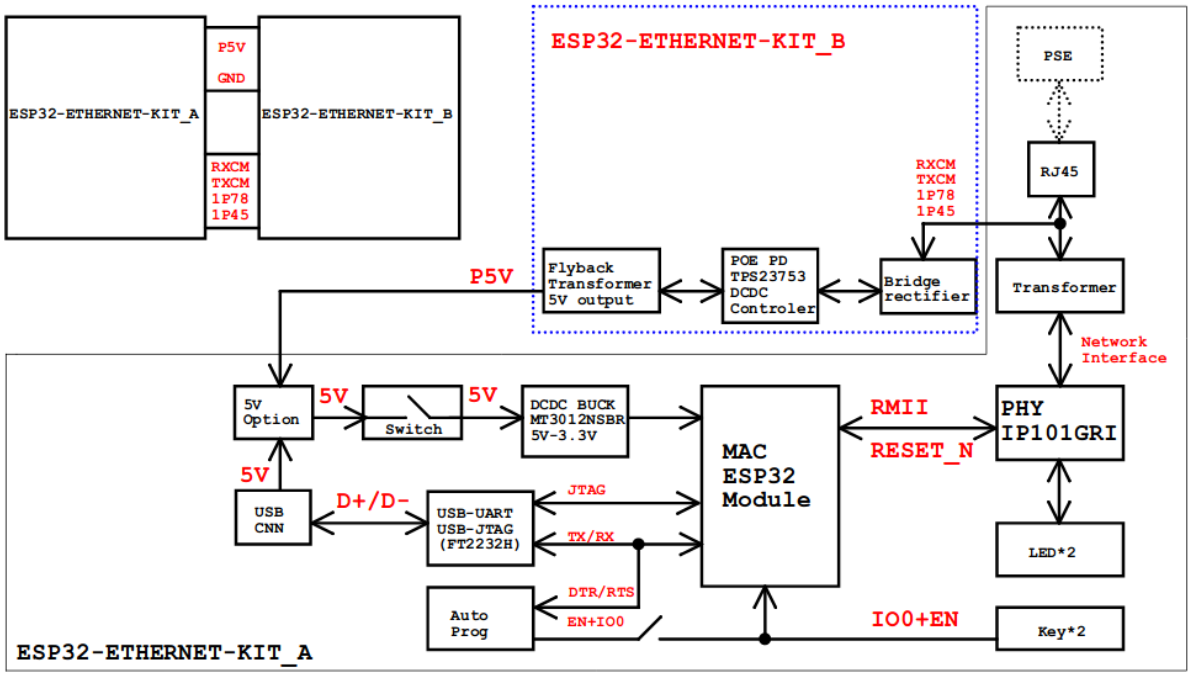

图 18: ESP32-Ethernet-Kit 功能框图（点击放大）

功能说明

有关 ESP32-Ethernet-Kit 开发板的主要组件、接口及控制方式，请见下方的图片和表格。

以太网母板（A 板） 下表将从图片右上角开始，以顺时针顺序介绍图中的主要组件。

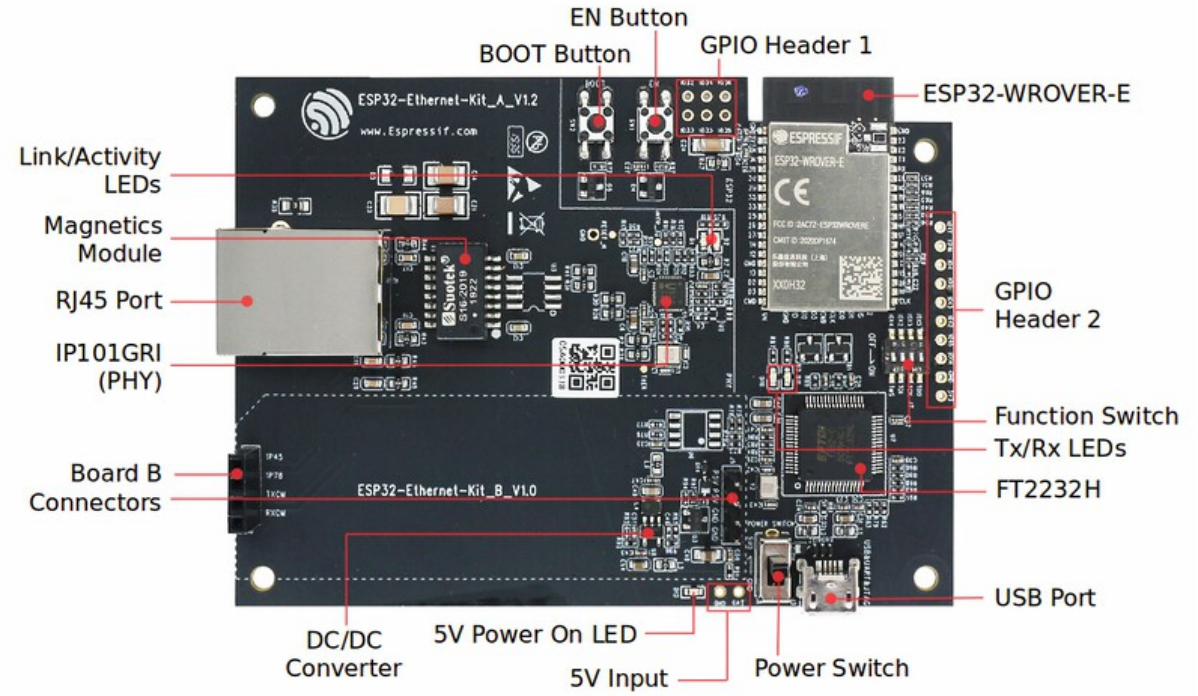

图 19: ESP32-Ethernet-Kit - 以太网母板（A 板）布局（点击放大）

表 1: 表格 1 组件介绍

主要组件	基本介绍
ESP32-WROVER-E 模组	这款 ESP32 模组内置 64-Mbit PSRAM，可提供灵活的额外存储空间和数据处理能力。
GPIO Header 2	由 5 个未引出通孔组成，可连接至 ESP32 的部分 GPIO。具体介绍，请见*GPIO Header 2*。
功能选择开关	一个 4 位拨码开关，可配置 ESP32 部分 GPIO 的功能。具体介绍，请见*功能选择开关*。
Tx/Rx LEDs	2 个 LED，可显示 UART 传输的状态。
FT2232H	FT2232H 多协议 USB 转串口桥接器。开发人员可通过 USB 接口对 FT2232H 芯片进行控制和编程，与 ESP32 建立连接。FT2232H 芯片可在通道 A 提供 USB-to-JTAG 接口功能，并在通道 B 提供 USB-to-Serial 接口功能，便利开发人员的应用开发与调试。见 ESP32-Ethernet-Kit V1.2 以太网母板（A 板）原理图。
USB 端口	USB 接口。可用作开发板的供电电源，或连接 PC 和开发板的通信接口。
电源开关	电源开关。拨向 **5V0** 按键侧，开发板上电；拨向 **GND** 按键一侧，开发板掉电。
5V Input	5V 电源接口建议仅在开发板自动运行（未连接 PC）时使用。
5V Power On LED	当开发板通电后（USB 或外部 5V 供电），该红色指示灯将亮起。
DC/DC 转换器	直流 5 V 转 3.3 V，输出电流最高可达 2 A。
Board B 连接器	1 对排针和排母，用于连接*PoE 子板（B 板）*。
IP101GRI (PHY)	物理层 (PHY) 单端口 10/100 快速以太网收发器 IP101GRI 芯片，允许开发人员实现与以太网线缆的物理层连接。PHY 与 ESP32 通过简化媒体独立接口 (RMII) 实现连接。RMII 是 媒体独立接口 (MII) 的标准简化版本。PHY 可在 10/100 Mbps 速率下支持 IEEE 802.3 / 802.3u 标准。
RJ45 端口	以太网数据传输端口。
网络变压器	网络变压器属于以太网物理层的一部分，可保护电路，使其免受故障和电压瞬变影响，包括防止收发器芯片和线缆之间产生共模信号。同时它也可以在收发器与以太网设备之间提供电流隔绝。
Link/Activity LED	2 个 LED（绿色和红色），可分别显示 PHY 处于 “Link” 状态或 “Activity” 状态。
BOOT Button	下载按键。按下 **BOOT** 键并保持，同时按一下 **EN** 键（此时不要松开 **BOOT** 键）进入 “固件下载” 模式，通过串口下载固件。
EN 按键	复位按键。
GPIO Header 1	由 6 个未引出通孔组成，可连接至 ESP32 的备用 GPIO。具体介绍，请见*GPIO Header 1*。

注解： 如果采用了固件自动下载模式，则无需对 BOOT 或 EN 按键进行任何操作。

PoE 子板（B 板） PoE 子板转换以太网电缆传输的电能 (PoE)，为以太网母板（A 板）提供电源。PoE 子板（B 板）的主要组件见功能概述 中的功能框图。

PoE 子板（B 板）具有以下特性：

- 支持 IEEE 802.3at 标准
- 电源输出：5 V，1.4 A

如需使用 PoE 功能，请用以太网线缆将以太网母板（A 板）上的 **RJ45 Port** 连接至 PoE 的交换机。以太网母板（A 板）检测到来自 PoE 子板（B 板）的 5 V 供电后，将从 USB 供电自动切换至 PoE 供电。

图 20: ESP32-Ethernet-Kit - PoE 子板（B 板）布局（点击放大）

表 2: 表格 2 PoE 子板（B 板）

主要组件	基本介绍
A 板连接器	4 个排针（左侧）和排母（右侧），用于将 PoE 子板（B 板）连接至*Ethernet board (A)*。左侧的管脚接受来自 PoE 交换机的电源。右侧的管脚为以太网母板（A 板）提供 5 V 电源。
外部电源终端	PoE 子板（B 板）可选电源 (26.6 ~ 54 V)。

设置选项

本节介绍用于 ESP32-Ethernet-Kit 开发板的硬件配置选项。

功能选择开关 拨码开关打开时，拨码开关将列出的 GPIO 路由到 FT2232H 以提供 JTAG 功能。拨码开关关闭时，GPIO 可以用于其他目的。

拨码开关	GPIO 管脚
1	GPIO13
2	GPIO12
3	GPIO15
4	GPIO14

RMII 时钟源选择 RMII 工作模式下的以太网 MAC 和 PHY 需要一个公共的 50MHz 同步时钟（即 RMII 时钟），它既可以由外部提供，也可以由内部的 ESP32 APLL 产生（不推荐）。

注解： 有关 RMII 时钟源选择的更多信息，请参见 ESP32-Ethernet-Kit V1.2 以太网母板（A 板）原理图，第 2 页的位置 D2。

PHY 侧提供 RMII 时钟 ESP32-Ethernet-Kit 默认配置为 IP101GRI 的 50M_CLKO 信号线提供 RMII 时钟，该时钟信号由 PHY 外侧连接的 25 MHz 无源晶振经过倍频产生。详情请参见下图。

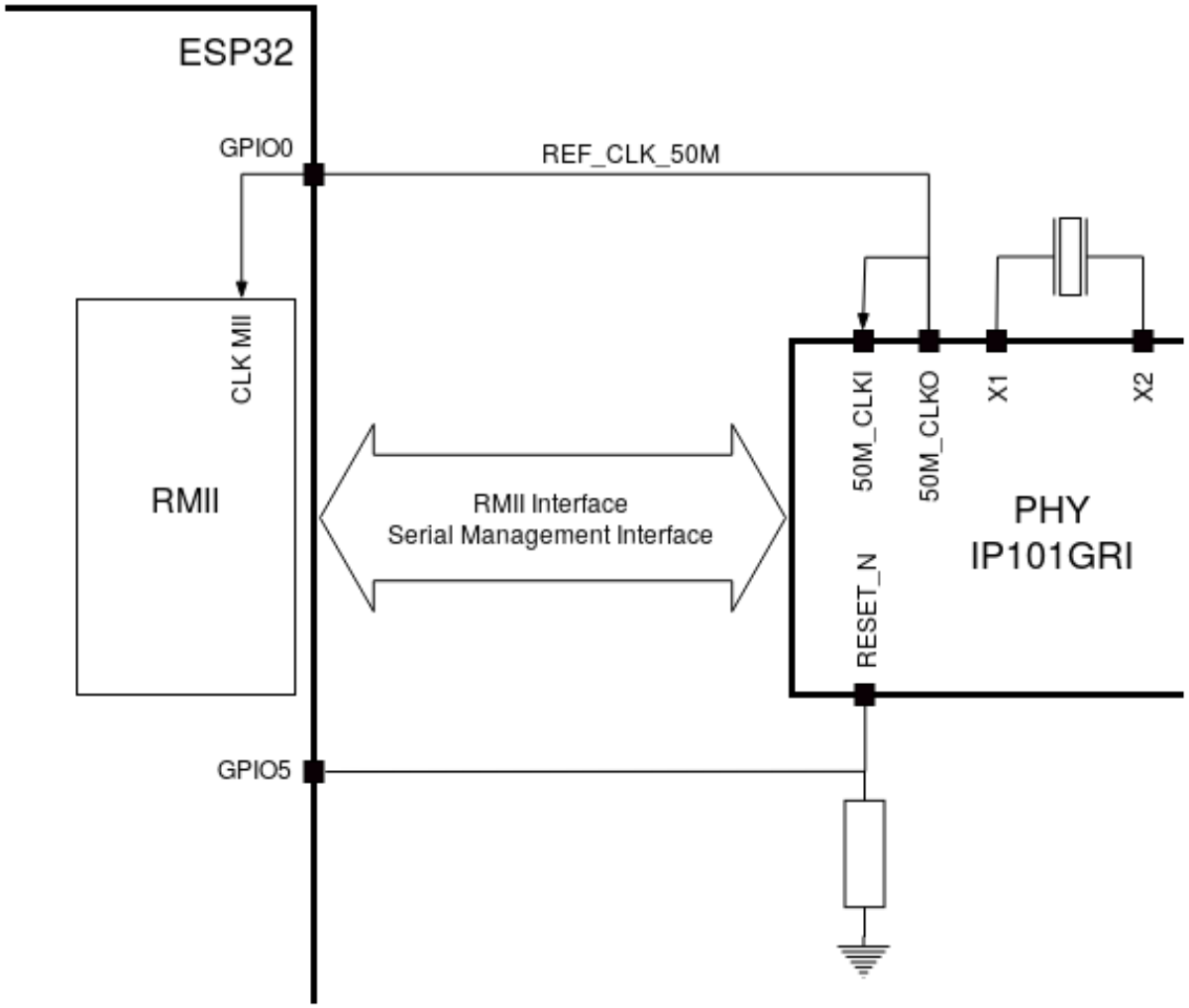

图 21: PHY 侧提供 RMII 时钟

请注意，系统上电时 RESET_N 旁的下拉电阻会将 PHY 置于复位状态，ESP32 需要通过 GPIO5 将 RESET_N 拉高才能启动 PHY，只有这样才能保证系统的正常上电，否则 ESP32 会存在一定几率进入下载模式（当 REF_CLK_50M 时钟信号在 GPIO0 上电采样阶段刚好处于高电平）。

ESP32 APLL 内部提供的 RMII 时钟 另一种选择是从 ESP32 APLL 内部获取 RMII 时钟，请参见下图。来自 GPIO0 的时钟信号首先被反相，以解决传输线延迟的问题，然后提供给 PHY。

要实现此选项，用户需要在板子上移除或添加一些阻容元器件。有关详细信息，请参见 ESP32-Ethernet-Kit V1.2 以太网母板（A 板）原理图，第 2 页，位置 D2。请注意，如果 APLL 已经用于其他用途（如 I2S 外设），那么只能使用外部 RMII 时钟。

GPIO 分配

本节介绍了 ESP32-Ethernet-Kit 开发板特定接口或功能的 GPIO 分配情况。

IP101GRI (PHY) 接口 下表显示了 ESP32 (MAC) 与 IP101GRI (PHY) 的管脚对应关系。ESP32-Ethernet-Kit 的实现默认设置为简化媒体独立接口。

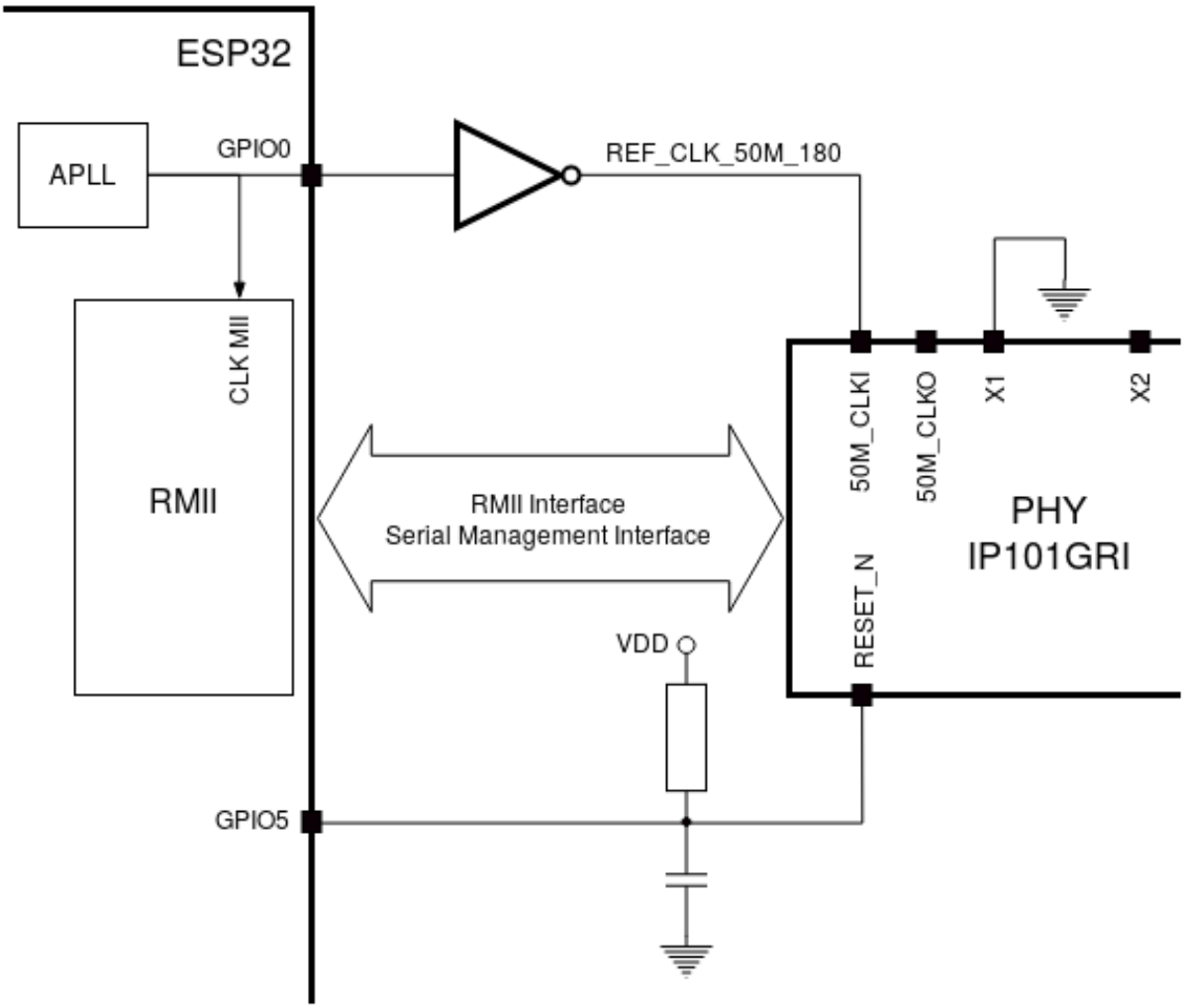

图 22: ESP32 APLL 内部提供的 RMII 时钟

No.	ESP32 管脚 (MAC)	IP101GRI (PHY)
RMII 接口		
1	GPIO21	TX_EN
2	GPIO19	TXD[0]
3	GPIO22	TXD[1]
4	GPIO25	RXD[0]
5	GPIO26	RXD[1]
6	GPIO27	CRS_DV
7	GPIO0	REF_CLK
串行管理接口		
8	GPIO23	MDC
9	GPIO18	MDIO
PHY 复位		
10	GPIO5	Reset_N

注解： ESP32 的 *RMII* 接口下的所有管脚分配都是固定的，不能通过 IOMUX 或 GPIO 矩阵进行更改。REF_CLK 仅可选择 GPIO0、GPIO16 或 GPIO17，且不可通过 GPIO 矩阵进行更改。

GPIO Header 1 本连接器包括 ESP32-Ethernet-Kit 开发板上部分不用做他用的 GPIO。

No.	ESP32 管脚
1	GPIO32
2	GPIO33
3	GPIO34
4	GPIO35
5	GPIO36
6	GPIO39

GPIO Header 2 根据“说明”描述的不同情形，本连接器包含可用做他用的 GPIO。

No.	ESP32 管脚	说明
1	GPIO17	见下方说明 1
2	GPIO16	见下方说明 1
3	GPIO4	
4	GPIO2	
5	GPIO13	见下方说明 2
6	GPIO12	见下方说明 2
7	GPIO15	见下方说明 2
8	GPIO14	见下方说明 2
9	GND	Ground
10	3V3	3.3 V 电源

注解：

1. ESP32 芯片的 GPIO16 和 GPIO17 管脚没有引出至 ESP32-WROVER-E 模组的管脚，因此无法使用。如需使用 ESP32 的 GP1016 和 GPIO17 管脚，建议更换其他不含 PSRAM 的模组，比如 ESP32-WROOM-32D 或 ESP32-SOLO-1。
2. 具体功能取决与功能选择开关 的设置。

GPIO 管脚分配总结

ESP32-WROVER-E	IP101GRI	UART	JTAG	GPIO	Comments
S_VP				IO36	
S_VN				IO39	
IO34				IO34	
IO35				IO35	
IO32				IO32	
IO33				IO33	
IO25	RXD[0]				
IO26	RXD[1]				
IO27	CRS_DV				
IO14			TMS	IO14	
IO12			TDI	IO12	
IO13			TCK	IO13	
IO15			TDO	IO15	
IO2				IO2	
IO0	REF_CLK				See note 1
IO4				IO4	
IO16				IO16 (NC)	See note 2
IO17				IO17 (NC)	See note 2
IO5	Reset_N				See note 1
IO18	MDIO				
IO19	TXD[0]				
IO21	TX_EN				
RXD0		RXD			
TXD0		TXD			
IO22	TXD[1]				
IO23	MDC				

注解:

1. 为防止 ESP32 侧 GPIO0 的上电状态受 PHY 侧时钟输出的影响，PHY 侧 RESET_N 默认为低，以关闭 PHY 侧时钟输出。上电后，您可通过 GPIO5 控制 RESET_N 以打开该时钟输出。参见*PHY 侧提供 RMII 时钟*。对于无法通过 RESET_N 关闭时钟输出的 PHY，PHY 侧建议使用可在外部禁用/使能的有源晶振。与使用 RESET_N 类似，默认情况下晶振模块应禁用，并在上电后由 ESP32 开启。有关参考设计，请参见 ESP32-Ethernet-Kit V1.2 以太网母板（A 板）原理图。
2. ESP32 芯片的 GPIO16 和 GPIO17 管脚没有引出至 ESP32-WROVER-E 模组的管脚，因此无法使用。如需使用 ESP32 的 GP1016 和 GPIO17 管脚，建议更换其他不含 PSRAM 的模组，比如 ESP32-WROOM-32D 或 ESP32-SOLO-1。

应用程序开发

ESP32-Ethernet-Kit 上电前，请首先确认开发板完好无损。

初始设置

1. 首先，请将*以太网母板（A 板）* 上的所有开关均拨至 **ON** 状态，使 **功能选择开关**处于默认状态。
2. 为了方便应用程序的下载和测试，不要为开发板输入任何信号。
3. 此时可以连接*PoE 子板（B 板）* ，但不要向 B 板连接任何外部电源。
4. 使用 USB 数据线将*以太网母板（A 板）* 连接至 PC。
5. 将 **电源开关**从 GND 拨至 5V0 一侧。此时，**5V Power On LED** 应点亮。

正式开始开发 现在，请前往*快速入门* 中的*详细安装步骤* 章节，查看如何设置开发环境，并尝试将示例项目烧录至您的开发板。

请务必在进入下一步前，确保您已完成上述所有步骤。

配置与加载以太网示例 在完成开发环境设置和开发板测试后，您可以配置并烧录 ethernet/basic 示例。本示例专门用于测试以太网功能，支持不同 PHY，包括*ESP32-Ethernet-Kit V1.2（点击放大）* 开发板使用的 **IP101GRI** 。

针对 ESP32-Ethernet-Kit V1.1 的主要修改：

- 更正拨码开关周围 GPIO 编号丝印。
- C1、C2、C42 和 C43 更新为 20 pF。详细信息见 ESP32-Ethernet-Kit V1.2 以太网母板（A 板）原理图。
- 模组 ESP32-WROVER-B 替换为 ESP32-WROVER-E。

ESP32-Ethernet-Kit 的其他版本

- *ESP32-Ethernet-Kit V1.0 入门指南*
- *ESP32-Ethernet-Kit V1.1 入门指南*

相关文档

- ESP32-Ethernet-Kit V1.2 以太网母板（A 板）原理图 (PDF)
- ESP32-Ethernet-Kit PoE 子板（B 板）原理图 (PDF)
- ESP32-Ethernet-Kit V1.2 以太网母板（A 板）PCB 布局图 (PDF)
- ESP32-Ethernet-Kit PoE 子板（B 板）PCB 布局图 (PDF)
- ESP32 技术规格书 (PDF)
- ESP32-WROVER-E 技术规格书 (PDF)
- *JTAG 调试*
- *ESP32 H/W 硬件参考*

有关本开发板的更多设计文档，请联系我们的商务部门 sales@espressif.com。

ESP32-Ethernet-Kit V1.0 入门指南 本指南介绍了如何使用 ESP32-Ethernet-Kit 开发板以及配置相关功能。

ESP32-Ethernet-Kit 是一款以太网转 Wi-Fi 开发板，可为以太网设备赋予 Wi-Fi 连接功能。为了提供更灵活的电源选项，ESP32-Ethernet-Kit 也同时支持以太网供电 (PoE)。

准备工作

- *ESP32-Ethernet-Kit V1.0 开发板*
- USB 数据线（A 转 Micro-B）
- PC（Windows、Linux 或 Mac OS）

您可以跳过介绍部分，直接前往*应用程序开发* 章节。

概述 ESP32-Ethernet-Kit 是一款来自 乐鑫 的开发板，由以太网母板（A 板）和 PoE 子板（B 板）两部分组成。其中*以太网母板（A 板）* 贴蓝牙 / Wi-Fi 双模 ESP32-WROVER-B 模组和单端口 10/100 快速以太网收发器 (PHY) IP101GRI。*PoE 子板（B 板）* 提供以太网供电功能。ESP32-Ethernet-Kit 的 A 板可在不连接 B 板的情况下独立工作。

为了实现程序下载和监控，A 板还集成了一款先进多协议 USB 桥接器（FTDI FT2232H 芯片），进而允许开发人员直接通过 USB 接口，使用 JTAG 对 ESP32 进行调试，无需额外的 JTAG 适配器。

功能概述 ESP32-Ethernet-Kit 开发板的主要组件和连接方式见下。

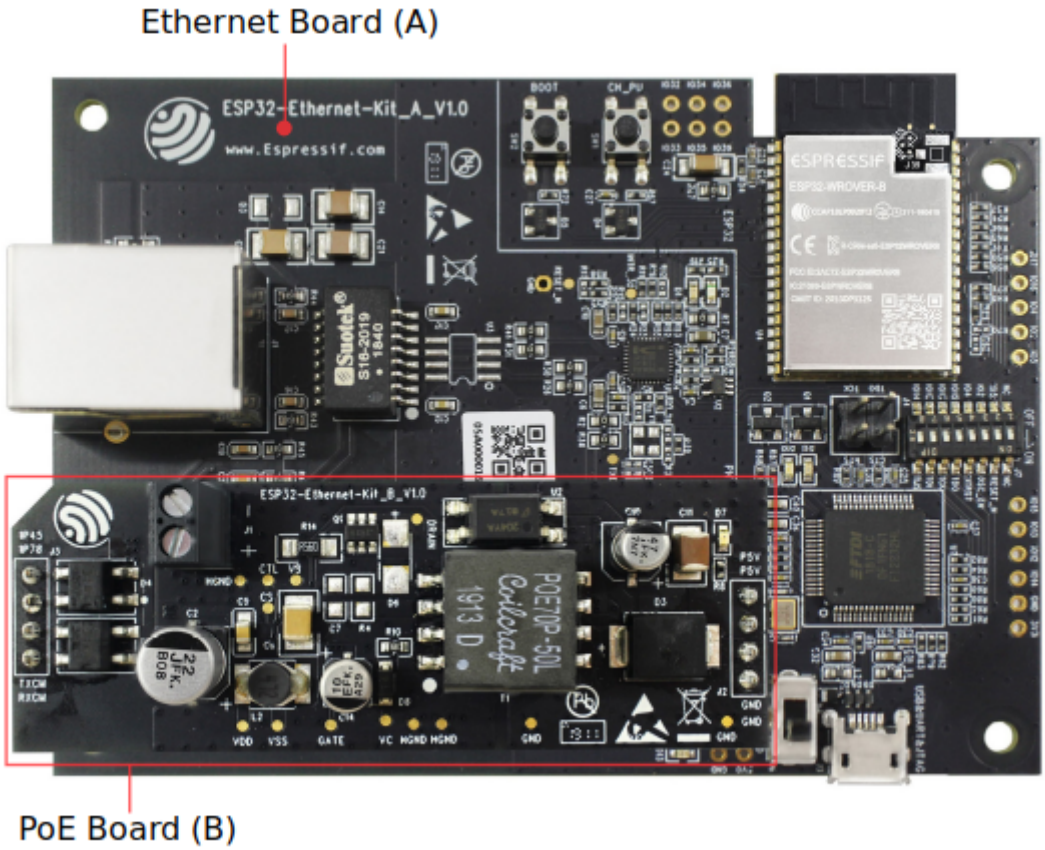

图 23: ESP32-Ethernet-Kit V1.0

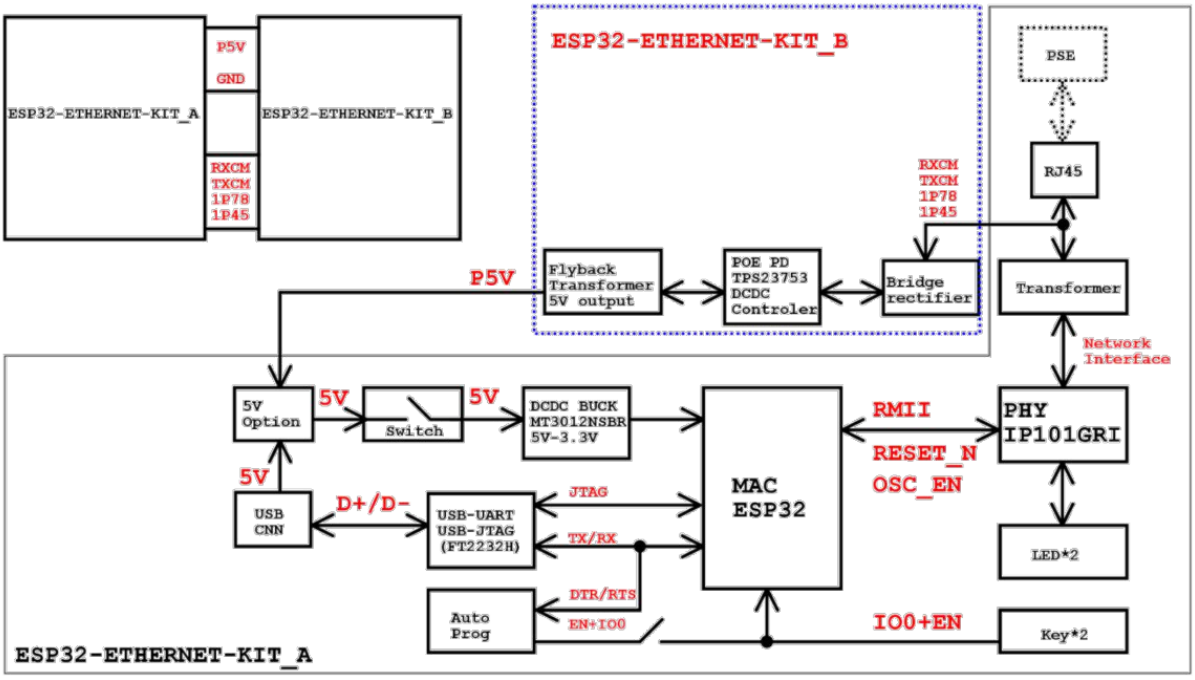

图 24: ESP32-Ethernet-Kit 功能框图（点击放大）

功能说明 ESP32-Ethernet-Kit 开发板的主要组件、接口及控制方式见下。

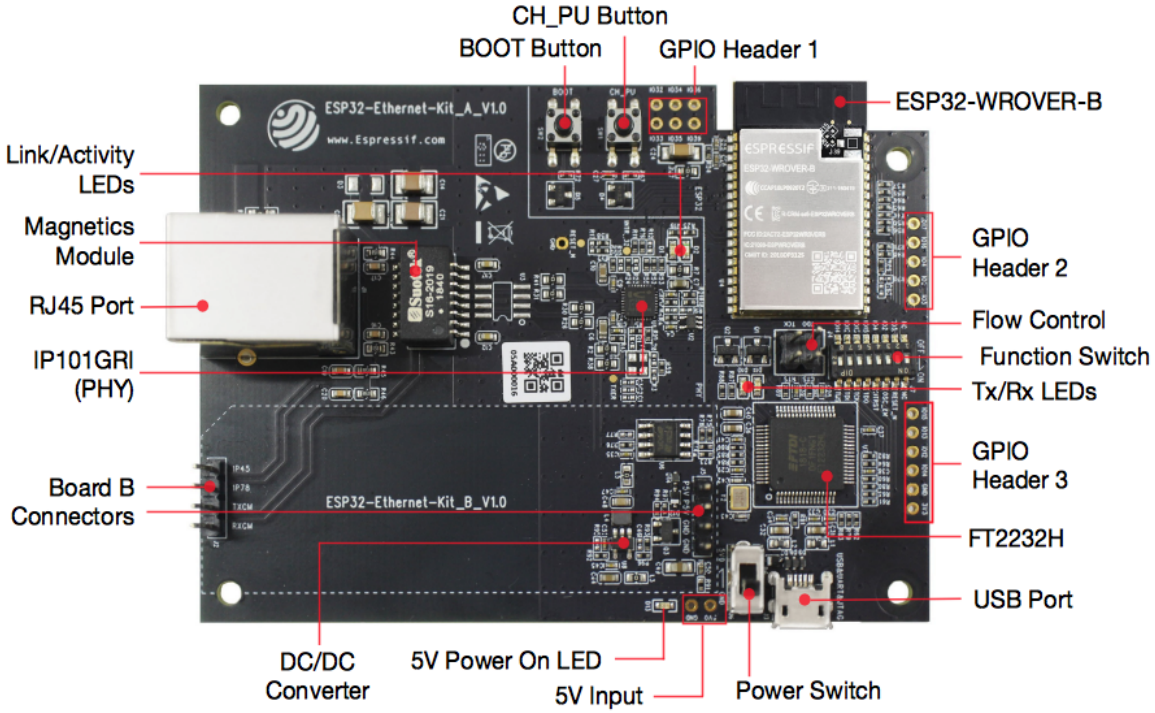

图 25: ESP32-Ethernet-Kit - 以太网母板（A 板）布局（点击放大）

以太网母板（A 板） 下表将从图片右上角开始，以顺时针顺序介绍图中的主要组件。

主要组件	基本介绍
ESP32-WROVER-B 模组	这款 ESP32 模组内置 64-Mbit PSRAM，可提供灵活的额外存储空间和数据处理能力。
GPIO Header 2	由 5 个未引出通孔组成，可连接至 ESP32 的部分 GPIO。具体介绍，请见*GPIO Header 2*。
流控	跳线帽，可接入开发板信号。具体介绍，请见流控。
功能选择开关	DIP 开关，可配置 ESP32 部分 GPIO 的功能。具体介绍，请见功能选择开关。
Tx/Rx LED	2 个 LED，可显示 UART 传输的状态。
GPIO Header 3	可连接至 ESP32 的部分 GPIO，根据功能选择开关 的位置有不同功能。
FT2232H	FT2232H 多协议 USB 转串口桥接器。开发人员可通过 USB 接口对 FT2232H 芯片进行控制和编程，与 ESP32 建立连接。FT2232H 芯片可在通道 A 提供 USB-to-JTAG 接口功能，并在通道 B 提供 USB-to-Serial 接口功能，便利开发人员的应用开发与调试。见 ESP32-Ethernet-Kit V1.0 以太网母板（A 板）原理图。
USB 端口	USB 接口。可用作开发板的供电电源，或连接 PC 和开发板的通信接口。
电源开关	电源开关。拨向 **Boot** 按键一侧，开发板上电；拨离 **Boot** 按键一侧，开发板掉电。
5V Input	5V 电源接口建议仅在开发板自动运行（未连接 PC）时使用。仅用于全负荷工作下的后备电源。
5V Power On LED	当开发板通电后（USB 或外部 5V 供电），该红色指示灯将亮起。
DC/DC 转换器	直流 5 V 转 3.3 V，输出电流高达 2 A。
B 板连接器	1 对 2 针排针，用于连接*PoE 子板（B 板）*。
IP101GRI (PHY)	物理层 (PHY) 单端口 10/100 快速以太网收发器 IP101GRI，允许开发人员实现与以太网线缆的物理层连接。PHY 与 ESP32 通过简化媒体独立接口 (RMII) 实现连接。RMII 是 媒体独立接口 (MII) 的简化版本。PHY 可在 10/100 Mbps 速率下支持 IEEE 802.3 / 802.3u 标准。
RJ45 端口	以太网数据传输端口。
网络变压器	网络变压器属于以太网物理层的一部分，可保护电路免受故障和电压瞬变影响，包括防止收发器芯片和线缆之间产生共模信号。同时它也可以在收发器与以太网设备之间提供电流隔绝。
Link/Activity LED	2 个 LED（绿色和红色），可分别显示 PHY 处于“Link”状态或“Activity”状态。
BOOT 按键	下载按键。按下 **BOOT** 键并保持，同时按一下 **EN** 键（此时不要松开 **BOOT** 键）进入“固件下载”模式，通过串口下载固件。
CH_PU 按键	复位按键。
GPIO Header 1	由 6 个未引出通孔组成，可连接至 ESP32 的备用 GPIO。具体介绍，请见*GPIO Header 1*。

PoE 子板（B 板） PoE 子板通过以太网电缆传输电能 (PoE)，为以太网母板（A 板）提供电源。PoE 子板（B 板）的主要组件见功能概述 中的功能框图。

PoE 子板（B 板）具有以下特性：

- 支持 IEEE 802.3at
- 电源输出：5 V，1.4 A

如需使用 PoE 功能，请用以太网线缆将以太网母板（A 板）上的 **RJ45 端口**连接至 PoE 的交换机。太网母板（A 板）检测到来自 PoE 子板（B 板）的 5 V 供电后，将从 USB 供电自动切换至 PoE 供电。

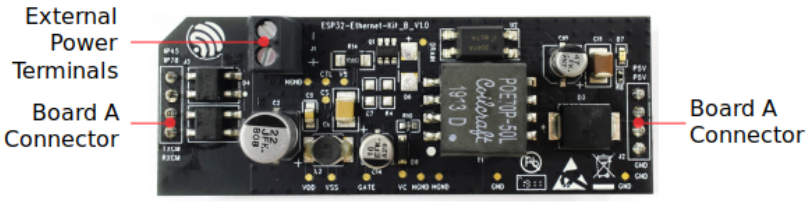

图 26: ESP32-Ethernet-Kit - PoE 子板（B 板）布局（点击放大）

主要组件	基本介绍
A 板连接器	1 个 4 针排母，用于将 B 板连接至*以太网母板（A 板）*。
外部电源终端	PoE 子板（B 板）备用电源。

设置选项 本节介绍用于 ESP32-Ethernet-Kit 开发板的硬件配置选项。

功能选择开关 用户可使用 **功能选择开关**配置特定 GPIO 管脚的功能。

DIP SW	GPIO 管脚	管脚功能（DIP SW 开启状态）
1.	GPIO14	连接至 FT2232H，提供 JTAG 功能
2.	GPIO12	连接至 FT2232H，提供 JTAG 功能
3.	GPIO13	连接至 FT2232H，提供 JTAG 功能
4.	GPIO15	连接至 FT2232H，提供 JTAG 功能
5.	GPIO4	连接至 FT2232H，提供 JTAG 功能
6.	GPIO2	连接至板上 25 MHz 晶振
7.	GPIO5	连接至 IP101GRI 的 RESET_N 输入
8.	n/a	

用户还可以关闭 DIP DW，将部分 GPIO 用于其他用途。

流控 2 x 2 跳线连接器，可用于 UART 流控功能。

.	信号	备注
1.	MTDO	GPIO13，见功能选择开关。
2.	MTCK	GPIO15，见功能选择开关。
3.	RTS	FT2232H 的 RTS 信号
4.	CTS	FT2232H 的 CTS 信号

GPIO 分配 本节介绍了 ESP32-Ethernet-Kit 开发板特定接口或功能的 GPIO 分配情况。

IP101GRI (PHY) 接口 ESP32 (MAC) 与 IP101GRI (PHY) 的管脚对应关系见下：

.	ESP32 管脚 (MAC)	IP101GRI (PHY)
RMII 接口		
1.	GPIO21	TX_EN
2.	GPIO19	TXD[0]
3.	GPIO22	TXD[1]
4.	GPIO25	RXD[0]
5.	GPIO26	RXD[1]
6.	GPIO27	CRS_DV
7.	GPIO0	REF_CLK
串行管理接口		
8	GPIO23	MDC
9	GPIO18	MDIO
PHY 复位		
10	GPIO5	Reset_N

注解： 除了 REF_CLK 之外，*RMII 接口*下的所有管脚分配都是固定的，不能通过 IOMUX 或 GPIO 矩阵进行更改。

GPIO Header 1 本连接器包括 ESP32-Ethernet-Kit 开发板上部分不用做他用的 GPIO。

.	ESP32 管脚
1.	GPIO32
2.	GPIO33
3.	GPIO34
4.	GPIO35
5.	GPIO36
6.	GPIO39

GPIO Header 2 本连接器包括具有特定 MII 功能的 GPIO（GPIO2 除外）。根据具体情况，部分以太网应用程序可能需要使用此功能。

.	ESP32 管脚	MII 功能	说明
1.	GPIO17	EMAC_CLK_180	见说明 1。
2.	GPIO16	EMAC_CLK_OUT	见说明 1。
3.	GPIO4	EMAC_TX_ER	
4.	GPIO2	n/a	见说明 2。
5.	GPIO5	EMAC_RX_CLK	见说明 2。

注解:

1. ESP32 芯片的 GPIO16 和 GPIO17 管脚没有引出至 ESP32-WROVER-B 模组的管脚，因此无法使用。如需使用 ESP32 的 GP1016 和 GPIO17 管脚，建议更换其他不含 SPIRAM 的模组，比如 ESP32-WROOM-32D 或 ESP32-SOLO-1。
2. 具体功能取决于功能选择开关 的设置。

GPIO Header 3 本连接器中 GPIO 的功能取决于功能选择开关 的设置。

.	ESP32 管脚
1.	GPIO15
2.	GPIO13
3.	GPIO12
4.	GPIO14
5.	GND
6.	3V3

GPIO 管脚分配

ESP32-WROVER-B	IP101GRI	UART	JTAG	GPIO	说明
S_VP				IO36	
S_VN				IO39	
IO34				IO34	
IO35				IO35	
IO32				IO32	
IO33				IO33	
IO25	RXD[0]				
IO26	RXD[1]				
IO27	CRS_DV				
IO14			TMS	IO14	
IO12			TDI	IO12	
IO13		RTS	TCK	IO13	
IO15		CTS	TDO	IO15	
IO2				IO2	见下方说明 1 和说明 3。
IO0	REF_CLK				见下方说明 2 和说明 3。
IO4			nTRST	IO4	
IO16				IO16 (NC)	见下方说明 4。
IO17				IO17 (NC)	见下方说明 4。
IO5	Reset_N			IO5	
IO18	MDIO				
IO19	TXD[0]				
IO21	TX_EN				
RXD0		RXD			
TXD0		TXD			
IO22	TXD[1]				
IO23	MDC				

注解:

1. GPIO2 用于使能 PHY 的外部振荡器。
2. GPIO0 用于为 PHY 提供 50 MHz 基准时钟源。为了防止传输线路延迟对时钟相位带来的影响，该时钟信号将首先被反相，而后提供给 PHY。
3. 为防止 PHY 端 GPIO0 的上电状态受到时钟输出的影响，PHY 的外部晶振将在 ESP32 上电后通过 GPIO2 使能。

4. ESP32 芯片的 GPIO16 和 GPIO17 管脚没有引出至 ESP32-WROVER-B 模组的管脚，因此无法使用。如需使用 ESP32 的 GP1016 和 GPIO17 管脚，建议更换其他不含 SPIRAM 的模组，比如 ESP32-WROOM-32D 或 ESP32-SOLO-1。

应用程序开发 ESP32-Ethernet-Kit 上电前，请首先确认开发板完好无损。

初始设置

1. 首先，请将*以太网母板（A 板）* 上的所有开关均拨至 **ON** 状态，即使 **功能选择开关**处于默认状态。
2. 为了方便应用程序的下载和测试，此时请不要在开发板安装任何跳线帽，也不要为开发板接入任何信号。
3. 此时可以连接*PoE 子板（B 板）*，但不要向 B 板连接任何外部电源。
4. 使用 USB 数据线将*以太网母板（A 板）* 连接至 PC。
5. 将 **电源开关**从 GND 拨至 5V0 一侧。此时，**5V Power On LED** 应点亮。

正式开始开发 现在，请前往快速入门 中的详细安装步骤 章节，查看如何设置开发环境，并尝试将示例项目烧录至您的开发板。

如需使用较早 GNU Make 编译系统，则请参考详细安装步骤 章节。

请务必在进入下一步前，确保您已完成上述所有步骤。

配置与加载以太网示例 在完成开发环境设置和开发板测试后，您可以配置并烧录 ethernet/basic 示例。本示例专门用于测试以太网功能，支持不同 PHY，包括*ESP32-Ethernet-Kit V1.0 开发板* 使用的 **IP101GRI**。

相关文档

- ESP32-Ethernet-Kit V1.0 以太网母板（A 板）原理图 (PDF)
- ESP32-Ethernet-Kit V1.0 PoE 子板（B 板）原理图 (PDF)
- 《ESP32 技术规格书》 (PDF)
- 《ESP32-WROVER-B 技术规格书》 (PDF)
- *JTAG 调试*
- *ESP32 H/W 硬件参考*

有关本开发板的更多设计文档，请联系我们的商务部门 sales@espressif.com。

ESP32-Ethernet-Kit V1.1 入门指南 本指南将介绍 ESP32-Ethernet-Kit 开发板的配置以及相关功能的使用。

ESP32-Ethernet-Kit 是一款以太网转 Wi-Fi 开发板，可为以太网设备赋予 Wi-Fi 连接功能。为了提供更灵活的电源选项，ESP32-Ethernet-Kit 同时也支持以太网供电 (PoE)。

准备工作

- *ESP32-Ethernet-Kit V1.1 开发板*
- USB 数据线（A 转 Micro-B）
- PC（Windows、Linux 或 Mac OS）

您可以跳过介绍部分，直接前往应用程序开发 章节。

概述 ESP32-Ethernet-Kit 是一款来自 乐鑫 的开发板。

它由*以太网母板（A 板）* 和*PoE 子板（B 板）* 两部分组成。其中*以太网母板（A 板）* 集成蓝牙 / Wi-Fi 双模 ESP32-WROVER-B 模组和单端口 10/100 Mbps 快速以太网收发器 (PHY) IP101GRI。*PoE 子板（B 板）* 提供以太网供电功能。ESP32-Ethernet-Kit 的 A 板可在不连接 B 板的情况下独立工作。

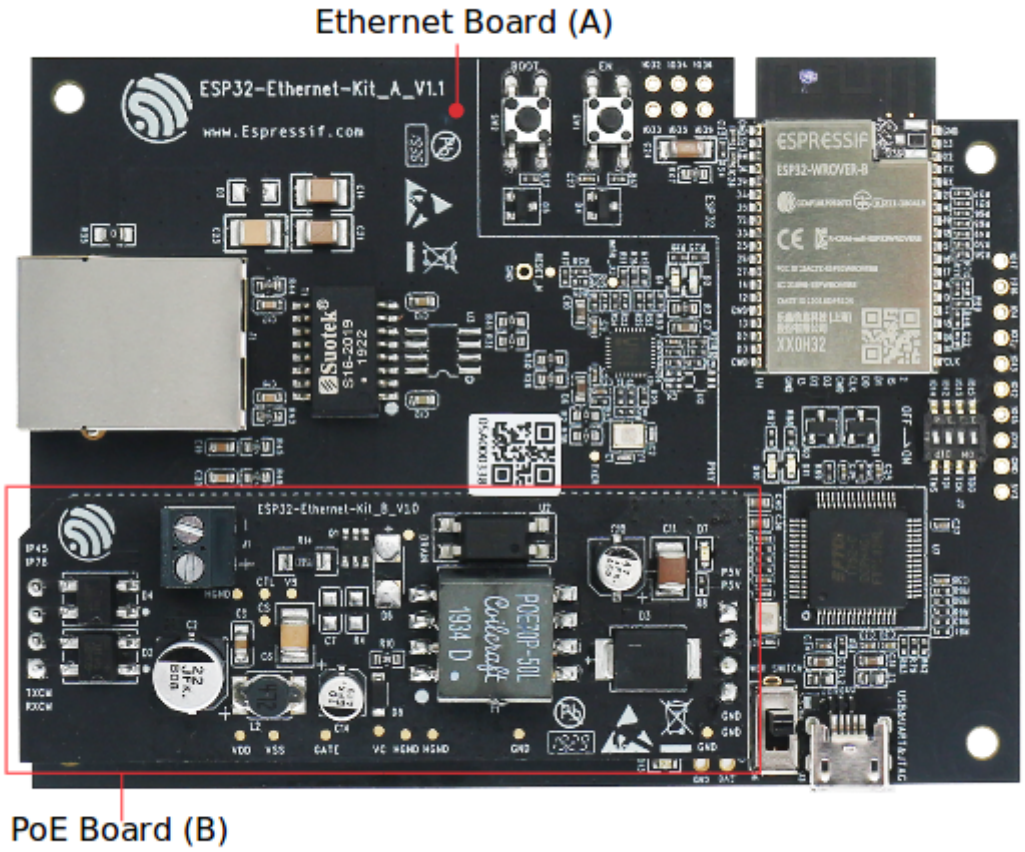

图 27: ESP32-Ethernet-Kit V1.1

为了实现程序下载和监控，A 板还集成了一款先进多协议 USB 桥接器（FTDI FT2232H 芯片）。FTDI FT2232H 芯片使得开发人员无需额外的 JTAG 适配器，通过 USB 桥接器使用 JTAG 接口便可对 ESP32 直接进行调试。

功能概述 ESP32-Ethernet-Kit 开发板的主要组件和连接方式如下。

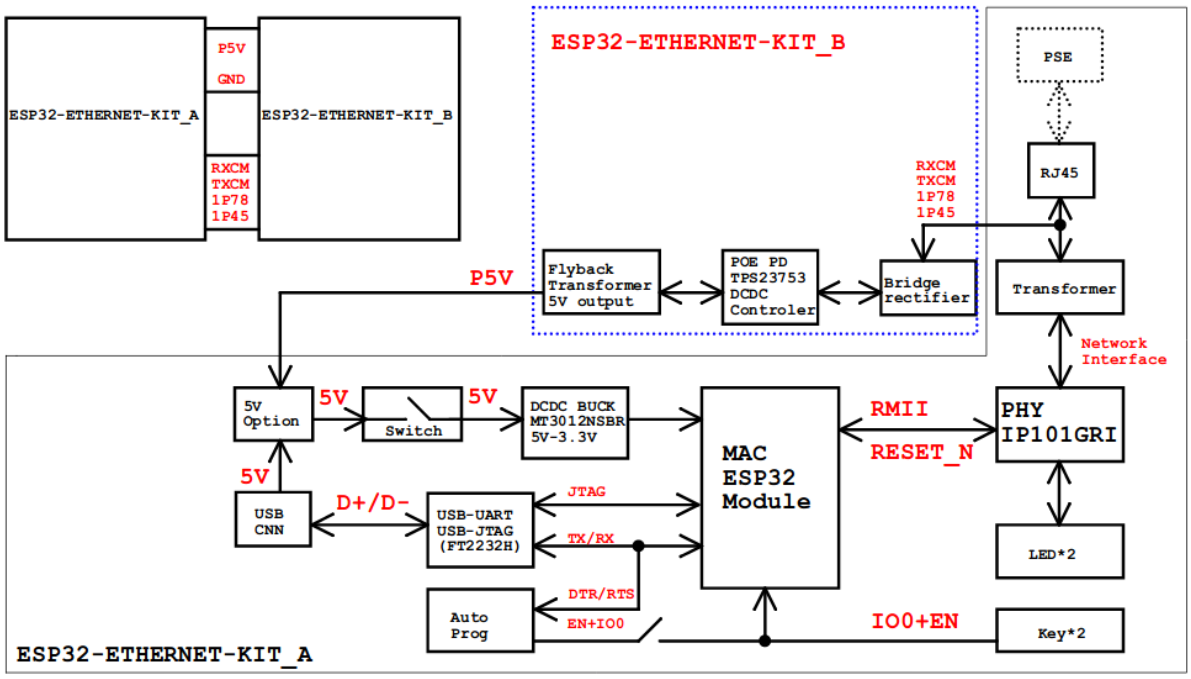

图 28: ESP32-Ethernet-Kit 功能框图（点击放大）

功能说明 有关 ESP32-Ethernet-Kit 开发板的主要组件、接口及控制方式，请见下方的图片和表格。

以太网母板（A 板） 下表将从图片右上角开始，以顺时针顺序介绍图中的主要组件。

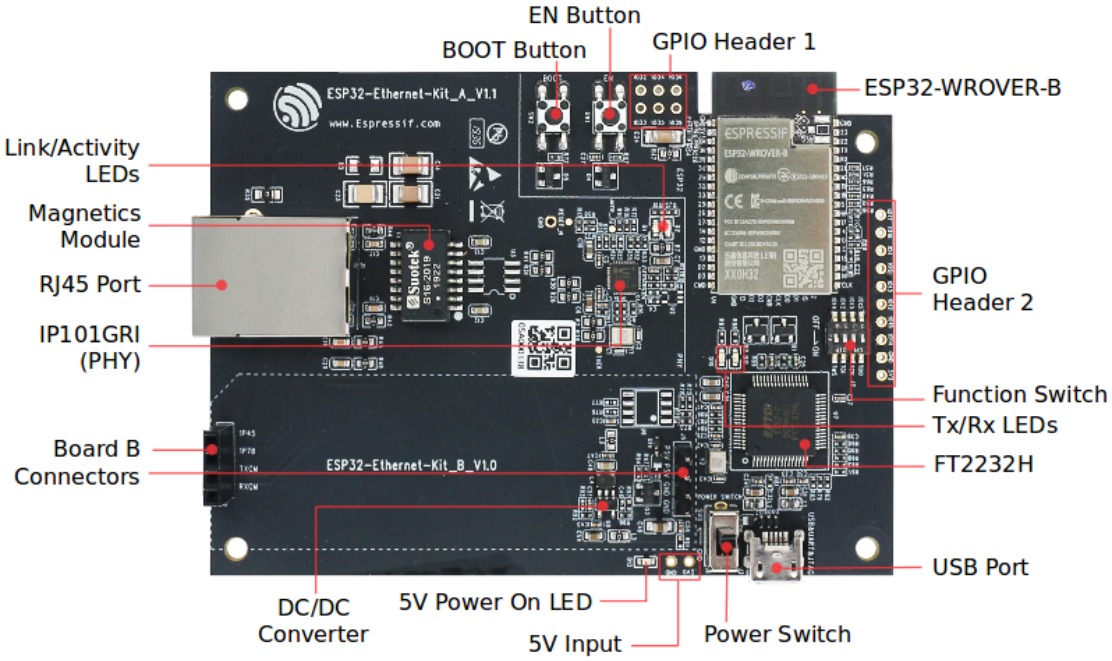

图 29: ESP32-Ethernet-Kit - 以太网母板（A 板）布局（点击放大）（请更新图片）

表 3: 表格 1 组件介绍

主要组件	基本介绍
ESP32-WROVER-B 模组	这款 ESP32 模组内置 64-Mbit PSRAM，可提供灵活的额外存储空间和数据处理能力。
GPIO Header 2	由 5 个未引出通孔组成，可连接至 ESP32 的部分 GPIO。具体介绍，请见*GPIO Header 2*。
功能选择开关	一个 4 位拨码开关，可配置 ESP32 部分 GPIO 的功能。请注意，拨码开关旁边开发板的丝印层上的 GPIO 管脚标记的位置是不正确的。有关详细信息和正确的管脚分配，请见*功能选择开关*。
Tx/Rx LEDs	2 个 LED，可显示 UART 传输的状态。
FT2232H	FT2232H 多协议 USB 转串口桥接器。开发人员可通过 USB 接口对 FT2232H 芯片进行控制和编程，与 ESP32 建立连接。FT2232H 芯片可在通道 A 提供 USB-to-JTAG 接口功能，并在通道 B 提供 USB-to-Serial 接口功能，便利开发人员的应用开发与调试。见 ESP32-Ethernet-Kit V1.1 以太网母板（A 板）原理图。
USB 端口	USB 接口。可用作开发板的供电电源，或连接 PC 和开发板的通信接口。
电源开关	电源开关。拨向 **5V0** 按键侧，开发板上电；拨向 **GND** 按键一侧，开发板掉电。
5V Input	5V 电源接口建议仅在开发板自动运行（未连接 PC）时使用。
5V Power On LED	当开发板通电后（USB 或外部 5V 供电），该红色指示灯将亮起。
DC/DC 转换器	直流 5 V 转 3.3 V，输出电流最高可达 2 A。
Board B 连接器	1 对排针和排母，用于连接*PoE 子板（B 板）*。
IP101GRI (PHY)	物理层 (PHY) 单端口 10/100 快速以太网收发器 IP101GRI 芯片，允许开发人员实现与以太网线缆的物理层连接。PHY 与 ESP32 通过简化媒体独立接口 (RMII) 实现连接。RMII 是 媒体独立接口 (MII) 的标准简化版本。PHY 可在 10/100 Mbps 速率下支持 IEEE 802.3 / 802.3u 标准。
RJ45 端口	以太网数据传输端口。
网络变压器	网络变压器属于以太网物理层的一部分，可保护电路，使其免受故障和电压瞬变影响，包括防止收发器芯片和线缆之间产生共模信号。同时它也可以在收发器与以太网设备之间提供电流隔绝。
Link/Activity LED	2 个 LED（绿色和红色），可分别显示 PHY 处于 “Link” 状态或 “Activity” 状态。
BOOT Button	下载按键。按下 **BOOT** 键并保持，同时按一下 **EN** 键（此时不要松开 **BOOT** 键）进入 “固件下载” 模式，通过串口下载固件。
EN 按键	复位按键。
GPIO Header 1	由 6 个未引出通孔组成，可连接至 ESP32 的备用 GPIO。具体介绍，请见*GPIO Header 1*。

PoE 子板（B 板） PoE 子板转换以太网电缆传输的电能 (PoE)，为以太网母板（A 板）提供电源。PoE 子板（B 板）的主要组件见功能概述 中的功能框图。

PoE 子板（B 板）具有以下特性：

- 支持 IEEE 802.3at 标准
- 电源输出：5 V，1.4 A

如需使用 PoE 功能，请用以太网线缆将以太网母板（A 板）上的 **RJ45 Port** 连接至 PoE 的交换机。以太网母板（A 板）检测到来自 PoE 子板（B 板）的 5 V 供电后，将从 USB 供电自动切换至 PoE 供电。

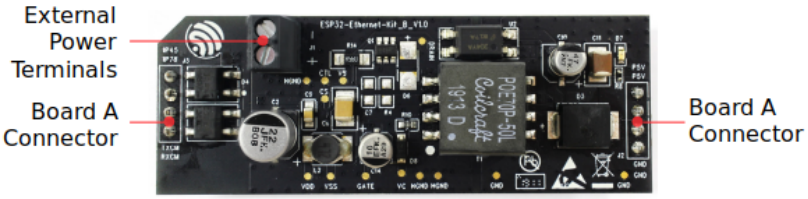

图 30: ESP32-Ethernet-Kit - PoE 子板（B 板）布局（点击放大）

表 4: 表格 2 PoE 子板（B 板）

主要组件	基本介绍
A 板连接器	4 个排针（左侧）和排母（右侧），用于将 PoE 子板（B 板）连接至*Ethernet board (A)*。左侧的管脚接受来自 PoE 交换机的电源。右侧的管脚为以太网母板（A 板）提供 5 V 电源。
外部电源终端	PoE 子板（B 板）可选电源 (26.6 ~ 54 V)。

设置选项 本节介绍用于 ESP32-Ethernet-Kit 开发板的硬件配置选项。

功能选择开关 拨码开关打开时，拨码开关将列出的 GPIO 路由到 FT2232H 以提供 JTAG 功能。拨码开关关闭时，GPIO 可以用于其他目的。

拨码开关	GPIO 管脚
1	GPIO13
2	GPIO12
3	GPIO15
4	GPIO14

注解： 拨码开关旁边开发板的丝印层上的 GPIO 管脚标记的位置是不正确的。请以表格中的顺序为准。

RMII 时钟源选择 RMII 工作模式下的以太网 MAC 和 PHY 需要一个公共的 50MHz 同步时钟（即 RMII 时钟），它既可以由外部提供，也可以由内部的 ESP32 APLL 产生。

注解： 有关 RMII 时钟源选择的更多信息，请参见 ESP32-Ethernet-Kit V1.1 以太网母板（A 板）原理图，第 2 页的位置 D2。

PHY 侧提供 RMII 时钟 ESP32-Ethernet-Kit 默认配置为 IP101GRI 的 50M_CLKO 信号线提供 RMII 时钟，该时钟信号由 PHY 外侧连接的 25MHz 无源晶振经过倍频产生。详情请参见下图。

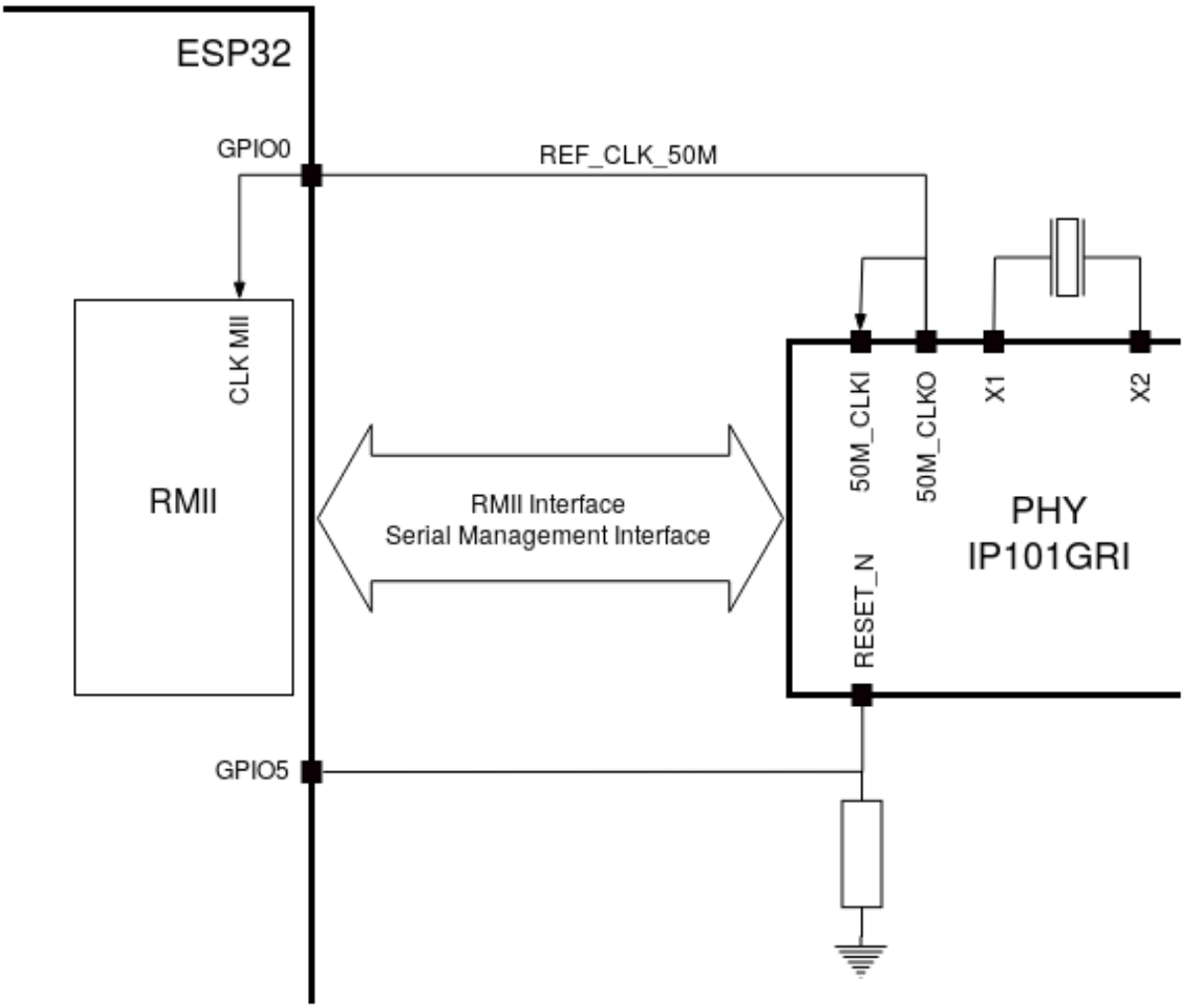

图 31: PHY 侧提供 RMII 时钟

请注意，系统上电时 RESET_N 旁的下拉电阻会将 PHY 置于复位状态，ESP32 需要通过 GPIO5 将 RESET_N 拉高才能启动 PHY，只有这样才能保证系统的正常上电，否则 ESP32 会存在一定几率进入下载模式（当 REF_CLK_50M 时钟信号在 GPIO0 上电采样阶段刚好处于高电平）。

ESP32 APLL 内部提供的 RMII 时钟 另一种选择是从 ESP32 APLL 内部获取 RMII 时钟，请参见下图。来自 GPIO0 的时钟信号首先被反相，以解决传输线延迟的问题，然后提供给 PHY。

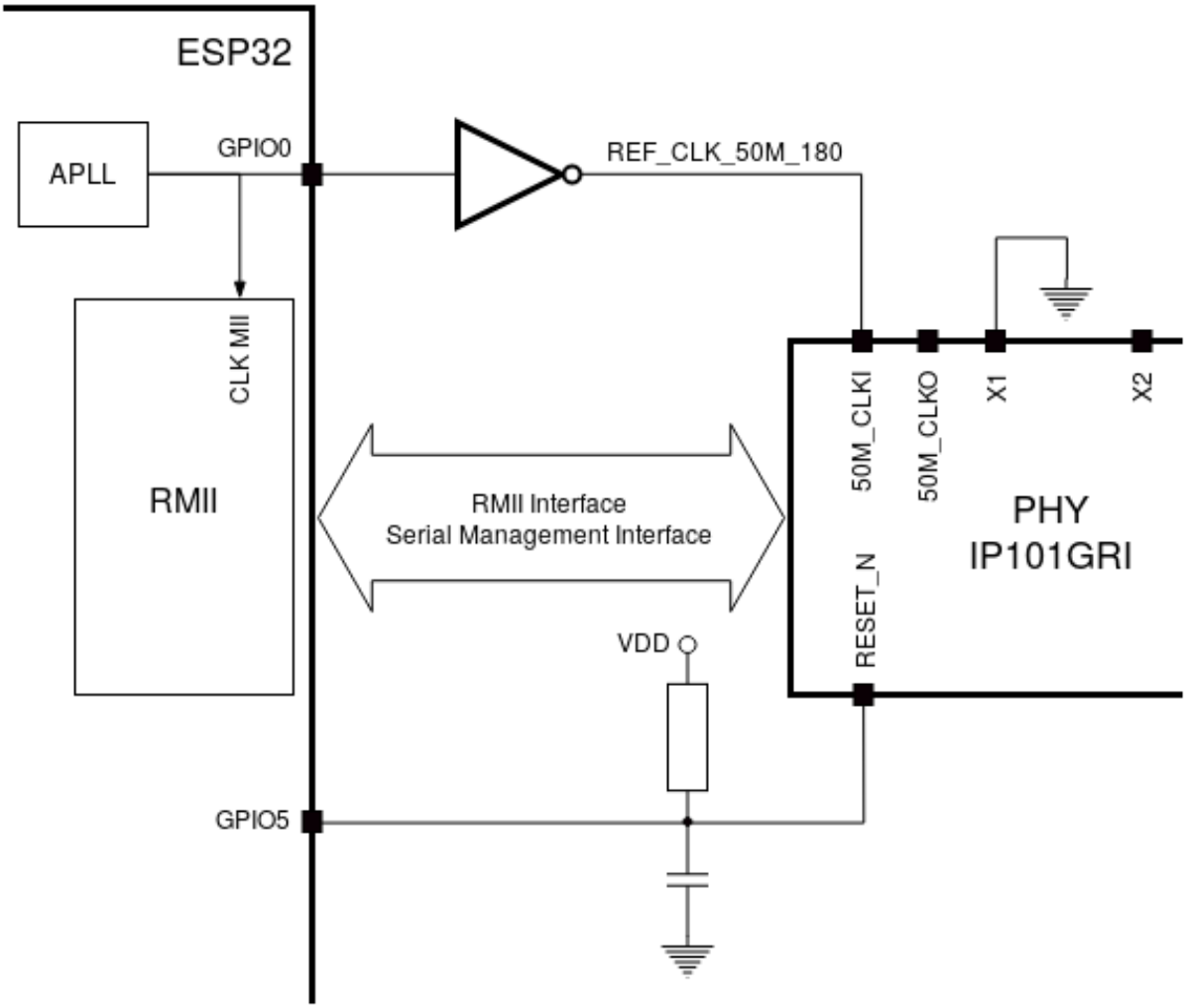

图 32: ESP32 APLL 内部提供的 RMII 时钟

要实现此选项，用户需要在板子上移除或添加一些阻容元器件。有关详细信息，请参见 ESP32-Ethernet-Kit V1.1 以太网母板（A 板）原理图，第 2 页，位置 D2。请注意，如果 APLL 已经用于其他用途（如 I2S 外设），那么只能使用外部 RMII 时钟。

GPIO 分配 本节介绍了 ESP32-Ethernet-Kit 开发板特定接口或功能的 GPIO 分配情况。

IP101GRI (PHY) 接口 下表显示了 ESP32 (MAC) 与 IP101GRI (PHY) 的管脚对应关系。ESP32-Ethernet-Kit 的实现默认设置为简化媒体独立接口。

.	ESP32 管脚 (MAC)	IP101GRI (PHY)
RMII 接口		
1	GPIO21	TX_EN
2	GPIO19	TXD[0]
3	GPIO22	TXD[1]
4	GPIO25	RXD[0]
5	GPIO26	RXD[1]
6	GPIO27	CRS_DV
7	GPIO0	REF_CLK
串行管理接口		
8	GPIO23	MDC
9	GPIO18	MDIO
PHY 复位		
10	GPIO5	Reset_N

注解： 除了 REF_CLK 之外，ESP32 的 *RMII* 接口下的所有管脚分配都是固定的，不能通过 IOMUX 或 GPIO 矩阵进行更改。

GPIO Header 1 本连接器包括 ESP32-Ethernet-Kit 开发板上部分不用做他用的 GPIO。

.	ESP32 管脚
1	GPIO32
2	GPIO33
3	GPIO34
4	GPIO35
5	GPIO36
6	GPIO39

GPIO Header 2 根据“说明”描述的不同情形，本连接器包含可用做他用的 GPIO。

.	ESP32 管脚	说明
1	GPIO17	见下方说明 1
2	GPIO16	见下方说明 1
3	GPIO4	
4	GPIO2	
5	GPIO13	见下方说明 2
6	GPIO12	见下方说明 2
7	GPIO15	见下方说明 2
8	GPIO14	见下方说明 2
9	GND	Ground
10	3V3	3.3 V 电源

注解：

1. ESP32 芯片的 GPIO16 和 GPIO17 管脚没有引出至 ESP32-WROVER-B 模组的管脚，因此无法使用。如需使用 ESP32 的 GP1016 和 GPIO17 管脚，建议更换其他不含 PSRAM 的模组，比如 ESP32-WROOM-32D 或 ESP32-SOLO-1。
2. 具体功能取决于功能选择开关 的设置。

GPIO 管脚分配总结

ESP32-WROVER-B	IP101GRI	UART	JTAG	GPIO	Comments
S_VP				IO36	
S_VN				IO39	
IO34				IO34	
IO35				IO35	
IO32				IO32	
IO33				IO33	
IO25	RXD[0]				
IO26	RXD[1]				
IO27	CRS_DV				
IO14			TMS	IO14	
IO12			TDI	IO12	
IO13		RTS	TCK	IO13	
IO15		CTS	TDO	IO15	
IO2				IO2	
IO0	REF_CLK				See note 1
IO4				IO4	
IO16				IO16 (NC)	See note 2
IO17				IO17 (NC)	See note 2
IO5	Reset_N				See note 1
IO18	MDIO				
IO19	TXD[0]				
IO21	TX_EN				
RXD0		RXD			
TXD0		TXD			
IO22	TXD[1]				
IO23	MDC				

注解:

1. 为防止 ESP32 侧 GPIO0 的上电状态受 PHY 侧时钟输出的影响，PHY 侧 RESET_N 默认为低，以关闭 PHY 侧时钟输出。上电后，您可通过 GPIO5 控制 RESET_N 以打开该时钟输出。参见*PHY 侧提供 RMII 时钟*。对于无法通过 RESET_N 关闭时钟输出的 PHY，PHY 侧建议使用可在外部禁用/使能的有源晶振。与使用 RESET_N 类似，默认情况下晶振模块应禁用，并在上电后由 ESP32 开启。有关参考设计，请参见 ESP32-Ethernet-Kit V1.1 以太网母板（A 板）原理图。
2. ESP32 芯片的 GPIO16 和 GPIO17 管脚没有引出至 ESP32-WROVER-B 模组的管脚，因此无法使用。如需使用 ESP32 的 GP1016 和 GPIO17 管脚，建议更换其他不含 PSRAM 的模组，比如 ESP32-WROOM-32D 或 ESP32-SOLO-1。

应用程序开发 ESP32-Ethernet-Kit 上电前，请首先确认开发板完好无损。

初始设置

1. 首先，请将*以太网母板（A 板）* 上的所有开关均拨至 **ON** 状态，使 **功能选择开关**处于默认状态。
2. 为了方便应用程序的下载和测试，不要为开发板输入任何信号。
3. 此时可以连接*PoE 子板（B 板）* ，但不要向 B 板连接任何外部电源。
4. 使用 USB 数据线将*以太网母板（A 板）* 连接至 PC。
5. 将 **电源开关**从 GND 拨至 5V0 一侧。此时，**5V Power On LED** 应点亮。

正式开始开发 现在，请前往*快速入门* 中的*详细安装步骤* 章节，查看如何设置开发环境，并尝试将示例项目烧录至您的开发板。

请务必在进入下一步前，确保您已完成上述所有步骤。

配置与加载以太网示例 在完成开发环境设置和开发板测试后，您可以配置并烧录 ethernet/basic 示例。本示例专门用于测试以太网功能，支持不同 PHY，包括*ESP32-Ethernet-Kit V1.1* 开发板使用的 **IP101GRI** 。

针对 ESP32-Ethernet-Kit V1.0 的主要修改：

- 原 GPIO0 反相后时钟提供给 PHY 方案改为由 PHY 侧外接无源晶振，提供时钟给 GPIO0。原用于控制有源晶振的 OSC_EN 的 IO2 释放，可用作其他用途。
- 为防止 ESP32 侧 GPIO0 的上电状态受到 PHY 侧时钟输出的影响，PHY 侧 RESET_N 默认为低，关闭 PHY 侧时钟输出。而后可通过 GPIO5 控制 RESET_N 打开该时钟输出。
- 移除 FT2232H 芯片的外部 SPI Flash U6。
- 移除流控的测试排针 J4。
- 移除 nTRST JTAG 信号，相应的 GPIO4 可用作其他用途。
- GPIO15 线上的上拉电阻 R68 移至 JTAG 的 MTDO 侧。
- 为了加强 A 板和 B 板连接间的防呆设计（减少反向插入 B 板的机会），将原先 A 板上的 2 排 4 针排针改为 1 排 4 针排母和 1 排 4 针排针。相应的 4 针排针排和排母排则安装在 B 板上。

ESP32-Ethernet-Kit 的其他版本

- *ESP32-Ethernet-Kit V1.0 入门指南*

相关文档

- ESP32-Ethernet-Kit V1.1 以太网母板（A 板）原理图 (PDF)
- ESP32-Ethernet-Kit V1.0 PoE 子板（B 板）原理图 (PDF)
- ESP32 技术规格书 (PDF)
- ESP32-WROVER-B 技术规格书 (PDF)
- *JTAG 调试*
- *ESP32 H/W 硬件参考*

有关本开发板的更多设计文档，请联系我们的商务部门 sales@espressif.com。

1.3.5 ESP32-DevKitS(-R)

本指南介绍了乐鑫专为 ESP32 设计的烧录底板 ESP32-DevKitS(-R)。

ESP32-DevKitS(-R) 包括两款开发板，分别是 ESP32-DevKitS 和 ESP32-DevKitS-R。S 代表弹簧 (spring)，R 代表 WROVER 模组。

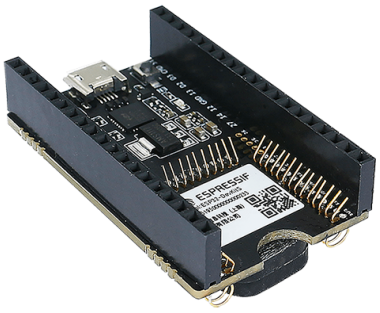	
ESP32-DevKitS	ESP32-DevKitS-R

本指南包括如下内容：

- 入门指南: 简要介绍了 ESP32-DevKitS(-R) 和硬件、软件设置指南。
- 硬件参考: 详细介绍了 ESP32-DevKitS(-R) 的硬件。
- 相关文档: 列出了相关文档的链接。

入门指南

本节介绍了如何快速上手 ESP32-DevKitS(-R)。开头部分介绍了 ESP32-DevKitS(-R)，如何烧录开发板 小节介绍了怎样在 ESP32-DevKitS(-R) 上安装模组、配置及烧录固件。

概述 ESP32-DevKitS(-R) 是乐鑫专为 ESP32 设计的烧录底板，无需将 ESP32 模组与电源和信号线焊接便可进行烧录。ESP32-DevKitS(-R) 搭载模组后，可作为类似 ESP32-DevKitC 的小型开发板使用。

ESP32-DevKitS 和 ESP32-DevKitS-R 仅在弹簧布局上有所不同，用于适配不同的 ESP32 模组。

- **ESP32-DevKitS:**
  - *ESP32-WROOM-32 模组*
  - *ESP32-WROOM-32D*
  - *ESP32-WROOM-32U*
  - *ESP32-SOLO-1 模组*
  - ESP32-WROOM-32E
  - ESP32-WROOM-32UE
- **ESP32-DevKitS-R:**
  - *ESP32-WROVER (PCB & IPEX)*
  - *ESP32-WROVER-B (PCB & IPEX)*
  - ESP32-WROVER-E
  - ESP32-WROVER-IE

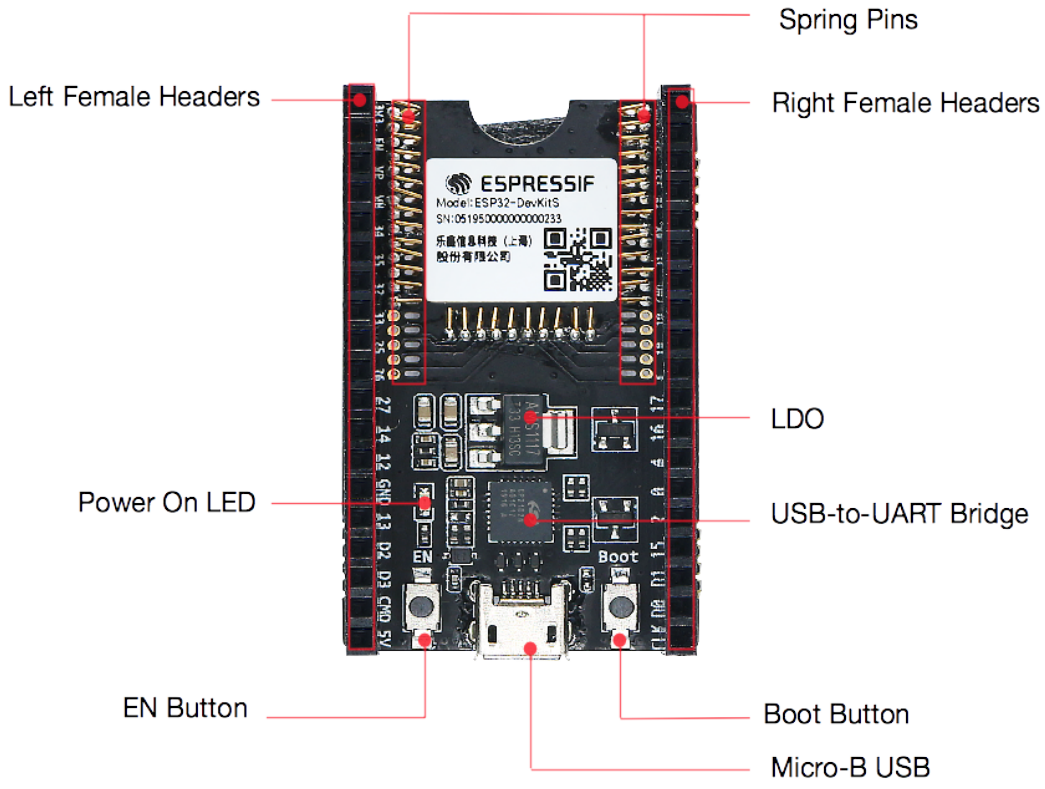

图 33: ESP32-DevKitS - 正面

组件介绍

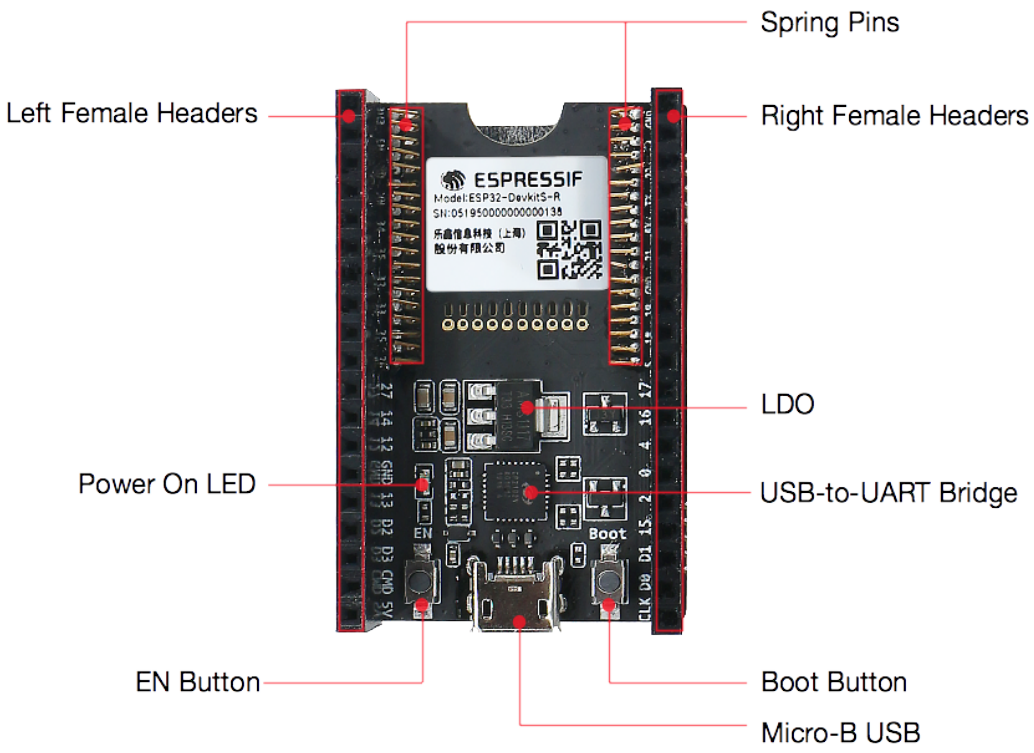

图 34: ESP32-DevKitS-R - 正面

主要组件	介绍
引脚弹簧	适配模组上的邮票孔，用于连接和固定模组。
2.54 mm 排母	连接板上搭载模组的引脚。关于排母的描述，请见针座 小节。
USB-to-UART 桥接器	单芯片 USB 转 UART 桥接器，可提供高达 3 Mbps 的传输速率。
LDO	5V-to-3.3V 低压差线型稳压器 (LDO)。
Micro-USB 连接器/Micro USB 端口	USB 接口。可用作开发板的供电电源或连接电脑和开发板的通信接口。
EN 键	复位按键。
Boot 键	下载按键。按住 **Boot** 键的同时按一下 **EN** 键进入“固件下载”模式，通过串口下载固件。
电源指示 LED	开发板通电后（USB 或供电电源），该指示灯亮起。

如何烧录开发板 通电前，请确保 ESP32-DevKitS(-R) 完好无损。

必备硬件

- 任选一款 ESP32 模组
- USB 2.0 数据线（标准 A 型转 Micro-B 型）
- 电脑（Windows、Linux 或 macOS）

硬件设置 请按照下列步骤将模组安装到 ESP32-DevKitS(-R) 烧录底板上：

- 将模组轻放到 ESP32-DevKitS(-R) 烧录底板上。确保模组上方的邮票孔与底板上的引脚弹簧对齐。
- 将模组向下压，听到“咔哒”一声即说明模组已经压入底板。
- 检查所有引脚弹簧是否均已卡进邮票孔中。如发现错位，可使用镊子将引脚弹簧拨入邮票孔中。

软件设置

首选方式 使用 ESP-IDF 开发框架是将二进制文件 (*.bin) 烧录到 ESP32-DevKitS(-R) 的首选方式。请前往快速入门，在详细安装步骤 一节查看如何快速设置开发环境，将应用程序烧录至 ESP32-DevKitS(-R)。

备选方式 Windows 用户也可以使用 Flash 下载工具 烧录二进制文件。请下载该工具、解压并参照 *doc* 文件夹内的使用指南。

注解:

1. 烧录二进制文件时需将 ESP32 芯片设置成固件下载模式。这一步骤可由烧录工具自动执行，也可按住 Boot 按键并点按 EN 按键手动执行。
2. 烧录完成后，烧录工具默认情况下会重启模组，运行已烧录的程序。

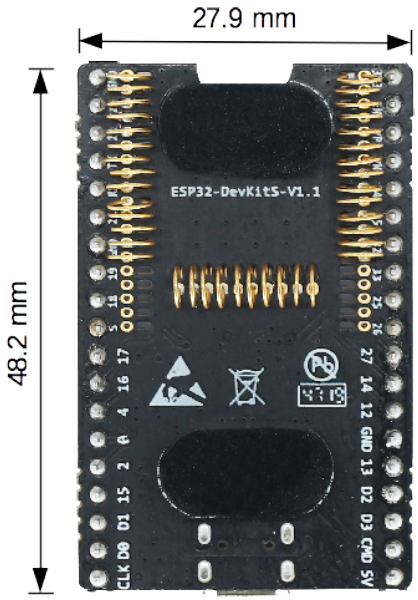

图 35: ESP32-DevKitS 尺寸 - 背面

底板尺寸

内含组件和包装

零售订单 如购买样品，每个 ESP32-DevKitS(-R) 底板将以防静电袋或零售商选择的其他方式包装。

零售订单请前往 https://www.espressif.com/zh-hans/company/contact/buy-a-sample。

批量订单 如批量购买，ESP32-DevKitS(-R) 烧录底板将以大纸板箱包装。

批量订单请前往 https://www.espressif.com/zh-hans/contact-us/sales-questions。

硬件参考

功能框图 ESP32-DevKitS(-R) 的主要组件和连接方式如下图所示。

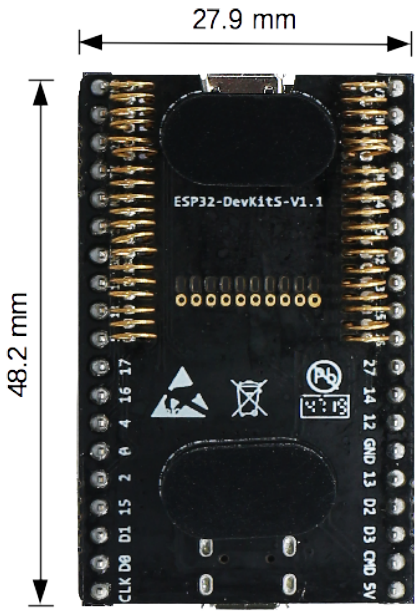

图 36: ESP32-DevKitS-R 尺寸 - 背面

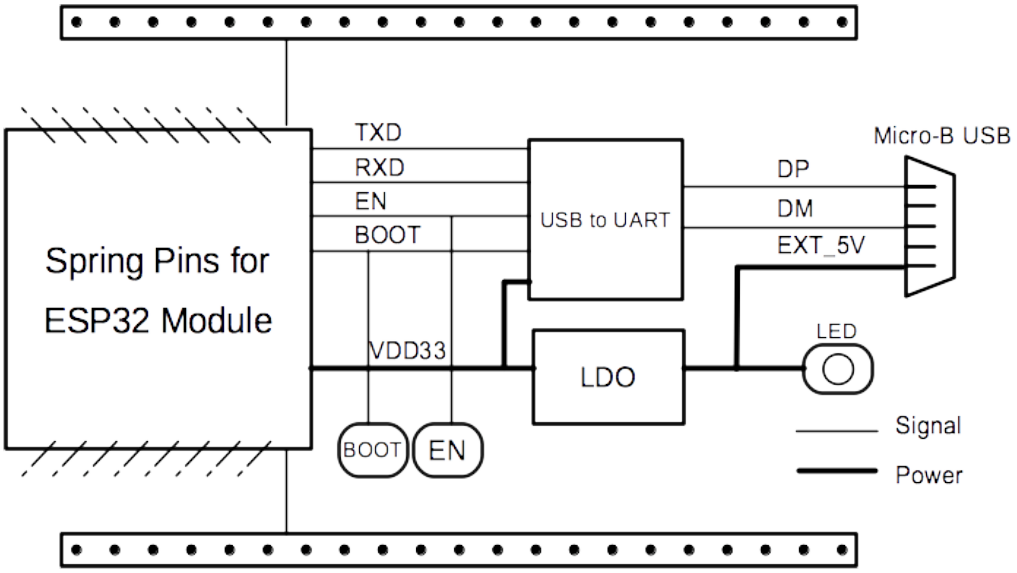

图 37: ESP32-DevKitS(-R)（点击放大）

电源选项 您可从以下三种供电方式中任选其一给 ESP32-DevKitS(-R) 供电：

- Micro USB 端口供电（默认）
- 5V 和 GND 管脚供电
- 3V3 和 GND 管脚供电

建议选择第一种供电方式：Micro USB 端口供电。

.	标签	信号
L1	3V3	VDD 3V3
L2	EN	CHIP_PU
L3	VP	SENSOR_VP
L4	VN	SENSOR_VN
L5	34	GPIO34
L6	35	GPIO35
L7	32	GPIO32
L8	33	GPIO33
L9	25	GPIO25
L10	26	GPIO26
L11	27	GPIO27
L12	14	GPIO14
L13	12	GPIO12
L14	GND	GND
L15	13	GPIO13
L16	D2	SD_DATA2
L17	D3	SD_DATA3
L18	CMD	SD_CMD
L19	5V	External 5V
R1	GND	GND
R2	23	GPIO23
R3	22	GPIO22
R4	TX	U0TXD
R5	RX	U0RXD
R6	21	GPIO21
R7	GND	GND
R8	19	GPIO19
R9	18	GPIO18
R10	5	GPIO5
R11	17	GPIO17
R12	16	GPIO16
R13	4	GPIO4
R14	0	GPIO0
R15	2	GPIO2
R16	15	GPIO15
R17	D1	SD_DATA1
R18	D0	SD_DATA0
R19	CLK	SD_CLK

针座 针座图片请参照组件介绍。

相关文档

- ESP32-DevKitS(-R) 原理图 (PDF)
- ESP32 技术规格书 (PDF)
- ESP32-WROOM-32 技术规格书 (PDF)

- ESP32-WROOM-32D & ESP32-WROOM-32U 技术规格书 (PDF)
- ESP32-SOLO-1 技术规格书 (PDF)
- ESP32-WROVER 技术规格书 (PDF)
- ESP32-WROVER-B 技术规格书 (PDF)
- 乐鑫产品选型工具

1.3.6 ESP32-PICO-KIT-1

概述

ESP32-PICO-KIT-1 是一款基于 ESP32 的乐鑫开发板，板上搭载 ESP32-PICO-V3 （SiP，系统级封装）模组。ESP32-PICO-V3 具备完整的 Wi-Fi 和蓝牙功能，与其它 ESP32 系列模组相比，此模组已集成下述外围组件，无需额外安装：

- 40 MHz 晶振
- 4 MB flash
- 滤波电容
- 射频匹配网络等

将上述组件封装至 ESP32-PICO-V3，用户无需额外购买，大大降低了安装和测试的成本，同时也增加了产品的可用性。

ESP32-PICO-KIT-1 开发板还集成了 USB-to-UART 桥接电路，方便开发人员直接通过 PC 的 USB 端口直接进行固件烧录和调试。

为方便硬件连接，ESP32-PICO-V3 上的所有 IO 信号和系统电源管脚均引出至开发板两侧焊盘 (18 x 0.1”)。上述 18 个焊盘也均引出至排针，可使用杜邦线连接。

注解： ESP32-PICO-KIT-1 开发板默认采用排针。

ESP32-PICO-KIT-1 为用户提供了基于 ESP32 芯片应用开发的硬件，更加方便用户探索 ESP32 芯片的功能。

本指南包括以下几个章节：

- 快速入门：简要介绍 ESP32-PICO-KIT-1 开发板，以及上手这款开发板所需的软件配置；
- 内含组件和包装方式：介绍零售订单和批量订单所提供的组件及包装方式；
- 硬件参考：提供 ESP32-PICO-KIT-1 开发板硬件详细信息；
- 硬件版本：介绍硬件历史版本（如有），已知问题（如有），并提供链接至历史版本开发板的入门指南（如有）；
- 相关文档：提供相关文档的链接。

快速入门

本节介绍了如何快速上手 ESP32-PICO-KIT-1。首先对 ESP32-PICO-KIT-1 开发板进行了简要介绍，然后在应用开发 小节介绍如何将固件烧录至开发板。

组件描述 ESP32-PICO-KIT-1 开发板的主要组件、接口及控制方式见下图。

从左上角开始，按顺时针顺序，开发板主要组件的描述见下表。

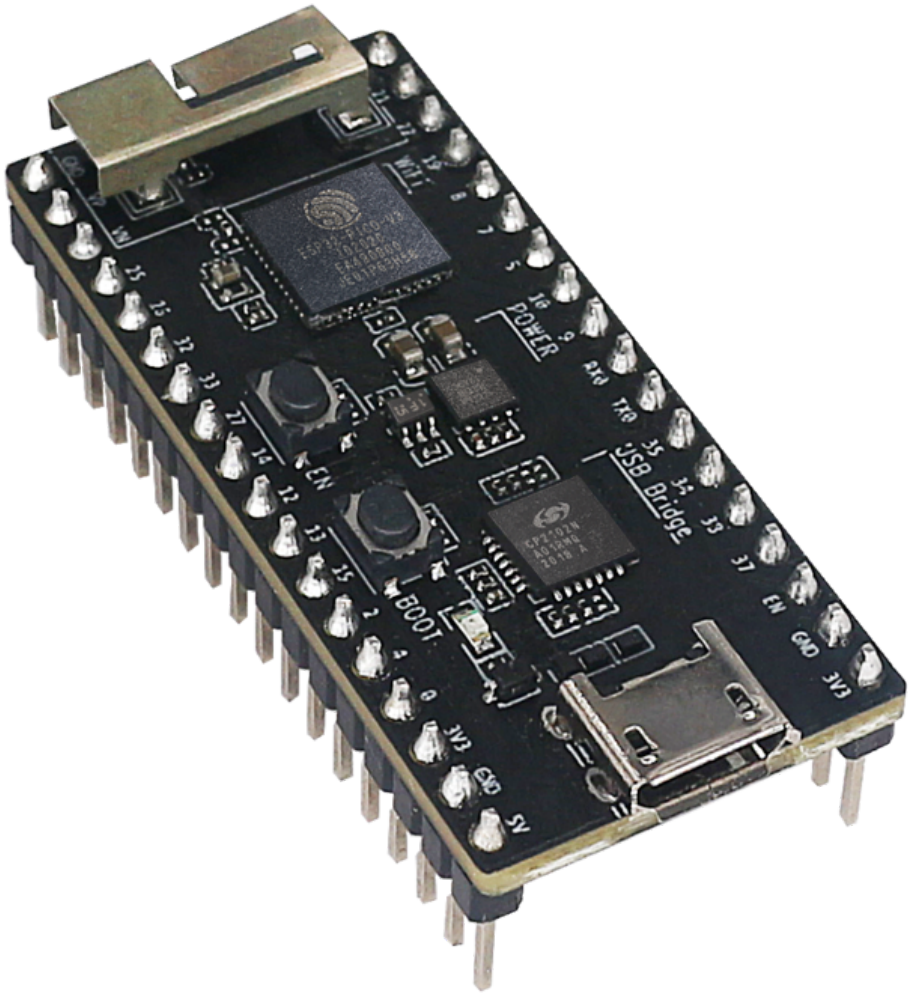

图 38: ESP32-PICO-KIT-1 外观图（点击放大）

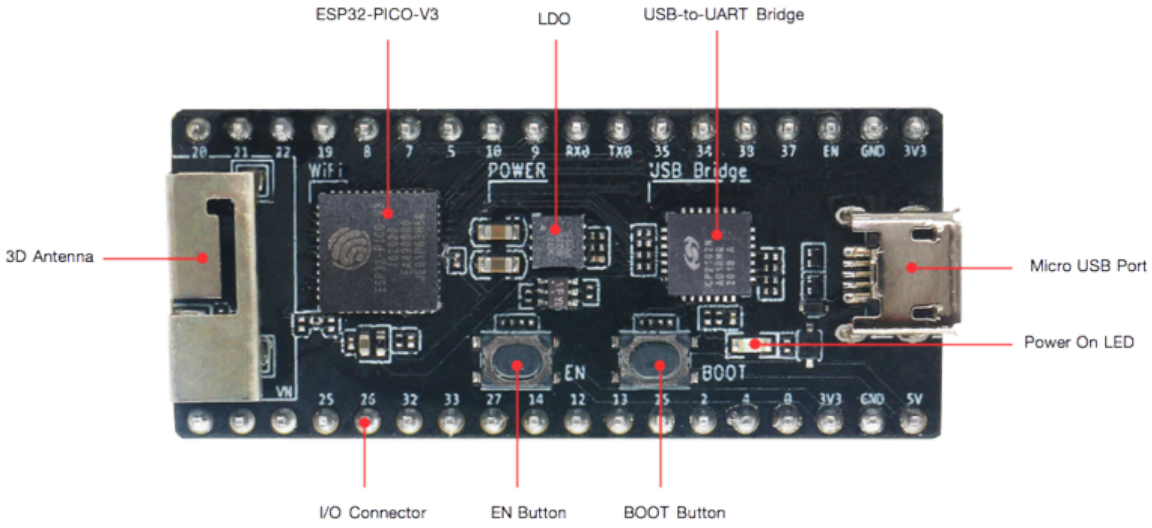

图 39: ESP32-PICO-KIT-1 开发板布局 - 正面（点击放大）

主要组件	描述
ESP32-PICO-V3	ESP32-PICO-KIT-1 开发板的板载模组 (SiP)，搭载 ESP32 SoC 芯片，仅需连接天线、LC 匹配电路、去耦电容和一个 EN 信号上拉电阻即可正常工作。
LDO	5V 转 3.3V 低压差稳压器
USB-to-UART	CP2102N：单芯片 USB-to-UART 桥接器，数据传输速率可达 3 Mbps。
Micro-B USB	USB 接口。可为开发板供电，或连接 PC 进行 USB 通信。
5V Power On LED	开发板上电后，红色指示灯亮起。更多信息，见相关文档 中提供的原理图。
I/O Connector	ESP32-PICO-V3 上的管脚均已引出至开发板排针。用户可对 ESP32 进行编程，实现 PWM、ADC、DAC、I2C、I2S、SPI 等功能。更多信息，见章节管脚描述。
BOOT 按键	下载按键。按下 **Boot** 键并保持，同时按下 **EN** 键将进入固件下载模式，通过串口下载固件。
EN 按键	复位按键。

应用开发 上电前，请确保 ESP32-PICO-KIT-1 完好无损。

所需硬件

- 1 x ESP32-PICO-KIT-1 开发板
- 1 x USB 2.0 A 转 Micro B 数据线
- 1 x PC，运行 Windows、Linux 或 macOS 系统

软件配置 请前往快速入门，在详细安装步骤 一节查看如何快速配置开发环境，将应用程序烧录至 ESP32-PICO-KIT-1 开发板。

内含组件和包装方式

零售订单 如购买样品，每个 ESP32-PICO-KIT-1 将单独包装。

零售订单，请前往 https://www.espressif.com/en/company/contact/buy-a-sample。

批量订单 如批量购买，ESP32-PICO-KIT-1 开发板将以大纸板箱包装。

批量订单请前往 https://www.espressif.com/zh-hans/contact-us/sales-questions。

硬件参考

功能框图 ESP32-PICO-KIT-1 的主要组件和连接方式如下图所示。

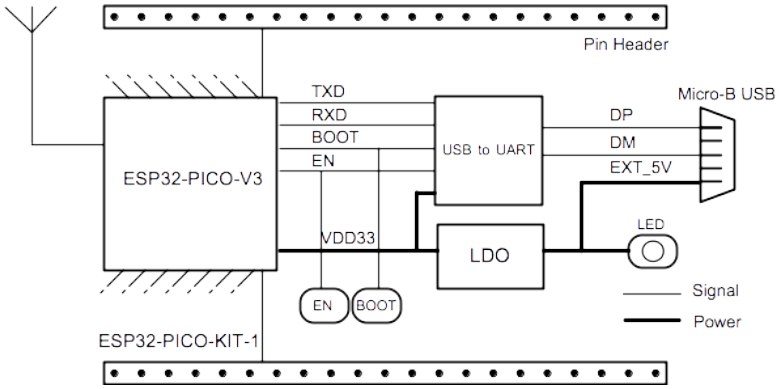

图 40: ESP32-PICO-KIT-1 功能框图（点击放大）

供电选项 开发板提供以下三种供电方式，可任意选择一种：

- Micro USB 供电（默认）
- 5V/GND 管脚供电
- 3V3/GND 管脚供电

警告： 上述供电方式只能选择一种方式，不能同时选择，否则可能会损坏开发板和/或电源。

管脚描述 组件描述 中所示的开发板两侧 I/O 管脚，其具体名称和功能见下表。管脚名称和编号与相关文档 中原理图保持一致。

Header J2

编号	名称	类型	功能
1	IO20	I/O	GPIO20
2	IO21	I/O	GPIO21, VSPIHD, EMAC_TX_EN
3	IO22	I/O	GPIO22, VSPIWP, U0RTS, EMAC_TXD1
4	IO19	I/O	GPIO19, VSPIQ, U0CTS, EMAC_TXD0
5	IO8	I/O	GPIO8, SD_DATA1, HS1_DATA1, U2CTS
6	IO7	I/O	GPIO7, SD_DATA0, HS1_DATA0, U2RTS
7	IO5	I/O	GPIO5, VSPICS0, HS1_DATA6, EMAC_RX_CLK
8	IO10	I/O	GPIO10, SD_DATA3, SPIWP, HS1_DATA3, U1TXD
9	IO9	I/O	GPIO9, SD_DATA2, SPIHD, HS1_DATA2, U1RXD
10	RXD0	I/O	GPIO3, U0RXD （见注解 *1*）, CLK_OUT2
11	TXD0	I/O	GPIO1, U0TXD （见注解 *1*）, CLK_OUT3, EMAC_RXD2
12	IO35	I	ADC1_CH7, RTC_GPIO5
13	IO34	I	ADC1_CH6, RTC_GPIO4
14	IO38	I	GPIO38, ADC1_CH2, RTC_GPIO2
15	IO37	I	GPIO37, ADC1_CH1, RTC_GPIO1
16	EN	I	CHIP_PU
17	GND	P	接地
18	VDD33 (3V3)	P	3.3V 供电

Header J3

编号	名称	类型	功能
1	GND	P	接地
2	SENSOR_VP (FSVP)	I	GPIO36, ADC1_CH0, RTC_GPIO0
3	SENSOR_VN (FSVN)	I	GPIO39, ADC1_CH3, RTC_GPIO3
4	IO25	I/O	GPIO25, DAC_1, ADC2_CH8, RTC_GPIO6, EMAC_RXD0
5	IO26	I/O	GPIO26, DAC_2, ADC2_CH9, RTC_GPIO7, EMAC_RXD1
6	IO32	I/O	32K_XP （见注解 *2a*）, ADC1_CH4, TOUCH9, RTC_GPIO9
7	IO33	I/O	32K_XN （见注解 *2b*）, ADC1_CH5, TOUCH8, RTC_GPIO8
8	IO27	I/O	GPIO27, ADC2_CH7, TOUCH7, RTC_GPIO17, EMAC_RX_DV
9	IO14	I/O	ADC2_CH6, TOUCH6, RTC_GPIO16, MTMS, HSPICLK, HS2_CLK, SD_CLK, EMAC_TXD2
10	IO12	I/O	ADC2_CH5, TOUCH5, RTC_GPIO15, MTDI （见注解 *3*）, HSPIQ, HS2_DATA2, SD_DATA2, EMAC_TXD3
11	IO13	I/O	ADC2_CH4, TOUCH4, RTC_GPIO14, MTCK, HSPID, HS2_DATA3, SD_DATA3, EMAC_RX_ER
12	IO15	I/O	ADC2_CH3, TOUCH3, RTC_GPIO13, MTDO, HSPICS0, HS2_CMD, SD_CMD, EMAC_RXD3
13	IO2	I/O	ADC2_CH2, TOUCH2, RTC_GPIO12, HSPIWP, HS2_DATA0, SD_DATA0
14	IO4	I/O	ADC2_CH0, TOUCH0, RTC_GPIO10, HSPIHD, HS2_DATA1, SD_DATA1, EMAC_TX_ER
15	IO0	I/O	ADC2_CH1, TOUCH1, RTC_GPIO11, CLK_OUT1, EMAC_TX_CLK
16	VDD33 (3V3)	P	3.3V 供电
17	GND	P	接地
18	EXT_5V (5V)	P	5V 供电

注解:

1. 该管脚已连接至板上 USB 桥接器芯片；
2. **32.768 kHz 晶振输入输出管脚：**
   - (a) 输入管脚；
   - (b) 输出管脚；
3. ESP32-PICO-KIT-1 内置 SPI flash 的工作电压为 3.3 V。因此，Strapping 管脚 MTDI 在上电复位过程中应拉低。如果连接了该管脚，请确保该管脚在复位中不要拉高。

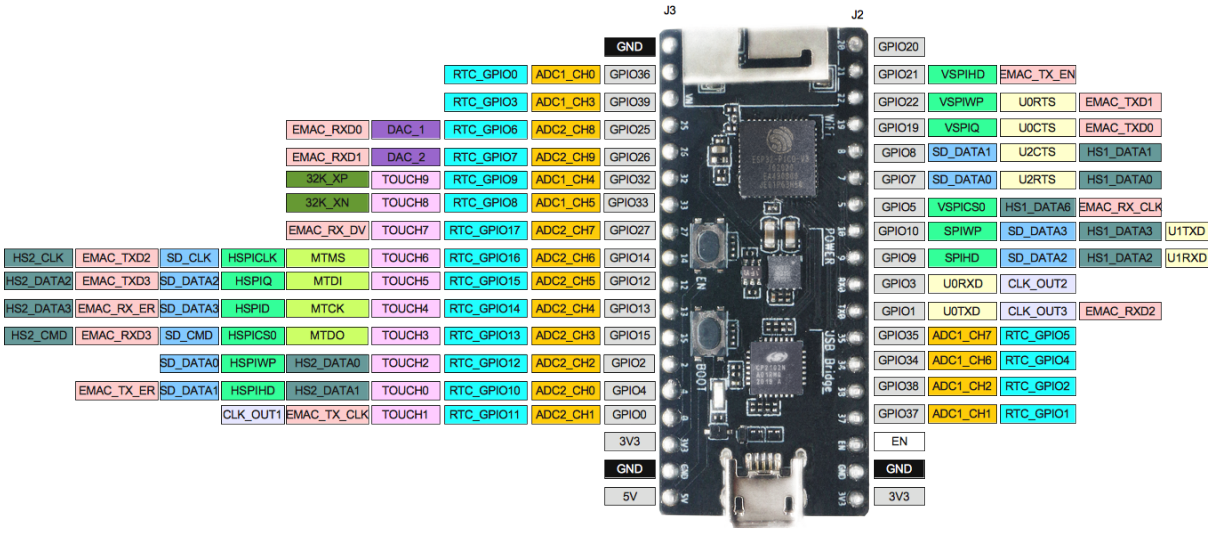

图 41: ESP32-PICO-KIT-1 管脚布局（点击放大）

管脚布局

硬件版本

该开发板为最新硬件，尚未有历史版本。

相关文档

- ESP32-PICO-V3 技术规格书 (PDF)
- 乐鑫产品选型工具
- ESP32-PICO-KIT-1 原理图 (PDF)
- ESP32-PICO-KIT-1 PCB 布局图 (PDF)

有关本开发板的更多设计文档，请联系我们的商务部门 sales@espressif.com。

1.3.7 ESP32-PICO-DevKitM-2

概述

ESP32-PICO-DevKitM-2 是一款基于 ESP32 的乐鑫开发板，板上搭载 ESP32-PICO-MINI-02(02U) 模组。ESP32-PICO-MINI-02(02U) 模组具备完整的 Wi-Fi 和蓝牙功能。

ESP32-PICO-DevKitM-2 开发板同时集成了 USB-to-UART 桥接电路，方便开发人员直接通过 PC 的 USB 端口直接进行固件烧录和调试。

为方便硬件连接，ESP32-PICO-MINI-02(02U) 上的所有 IO 信号和系统电源管脚均引出至开发板两侧焊盘 (18 x 0.1”)。上述 18 个焊盘也均引出至排针，可使用杜邦线连接。

注解： ESP32-PICO-DevKitM-2 开发板默认采用排针。

ESP32-PICO-DevKitM-2 为用户提供了基于 ESP32 芯片应用开发的硬件，更加方便用户探索 ESP32 芯片的功能。

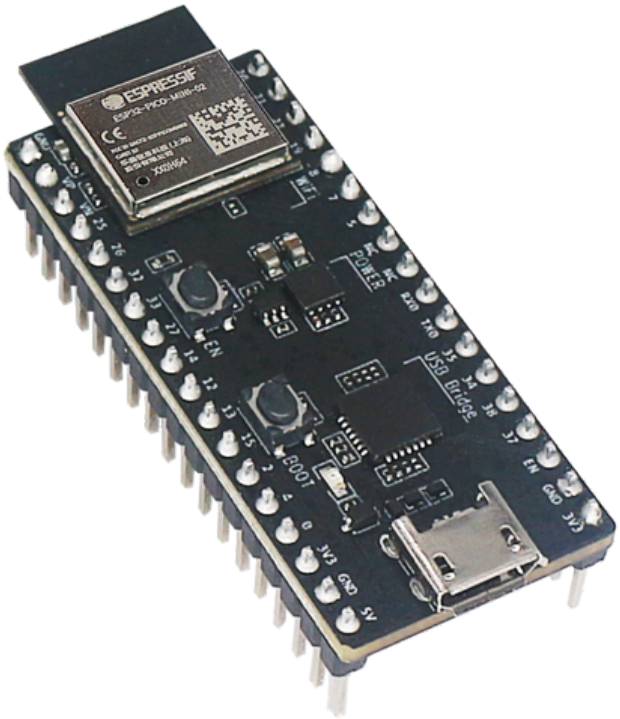

图 42: ESP32-PICO-DevKitM-2 外观图（点击放大）

本指南包括以下几个章节：

- 快速入门：简要介绍 ESP32-PICO-DevKitM-2 开发板，以及上手这款开发板所需的软件配置；
- 内含组件和包装方式：介绍零售订单和批量订单所提供的组件及包装方式；
- 硬件参考：提供 ESP32-PICO-DevKitM-2 开发板硬件详细信息；
- 硬件版本：介绍硬件历史版本（如有），已知问题（如有），并提供链接至历史版本开发板的入门指南（如有）；
- 相关文档：提供相关文档的链接。

快速入门

本节介绍了如何快速上手 ESP32-PICO-DevKitM-2。首先对 ESP32-PICO-DevKitM-2 开发板进行了简要介绍，然后在应用开发 小节介绍如何将固件烧录至开发板。

组件描述 ESP32-PICO-DevKitM-2 开发板的主要组件、接口及控制方式见下图。下文以板载 ESP32-PICO-MINI-02 的开发板为例进行说明。

从左上角开始，按顺时针顺序，开发板主要组件的描述见下表。

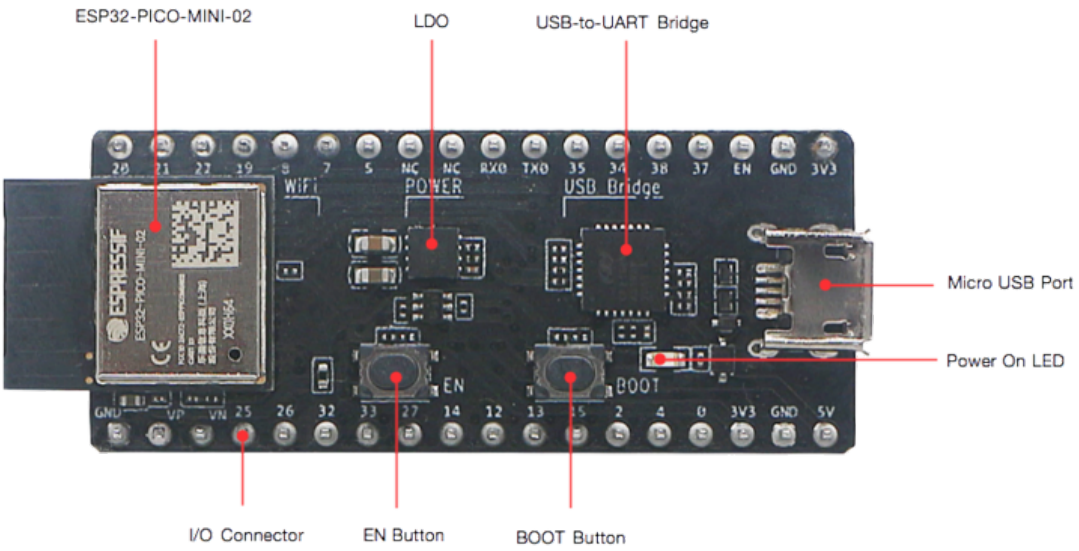

图 43: ESP32-PICO-DevKitM-2 开发板组件布局 - 正面（点击放大）

主要组件	描述
ESP32-PICO-MINI-02	ESP32-PICO-DevKitM-2 开发板的板载模组，搭载 ESP32 SoC 芯片。用户也可选择板载 ESP32-PICO-MINI-02U 的开发板。
LDO	5V 转 3.3V 低压差稳压器
USB-to-UART	CP2102N：单芯片 USB-to-UART 桥接器，数据传输速率可达 3 Mbps。
Micro-B USB 接口	USB 接口。可为开发板供电，或连接 PC 进行 USB 通信。
5V Power On LED	开发板上电后，红色指示灯亮起。更多信息，见相关文档 中提供的原理图。
I/O Connector	ESP32-PICO-MINI-02 上的管脚均已引出至开发板排针。用户可对 ESP32 进行编程，实现 PWM、ADC、DAC、I2C、I2S、SPI 等功能。更多信息，见章节管脚描述。
BOOT 按键	下载按键。按下 **Boot** 键并保持，同时按下 **EN** 键将进入固件下载模式，通过串口下载固件。
EN 按键	复位按键。

应用开发 上电前，请确保 ESP32-PICO-DevKitM-2 完好无损。

所需硬件

- 1 x ESP32-PICO-DevKitM-2 开发板
- 1 x USB 2.0 A 转 Micro B 数据线
- 1 x PC，运行 Windows、Linux 或 macOS 系统

软件配置 请前往快速入门，在详细安装步骤 一节查看如何快速配置开发环境，将应用程序烧录至 ESP32-PICO-DevKitM-2 开发板。

内含组件和包装方式

零售订单 如购买样品，每个 ESP32-PICO-DevKitM-2 将单独包装。

零售订单，请前往 https://www.espressif.com/en/company/contact/buy-a-sample。

批量订单 如批量购买，ESP32-PICO-DevKitM-2 开发板将以大纸板箱包装。

批量订单请前往 https://www.espressif.com/zh-hans/contact-us/sales-questions。

硬件参考

功能框图 ESP32-PICO-DevKitM-2 的主要组件和连接方式如下图所示。

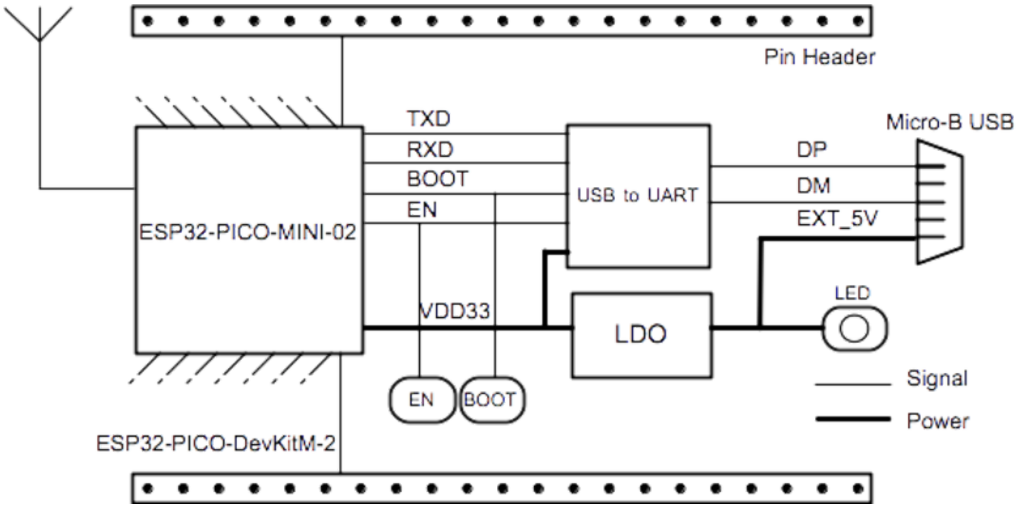

图 44: ESP32-PICO-DevKitM-2 功能框图（点击放大）

供电方式 开发板提供以下三种供电方式，可任意选择一种：

- Micro USB 供电（默认）
- 5V/GND 管脚供电
- 3V3/GND 管脚供电

警告： 上述供电方式只能选择一种方式，不能同时选择，否则可能会损坏开发板和/或电源。

管脚描述 组件描述 中所示的开发板两侧 I/O 管脚，其具体名称和功能见下表。管脚名称和编号与相关文档 中原理图保持一致。

Header J2

编号	名称	类型	功能
1	IO20	I/O	GPIO20
2	IO21	I/O	GPIO21, VSPIHD, EMAC_TX_EN
3	IO22	I/O	GPIO22, VSPIWP, U0RTS, EMAC_TXD1
4	IO19	I/O	GPIO19, VSPIQ, U0CTS, EMAC_TXD0
5	IO8	I/O	GPIO8, SD_DATA1, HS1_DATA1, U2CTS
6	IO7	I/O	GPIO7, SD_DATA0, HS1_DATA0, U2RTS
7	IO5	I/O	GPIO5, VSPICS0, HS1_DATA6, EMAC_RX_CLK
8	NC	-	NC
9	NC	-	NC
10	RXD0	I/O	GPIO3, U0RXD （见注解 *1*）, CLK_OUT2
11	TXD0	I/O	GPIO1, U0TXD （见注解 *1*）, CLK_OUT3, EMAC_RXD2
12	IO35	I	ADC1_CH7, RTC_GPIO5
13	IO34	I	ADC1_CH6, RTC_GPIO4
14	IO38	I	GPIO38, ADC1_CH2, RTC_GPIO2
15	IO37	I	GPIO37, ADC1_CH1, RTC_GPIO1
16	EN	I	CHIP_PU
17	GND	P	接地
18	VDD33 (3V3)	P	3.3 V 供电

Header J3

编号	名称	类型	功能
1	GND	P	接地
2	SENSOR_VP (FSVP)	I	GPIO36, ADC1_CH0, RTC_GPIO0
3	SENSOR_VN (FSVN)	I	GPIO39, ADC1_CH3, RTC_GPIO3
4	IO25	I/O	GPIO25, DAC_1, ADC2_CH8, RTC_GPIO6, EMAC_RXD0
5	IO26	I/O	GPIO26, DAC_2, ADC2_CH9, RTC_GPIO7, EMAC_RXD1
6	IO32	I/O	32K_XP （见注解 *2a*）, ADC1_CH4, TOUCH9, RTC_GPIO9
7	IO33	I/O	32K_XN （见注解 *2b*）, ADC1_CH5, TOUCH8, RTC_GPIO8
8	IO27	I/O	GPIO27, ADC2_CH7, TOUCH7, RTC_GPIO17, EMAC_RX_DV
9	IO14	I/O	ADC2_CH6, TOUCH6, RTC_GPIO16, MTMS, HSPICLK, HS2_CLK, SD_CLK, EMAC_TXD2
10	IO12	I/O	ADC2_CH5, TOUCH5, RTC_GPIO15, MTDI （见注解 *3*）, HSPIQ, HS2_DATA2, SD_DATA2, EMAC_TXD3
11	IO13	I/O	ADC2_CH4, TOUCH4, RTC_GPIO14, MTCK, HSPID, HS2_DATA3, SD_DATA3, EMAC_RX_ER
12	IO15	I/O	ADC2_CH3, TOUCH3, RTC_GPIO13, MTDO, HSPICS0, HS2_CMD, SD_CMD, EMAC_RXD3
13	IO2	I/O	ADC2_CH2, TOUCH2, RTC_GPIO12, HSPIWP, HS2_DATA0, SD_DATA0
14	IO4	I/O	ADC2_CH0, TOUCH0, RTC_GPIO10, HSPIHD, HS2_DATA1, SD_DATA1, EMAC_TX_ER
15	IO0	I/O	ADC2_CH1, TOUCH1, RTC_GPIO11, CLK_OUT1, EMAC_TX_CLK
16	VDD33 (3V3)	P	3.3V 供电
17	GND	P	接地
18	EXT_5V (5V)	P	5V 供电

注解:

1. 该管脚已连接至板上 USB 桥接器芯片；
2. **32.768 kHz 晶振输入输出管脚：**
   (a) 输入管脚；
   (b) 输出管脚；
3. ESP32-PICO-DevKitM-2 内置 SPI flash 的工作电压为 3.3 V。因此，Strapping 管脚 MTDI 在上电复位过程中应拉低。如果连接了该管脚，请确保该管脚在复位中不要拉高。

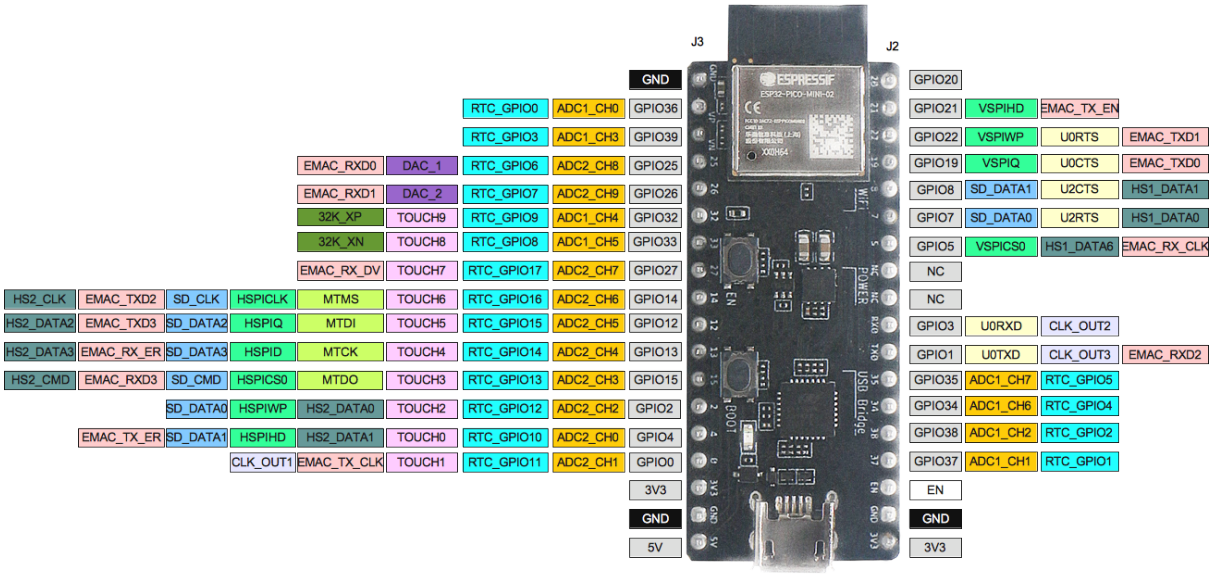

图 45: ESP32-PICO-DevKitM-2 管脚布局（点击放大）

管脚布局

硬件版本

该开发板为最新硬件，尚未有历史版本。

相关文档

- ESP32-PICO-MINI-02 & ESP32-PICO-MINI-02U 技术规格书 (PDF)
- 乐鑫产品选型工具
- ESP32-PICO-DevKitM-2 原理图 (PDF)
- ESP32-PICO-DevKitM-2 PCB 布局图 (PDF)

有关本开发板的更多设计文档，请联系我们的商务部门 sales@espressif.com。

1.3.8 ESP32-DevKitM-1

本指南将介绍如何使用 ESP32-DevKitM-1，并提供更多关于此开发板的信息。

ESP32-DevKitM-1 是乐鑫推出的一款基于 ESP32-MINI-1(1U) 模组的入门级开发板。板上模组大部分管脚均已引出至两侧排针，用户可根据实际需求，通过跳线轻松连接多种外围设备，同时也可将开发板插在面包板上使用。

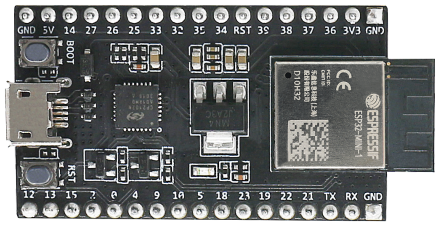	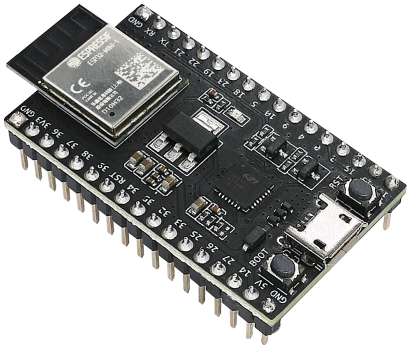
ESP32-DevKitM-1-正面	ESP32-DevKitM-1-侧面

本指南包括：

- 快速入门：提供 ESP32-DevKitM-1 的简要概述及必要的硬件和软件信息。
- 硬件参考：提供 ESP32-DevKitM-1 的详细硬件信息。
- 相关文档：提供相关文档的链接。

快速入门

本节介绍如何开始使用 ESP32-DevKitM-1，主要包括三大部分：首先，介绍一些关于 ESP32-DevKitM-1 的基本信息，然后在应用程序开发 章节介绍如何进行硬件初始化，最后介绍如何为 ESP32-DevKitM-1 烧录固件。

概述 ESP32-DevKitM-1 开发板是一款小巧实用的开发板，具备以下特色功能：

- 集成了 ESP32-MINI-1 或 ESP32-MINI-1U 模组
- USB 转串口编程接口同时可为开发板供电
- 设有排针
- 设有重置按钮和固件下载模式激活按钮
- 以及其他组件

内含组件和包装

零售订单 如购买样品，每个 ESP32-DevKitM-1 开发板将以防静电袋或零售商选择的其他方式包装。

零售订单请前往 https://www.espressif.com/zh-hans/company/contact/buy-a-sample。

批量订单 如批量购买，ESP32-DevKitM-1 开发板将以大纸板箱包装。

批量订单请前往 https://www.espressif.com/zh-hans/contact-us/sales-questions。

组件介绍 ESP32-DevKitM-1 开发板的主要组件、接口及控制方式见下图。下文以板载 ESP32-MINI-1 的开发板为例进行说明。

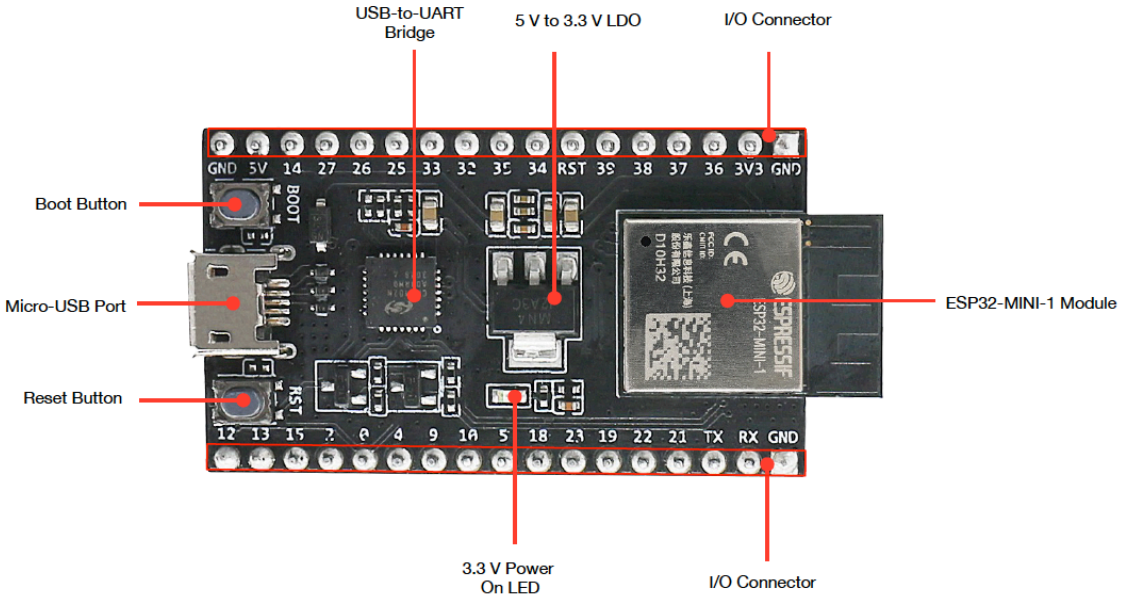

图 46: ESP32-DevKitM-1 - 正面

主要组件	基本介绍
板载模组	ESP32-MINI-1 模组或 ESP32-MINI-1U 模组。ESP32-MINI-1 带有板载 PCB 天线；ESP32-MINI-1U 带有外部天线连接器。两款模组内置的芯片均叠封 4 MB flash。更多详情，请见《ESP32-MINI-1 & ESP32-MINI-1U 技术规格书》
5 V 转 3.3 V LDO	电源转换器，输入 5 V，输出 3.3 V
Boot 键	下载按键。按下 **Boot** 键的同时按一下 **Reset** 键进入“固件下载”模式，通过串口下载固件
Reset 键	复位按键
Micro-USB 接口	USB 接口，可用作开发板的供电电源或 PC 和 ESP32 芯片的通信接口
USB 至 UART 桥接器	单芯片 USB 至 UART 桥接器，可提供高达 3 Mbps 的传输速率
3.3 V 电源指示灯	开发板连接 USB 电源后，该指示灯亮起。更多信息，请见相关文档 中的原理图
I/O 连接器	所有可用 GPIO 管脚（除 Flash 的 SPI 总线）均已引出至开发板的排针。用户可对 ESP32 芯片编程，开发多种功能

应用程序开发 ESP32-DevKitM-1 上电前，请首先确认开发板完好无损。

硬件准备

- ESP32-DevKitM-1 开发板
- USB A / micro USB B 数据线
- PC（Windows、Linux 或 Mac OS）

软件设置 现在，请前往快速入门 中的详细安装步骤 章节，查看如何设置开发环境，并尝试将示例项目烧录至您的开发板。

注意： ESP32-DevKitM-1 搭载的模组为单核 MCU 模组，烧录应用程序前，需要在*menuconfig* 中使能单核模式 (*CONFIG_FREERTOS_UNICORE*)。

硬件参考

功能框图 ESP32-DevKitM-1 的主要组件和连接方式如下图所示。

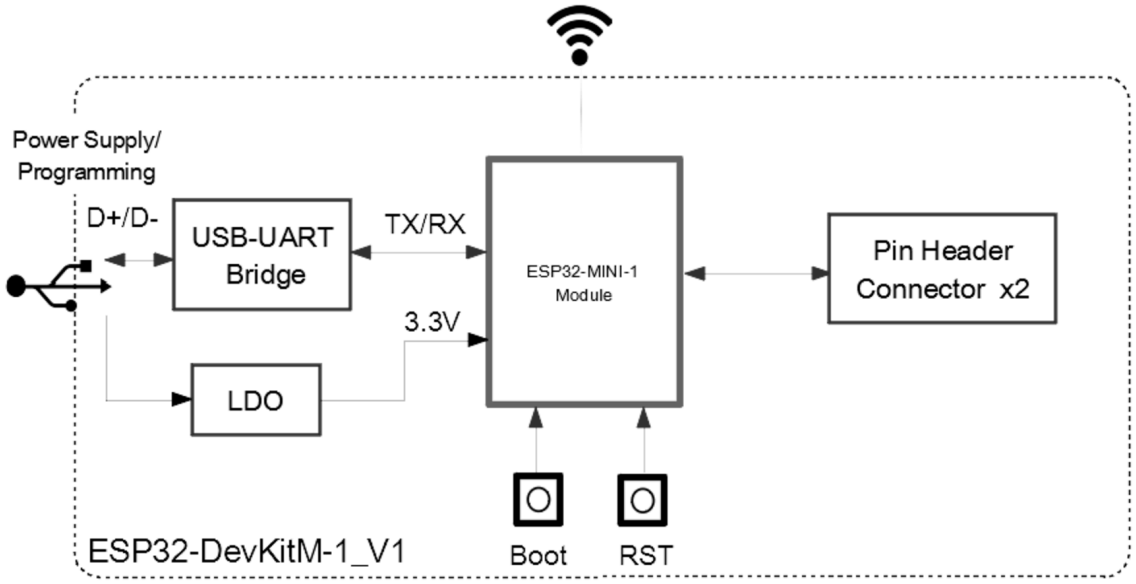

图 47: ESP32-DevKitM-1

电源选项 开发板可从以下三种供电方式中任选其一：

- Micro USB 供电（默认）
- 5V / GND 管脚供电
- 3V3 / GND 管脚供电

警告：

- 上述供电模式 **不可同时连接**，否则可能会损坏开发板和/或电源。
- 建议选择第一种供电方式：Micro USB 端口供电。

管脚描述 开发板两侧 I/O 管脚，其具体名称和功能见下表。外设管脚分配请参考 《ESP32 技术规格书》。

编号	名称	类型	功能
1	GND	P	接地
2	3V3	P	3.3 V 电源
3	I36	I	GPIO36, ADC1_CH0, RTC_GPIO0
4	I37	I	GPIO37, ADC1_CH1, RTC_GPIO1
5	I38	I	GPIO38, ADC1_CH2, RTC_GPIO2
6	I39	I	GPIO39, ADC1_CH3, RTC_GPIO3
7	RST	I	复位；高电平：使能；低电平：关闭
8	I34	I	GPIO34, ADC1_CH6, RTC_GPIO4
9	I35	I	GPIO35, ADC1_CH7, RTC_GPIO5

下页继续

表 6 – 续上页

编号	名称	类型	功能
10	IO32	I/O	GPIO32, XTAL_32K_P (32.768 kHz crystal oscillator input), ADC1_CH4, TOUCH9, RTC_GPIO9
11	IO33	I/O	GPIO33, XTAL_32K_N (32.768 kHz crystal oscillator output), ADC1_CH5, TOUCH8, RTC_GPIO8
12	IO25	I/O	GPIO25, DAC_1, ADC2_CH8, RTC_GPIO6, EMAC_RXD0
13	IO26	I/O	GPIO26, DAC_2, ADC2_CH9, RTC_GPIO7, EMAC_RXD1
14	IO27	I/O	GPIO27, ADC2_CH7, TOUCH7, RTC_GPIO17, EMAC_RX_DV
15	IO14	I/O	GPIO14, ADC2_CH6, TOUCH6, RTC_GPIO16, MTMS, HSPICLK, HS2_CLK, SD_CLK, EMAC_TXD2
16	5V	P	5 V 电源
17	IO12	I/O	GPIO12, ADC2_CH5, TOUCH5, RTC_GPIO15, MTDI, HSPIQ, HS2_DATA2, SD_DATA2, EMAC_TXD3
18	IO13	I/O	GPIO13, ADC2_CH4, TOUCH4, RTC_GPIO14, MTCK, HSPID, HS2_DATA3, SD_DATA3, EMAC_RX_ER
19	IO15	I/O	GPIO15, ADC2_CH3, TOUCH3, RTC_GPIO13, MTDO, HSPICS0, HS2_CMD, SD_CMD, EMAC_RXD3
20	IO2	I/O	GPIO2, ADC2_CH2, TOUCH2, RTC_GPIO12, HSPIWP, HS2_DATA0, SD_DATA0
21	IO0	I/O	GPIO0, ADC2_CH1, TOUCH1, RTC_GPIO11, CLK_OUT1, EMAC_TX_CLK
22	IO4	I/O	GPIO4, ADC2_CH0, TOUCH0, RTC_GPIO10, HSPIHD, HS2_DATA1, SD_DATA1, EMAC_TX_ER
23	IO9	I/O	GPIO9, HS1_DATA2, U1RXD, SD_DATA2
24	IO10	I/O	GPIO10, HS1_DATA3, U1TXD, SD_DATA3
25	IO5	I/O	GPIO5, HS1_DATA6, VSPICS0, EMAC_RX_CLK
26	IO18	I/O	GPIO18, HS1_DATA7, VSPICLK
27	IO23	I/O	GPIO23, HS1_STROBE, VSPID
28	IO19	I/O	GPIO19, VSPIQ, U0CTS, EMAC_TXD0
29	IO22	I/O	GPIO22, VSPIWP, U0RTS, EMAC_TXD1
30	IO21	I/O	GPIO21, VSPIHD, EMAC_TX_EN
31	TXD0	I/O	GPIO1, U0TXD, CLK_OUT3, EMAC_RXD2
32	RXD0	I/O	GPIO3, U0RXD, CLK_OUT2

硬件修订历史

尚无版本升级历史。

相关文档

- 《ESP32-MINI-1 & ESP32-MINI-1U 技术规格书》 (PDF)
- ESP32-DevKitM-1 原理图 (PDF)
- ESP32-DevKitM-1 PCB 布局图 (PDF)
- ESP32-DevKitM-1 布局图 (DXF) - 可使用 Autodesk Viewer 查看
- 乐鑫产品选型工具
- 《ESP32 技术规格书》 (PDF)

有关本开发板的更多设计文档，请联系我们的商务部门 sales@espressif.com。

1.4 详细安装步骤

请根据下方详细步骤，完成安装过程。

1.4.1 设置开发环境

- 第一步：安装准备 （*Windows* 、*Linux* 和*macOS*）
- 第二步：获取 *ESP-IDF*
- 第三步：设置工具
- 第四步：设置环境变量

1.4.2 创建您的第一个工程

- 第五步：开始创建工程
- 第六步：连接设备
- 第七步：配置
- 第八步：编译工程
- 第九步：烧录到设备
- 第十步：监视器

1.5 第一步：安装准备

在正式开始创建工程前，请先完成工具的安装，具体步骤见下：

1.5.1 Windows 平台工具链的标准设置

注解： 目前，基于 CMake 的构建系统仅支持 64 位 Windows 版本。32 位 Windows 版本的用户可根据*传统 GNU Make 构建系统* 中的介绍进行操作。

概述

ESP-IDF 需要安装一些必备工具，才能围绕 ESP32 构建固件，包括 Python、Git、交叉编译器、CMake 和 Ninja 编译工具等。

在本入门指南中，我们通过 **命令提示符**进行有关操作。不过，您在安装 ESP-IDF 后还可以使用*Eclipse* 或其他支持 CMake 的图形化工具 IDE。

注解： 较早 ESP-IDF 版本使用*传统 GNU Make 构建系统* 和 MSYS2 Unix 兼容环境。但如今已非必需，用户可直接通过 Windows 命令提示符使用 ESP-IDF。

注解： 限定条件：Python 或 ESP-IDF 的安装路径中一定不能包含空格或括号。与此同时，除非操作系统配置为支持 Unicode UTF-8，否则 Python 或 ESP-IDF 的安装路径中也不能包括特殊字符（非 ASCII 码字符）

系统管理员可以通过如下方式将操作系统配置为支持 Unicode UTF-8：控制面板-更改日期、时间或数字格式-管理选项卡-更改系统地域-勾选选项 “Beta：使用 Unicode UTF-8 支持全球语言” -点击确定-重启电脑。

ESP-IDF 工具安装器

安装 ESP-IDF 必备工具最简易的方式是从 https://dl.espressif.com/dl/esp-idf/?idf=4.3 中下载 ESP-IDF 工具安装器。

在线安装与离线安装的区别 在线安装程序非常小，可以安装 ESP-IDF 的所有版本。在安装过程中，安装程序只下载必要的依赖文件，包括 Git For Windows 安装器。在线安装程序会将下载的文件存储在缓存目录 `%userprofile%/espressif` 中。

离线安装程序不需要任何网络连接。安装程序中包含了所有需要的依赖文件，包括 Git For Windows 安装器。

安装内容 安装程序会安装以下组件：

- 内置的 Python
- 交叉编译器
- OpenOCD
- CMake 和 Ninja 编译工具
- ESP-IDF

安装程序允许将程序下载到现有的 ESP-IDF 目录。推荐将 ESP-IDF 下载到 `%userprofile%\Desktop\esp-idf` 目录下，其中 `%userprofile%` 代表家目录。

启动 ESP-IDF 环境 安装结束时，如果勾选了 `Run ESP-IDF PowerShell Environment` 或 `Run ESP-IDF Command Prompt (cmd.exe)`，安装程序会在选定的提示符窗口启动 ESP-IDF。

`Run ESP-IDF PowerShell Environment:`

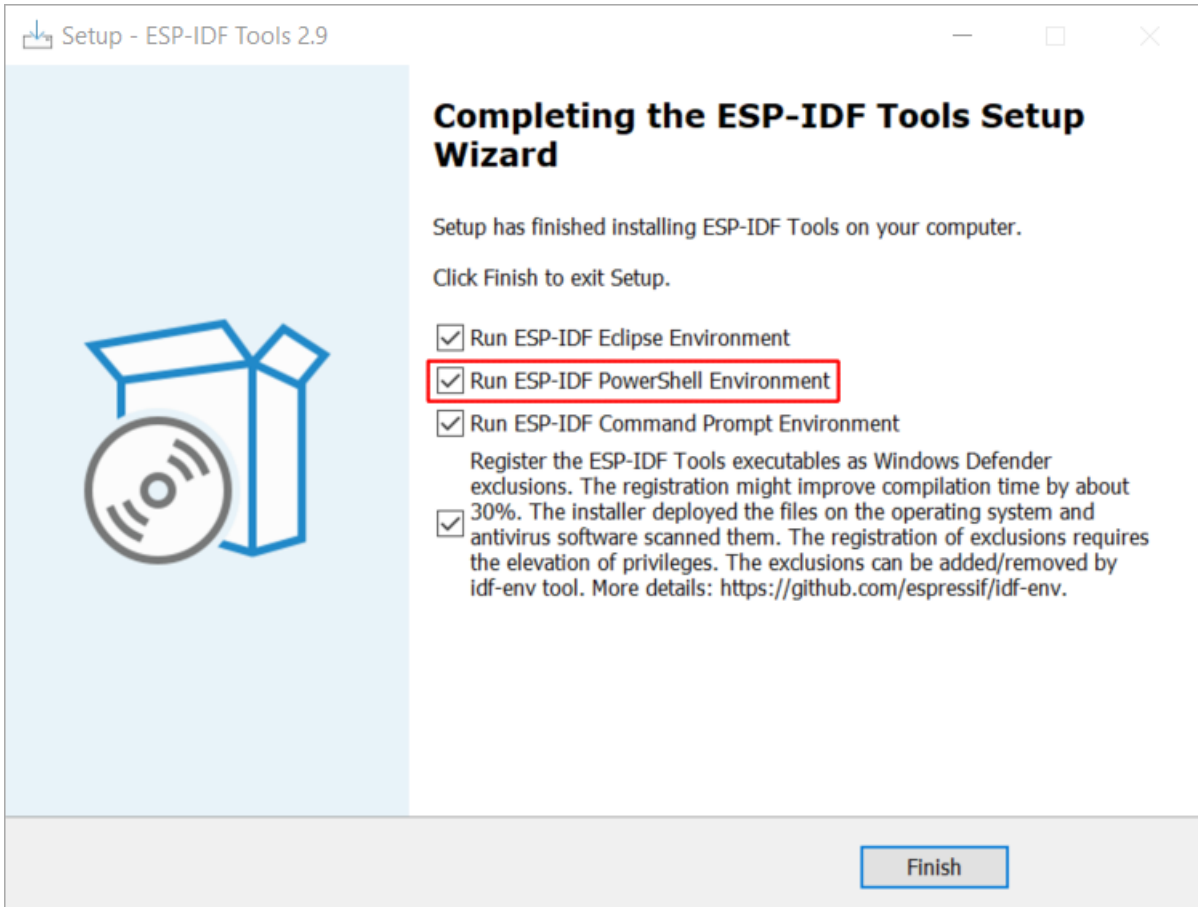

图 48: 完成 ESP-IDF 工具安装向导时运行 Run ESP-IDF PowerShell Environment

`Run ESP-IDF Command Prompt (cmd.exe):`

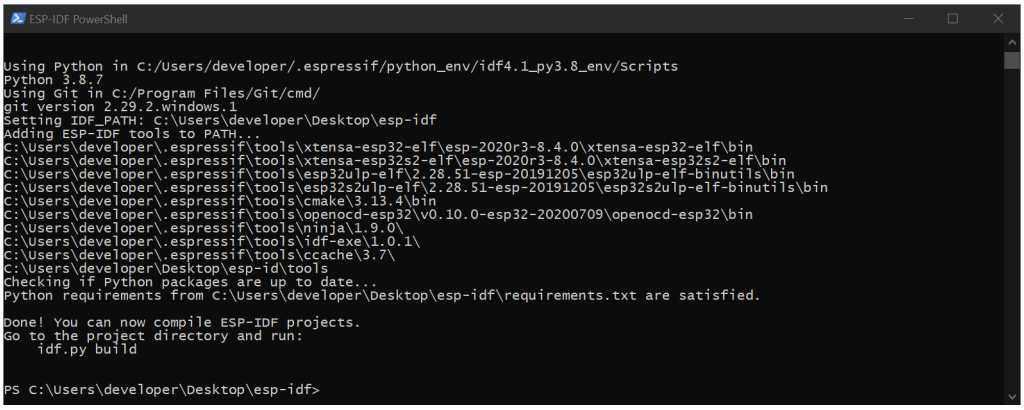

图 49: ESP-IDF PowerShell

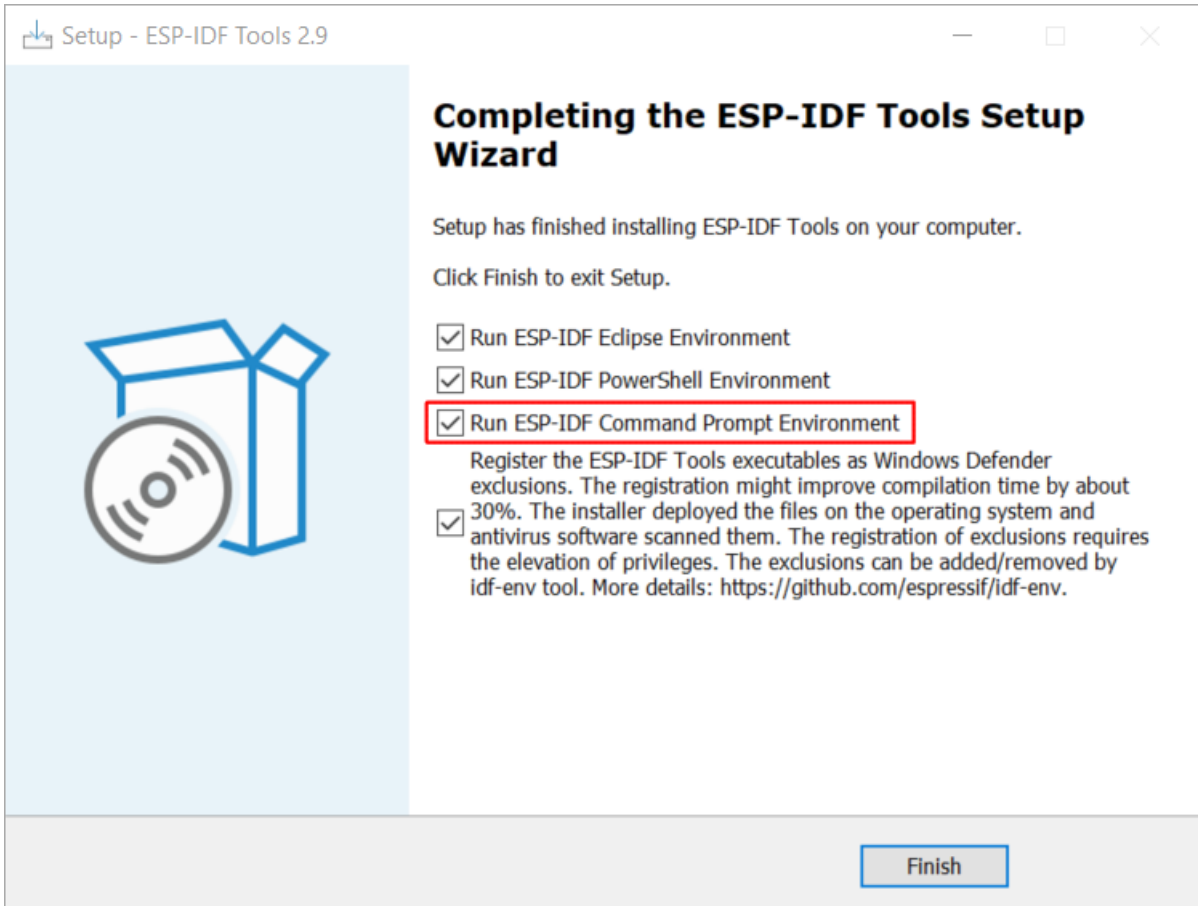

图 50: 完成 ESP-IDF 工具安装向导时运行 Run ESP-IDF Command Prompt (cmd.exe)

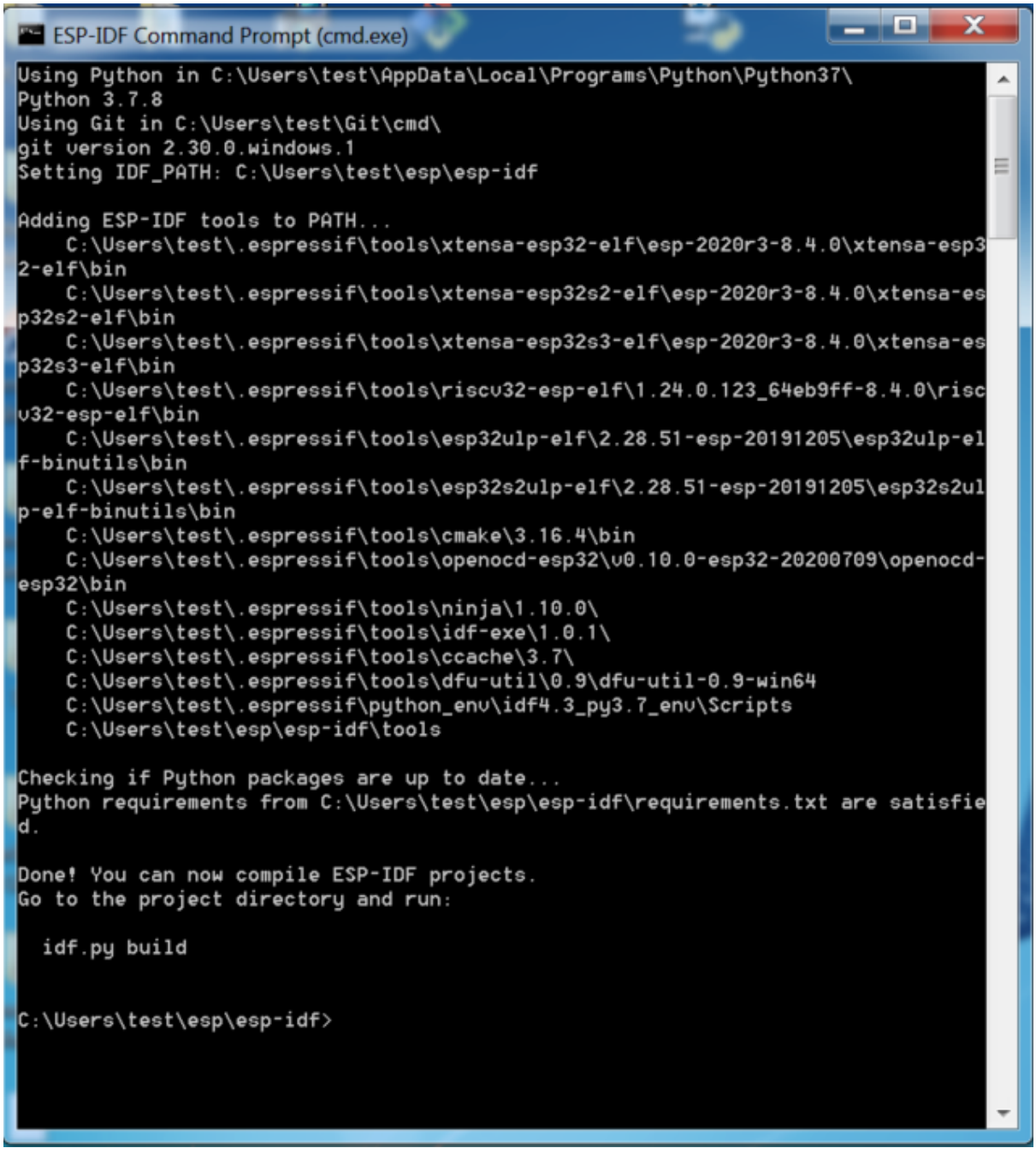

图 51: ESP-IDF 命令提示符窗口

使用命令提示符

在后续步骤中，我们将使用 Windows 的命令提示符进行操作。

ESP-IDF 工具安装器可在“开始”菜单中，创建一个打开 ESP-IDF 命令提示符窗口的快捷方式。本快捷方式可以打开 Windows 命令提示符（即 cmd.exe），并运行 `export.bat` 脚本以设置各环境变量（比如 `PATH`，`IDF_PATH` 等）。此外，您可还以通过 Windows 命令提示符使用各种已经安装的工具。

注意，本快捷方式仅适用 ESP-IDF 工具安装器中指定的 ESP-IDF 路径。如果您的电脑上存在多个 ESP-IDF 路径（比如您需要不同版本的 ESP-IDF），您有以下两种解决方法：

1. 为 ESP-IDF 工具安装器创建的快捷方式创建一个副本，并将新快捷方式的 ESP-IDF 工作路径指定为您希望使用的 ESP-IDF 路径。
2. 或者，您可以运行 `cmd.exe`，并切换至您希望使用的 ESP-IDF 目录，然后运行 `export.bat`。注意，这种方法要求 `PATH` 中存在 Python 和 Git。如果您在使用时遇到有关“找不到 Python 或 Git”的错误信息，请使用第一种方法。

后续步骤

当 ESP-IDF 工具安装器安装成功后，开发环境设置也到此结束。后续开发步骤，请前往*第五步：开始创建工程* 查看。

相关文档

想要自定义安装流程的高阶用户可参照：

在 Windows 环境下更新 ESP-IDF 工具

使用脚本安装 ESP-IDF 工具 请从 Windows “命令提示符”窗口，切换至 ESP-IDF 的安装目录。然后运行：

```
install.bat
```

对于 Powershell，请切换至 ESP-IDF 的安装目录。然后运行：

```
install.ps1
```

该命令可下载并安装 ESP-IDF 所需的工具。如您已经安装了某个版本的工具，则该命令将无效。该工具的下载安装位置由 ESP-IDF 工具安装器的设置决定，默认情况下为：`C:\Users\username\.espressif`。

使用“导出脚本”将 ESP-IDF 工具添加至 PATH 环境变量 ESP-IDF 工具安装器将在“开始菜单”为“ESP-IDF 命令提示符”创建快捷方式。点击该快捷方式可打开 Windows 命令提示符窗口，您可在该窗口使用所有已安装的工具。

有些情况下，您正在使用的命令提示符窗口并不是通过快捷方式打开的，此时如果想要在该窗口使用 ESP-IDF，您可以根据下方步骤将 ESP-IDF 工具添加至 PATH 环境变量。

首先，请打开需要使用 ESP-IDF 的命令提示符窗口，切换至安装 ESP-IDF 的目录，然后执行 `export.bat`，具体命令如下：

```
cd %userprofile%\esp\esp-idf
export.bat
```

对于 Powershell 用户，请同样切换至安装 ESP-IDF 的目录，然后执行 `export.ps1`，具体命令如下：

```
cd ~/esp/esp-idf
export.ps1
```

运行完成后，您就可以通过命令提示符使用 ESP-IDF 工具了。

1.5.2 Linux 平台工具链的标准设置

安装准备

编译 ESP-IDF 需要以下软件包。请根据使用的系统，选择合适的安装命令，如下所示：

- Ubuntu 和 Debian:

```
sudo apt-get install git wget flex bison gperf python3 python3-pip python3-
↪setuptools cmake ninja-build ccache libffi-dev libssl-dev dfu-util libusb-1.
↪0-0
```

- CentOS 7 & 8:

```
sudo yum -y update && sudo yum install git wget flex bison gperf python3␣
↪python3-pip python3-setuptools cmake ninja-build ccache dfu-util libusbx
```

目前仍然支持 CentOS 7，但为了更好的用户体验，建议使用 CentOS 8。

- Arch:

```
sudo pacman -S --needed gcc git make flex bison gperf python-pip cmake ninja␣
↪ccache dfu-util libusb
```

注解:

- 使用 ESP-IDF 需要 CMake 3.5 或以上版本。较早的 Linux 发行版可能需要升级自身的软件源仓库，或开启 backports 套件库，或安装“cmake3”软件包（不是安装“cmake”）。
- 如果上述列表中，并没有您使用的系统，请参考您所用系统的相关文档，查看安装软件包所用的命令。

其他提示

权限问题 /dev/ttyUSB0 使用某些 Linux 版本向 ESP32 烧录固件时，可能会出现 `Failed to open port /dev/ttyUSB0` 错误消息。此时可以将用户添加至*Linux Dialout 组*。

修复 Ubuntu 16.04 损坏的 pip

`python3-pip` 包可能已损坏无法升级。需使用脚本 get-pip.py 手动删除并安装该包:

```
apt remove python3-pip python3-virtualenv; rm -r ~/.local
rm -r ~/.espressif/python_env && python get-pip.py
```

停用 Python 2

Python 2 已经 结束生命周期，ESP-IDF 很快将不再支持 Python 2。请安装 Python 3.6 或以上版本。可参考上面列出的目前主流 Linux 发行版的安装说明。

后续步骤

继续设置开发环境，请前往*第二步：获取 ESP-IDF* 章节。

1.5.3 macOS 平台工具链的标准设置

安装准备

ESP-IDF 将使用 macOS 上默认安装的 Python 版本。

- 安装 pip:

```
sudo easy_install pip
```

- 安装 CMake 和 Ninja 编译工具：
  - 若有 HomeBrew，您可以运行:

```
brew install cmake ninja dfu-util
```

  - 若有 MacPorts，您可以运行:

```
sudo port install cmake ninja dfu-util
```

  - 若以上均不适用，请访问 CMake 和 Ninja 主页，查询有关 macOS 平台的下载安装问题。
- 强烈建议同时安装 ccache 以获得更快的编译速度。如有 HomeBrew，可通过 MacPorts 上的 `brew install ccache` 或 `sudo port install ccache` 完成安装。

注解: 如您在上述任何步骤中遇到以下错误:

```
``xcrun: error: invalid active developer path (/Library/Developer/
↪CommandLineTools), missing xcrun at:/Library/Developer/CommandLineTools/usr/bin/
↪xcrun``
```

则必须安装 XCode 命令行工具，具体可运行 `xcode-select --install`。

安装 Python 3 Catalina 10.15 发布说明 中表示不推荐使用 Python 2.7 版本，在未来的 macOS 版本中也不会默认包含 Python 2.7。执行以下命令来检查您当前使用的 Python 版本:

```
python --version
```

如果输出结果是 `Python 2.7.17`，则代表您的默认解析器是 Python 2.7。这时需要您运行以下命令检查电脑上是否已经安装过 Python 3:

```
python3 --version
```

如果运行上述命令出现错误，则代表电脑上没有安装 Python 3。

请根据以下步骤安装 Python 3：

- 使用 HomeBrew 进行安装的方法如下:

```
brew install python3
```

- 使用 MacPorts 进行安装的方法如下:

```
sudo port install python38
```

停用 Python 2

Python 2 已经 结束生命周期，ESP-IDF 很快将不再支持 Python 2。请安装 Python 3.6 或以上版本。可参考上面列出的 macOS 安装说明。

后续步骤

请前往第二步：获取 *ESP-IDF* 章节继续设置开发环境。

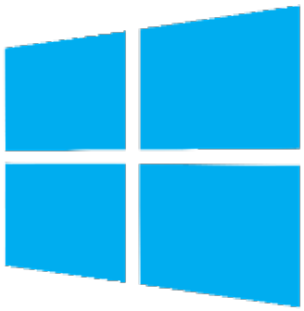		
Windows	Linux	macOS

注解： 在本文档中，Linux 和 macOS 操作系统中 ESP-IDF 的默认安装路径为 `~/esp`；Windows 操作系统中的默认安装路径为 `%userprofile%\esp`。您也可以将 ESP-IDF 安装在任何其他路径下，但请注意在使用命令行时进行相应替换。注意，ESP-IDF 不支持带有空格的路径。

1.6 第二步：获取 ESP-IDF

在围绕 ESP32 构建应用程序之前，请先获取乐鑫提供的软件库文件 ESP-IDF 仓库。

获取 ESP-IDF 的本地副本：打开终端，切换到您要保存 ESP-IDF 的工作目录，使用 `git clone` 命令克隆远程仓库。针对不同操作系统的详细步骤，请见下文。

1.6.1 Linux 和 macOS 操作系统

打开终端，后运行以下命令：

```
mkdir -p ~/esp
cd ~/esp
git clone -b v4.3.6 --recursive https://github.com/espressif/esp-idf.git
```

ESP-IDF 将下载至 `~/esp/esp-idf`。

请前往*ESP-IDF 版本简介*，查看 ESP-IDF 不同版本的具体适用场景。

1.6.2 Windows 操作系统

除了安装必要工具外，第一步中介绍的*ESP-IDF 工具安装器* 也能同时下载 ESP-IDF 本地副本。

请前往*ESP-IDF 版本简介*，查看 ESP-IDF 不同版本的具体适用场景。

除了使用 ESP-IDF 工具安装器，您也可以参考指南 手动下载 ESP-IDF。

1.7 第三步：设置工具

除了 ESP-IDF 本身，您还需要安装 ESP-IDF 使用的各种工具，比如编译器、调试器、Python 包等。

1.7.1 Windows 操作系统

请根据第一步中对 Windows (*ESP-IDF 工具安装器*) 的介绍，安装所有必需工具。

除了使用 ESP-IDF 工具安装器，您也可以通过 **命令提示符**窗口手动安装这些工具。具体步骤见下：

```
cd %userprofile%\esp\esp-idf
install.bat esp32
```

或使用 Windows PowerShell

```
cd ~/esp/esp-idf
./install.ps1 esp32
```

1.7.2 Linux 和 macOS 操作系统

```
cd ~/esp/esp-idf
./install.sh esp32
```

或使用 Fish shell

```
cd ~/esp/esp-idf
./install.fish esp32
```

注解： 通过一次性指定多个目标，可为多个目标芯片同时安装工具，如运行 `./install.sh esp32,esp32c3,esp32s3`。通过运行 `./install.sh` 或 `./install.sh all` 可一次性为所有支持的目标芯片安装工具。

1.7.3 下载工具备选方案

ESP-IDF 工具安装器会下载 Github 发布版本中附带的一些工具，如果访问 Github 较为缓慢，则可以设置一个环境变量，实现优先选择 Espressif 的下载服务器进行 Github 资源下载。

注解： 该设置只影响从 Github 发布版本中下载的单个工具，它并不会改变访问任何 Git 仓库的 URL。

Windows 操作系统

如果希望在运行 ESP-IDF 工具安装器或在使用命令行安装工具时优先选择 Espressif 下载服务器，可通过以下方式设置：打开系统控制面板，然后点击高级设置，添加一个新的环境变量（类型为用户或系统都可以，名称为 `IDF_GITHUB_ASSETS`，值为 `dl.espressif.com/github_assets`），最后点击确定。

如果在添加新的环境变量前命令行窗口或 ESP-IDF 工具安装器窗口已经打开，请关闭这些窗口后重新打开。

当设置好这个新的环境变量后，ESP-IDF 工具安装器以及命令行安装程序将会优先选择 Espressif 下载服务器。

Linux 和 macOS 操作系统

要在安装工具时优先选择 Espressif 下载服务器，请在运行 `install.sh` 时使用以下命令：

```
cd ~/esp/esp-idf
export IDF_GITHUB_ASSETS="dl.espressif.com/github_assets"
./install.sh
```

1.7.4 自定义工具安装路径

本步骤中介绍的脚本将 ESP-IDF 所需的编译工具默认安装在用户的根目录中，即 Linux 和 macOS 系统中的 `$HOME/.espressif` 和 Windows 系统的 `%USERPROFILE%\.espressif`。此外，您可以将工具安装到其他目录中，但请在运行安装脚本前，重新设置环境变量 `IDF_TOOLS_PATH`。注意，请确保您的用户已经具备了读写该路径的权限。

如果修改了 `IDF_TOOLS_PATH` 变量，请确保该变量在每次执行安装脚本 (`install.bat`、`install.ps1` 或 `install.sh`) 和导出脚本 (`export.bat`、`export.ps1` 或 `export.sh`) 均保持一致。

1.8 第四步：设置环境变量

此时，您刚刚安装的工具尚未添加至 PATH 环境变量，无法通过“命令窗口”使用这些工具。因此，必须设置一些环境变量，这可以通过 ESP-IDF 提供的另一个脚本完成。

1.8.1 Windows 操作系统

Windows 安装器（*ESP-IDF 工具安装器*）可在“开始”菜单创建一个“ESP-IDF Command Prompt”快捷方式。该快捷方式可以打开命令提示符窗口，并设置所有环境变量。您可以点击该快捷方式，然后继续下一步。

此外，如果您希望在当下命令提示符窗口使用 ESP-IDF，请使用下方代码：

```
%userprofile%\esp\esp-idf\export.bat
```

或使用 Windows PowerShell

```
.$HOME/esp/esp-idf/export.ps1
```

1.8.2 Linux 和 macOS 操作系统

请在需要运行 ESP-IDF 的终端窗口运行以下命令：

```
. $HOME/esp/esp-idf/export.sh
```

对于 fish shell（仅支持 fish 3.0.0 及以上版本），请运行以下命令：

```
. $HOME/esp/esp-idf/export.fish
```

注意，命令开始的“.”与路径之间应有一个空格！

如果您需要经常运行 ESP-IDF，您可以为执行 `export.sh` 创建一个别名，具体步骤如下：

1. 复制并粘贴以下命令到 shell 配置文件中（`.profile`，`.bashrc`，`.zprofile` 等）

   ```
   alias get_idf='. $HOME/esp/esp-idf/export.sh'
   ```

2. 通过重启终端窗口或运行 `source [path to profile]`，如 `source ~/.bashrc` 来刷新配置文件。

现在您可以在任何终端窗口中运行 `get_idf` 来设置或刷新 esp-idf 环境。

这里不建议您直接将 `export.sh` 添加到 shell 的配置文件。因为这会导致在每个终端会话中都激活 IDF 虚拟环境（包括无需使用 IDF 的情况），从而破坏使用虚拟环境的目的，并可能影响其他软件的使用。

1.9 第五步：开始创建工程

现在，您可以开始准备开发 ESP32 应用程序了。您可以从 ESP-IDF 中 examples 目录下的 get-started/hello_world 工程开始。

将 get-started/hello_world 工程复制至您本地的 ~/esp 目录下：

1.9.1 Linux 和 macOS 操作系统

```
cd ~/esp
cp -r $IDF_PATH/examples/get-started/hello_world .
```

1.9.2 Windows 操作系统

```
cd %userprofile%\esp
xcopy /e /i %IDF_PATH%\examples\get-started\hello_world hello_world
```

ESP-IDF 的 examples 目录下有一系列示例工程，都可以按照上面的方法进行创建。您可以按照上述方法复制并运行其中的任何示例，也可以直接编译示例，无需进行复制。

重要： ESP-IDF 编译系统不支持带有空格的路径。

1.10 第六步：连接设备

现在，请将您的 ESP32 开发板连接到 PC，并查看开发板使用的串口。

通常，串口在不同操作系统下显示的名称有所不同：

- **Windows 操作系统：** COM1 等
- **Linux 操作系统：** 以 /dev/tty 开始
- **macOS 操作系统：** 以 /dev/cu. 开始

有关如何查看串口名称的详细信息，请见*与 ESP32 创建串口连接*。

注解： 请记住串口名，您会在下面的步骤中用到。

1.11 第七步：配置

请进入*第五步：开始创建工程* 中提到的 hello_world 目录，并运行工程配置工具 menuconfig。

1.11.1 Linux 和 macOS 操作系统

```
cd ~/esp/hello_world
idf.py set-target esp32
idf.py menuconfig
```

1.11.2 Windows 操作系统

```
cd %userprofile%\esp\hello_world
idf.py set-target esp32
idf.py menuconfig
```

打开一个新项目后，应首先设置“目标”芯片 `idf.py set-target esp32`。注意，此操作将清除并初始化项目之前的编译和配置（如有）。您也可以直接将“目标”配置为环境变量（此时可跳过该步骤）。更多信息，请见选择目标芯片。

如果之前的步骤都正确，则会显示下面的菜单：

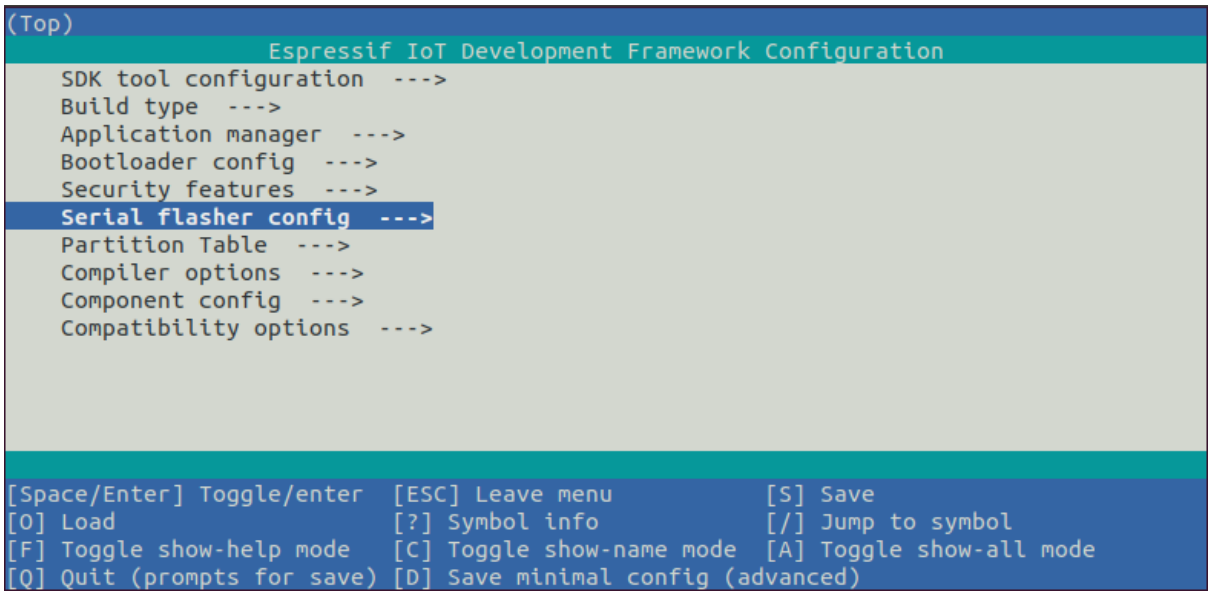

图 52: 工程配置—主窗口

您可以通过此菜单设置项目的具体变量，包括 Wi-Fi 网络名称、密码和处理器速度等. `hello_world` 示例项目会以默认配置运行，因此可以跳过使用 `menuconfig` 进行项目配置这一步骤。

注意: 如果您使用的是 ESP32-DevKitC（板载 ESP32-SOLO-1 模组）或 ESP32-DevKitM-1（板载 ESP32-MINI-1(1U) 模组），请在烧写示例程序前，前往 `menuconfig` 中使能单核模式（*CONFIG_FREERTOS_UNICORE*）。

注解: 您终端窗口中显示出的菜单颜色可能会与上图不同。您可以通过选项 `--style` 来改变外观。更多信息，请运行 `idf.py menuconfig --help` 命令。

1.12 第八步：编译工程

请使用以下命令，编译烧录工程：

```
idf.py build
```

运行以上命令可以编译应用程序和所有 ESP-IDF 组件，接着生成 bootloader、分区表和应用程序二进制文件。

```
$ idf.py build
Running cmake in directory /path/to/hello_world/build
Executing "cmake -G Ninja --warn-uninitialized /path/to/hello_world"...
Warn about uninitialized values.
-- Found Git:/usr/bin/git (found version "2.17.0")
-- Building empty aws_iot component due to configuration
-- Component names: ...
-- Component paths: ...

... (more lines of build system output)

[527/527] Generating hello-world.bin
esptool.py v2.3.1

Project build complete. To flash, run this command:
../../../components/esptool_py/esptool/esptool.py -p (PORT) -b 921600 write_flash -
↪-flash_mode dio --flash_size detect --flash_freq 40m 0x10000 build/hello-world.
↪bin  build 0x1000 build/bootloader/bootloader.bin 0x8000 build/partition_table/
↪partition-table.bin
or run 'idf.py -p PORT flash'
```

如果一切正常，编译完成后将生成.bin 文件。

1.13 第九步：烧录到设备

请使用以下命令，将刚刚生成的二进制文件 (bootloader.bin, partition-table.bin 和 hello-world.bin) 烧录至您的 ESP32 开发板：

```
idf.py -p PORT [-b BAUD] flash
```

请将 PORT 替换为 ESP32 开发板的串口名称，具体可见*第六步：连接设备*。

您还可以将 BAUD 替换为您希望的烧录波特率。默认波特率为 `460800`。

更多有关 idf.py 参数的详情，请见*idf.py*。

注解： 勾选 `flash` 选项将自动编译并烧录工程，因此无需再运行 `idf.py build`。

1.13.1 烧录过程中可能遇到的问题

如果在运行给定命令时出现如“连接失败”这样的错误，原因之一则可能是运行 `esptool.py` 出现错误。`esptool.py` 是构建系统调用的程序，用于重置芯片、与 ROM 引导加载器交互以及烧录固件的工具。解决该问题的一个简单的方法就是按照以下步骤进行手动复位。如果问题仍未解决，请参考 Troubleshooting 获取更多信息。

`esptool.py` 通过使 USB 转串口转接器芯片（如 FTDI 或 CP210x）的 DTR 和 RTS 控制线生效来自动复位 ESP32（请参考*与 ESP32 创建串口连接* 获取更多详细信息）。DTR 和 RTS 控制线又连接到 ESP32 的 `GPIO0` 和 `CHIP_PU` (EN) 管脚上，因此 DTR 和 RTS 的电压电平变化会使 ESP32 进入固件下载模式。相关示例可查看 ESP32 DevKitC 开发板的 原理图。

一般来说，使用官方的 esp-idf 开发板不会出现问题。但是，`esptool.py` 在以下情况下不能自动重置硬件。

- 您的硬件没有连接到 `GPIO0` 和 `CIHP_PU` 的 DTR 和 RTS 控制线。
- DTR 和 RTS 控制线的配置方式不同
- 根本没有这样的串行控制线路

根据您硬件的种类，也可以将您 ESP32 开发板手动设置成固件下载模式（复位）。

- 对于 Espressif 的开发板，您可以参考对应开发板的入门指南或用户指南。例如，可以通过按住 **Boot** 按钮 (GPIO0) 再按住 **EN** 按钮 (CHIP_PU) 来手动复位 esp-idf 开发板。
- 对于其他类型的硬件，可以尝试将 GPIO0 拉低。

1.13.2 常规操作

在烧录过程中，您会看到类似如下的输出日志：

```
...
esptool.py --chip esp32 -p /dev/ttyUSB0 -b 460800 --before=default_reset --
↪after=hard_reset write_flash --flash_mode dio --flash_freq 40m --flash_size 2MB␣
↪0x8000 partition_table/partition-table.bin 0x1000 bootloader/bootloader.bin␣
↪0x10000 hello-world.bin
esptool.py v3.0-dev
Serial port /dev/ttyUSB0
Connecting........_
Chip is ESP32D0WDQ6 (revision 0)
Features: WiFi, BT, Dual Core, Coding Scheme None
Crystal is 40MHz
MAC: 24:0a:c4:05:b9:14
Uploading stub...
Running stub...
Stub running...
Changing baud rate to 460800
Changed.
Configuring flash size...
Compressed 3072 bytes to 103...
Writing at 0x00008000... (100 %)
Wrote 3072 bytes (103 compressed) at 0x00008000 in 0.0 seconds (effective 5962.8␣
↪kbit/s)...
Hash of data verified.
Compressed 26096 bytes to 15408...
Writing at 0x00001000... (100 %)
Wrote 26096 bytes (15408 compressed) at 0x00001000 in 0.4 seconds (effective 546.7␣
↪kbit/s)...
Hash of data verified.
Compressed 147104 bytes to 77364...
Writing at 0x00010000... (20 %)
Writing at 0x00014000... (40 %)
Writing at 0x00018000... (60 %)
Writing at 0x0001c000... (80 %)
Writing at 0x00020000... (100 %)
Wrote 147104 bytes (77364 compressed) at 0x00010000 in 1.9 seconds (effective 615.
↪5 kbit/s)...
Hash of data verified.

Leaving...
Hard resetting via RTS pin...
Done
```

如果一切顺利，烧录完成后，开发板将会复位，应用程序 “hello_world” 开始运行。

如果您希望使用 Eclipse 或是 VS Code IDE，而非 idf.py，请参考*Eclipse 指南*，以及*VS Code 指南*。

1.14 第十步：监视器

您可以使用 idf.py -p PORT monitor 命令，监视 “hello_world” 工程的运行情况。注意，不要忘记将 PORT 替换为您的串口名称。

运行该命令后，*IDF 监视器* 应用程序将启动：：

```
$ idf.py -p /dev/ttyUSB0 monitor
Running idf_monitor in directory [...]/esp/hello_world/build
Executing "python [...]/esp-idf/tools/idf_monitor.py -b 115200 [...]/esp/hello_
↪world/build/hello-world.elf"...
--- idf_monitor on /dev/ttyUSB0 115200 ---
--- Quit: Ctrl+] | Menu: Ctrl+T | Help: Ctrl+T followed by Ctrl+H ---
ets Jun  8 2016 00:22:57

rst:0x1 (POWERON_RESET),boot:0x13 (SPI_FAST_FLASH_BOOT)
ets Jun  8 2016 00:22:57
...
```

此时，您就可以在启动日志和诊断日志之后，看到打印的“Hello world!”了。

```
...
Hello world!
Restarting in 10 seconds...
This is esp32 chip with 2 CPU core(s), WiFi/BT/BLE, silicon revision 1, 2MB␣
↪external flash
Minimum free heap size: 298968 bytes
Restarting in 9 seconds...
Restarting in 8 seconds...
Restarting in 7 seconds...
```

您可使用快捷键 `Ctrl+]`，退出 IDF 监视器。

如果 IDF 监视器在烧录后很快发生错误，或打印信息全是乱码（如下），很有可能是因为您的开发板采用了 26 MHz 晶振，而 ESP-IDF 默认支持大多数开发板使用的 40 MHz 晶振。

```
e???)(Xn@?y.!??(?PW+)??Hn9a￣/9?!?t5??P?~?k??e?ea?5?jA
~zY??Y(1?,1 ?? e???)(Xn@?y.!Dr?zY(? jpi?|?+z5Ymvp
```

此时，您可以：

1. 退出监视器。
2. 打开*menuconfig*。
3. 进入 `Component config` -> `ESP32-specific` -> `Main XTAL frequency` 进行配置，将*CONFIG_ESP32_XTAL_FREQ_SEL* 设置为 26 MHz。
4. 然后，请重新编译和烧录 应用程序。

注解： 您也可以运行以下命令，一次性执行构建、烧录和监视过程：

```
idf.py -p PORT flash monitor
```

此外，

- 请前往*IDF 监视器*，了解更多使用 IDF 监视器的快捷键和其他详情。
- 请前往*idf.py*，查看更多 `idf.py` 命令和选项。

恭喜，您已完成 ESP32 的入门学习！

现在，您可以尝试一些其他 examples，或者直接开发自己的应用程序。

重要： 一些示例程序不支持 ESP32，因为 ESP32 中不包含所需的硬件。

在编译示例程序前请查看 README 文件中 `Supported Targets` 表格。如果表格中包含 ESP32，或者不存在这个表格，那么即表示 ESP32 支持这个示例程序。

1.15 更新 ESP-IDF

乐鑫会不时推出更新版本的 ESP-IDF，修复 bug 或提供新的功能。因此，您在使用时，也应注意更新您本地的版本。最简单的方法是：直接删除您本地的 `esp-idf` 文件夹，然后按照第二步：获取 *ESP-IDF* 中的指示，重新完成克隆。

此外，您可以仅更新变更部分。具体方式，请前往更新 章节查看。

注意，更新完成后，请再次运行安装脚本，以防新版 ESP-IDF 所需的工具也有所更新。具体请参考第三步：设置工具。

一旦重新安装好工具，请使用导出脚本更新环境，具体请参考第四步：设置环境变量。

1.16 相关文档

1.16.1 与 ESP32 创建串口连接

本章节主要介绍如何创建 ESP32 和 PC 之间的串口连接。

连接 ESP32 和 PC

用 USB 线将 ESP32 开发板连接到 PC。如果设备驱动程序没有自动安装，请先确认 ESP32 开发板上的 USB 转串口芯片（或外部转串口适配器）型号，然后在网上搜索驱动程序，并进行手动安装。

以下是乐鑫 ESP32 开发板驱动程序的链接：

- CP210x: CP210x USB 至 UART 桥 VCP 驱动程序
- FTDI: FTDI 虚拟 COM 端口驱动程序

以上驱动仅供参考，请参考开发板用户指南，查看开发板具体使用的 USB 转串口芯片。一般情况下，当 ESP32 开发板与 PC 连接时，对应驱动程序应该已经被打包在操作系统中，并已经自动安装。

在 Windows 上查看端口

检查 Windows 设备管理器中的 COM 端口列表。断开 ESP32 与 PC 的连接，然后重新连接，查看哪个端口从列表中消失后又再次出现。

以下为 ESP32 DevKitC 和 ESP32 WROVER KIT 串口：

在 Linux 和 macOS 上查看端口

查看 ESP32 开发板（或外部转串口适配器）的串口设备名称，请将以下命令运行两次。首先，断开开发板或适配器，首次运行以下命令；然后，连接开发板或适配器，再次运行以下命令。其中，第二次运行命令后出现的端口即是 ESP32 对应的串口：

Linux:

```
ls /dev/tty*
```

macOS:

```
ls /dev/cu.*
```

注解： 对于 macOS 用户：若你没有看到串口，请检查你是否已按照《入门指南》安装了适用于你特定开发板的 USB/串口驱动程序。对于 macOS High Sierra (10.13) 的用户，你可能还需要手动允许驱动程序的

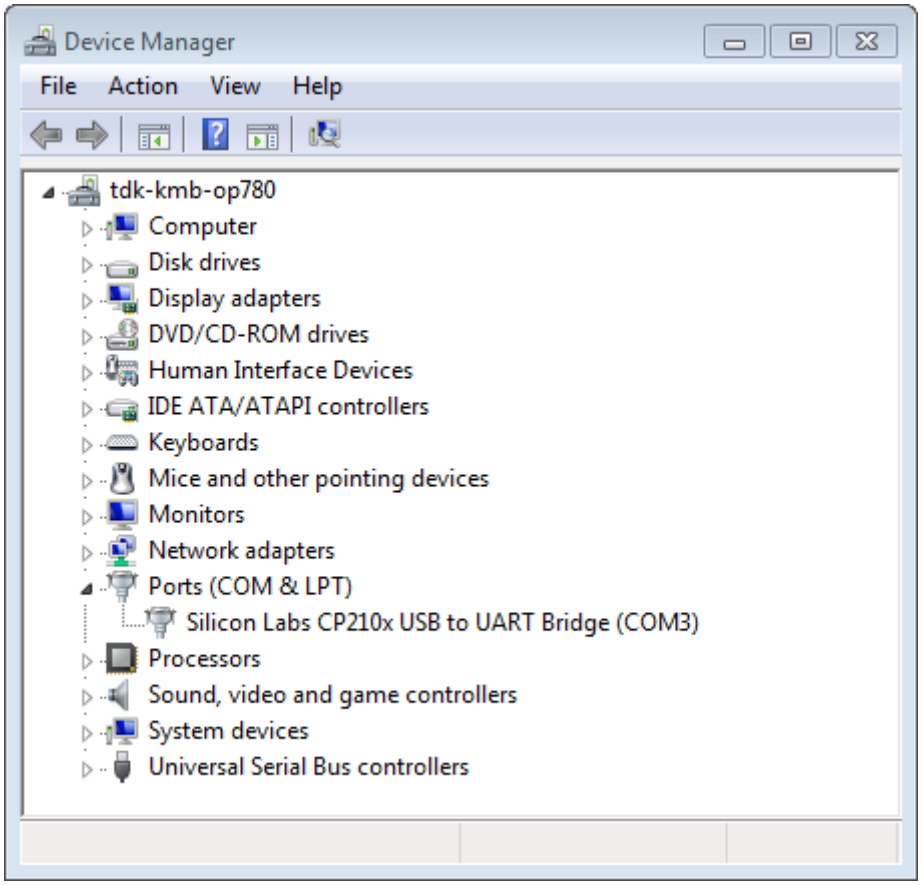

图 53: 设备管理器中 ESP32-DevKitC 的 USB 至 UART 桥

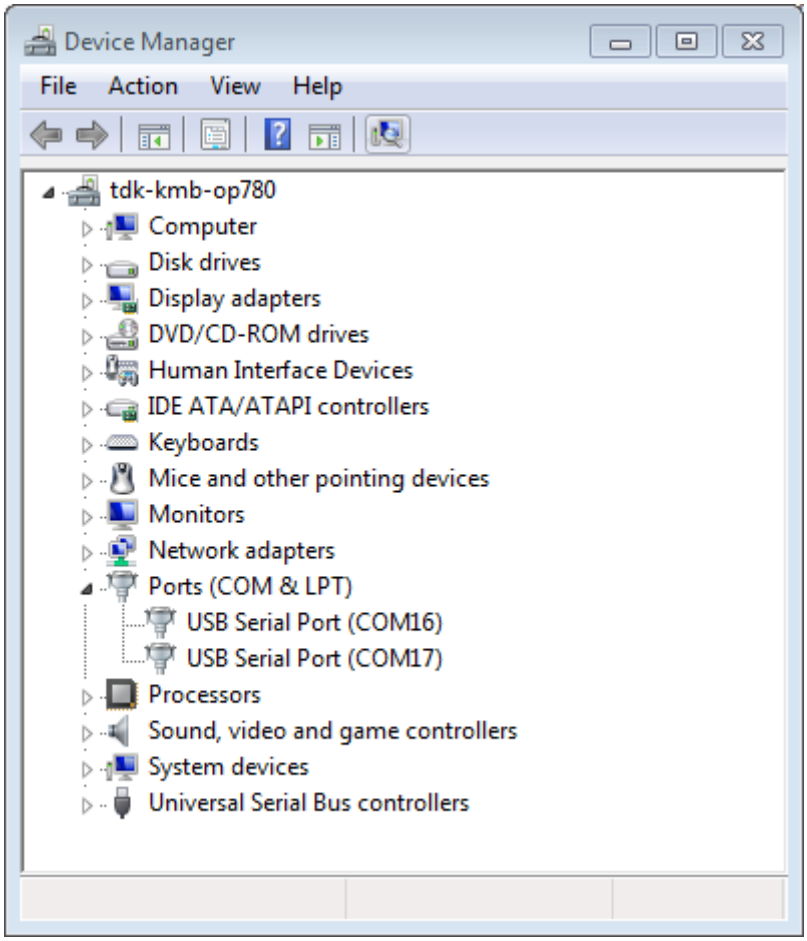

图 54: Windows 设备管理器中 ESP-WROVER-KIT 的两个 USB 串行端口

加载，具体可打开 系统偏好设置 -> 安全和隐私 -> 通用，检查是否有信息显示："来自开发人员的系统软件…"，其中开发人员的名称为 Silicon Labs 或 FTDI。

在 Linux 中添加用户到 dialout

当前登录用户应当可以通过 USB 对串口进行读写操作。在多数 Linux 版本中，您都可以通过以下命令，将用户添加到 dialout 组，从而获许读写权限:

```
sudo usermod -a -G dialout $USER
```

在 Arch Linux 中，需要通过以下命令将用户添加到 uucp 组中:

```
sudo usermod -a -G uucp $USER
```

请重新登录，确保串口读写权限生效。

确认串口连接

现在，请使用串口终端程序，查看重置 ESP32 后终端上是否有输出，从而验证串口连接是否可用。

Windows 和 Linux 操作系统 在本示例中，我们将使用 PuTTY SSH Client，PuTTY SSH Client 既可用于 Windows 也可用于 Linux。你也可以使用其他串口程序并设置如下的通信参数。

运行终端，配置在上述步骤中确认的串口：波特率 = 115200，数据位 = 8，停止位 = 1，奇偶校验 = N。以下截屏分别展示了如何在 Windows 和 Linux 中配置串口和上述通信参数（如 115200-8-1-N）。注意，这里一定要选择在上述步骤中确认的串口进行配置。

然后，请检查 ESP32 是否有打印日志。如有，请在终端打开串口进行查看。这里的日志内容取决于加载到 ESP32 的应用程序，请参考输出示例。

注解： 请在验证完串口通信正常后，关闭串口终端。如果您让终端一直保持打开的状态，之后上传固件时将无法访问串口。

macOS 操作系统 macOS 提供了 **屏幕**命令，因此您不用安装串口终端程序。

- 参考*在 Linux 和 macOS 上查看端口*，运行以下命令:

```
ls /dev/cu.*
```

- 您会看到类似如下输出:

```
/dev/cu.Bluetooth-Incoming-Port /dev/cu.SLAB_USBtoUART      /dev/cu.SLAB_
↪USBtoUART7
```

- 根据您连接到电脑上的开发板类型和数量，输出结果会有所不同。请选择开发板的设备名称，并运行以下命令:

```
screen /dev/cu.device_name 115200
```

将 device_name 替换为运行 ls /dev/cu.* 后出现的设备串口号。

- 您需要的正是 **屏幕**显示的日志。日志内容取决于加载到 ESP32 的应用程序，请参考输出示例。请使用 Ctrl-A + \ 键退出 **屏幕**会话。

注解： 请在验证完串口通信正常后，关闭 **屏幕**会话。如果直接关闭终端窗口而没有关闭 **屏幕**，之后上传固件时将无法访问串口。

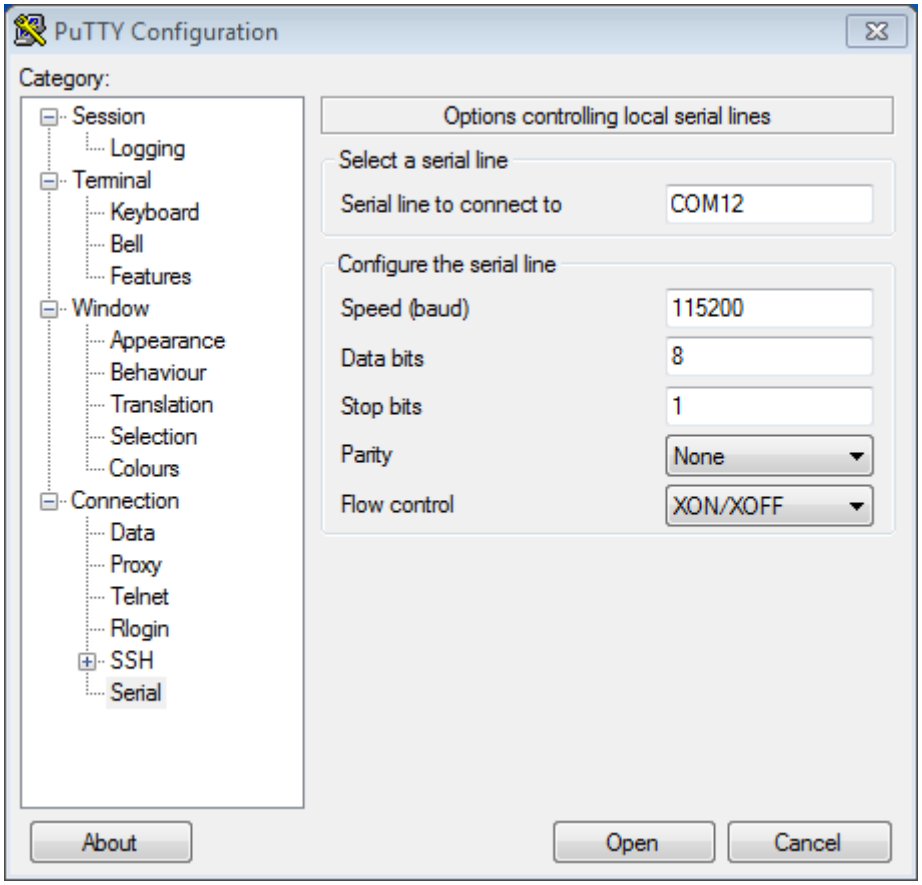

图 55: 在 Windows 操作系统中使用 PuTTY 设置串口通信参数

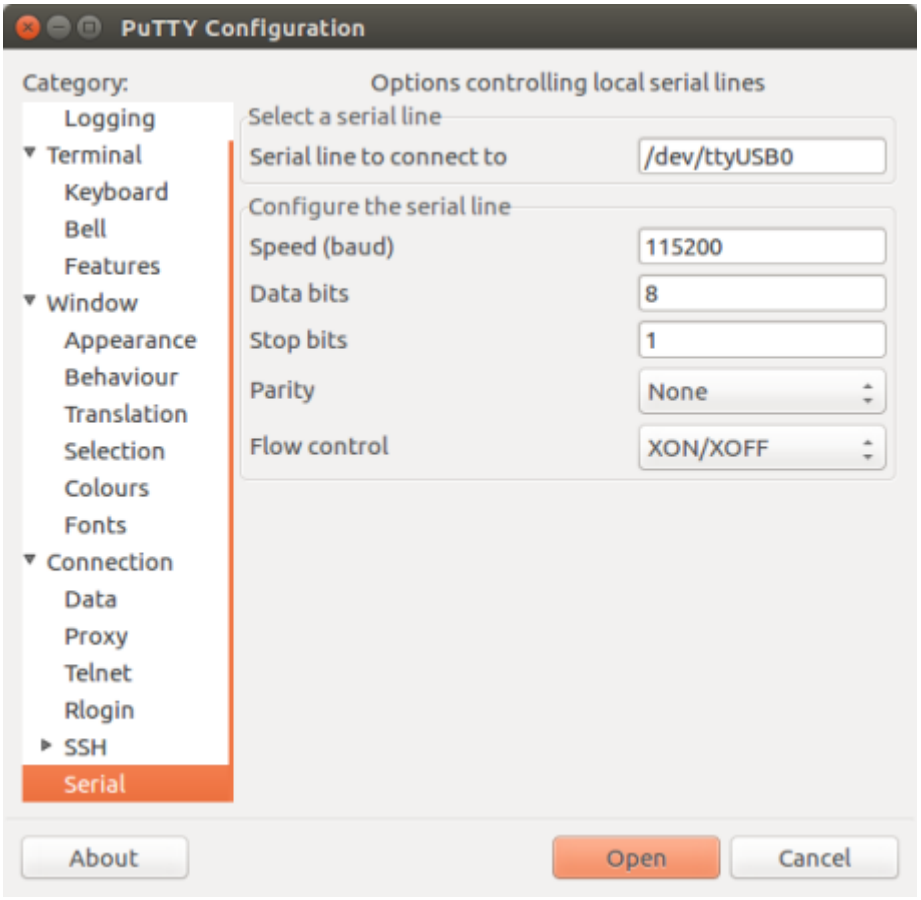

图 56: 在 Linux 操作系统中使用 PuTTY 设置串口通信参数

输出示例 以下是 ESP32 的一个日志示例。如果没看到任何输出，请尝试重置开发板。

```
ets Jun  8 2016 00:22:57

rst:0x5 (DEEPSLEEP_RESET),boot:0x13 (SPI_FAST_FLASH_BOOT)
ets Jun  8 2016 00:22:57

rst:0x7 (TG0WDT_SYS_RESET),boot:0x13 (SPI_FAST_FLASH_BOOT)
configsip: 0, SPIWP:0x00
clk_drv:0x00,q_drv:0x00,d_drv:0x00,cs0_drv:0x00,hd_drv:0x00,wp_drv:0x00
mode:DIO, clock div:2
load:0x3fff0008,len:8
load:0x3fff0010,len:3464
load:0x40078000,len:7828
load:0x40080000,len:252
entry 0x40080034
I (44) boot: ESP-IDF v2.0-rc1-401-gf9fba35 2nd stage bootloader
I (45) boot: compile time 18:48:10

...
```

如果打印出的日志是可读的（而不是乱码），则表示串口连接正常。此时，您可以继续进行安装，并最终将应用程序上载到 ESP32。

注解： 在某些串口接线方式下，在 ESP32 启动并开始打印串口日志前，需要在终端程序中禁用串口 RTS & DTR 管脚。该问题仅存在于将 RTS & DTR 管脚直接连接到 EN & GPIO0 管脚上的情况，绝大多数开发板（包括乐鑫所有的开发板）都没有这个问题。更多详细信息，请参考 esptool 文档。

如您在安装 ESP32 硬件开发的软件环境时，从*第六步：连接设备* 跳转到了这里，请从*第七步：配置* 继续阅读。

1.16.2 Eclipse IDE 创建和烧录指南

ESP-IDF V4.0 默认采用基于 CMake 的构建系统。

针对 CMake 构建系统，ESP-IDF 有一款新的 Eclipse 插件。具体操作指南，请见 ESP-IDF Eclipse 插件。

注解： ESP-IDF Eclipse 插件 中使用的是 macOS 截图，但安装指南对 Windows、Linux 和 macOS 均适用。

如需使用针对 GNU Make 传统构建系统的 Eclipse IDE 开发环境，请前往*快速入门（传统 GNU Make）*，查看*Eclipse IDE 的创建和烧录指南（传统 GNU Make）*。

1.16.3 VS Code IDE 快速入门

我们支持 VS code，并且致力于为所有与 ESP-IDF 相关的操作提供完善的端到端支持，包括构建、烧录、监控、调试、追踪、core-dump、以及系统追踪查看器等操作。

快速安装指南

推荐您从 VS Code 插件市场 中下载 ESP-IDF VS Code 插件，或根据 快速安装指南 安装 ESP-IDF VS Code 插件。

查看 ESP-IDF VS Code 插件教程 *<https://github.com/espressif/vscode-esp-idf-extension/blob/master/docs/tutorial/toc.md>* 了解如何使用所有功能。

支持如下功能

- **安装程序**：帮助您迅速安装 ESP-IDF 及其相关工具链。
- **构建**：通过一键构建和多目标构建，轻松构建并部署您的应用程序。
- **烧录**：UART 和 JTAG 均可完成烧录。
- **监控**：内置终端带有监控功能，您可以在 VS Code 中启用 IDF 监控命令，操作方法和传统终端一样。
- 调试 *<https://github.com/espressif/vscode-esp-idf-extension/blob/master/docs/tutorial/debugging.md>*：提供立即可用的硬件调试功能，同时支持事后剖析调试如 core-dump 功能，分析 bug 更加方便。
- **GUI 菜单配置**：提供简化的用户界面，用于配置您的芯片。
- **应用程序追踪 & 堆追踪**：支持从应用程序中收集跟踪，并提供简化的用户界面分析跟踪。
- **系统视图查看器**：读取并显示 *.svdat* 文件到用户追踪界面，同时支持多个内核追踪视图。
- **IDF 二进制大小分析**：为分析二进制文件大小提供用户界面。
- Rainmaker Cloud：我们有内置的 Rainmaker Cloud 支持，您可以轻松编辑/读取连接的物联网设备的状态。
- **代码覆盖**：我们有内置的代码覆盖支持，将用颜色突出显示已经覆盖的行。我们也会在 IDE 内部直接渲染现有的 HTML 报告。

Bugs 问题 & 功能请求

如果您在使用 VS Code 或其某些功能上遇到问题，建议您在 论坛 或是 github 上提出您的问题，我们开发团队会对问题进行解答。

我们也欢迎您提出新的功能需求，正是由于用户要求新功能或是建议对现有功能进行改善，才成就我们今天所具备的大多数功能。欢迎您在 github 上提出功能请求。

1.16.4 IDF 监视器

IDF 监视器是一个串行终端程序，用于收发目标设备串口的串行数据，IDF 监视器同时还兼具 IDF 的其他特性。

在 IDF 中调用以下目标函数可以启用此监视器：

- **若使用 CMake 编译系统，则请调用**：`idf.py monitor`
- **若使用传统 GNU Make 编译系统，请调用**：`make monitor`

操作快捷键

为了方便与 IDF 监视器进行交互，请使用表中给出的快捷键。

快捷键	操作	描述
Ctrl+]	退出监视器程序	
Ctrl+T	菜单退出键	按下如下给出的任意键之一，并按指示操作。
• Ctrl+T	将菜单字符发送至远程	
• Ctrl+]	将 exit 字符发送至远程	
• Ctrl+P	重置目标设备，进入 Bootloader，通过 RTS 线暂停应用程序	重置目标设备，通过 RTS 线（如已连接）进入 Bootloader，此时开发板不运行任何程序。等待其他设备启动时可以使用此操作。
• Ctrl+R	通过 RTS 线重置目标设备	重置设备，并通过 RTS 线（如已连接）重新启动应用程序。
• Ctrl+F	编译并烧录此项目	暂停 idf_monitor，运行 `flash` 目标，然后恢复 idf_monitor。任何改动的源文件都会被重新编译，然后重新烧录。如果 idf_monitor 是以参数 `-E` 启动的，则会运行目标 `encrypted-flash`。
• Ctrl+A (或者 A)	仅编译及烧录应用程序	暂停 idf_monitor，运行 `app-flash` 目标，然后恢复 idf_monitor。这与 `flash` 类似，但只有主应用程序被编译并被重新烧录。如果 idf_monitor 是以参数 `-E` 启动的，则会运行目标 `encrypted-flash`。
• Ctrl+Y	停止/恢复在屏幕上打印日志输出	激活时，会丢弃所有传入的串行数据。允许在不退出监视器的情况下快速暂停和检查日志输出。
• Ctrl+L	停止/恢复向文件写入日志输出	在工程目录下创建一个文件，用于写入日志输出。可使用快捷键停止/恢复该功能（退出 IDF 监视器也会终止该功能）
• Ctrl+H (或者 H)	显示所有快捷键	
• Ctrl+X (或者 X)	退出监视器程序	

除了 `Ctrl-]` 和 `Ctrl-T`，其他快捷键信号会通过串口发送到目标设备。

兼具 IDF 特性

自动解码地址 ESP-IDF 输出形式为 `0x4_____` 的十六进制代码地址后，IDF 监视器将使用 addr2line 查找该地址在源代码中的位置和对应的函数名。

ESP-IDF 应用程序发生 crash 和 panic 事件时，将产生如下的寄存器转储和回溯:

```
Guru Meditation Error of type StoreProhibited occurred on core  0. Exception was␣
↪unhandled.
Register dump:
PC      : 0x400f360d  PS      : 0x00060330  A0      : 0x800dbf56  A1      :␣
↪0x3ffb7e00
A2      : 0x3ffb136c  A3      : 0x00000005  A4      : 0x00000000  A5      :␣
↪0x00000000
A6      : 0x00000000  A7      : 0x00000080  A8      : 0x00000000  A9      :␣
↪0x3ffb7dd0
A10     : 0x00000003  A11     : 0x00060f23  A12     : 0x00060f20  A13     :␣
↪0x3ffba6d0
```

(下页继续)

(续上页)

```
A14      : 0x00000047  A15      : 0x0000000f  SAR      : 0x00000019  EXCCAUSE:␣
↪0x0000001d
EXCVADDR: 0x00000000  LBEG     : 0x4000c46c  LEND     : 0x4000c477  LCOUNT  :␣
↪0x00000000

Backtrace: 0x400f360d:0x3ffb7e00 0x400dbf56:0x3ffb7e20 0x400dbf5e:0x3ffb7e40␣
↪0x400dbf82:0x3ffb7e60 0x400d071d:0x3ffb7e90
```

IDF 监视器为寄存器转储补充如下信息:

```
Guru Meditation Error of type StoreProhibited occurred on core  0. Exception was␣
↪unhandled.
Register dump:
PC       : 0x400f360d  PS       : 0x00060330  A0       : 0x800dbf56  A1       :␣
↪0x3ffb7e00
0x400f360d: do_something_to_crash at /home/gus/esp/32/idf/examples/get-started/
↪hello_world/main/./hello_world_main.c:57
(inlined by) inner_dont_crash at /home/gus/esp/32/idf/examples/get-started/hello_
↪world/main/./hello_world_main.c:52
A2       : 0x3ffb136c  A3       : 0x00000005  A4       : 0x00000000  A5       :␣
↪0x00000000
A6       : 0x00000000  A7       : 0x00000080  A8       : 0x00000000  A9       :␣
↪0x3ffb7dd0
A10      : 0x00000003  A11      : 0x00060f23  A12      : 0x00060f20  A13      :␣
↪0x3ffba6d0
A14      : 0x00000047  A15      : 0x0000000f  SAR      : 0x00000019  EXCCAUSE:␣
↪0x0000001d
EXCVADDR: 0x00000000  LBEG     : 0x4000c46c  LEND     : 0x4000c477  LCOUNT  :␣
↪0x00000000

Backtrace: 0x400f360d:0x3ffb7e00 0x400dbf56:0x3ffb7e20 0x400dbf5e:0x3ffb7e40␣
↪0x400dbf82:0x3ffb7e60 0x400d071d:0x3ffb7e90
0x400f360d: do_something_to_crash at /home/gus/esp/32/idf/examples/get-started/
↪hello_world/main/./hello_world_main.c:57
(inlined by) inner_dont_crash at /home/gus/esp/32/idf/examples/get-started/hello_
↪world/main/./hello_world_main.c:52
0x400dbf56: still_dont_crash at /home/gus/esp/32/idf/examples/get-started/hello_
↪world/main/./hello_world_main.c:47
0x400dbf5e: dont_crash at /home/gus/esp/32/idf/examples/get-started/hello_world/
↪main/./hello_world_main.c:42
0x400dbf82: app_main at /home/gus/esp/32/idf/examples/get-started/hello_world/main/
↪./hello_world_main.c:33
0x400d071d: main_task at /home/gus/esp/32/idf/components/esp32/./cpu_start.c:254
```

IDF 监视器在后台运行以下命令，解码各地址:

```
xtensa-esp32-elf-addr2line -pfiaC -e build/PROJECT.elf ADDRESS
```

注解: 将环境变量 `ESP_MONITOR_DECODE` 设置为 `0` 或者调用 idf_monitor.py 的特定命令行选项: `idf_monitor.py --disable-address-decoding` 来禁止地址解码。

配置 GDBStub 以启用 GDB 默认情况下，如果 ESP-IDF 应用程序发生 crash 事件，panic 处理器将在串口上打印相关寄存器和堆栈转储（类似上述情况），然后重置开发板。

或者选择配置 panic 处理器以运行 GDBStub，GDBStub 工具可以与 GDB 项目调试器进行通信，允许读取内存、检查调用堆栈帧和变量等。GDBStub 虽然没有 JTAG 通用，但不需要使用特殊硬件。

如需启用 GDBStub，请运行 `idf.py menuconfig`（适用于 CMake 编译系统），并将*CONFIG_ESP_SYSTEM_PANIC* 选项设置为 `Invoke GDBStub`。

在这种情况下，如果 panic 处理器被触发，只要 IDF 监视器监控到 GDBStub 已经加载，panic 处理器就会自动暂停串行监控并使用必要的参数运行 GDB。GDB 退出后，通过 RTS 串口线复位开发板。如果未连接 RTS 串口线，请按复位键，手动复位开发板。

IDF 监控器在后台运行如下命令:

```
xtensa-esp32-elf-gdb -ex "set serial baud BAUD" -ex "target remote PORT" -ex␣
↪interrupt build/PROJECT.elf
```

输出筛选 可以调用 `idf.py monitor --print-filter="xyz"` 启动 IDF 监视器，其中，`--print-filter` 是输出筛选的参数。参数默认值为空字符串，可打印任何内容。

若需对打印内容设置限制，可指定 `<tag>:<log_level>` 等选项，其中 `<tag>` 是标签字符串，`<log_level>` 是 {N, E, W, I, D, V, *} 集合中的一个字母，指的是日志级别。

例如，`PRINT_FILTER="tag1:W"` 只匹配并打印 `ESP_LOGW("tag1", ...)` 所写的输出，或者写在较低日志详细度级别的输出，即 `ESP_LOGE("tag1", ...)`。请勿指定 `<log_level>` 或使用详细级别默认值 `*`。

注解: 编译时，可以使用主日志在日志库 中禁用不需要的输出。也可以使用 IDF 监视器筛选输出来调整筛选设置，且无需重新编译应用程序。

应用程序标签不能包含空格、星号 `*`、冒号 `:`，以便兼容输出筛选功能。

如果应用程序输出的最后一行后面没有回车，可能会影响输出筛选功能，即，监视器开始打印该行，但后来发现该行不应该被写入。这是一个已知问题，可以通过添加回车来避免此问题（特别是在没有输出紧跟其后的情况下）。

筛选规则示例

- `*` 可用于匹配任何类型标签。但 `PRINT_FILTER="*:I tag1:E"` 打印关于 `tag1` 的输出时会报错，这是因为 `tag1` 规则比 `*` 规则的优先级高。
- 默认规则（空）等价于 `*:V`，因为在详细级别或更低级别匹配任意标签即意味匹配所有内容。
- `"*:N"` 不仅抑制了日志功能的输出，也抑制了 `printf` 的打印输出。为了避免这一问题，请使用 `*:E` 或更高的冗余级别。
- 规则 `"tag1:V"`、`"tag1:v"`、`"tag1:"`、`"tag1:*"` 和 `"tag1"` 等同。
- 规则 `"tag1:W tag1:E"` 等同于 `"tag1:E"`，这是因为后续出现的具有相同名称的标签会覆盖掉前一个标签。
- 规则 `"tag1:I tag2:W"` 仅在 Info 详细度级别或更低级别打印 `tag1`，在 Warning 详细度级别或更低级别打印 `tag2`。
- 规则 `"tag1:I tag2:W tag3:N"` 在本质上等同于上一规则，这是因为 `tag3:N` 指定 `tag3` 不打印。
- `tag3:N` 在规则 `"tag1:I tag2:W tag3:N *:V"` 中更有意义，这是因为如果没有 `tag3:N`，`tag3` 信息就可能打印出来了；`tag1` 和 `tag2` 错误信息会打印在指定的详细度级别（或更低级别），并默认打印所有内容。

高级筛选规则示例 如下日志是在没有设置任何筛选选项的情况下获得的:

```
load:0x40078000,len:13564
entry 0x40078d4c
E (31) esp_image: image at 0x30000 has invalid magic byte
W (31) esp_image: image at 0x30000 has invalid SPI mode 255
E (39) boot: Factory app partition is not bootable
I (568) cpu_start: Pro cpu up.
I (569) heap_init: Initializing. RAM available for dynamic allocation:
I (603) cpu_start: Pro cpu start user code
D (309) light_driver: [light_init, 74]:status: 1, mode: 2
```

(下页继续)

(续上页)

```
D (318) vfs: esp_vfs_register_fd_range is successful for range <54; 64) and VFS ID␣
↪1
I (328) wifi: wifi driver task: 3ffdbf84, prio:23, stack:4096, core=0
```

PRINT_FILTER="wifi esp_image:E light_driver:I" 筛选选项捕获的输出如下所示:

```
E (31) esp_image: image at 0x30000 has invalid magic byte
I (328) wifi: wifi driver task: 3ffdbf84, prio:23, stack:4096, core=0
```

PRINT_FILTER="light_driver:D esp_image:N boot:N cpu_start:N vfs:N wifi:N *:V" 选项的输出如下:

```
load:0x40078000,len:13564
entry 0x40078d4c
I (569) heap_init: Initializing. RAM available for dynamic allocation:
D (309) light_driver: [light_init, 74]:status: 1, mode: 2
```

IDF 监视器已知问题

Windows 环境下已知问题

- 若在 Windows 环境下，出现 “winpty: command not found” 错误，请运行 `pacman -S winpty` 进行修复。
- 由于 Windows 控制台限制，有些箭头键及其他一些特殊键无法在 GDB 中使用。
- 偶然情况下，`idf.py` 或 `make` 退出时，可能会在 IDF 监视器恢复之前暂停 30 秒。
- GDB 运行时，可能会暂停一段时间，然后才开始与 GDBStub 进行通信。

1.16.5 工具链的自定义设置

除了从乐鑫官网（请见第三步：设置工具）下载二进制工具链外，您还可以自行编译工具链。

如无特殊需求，建议直接使用我们提供的预编译二进制工具链。不过，您可以在以下情况考虑自行编译工具链:

- 需要定制工具链编译配置
- 需要使用其他 GCC 版本（如 4.8.5）
- 需要破解 gcc、newlib 或 libstdc++
- 有相关兴趣或时间充裕
- 不信任从网站下载的 bin 文件

如需自行编译工具链，请查看以下文档:

从零开始设置 Windows 环境下的工具链

除了使用*ESP-IDF 工具安装器*，用户也可以手动设置 Windows 环境下的工具链，这正是本文的主要内容。手动安装工具可以更好地控制安装流程，同时也方便高阶用户进行自定义安装。

使用 ESP-IDF 工具安装器对工具链及其他工具进行快速标准设置，请参照*Windows 平台工具链的标准设置*。

注解: 基于 GNU Make 的构建系统要求 Windows 兼容 MSYS2 Unix，基于 CMake 的构建系统则无此要求。

获取 ESP-IDF

注解： 较早版本 ESP-IDF 使用了 **MSYS2 bash 终端命令行**。目前，基于 CMake 的编译系统可使用常见的 **Windows 命令窗口**，即本指南中使用的终端。

请注意，如果您使用基于 bash 的终端或 PowerShell 终端，一些命令语法将与下面描述有所不同。

打开命令提示符，运行以下命令：

```
mkdir %userprofile%\esp
cd %userprofile%\esp
git clone -b v4.3.6 --recursive https://github.com/espressif/esp-idf.git
```

ESP-IDF 将下载至 `%userprofile%\esp\esp-idf`。

请前往*ESP-IDF 版本简介*，查看 ESP-IDF 不同版本的具体适用场景。

注解： `git clone` 命令的 `-b v4.3.6` 选项告诉 git 从 ESP-IDF 仓库中克隆与此版本的文档对应的分支。

注解： 作为备份，还可以从 Releases page 下载此稳定版本的 zip 文件。不要下载由 GitHub 自动生成的”源代码”的 zip 文件，它们不适用于 ESP-IDF。

注解： 在克隆远程仓库时，请加上可选参数 `--recursive` 。如果你已经克隆了 ESP-IDF 但没有加上此参数，请运行以下命令获取所有子模块

```
cd esp-idf
git submodule update --init
```

工具

CMake 工具 下载最新发布的 Windows 平台稳定版 CMake，并运行安装器。

当安装器询问“安装选项”时，选择“Add CMake to the system PATH for all users”（为所有用户的系统路径添加 CMake）或“Add CMake to the system PATH for the current user”（为当前用户的系统路径添加 CMake）。

Ninja 编译工具

注解： 目前，Ninja 仅提供支持 64 位 Windows 版本的 bin 文件。您也可以配合其他编译工具（如 mingw-make）在 32 位 Windows 版本中使用 CMake 和 `idf.py` 。但是目前暂无关于此工具的说明文档。

请从 下载页面 下载最新发布的 Windows 平台稳定版 Ninja。

适用于 Windows 平台的 Ninja 下载文件是一个.zip 文件，包含一个 `ninja.exe` 文件。您需要将该文件解压到目录，并*添加到 Path 环境变量* （或者选择解压到 Path 变量中已有的目录）。

Python 下载并运行适用于 Windows 安装器的最新版 Python。

Python 安装器的“自定义”菜单可为您提供一系列选项，最后一项为“Add python.exe to Path”（添加 python.exe 到 Path 环境变量中），请将该选项更改为“Will be installed”（将会安装）。

Python 安装完成后，从 Windows 开始菜单中打开“命令提示符”窗口，并运行以下命令：

```
pip install --user pyserial
```

工具链设置 下载预编译的 Windows 工具链：

https://dl.espressif.com/dl/xtensa-esp32-elf-gcc8_4_0-esp-2021r2-patch3-win32.zip

将压缩包文件解压到 `C:\Program Files`` (或其他位置)。压缩包文件包含一个 ``xtensa-esp32-elf` 目录。

然后，请将该目录下的 `bin` 子目录添加到 *Path* 环境变量。例如，将目录 `C:\Program Files\xtensa-esp32-elf\bin` 添加到 Path 环境变量。

注解： 如果您已安装 MSYS2 环境（适用“GNU Make”编译系统），则可以跳过下载那一步，直接添加目录 `C:\msys32\opt\xtensa-esp32-elf\bin` 到 Path 环境变量，因为 MSYS2 环境已包含工具链。

添加目录到 Path 环境变量 在 Windows 环境下，向 Path 环境变量增加任何新目录，请：

打开系统“控制面板”，找到环境变量对话框（Windows 10 用户请前往“高级系统设置”）。

双击 `Path` 变量（选择“用户路径”或“系统路径”，具体取决于您是否希望其他用户的 Path 中也存在该目录)。最后在值的末尾增加 `;<new value>`。

后续步骤 请前往第三步：设置工具 章节继续设置开发环境。

从零开始设置 Linux 环境下的工具链

除了从乐鑫官网直接下载已编译好的二进制工具链外，您还可以按照本文介绍，从头开始设置自己的工具链。如需快速使用已编译好的二进制工具链，可回到*Linux 平台工具链的标准设置* 章节。

注解： 设置自己的工具链可以解决 Y2K38 问题（time_t 从 32 位扩展到 64 位)。

安装准备 编译 ESP-IDF 需要以下软件包：

- CentOS 7:

```
sudo yum -y update && sudo yum install git wget ncurses-devel flex bison gperf␣
↪python3 python3-pip cmake ninja-build ccache dfu-util libusbx
```

目前仍然支持 CentOS 7，但为了更好的用户体验，建议使用 CentOS 8。

- Ubuntu 和 Debian:

```
sudo apt-get install git wget libncurses-dev flex bison gperf python3 python3-␣
↪pip python3-setuptools python3-serial python3-cryptography python3-future␣
↪python3-pyparsing python3-pyelftools cmake ninja-build ccache libffi-dev␣
↪libssl-dev dfu-util libusb-1.0-0
```

- Arch:

```
sudo pacman -Sy --needed gcc git make ncurses flex bison gperf python-pyserial␣
↪python-cryptography python-future python-pyparsing python-pyelftools cmake␣
↪ninja ccache dfu-util libusb
```

注解： 使用 ESP-IDF 需要 CMake 3.5 或以上版本。较早的 Linux 发行版可能需要升级自身的软件源仓库，或开启 backports 套件库，或安装“cmake3”软件包（不是安装“cmake”）。

从源代码编译工具链 安装依赖项：

- CentOS 7:

```
sudo yum install gawk gperf grep gettext ncurses-devel python3 python3-devel␣
↪automake bison flex texinfo help2man libtool make
```

- Ubuntu pre-16.04:

```
sudo apt-get install gawk gperf grep gettext libncurses-dev python python-dev␣
↪automake bison flex texinfo help2man libtool make
```

- Ubuntu 16.04 或以上

```
sudo apt-get install gawk gperf grep gettext python python-dev automake bison␣
↪flex texinfo help2man libtool libtool-bin make
```

- Debian 9:

```
sudo apt-get install gawk gperf grep gettext libncurses-dev python python-dev␣
↪automake bison flex texinfo help2man libtool libtool-bin make
```

- Arch:

```
sudo pacman -Sy --needed python-pip
```

创建工作目录，并进入该目录:

```
mkdir -p ~/esp
cd ~/esp
```

下载并编译 `crosstool-NG`:

```
git clone https://github.com/espressif/crosstool-NG.git
cd crosstool-NG
git checkout esp-2021r2-patch3
git submodule update --init
./bootstrap && ./configure --enable-local && make
```

注解： 在设置支持 64 位 time_t 的工具链时，您需要将 `crosstool-NG/samples/xtensa-esp32-elf/crosstool.config` 文件中第 33 和 43 行的可选参数 `--enable-newlib-long-time_t` 删除。

编译工具链:

```
./ct-ng xtensa-esp32-elf
./ct-ng build
chmod -R u+w builds/xtensa-esp32-elf
```

编译得到的工具链会被保存至 `~/esp/crosstool-NG/builds/xtensa-esp32-elf`。

添加工具链到 PATH 环境变量 需要将自定义工具链复制到一个二进制目录中，并将其添加到 `PATH` 中。例如，您可以将编译好的工具链复制到 `~/esp/xtensa-esp32-elf/` 目录中。

为了正常使用工具链，您需要更新 `~/.profile` 文件中 `PATH` 环境变量。此外，您还可以在 `~/.profile` 文件中增加以下代码。这样，所有终端窗口均可以使用 `xtensa-esp32-elf`:

```
export PATH="$HOME/esp/xtensa-esp32-elf/bin:$PATH"
```

注解： 如果您已将 /bin/bash 设置为登录 shell，且同时存在 .bash_profile 和 .profile 两个文件，则请更新 .bash_profile。在 CentOS 环境下，alias 需要添加到 .bashrc 文件中。

退出并重新登录以使 .profile 的更改生效。运行以下命令来检查 PATH 设置是否正确:

```
printenv PATH
```

此时您需要检查输出结果的开头中是否包含类似如下的工具链路径:

```
$ printenv PATH
/home/user-name/esp/xtensa-esp32-elf/bin:/home/user-name/bin:/home/user-name/.
↪local/bin:/usr/local/sbin:/usr/local/bin:/usr/sbin:/usr/bin:/sbin:/bin:/usr/
↪games:/usr/local/games:/snap/bin
```

注意这里的 /home/user-name 应该替换成您安装的主路径。

停用 Python 2 Python 2 已经 结束生命周期，ESP-IDF 很快将不再支持 Python 2。请安装 Python 3.6 或以上版本。可参考上面列出的目前主流 Linux 发行版的安装说明。

后续步骤 请前往第二步：获取 *ESP-IDF* 章节继续设置开发环境。

从零开始设置 macOS 环境下的工具链

软件包管理器 从零开始设置工具链，您需要安装 MacPorts 或 Homebrew 软件包管理器。或者，您也可以直接下载预编译的工具链。

MacPorts 需要完整的 XCode 软件，而 Homebrew 只需要安装 XCode 命令行工具即可。

请参考工具链自定义设置 章节，查看可能需要从头开始设置工具链的情况。

安装准备

- 安装 pip:

```
sudo easy_install pip
```

- 安装 pyserial:

```
pip install --user pyserial
```

- 安装 CMake 和 Ninja 编译工具：
  - 若有 Homebrew，您可以运行:

```
brew install cmake ninja dfu-util
```

  - 若有 MacPorts，您可以运行:

```
sudo port install cmake ninja dfu-util
```

从源代码编译工具链 安装依赖项：

- 对于 MacPorts:

```
sudo port install gsed gawk binutils gperf grep gettext wget libtool autoconf␣
↪automake make
```

- 对于 Homebrew:

```
brew install gnu-sed gawk binutils gperftools gettext wget help2man libtool␣
↪autoconf automake make
```

创建一个文件系统镜像（区分大小写）：

```
hdiutil create ~/esp/crosstool.dmg -volname "ctng" -size 10g -fs "Case-sensitive␣
↪HFS+"
```

挂载:

```
hdiutil mount ~/esp/crosstool.dmg
```

创建指向您工作目录的符号链接:

```
mkdir -p ~/esp
ln -s /Volumes/ctng ~/esp/ctng-volume
```

前往新创建的目录:

```
cd ~/esp/ctng-volume
```

下载并编译 crosstool-NG:

```
git clone https://github.com/espressif/crosstool-NG.git
cd crosstool-NG
git checkout esp-2021r2-patch3
git submodule update --init
./bootstrap && ./configure --enable-local && make
```

编译工具链:

```
./ct-ng xtensa-esp32-elf
./ct-ng build
chmod -R u+w builds/xtensa-esp32-elf
```

编译得到的工具链会被保存到 ~/esp/ctng-volume/crosstool-NG/builds/xtensa-esp32-elf。使用工具链前，请将 ~/esp/ctng-volume/crosstool-NG/builds/xtensa-esp32-elf/bin 添加至 PATH 环境变量。

停用 Python 2 Python 2 已经 结束生命周期，ESP-IDF 很快将不再支持 Python 2。请安装 Python 3.6 或以上版本。可参考上面列出的 macOS 安装说明。

后续步骤 请前往第二步：获取 *ESP-IDF* 章节继续设置开发环境。

1.16.6 快速入门（传统 GNU Make）

注解： ESP-IDF V4.0 及之后版本的默认构建系统为 CMake。本文档主要针对之前基于 GNU Make 的传统构建系统。请注意，未来，我们可能不会继续支持基于 GNU Make 的构建系统。

本文档旨在指导用户搭建 ESP32 硬件开发的软件环境，通过一个简单的示例展示如何使用 ESP-IDF (Espressif IoT Development Framework) 配置菜单，并编译、下载固件至 ESP32 开发板等步骤。

注解： 这是 ESP-IDF 稳定版本 v4.3.6 的文档，还有其他版本的文档*ESP-IDF 版本简介* 供参考。

概述

ESP32 SoC 芯片支持以下功能：

- 2.4 GHz Wi-Fi
- 蓝牙
- 高性能双核
- 超低功耗协处理器
- 多种外设

ESP32 采用 40 nm 工艺制成，具有最佳的功耗性能、射频性能、稳定性、通用性和可靠性，适用于各种应用场景和不同功耗需求。

乐鑫为用户提供完整的软、硬件资源，进行 ESP32 硬件设备的开发。其中，乐鑫的软件开发环境 ESP-IDF 旨在协助用户快速开发物联网 (IoT) 应用，可满足用户对 Wi-Fi、蓝牙、低功耗等方面的要求。

准备工作

硬件：

- 一款 **ESP32** 开发板
- **USB 数据线** (A 转 Micro-B)
- PC（Windows、Linux 或 macOS）

软件：

- 设置 **工具链**，用于编译 ESP32 **应用程序**；
- 获取 **ESP-IDF** 软件开发框架。该框架已经基本包含 ESP32 使用的 API（软件库和源代码）和运行 **工具链**的脚本；
- 安装 C 语言编程（**工程**）的 **文本编辑器**，例如 Eclipse。

开发板简介

请点击下方连接，了解有关具体开发板的详细信息。

详细安装步骤

请根据下方详细步骤，完成安装过程。

设置开发环境

- *Windows*、*Linux* 和*macOS* 的第一步：设置工具链
- 第二步：获取 *ESP-IDF*
- 第三步：设置环境变量
- 第四步：安装 *Python* 软件包

创建您的第一个工程

- 第五步：开始创建工程
- 第六步：连接设备
- 第七步：配置
- 第八步：编译和烧录
- 第九步：监视器

第一步：设置工具链

工具链指一套用于编译代码和应用程序的程序。

为了加快开发进度，您可以直接使用乐鑫提供的预制工具链。请根据您的操作系点击对应的链接，并按照链接中的指导进行安装。

Windows 平台工具链的标准设置（传统 GNU Make）

注解： ESP-IDF V4.0 及之后版本的默认构建系统为 CMake。本文档主要针对之前基于 GNU Make 的传统构建系统。请注意，未来，我们可能不会继续支持基于 GNU Make 的构建系统。

概述 Windows 系统没有内置的 “make” 环境，所以除了安装工具链之外，您还需要一个兼容 GNU 的环境。这里，我们使用 MSYS2 环境兼容 GNU。您无需一直使用这个环境，比如您可以使用*Eclipse* 或其他前端，仅需在后台运行 MSYS2 即可。

工具链设置 最简便的工具链设置方法是从下方地址下载 Windows 多合一工具链和 MSYS2 压缩包文件：

https://dl.espressif.com/dl/esp32_win32_msys2_environment_and_esp2020r2_toolchain-20200601.zip

请将压缩包文件解压至 `C:\``（或其他目录，但本文档中以 ``C:\` 为例），该文件将为您创建一个带有预配置环境的 `msys32` 目录。

开始尝试 请运行 `C:\msys32\mingw32.exe` 文件，打开一个 MSYS2 MINGW32 终端窗口。该窗口的环境为 bash shell。请创建一个名为 `esp` 的文件夹，作为 ESP32 应用程序开发的默认目录。您可以使用以下命令创建文件夹：

```
mkdir -p ~/esp
```

您还可以通过 `cd ~/esp` 命令，进入刚刚创建的文件夹。如无其他问题，本步骤到此结束。

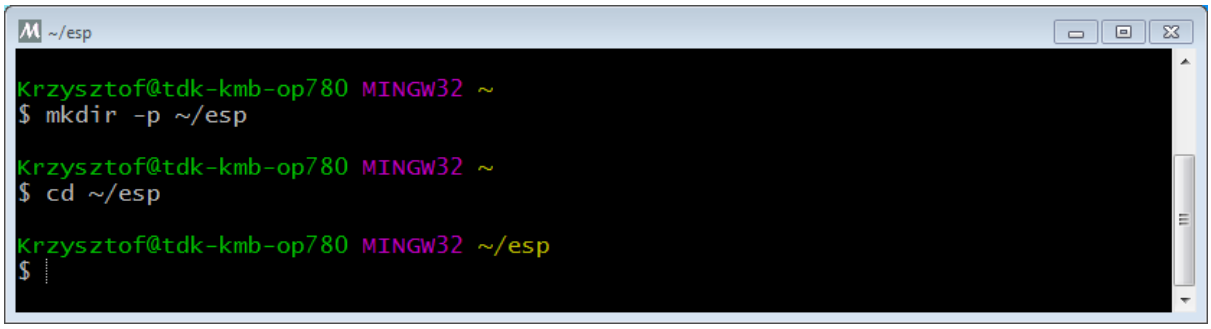

图 57: MSYS2 MINGW32 shell 窗口

请在后续步骤中，使用本窗口配置 ESP32 的开发环境。

后续步骤 继续设置开发环境，请前往*第二步：获取 ESP-IDF* 章节。

更新环境 当 IDF 有更新时，有时需要安装新的工具链或为 Windows MSYS2 环境添加新的要求。如需将旧版本预编译环境中的数据迁移至新版本，您可以：

1. 复制旧的 MSYS2 环境（即 `C:\msys32`），并将其移动/重命名到不同目录下（即 `C:\msys32_old`）。
2. 使用上述步骤，下载新的预编译环境。
3. 将新的 MSYS2 环境解压缩至 `C:\msys32` （或您指定的其他位置）。
4. 找到旧的 `C:\msys32_old\home` 文件夹，并将其移动至 `C:\msys32`。
5. 此时，如无其他需要，您可以删除旧的 `C:\msys32_old\home` 文件夹。

注意，您可以在电脑中安装多个不同的 MSYS2 环境，仅需将它们保存在不同的路径下即可。

此外，您还可以直接更新现有环境（无需下载新的版本），但步骤更加复杂。

相关文档

从零开始设置 Windows 环境下的工具链（传统 GNU Make）

注解： ESP-IDF V4.0 及之后版本的默认构建系统为 CMake。本文档主要针对之前基于 GNU Make 的传统构建系统。请注意，未来，我们可能不会继续支持基于 GNU Make 的构建系统。

手动安装所有工具能更好地控制整个安装流程，同时也方便高阶用户进行自定义安装。此外，经验不足的用户还可以参考预编译环境 中的步骤进行准备。

使用预编译环境对工具链进行快速标准设置，请参照*Windows 平台工具链的标准设置（传统 GNU Make）*。

从零开始配置工具链和环境 本流程包括：首先，安装 MSYS2；其次，安装 ESP-IDF 所需的 Python 工具包；最后，下载并安装 Xtensa 工具链。

- 请前往 MSYS2 安装器页面，并下载 `msys2-i686-xxxxxxx.exe` 安装器（我们仅支持 32-bit MSYS 环境，32 位和 64 位 Window 均可使用）。截止至本文最新更新之时，最新版安装器为 `msys2-i686-20161025.exe`。
- 完成所有安装步骤。**最后一步时，请不要勾选 “Run MSYS2 32-bit now”**。
- 安装完成后，请从 “开始” 菜单中找到 “MSYS2 MinGW 32-bit”，运行 “命令提示符” 窗口。
  - 为什么要特别打开这个终端窗口？MSYS2 会对不同环境进行区分。默认的 “MSYS” 环境与 Cygwin 相仿，会为 Windows 系统的 API 调用增加一个转换层。但为了使用支持 COM 端口的原生 Python，我们需要准备好 “MinGW” 环境。
- GitHub 上的 ESP-IDF 仓库的 *tools* 目录下可以找到名为 `windows_install_prerequisites.sh` 的脚本。如果您还没有本地 ESP-IDF 副本，也可以从以下地址进行下载（请下载 raw 格式）：tools/windows/windows_install_prerequisites.sh，并将其保存至您的电脑。
- 请在 MSYS2 终端窗口中指定该脚本的保存路径。注意，路径格式与 Window 路径相同，但需使用正斜杠 (/) 而不是反斜杠 (\)。例 `C:/Users/myuser/Downloads/windows_install_prerequisites.sh`。当然，您也可以直接打开查看该脚本的内容。
- `windows_install_prerequisites.sh` 脚本将帮您下载并安装支持 ESP-IDF 的软件包和 ESP32 工具链。

疑难解答

- MSYS 可能在脚本运行过程中进行自动升级，导致无法使用。此时，您会看到以下错误信息:

```
*** fatal error - cygheap base mismatch detected - 0x612E5408/0x612E4408
```

  这个问题很大可能是由于 cygwin DLL 版本不兼容。
  这种情况下，请完全关闭终端窗口（相当于终止所有进程），并重新打开一个窗口。然后，请在新窗口中重新运行 `windows_install_prerequisites.sh`（小技巧：您可以使用 “向上箭头” 找到之前运行的命令）。此时，更新流程将重启。
- 注意，MSYS2 是一个 “滚动” 发行版，因此安装脚本可能会为您安装比 “预编译环境” 中更新的软件包。因此，如果遇到与 MSYS2 安装包有关的错误，请前往 MSYS2-packages 问题列表 页面寻找答案。如果未找到所需答案，请 提交一个 IDF Issue。

中国地区的 MSYS2 镜像 中国地区有一些（非官方）的 MSYS2 镜像，这可以大幅提高中国地区的下载速度。

如需添加这些镜像，请在运行安装脚本前修改以下两个 MSYS2 镜像列表文件。镜像文件的保存路径为 `/etc/pacman.d`，比如 `c:\msys2\etc\pacman.d`。

请在 `mirrorlist.mingw32` 最上方增加如下语句:

```
Server = https://mirrors.ustc.edu.cn/msys2/mingw/i686/
Server = http://mirror.bit.edu.cn/msys2/REPOS/MINGW/i686
```

请在 mirrorlist.msys 最上方增加如下语句:

```
Server = http://mirrors.ustc.edu.cn/msys2/msys/$arch
Server = http://mirror.bit.edu.cn/msys2/REPOS/MSYS2/$arch
```

HTTP 代理 您可以在运行“设置脚本”之前，在终端中设置 http_proxy 变量，从而允许使用 HTTP 代理下载 MSYS 和 PIP:

```
export http_proxy='http://http.proxy.server:PORT'
```

或者修改证书:

```
export http_proxy='http://user:password@http.proxy.server:PORT'
```

如需始终用代理使用 MSYS，请在 MSYS 目录中增加 /etc/profile。

其他设置：下载工具链 如果您已经安装了 MSYS2，或者想要以不同的方式执行操作，您可以在此处下载工具链：

https://dl.espressif.com/dl/xtensa-esp32-elf-gcc8_4_0-esp-2021r2-patch3-win32.zip

---

注解： 如果您已完成了从零开始配置工具链和环境 中介绍的所有步骤，则已经拥有了工具链，这里无需重复下载。

重要： 仅拥有工具链 尚无法让您在 Windows 中使用 ESP-IDF。除此之外，您还至少需要安装 GNU make、bash 和 sed。上述环境已经包括这些配置，此外还有一个主机编译器（这样才能使用 menuconfig）。

后续步骤 继续设置开发环境，请前往第二步：获取 *ESP-IDF* 章节。

更新环境 当 IDF 有更新时，有时需要安装新的工具链或为 Windows MSYS2 环境添加新的系统要求。

此时，您无需重新配置环境，仅需更新现有 Windows 环境和工具链即可。

- 将 IDF 更新至您希望的版本。
- 请运行 IDF 仓库中的 tools/windows/windows_install_prerequisites.sh 脚本。该脚本将帮您安装所有新的软件包，并下载更新工具链至最新版本。

注意，该脚本在更新 MSYS2 时也会遇到疑难解答 中介绍的问题。

如需要同时支持多个 IDF 版本，您可以在不同的目录下配置独立的 MSYS2 环境。或者，您还可以下载多个工具链，并将其解压缩到不同的目录下，然后使用 PATH 环境变量指定默认工具链。

Linux 平台工具链的标准设置（传统 GNU Make）

注解： ESP-IDF V4.0 及之后版本的默认构建系统为 CMake。本文档主要针对之前基于 GNU Make 的传统构建系统。请注意，未来，我们可能不会继续支持基于 GNU Make 的构建系统。

安装准备 编译 ESP-IDF 需要以下软件包：

- CentOS 7:

```
sudo yum install gcc git wget make flex bison gperf python python2-cryptography
```

- Ubuntu and Debian:

```
sudo apt-get install gcc git wget make flex bison gperf python python-pip␣
↪python-setuptools python-serial python-cryptography python-future python-
↪pyparsing python-pyelftools libffi-dev libssl-dev
```

- Arch:

```
sudo pacman -S --needed gcc git make flex bison gperf python-pyserial python-
↪cryptography python-future python-pyparsing python-pyelftools
```

注解： 一些旧的（2014 年之前）Linux 发行版中使用的 `pyserial` 版本可能是 2.x，ESP-IDF 并不支持。这种情况下，请按照*第四步：安装 Python 软件包* 章节的介绍，使用 `pip` 安装软件包。

工具链设置 Linux 版的 ESP32 工具链可以从 Espressif 的网站下载：

- 64 位 Linux：
  https://dl.espressif.com/dl/xtensa-esp32-elf-gcc8_4_0-esp-2021r2-patch3-linux-amd64.tar.gz
- 32 位 Linux：
  https://dl.espressif.com/dl/xtensa-esp32-elf-gcc8_4_0-esp-2021r2-patch3-linux-i686.tar.gz

1. 下载压缩文件之后，解压到 `~/esp` 目录中：
   - 64 位 Linux：

```
mkdir -p ~/esp
cd ~/esp
tar -xzf ~/Downloads/xtensa-esp32-elf-gcc8_4_0-esp-2021r2-patch3-linux-
↪amd64.tar.gz
```

   - 32 位 Linux：

```
mkdir -p ~/esp
cd ~/esp
tar -xzf ~/Downloads/xtensa-esp32-elf-gcc8_4_0-esp-2021r2-patch3-linux-
↪i686.tar.gz
```

2. 工具链将被解压到 `~/esp/xtensa-esp32-elf/` 路径下。
   为了正常使用工具链，您必须更新 `~/.profile` 文件中的 `PATH` 环境变量。此外，您还可以在 `~/.profile` 文件中增加以下代码，这样一来，所有终端窗口均可以使用 `xtensa-esp32-elf`:

```
export PATH="$HOME/esp/xtensa-esp32-elf/bin:$PATH"
```

   或者，您可以为上述命令创建一个别名。这样，您只有在需要时才可以使用工具链。如需设置别名，请将以下代码增加至您的 F/ `.profile` 文件中:

```
alias get_esp32='export PATH="$HOME/esp/xtensa-esp32-elf/bin:$PATH"'
```

   这样，您可以在终端输入 `get_esp32` 命令将工具链添加至您的 `PATH`，从而使用工具链。

   注解： 如果您已将 `/bin/bash` 设置为登录 shell，且同时存在 `.bash_profile` 和 `.profile`，则请更新 `.bash_profile` 。在 CentOS 环境下，`alias` 需要添加到 `.bashrc` 文件中。

   ---

3. 退出并重新登录以使 `.profile` 更改生效。运行以下命令来检查 `PATH` 设置是否正确

```
printenv PATH
```

   检查字符串的开头是否包含类似的工具链路径:

```
$ printenv PATH
/home/user-name/esp/xtensa-esp32-elf/bin:/home/user-name/bin:/home/user-name/.
↪local/bin:/usr/local/sbin:/usr/local/bin:/usr/sbin:/usr/bin:/sbin:/bin:/usr/
↪games:/usr/local/games:/snap/bin
```

这里，您需要将 `/home/user-name` 替换为您的安装主目录。

权限问题 /dev/ttyUSB0 某些 Linux 版本可能在烧写 ESP32 时会出现 `Failed to open port /dev/ttyUSB0` 错误消息，这可以通过将当前用户添加到 *dialout* 组来解决。

后续步骤 继续设置开发环境，请前往第二步：获取 *ESP-IDF* 章节。

相关文档

从零开始设置 Linux 环境下的工具链（传统 GNU Make）

注解： ESP-IDF V4.0 及之后版本的默认构建系统为 CMake。本文档主要针对之前基于 GNU Make 的传统构建系统。请注意，未来，我们可能不会继续支持基于 GNU Make 的构建系统。

注解： 安装工具链的标准方法请见这里。请参考工具链自定义设置 章节，查看可能需要从头开始设置工具链的情况。

安装准备 编译 ESP-IDF 需要以下软件包：

- Ubuntu and Debian:

```
sudo apt-get install gcc git wget make libncurses-dev flex bison gperf python␣
↪python-pip python-setuptools python-serial python-cryptography python-future␣
↪python-pyparsing python-pyelftools libffi-dev libssl-dev
```

- Arch:

```
sudo pacman -S --needed gcc git make ncurses flex bison gperf python-pyserial␣
↪python-cryptography python-future python-pyparsing python-pyelftools
```

注解： 一些旧的（2014 年之前）Linux 发行版中使用的 `pyserial` 版本可能是 2.x，ESP-IDF 并不支持。这种情况下，请按照第四步：安装 *Python* 软件包 章节的介绍，使用 `pip` 安装软件包。

从源代码编译工具链

- 安装依赖项：
  - CentOS 7:

```
sudo yum install gawk gperf grep gettext ncurses-devel python python-devel␣
↪automake bison flex texinfo help2man libtool
```

  - Ubuntu pre-16.04:

```
sudo apt-get install gawk gperf grep gettext libncurses-dev python python-
↪dev automake bison flex texinfo help2man libtool
```

  - Ubuntu 16.04 或以上

```
sudo apt-get install gawk gperf grep gettext python python-dev automake␣
↪bison flex texinfo help2man libtool libtool-bin
```

– Debian 9:

```
sudo apt-get install gawk gperf grep gettext libncurses-dev python python-
↪dev automake bison flex texinfo help2man libtool libtool-bin
```

– Arch:

```
TODO
```

- 创建工作目录，并进入该目录:

```
mkdir -p ~/esp
cd ~/esp
```

- 下载并编译 crosstool-NG：

```
git clone https://github.com/espressif/crosstool-NG.git
cd crosstool-NG
git checkout esp-2021r2-patch3
git submodule update --init
./bootstrap && ./configure --enable-local && make
```

- 编译工具链:

```
./ct-ng xtensa-esp32-elf
./ct-ng build
chmod -R u+w builds/xtensa-esp32-elf
```

编译得到的工具链会被保存到 ~/esp/crosstool-NG/builds/xtensa-esp32-elf。请按照标准设置指南 的介绍，将工具链添加到 PATH。

后续步骤 继续设置开发环境，请前往第二步：获取 *ESP-IDF* 章节。

Mac OS 平台工具链的标准设置(传统 GNU Make)

注解: ESP-IDF V4.0 及之后版本的默认构建系统为 CMake。本文档主要针对之前基于 GNU Make 的传统构建系统。请注意，未来，我们可能不会继续支持基于 GNU Make 的构建系统。

安装准备

- 安装 pip:

```
sudo easy_install pip
```

注解: pip 稍后将用于安装所需 *Python* 包。

工具链设置 Mac OS 版本的 ESP32 工具链可以从以下地址下载：

https://dl.espressif.com/dl/xtensa-esp32-elf-gcc8_4_0-esp-2021r2-patch3-macos.tar.gz

下载压缩文件之后，解压到 ~/esp 目录中:

```
mkdir -p ~/esp
cd ~/esp
tar -xzf ~/Downloads/xtensa-esp32-elf-gcc8_4_0-esp-2021r2-patch3-macos.tar.gz
```

工具链将被解压到 ~/esp/xtensa-esp32-elf/ 路径下。

为了正常使用工具链，您必须更新 ~/.profile 文件中的 PATH 环境变量。此外，您还可以在 ~/.profile 文件中增加以下代码，这样一来，所有终端窗口均可以使用 xtensa-esp32-elf:

```
export PATH=$HOME/esp/xtensa-esp32-elf/bin:$PATH
```

或者，您可以为上述命令创建一个别名。这样，您只有在需要时才可以使用工具链。如需设置别名，请将以下代码增加至您的 F/ .profile 文件中:

```
alias get_esp32="export PATH=$HOME/esp/xtensa-esp32-elf/bin:$PATH"
```

这样，您可以在终端输入 get_esp32 命令将工具链添加至您的 PATH，从而使用工具链。

后续步骤 继续设置开发环境，请前往*第二步：获取 ESP-IDF* 章节。

相关文档

从零开始设置 Mac OS 环境下的工具链（传统 GNU Make）

注解： ESP-IDF V4.0 及之后版本的默认构建系统为 CMake。本文档主要针对之前基于 GNU Make 的传统构建系统。请注意，未来，我们可能不会继续支持基于 GNU Make 的构建系统。

注解： 安装工具链的标准方法请见这里。请参考*工具链自定义设置* 章节，查看可能需要从头开始设置工具链的情况。

安装准备

- 安装 pip:

```
sudo easy_install pip
```

注解： pip 稍后将用于安装*必要的 Python 软件包*。

从源代码编译工具链

- 安装依赖项：
  - 安装 MacPorts 或 homebrew 安装包管理器。MacPorts 需要完整的 XCode 软件，而 homebrew 只需要安装 XCode 命令行工具即可。
  - 对于 MacPorts:

```
sudo port install gsed gawk binutils gperf grep gettext wget␣
↪libtool autoconf automake
```

  - 对于 homebrew:

```
brew install gnu-sed gawk binutils gperftools gettext wget␣
↪help2man libtool autoconf automake
```

- 创建一个文件系统镜像（区分大小写）：

```
hdiutil create ~/esp/crosstool.dmg -volname "ctng" -size 10g -fs "Case-
↪sensitive HFS+"
```

- 挂载:

```
hdiutil mount ~/esp/crosstool.dmg
```

- 创建指向您工作目录的符号链接:

```
mkdir -p ~/esp
ln -s /Volumes/ctng ~/esp/ctng-volume
```

- 前往新创建的目录

```
cd ~/esp/ctng-volume
```

- 下载并编译 crosstool-NG：

```
git clone https://github.com/espressif/crosstool-NG.git
cd crosstool-NG
git checkout esp-2021r2-patch3
git submodule update --init
./bootstrap && ./configure --enable-local && make
```

- 编译工具链:

```
./ct-ng xtensa-esp32-elf
./ct-ng build
chmod -R u+w builds/xtensa-esp32-elf
```

编译得到的工具链会被保存到 ~/esp/ctng-volume/crosstool-NG/builds/xtensa-esp32-elf。请按照标准设置指南 的介绍，将工具链添加到 PATH。

后续步骤 继续设置开发环境，请前往第二步：获取 *ESP-IDF* 章节。

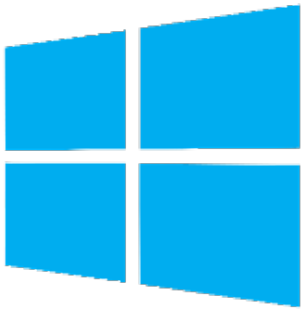

Windows

Linux

macOS

注解： 在本文档中，Linux 和 macOS 操作系统中 ESP-IDF 的默认安装路径为 ~/esp；Windows 操作系统的默认路径为 %userprofile%\esp。您也可以将 ESP-IDF 安装在任何其他路径下，但请注意在使用命令行时进行相应替换。注意，ESP-IDF 不支持带有空格的路径。

此外，您也可以根据自身经验和实际需求，对环境进行个性化设置，而非使用预制工具链。此时，请前往工具链自定义设置（传统 *GNU Make* 系统） 章节获取更多信息。

第二步：获取 ESP-IDF

除了工具链，您还需要供 ESP32 使用的 API（软件库和源代码），具体请见 ESP-IDF 仓库。

获取本地副本：打开终端，切换到你要存放 ESP-IDF 的工作目录，使用 git clone 命令克隆远程仓库。

打开终端，后运行以下命令：

```
mkdir -p ~/esp
cd ~/esp
git clone -b v4.3.6 --recursive https://github.com/espressif/esp-idf.git
```

ESP-IDF 将下载至 ~/esp/esp-idf。

请前往*ESP-IDF 版本简介*，查看 ESP-IDF 不同版本的具体适用场景。

注解： git clone 命令的 -b v4.3.6 选项告诉 git 从 ESP-IDF 仓库中克隆与此版本的文档对应的分支。

注解： 作为备份，还可以从 Releases page 下载此稳定版本的 zip 文件。不要下载由 GitHub 自动生成的"源代码"的 zip 文件，它们不适用于 ESP-IDF。

注解： 在克隆远程仓库时，不要忘记加上 --recursive 选项。否则，请接着运行以下命令，获取所有子模块:

```
cd esp-idf
git submodule update --init
```

第三步：设置环境变量

工具链通过环境变量 IDF_PATH 获得 ESP-IDF 的目录。因此，您需要在 PC 中设置该环境变量，否则无法编译工程。

您可以在每次重启会话时手动设置，也可以在用户配置中进行永久设置，具体请前往*在用户配置文件中添加 IDF_PATH（传统 GNU Make）* 章节，查看*Windows* 、*Linux 及 MacOS* 操作系统的具体设置方式。

第四步：安装 Python 软件包

ESP-IDF 所需的 Python 软件包位于 IDF_PATH/requirements.txt 中。您可以运行以下命令进行安装:

```
python -m pip install --user -r $IDF_PATH/requirements.txt
```

注解： 请注意查询您所使用的 Python 解释器的版本（运行命令 python --version），并根据查询结果将上方命令中的 python 替换为 python3, python3.7，例如:

```
python3 -m pip install --user -r $IDF_PATH/requirements.txt
```

第五步：开始创建工程

现在，您可以开始准备开发 ESP32 应用程序了。您可以从 ESP-IDF 中 examples 目录下的 get-started/hello_world 工程开始。

将 get-started/hello_world 复制至您本地的 ~/esp 目录下:

Linux 和 macOS 操作系统

```
cd ~/esp
cp -r $IDF_PATH/examples/get-started/hello_world .
```

Windows 操作系统

```
cd %userprofile%\esp
xcopy /e /i %IDF_PATH%\examples\get-started\hello_world hello_world
```

ESP-IDF 的 examples 目录下有一系列示例工程，都可以按照上面的方法进行创建。您可以按照上述方法复制并运行其中的任何示例，也可以直接编译示例，无需进行复制。

重要： ESP-IDF 编译系统不支持带有空格的路径。

第六步：连接设备

现在，请将您的 ESP32 开发板连接到 PC，并查看开发板使用的串口。

通常，串口在不同操作系统下显示的名称有所不同：

- **Windows 操作系统：** `COM1` 等
- **Linux 操作系统：** 以 `/dev/tty` 开始
- **macOS 操作系统：** 以 `/dev/cu.` 开始

有关如何查看串口名称的详细信息，请见*与 ESP32 创建串口连接（传统 GNU Make 系统）*。

注解： 请记住串口名，您会在下面的步骤中用到。

第七步：配置

请进入*第五步：开始创建工程* 中提到的 `hello_world` 目录，并运行工程配置工具 `menuconfig`。

Linux 和 macOS 操作系统

```
cd ~/esp/hello_world
make menuconfig
```

Windows 操作系统

```
cd %userprofile%\esp\hello_world
make menuconfig
```

如果之前的步骤都正确，则会显示下面的菜单：

进入菜单后，选择 `Serial flasher config` > `Default serial port` 配置串口（设备将通过该串口加载工程）。按回车键确认选择，点击 `< Save >` 保存配置，然后点击 `< Exit >` 退出 `menuconfig`。

`menuconfig` 工具的常见操作见下。

- 上下箭头：移动
- 回车：进入子菜单
- `ESC` 键：返回上级菜单或退出
- 英文问号：调出帮助菜单（退出帮助菜单，请按回车键）。
- 空格 ``或 ``Y` 键：选择 `[*]` 配置选项；`N` 键：禁用 `[*]` 配置选项
- 英文问号（查询配置选项）：调出有关该选项的帮助菜单
- `/` 键：寻找配置工程

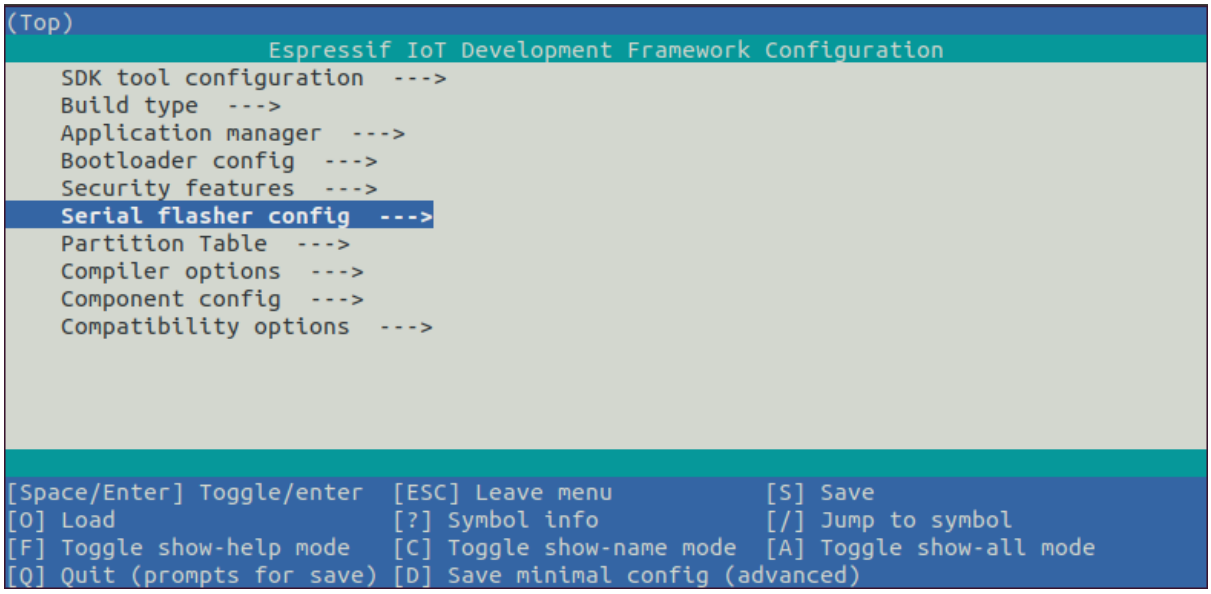

图 58: 工程配置—主窗口

注意: 如果您使用的是 ESP32-DevKitC（板载 ESP32-SOLO-1 模组），请在烧写示例程序前，前往 `menuconfig` 中使能单核模式（*CONFIG_FREERTOS_UNICORE*）。

第八步：编译和烧录

请使用以下命令，编译烧录工程:

```
make flash
```

运行以上命令可以编译应用程序和所有 ESP-IDF 组件，接着生成 bootloader、分区表和应用程序二进制文件。接着，这些二进制文件将被烧录至 ESP32 开发板。

烧录过程中可能遇到的问题 如果在运行给定命令时出现如“连接失败”这样的错误，原因之一则可能是运行 `esptool.py` 出现错误。`esptool.py` 是构建系统调用的程序，用于重置芯片、与 ROM 引导加载器交互以及烧录固件的工具。解决该问题的一个简单的方法就是按照以下步骤进行手动复位。如果问题仍未解决，请参考 Troubleshooting 获取更多信息。

`esptool.py` 通过使 USB 转串口转接器芯片（如 FTDI 或 CP210x）的 DTR 和 RTS 控制线生效来自动复位 ESP32（请参考*与 ESP32 创建串口连接（传统 GNU Make 系统）* 获取更多详细信息）。DTR 和 RTS 控制线又连接到 ESP32 的 `GPIO0` 和 `CHIP_PU` (EN) 管脚上，因此 DTR 和 RTS 的电压电平变化会使 ESP32 进入固件下载模式。相关示例可查看 ESP32 DevKitC 开发板的 原理图。

一般来说，使用官方的 esp-idf 开发板不会出现问题。但是，`esptool.py` 在以下情况下不能自动重置硬件。

- 您的硬件没有连接到 `GPIO0` 和 `CIHP_PU` 的 DTR 和 RTS 控制线
- DTR 和 RTS 控制线的配置方式不同
- 根本没有这样的串行控制线路

根据您硬件的种类，也可以将您 ESP32 开发板手动设置成固件下载模式（复位）。

- 对于 Espressif 的开发板，您可以参考对应开发板的入门指南或用户指南。例如，可以通过按住 **Boot** 按钮 (`GPIO0`) 再按住 **EN** 按钮 (`CHIP_PU`) 来手动复位 esp-idf 开发板。
- 对于其他类型的硬件，可以尝试将 `GPIO0` 拉低。

常规操作 如果一切顺利，您可在烧录完成后看到类似下方的打印信息。接着，开发板将会复位，应用程序“hello_world”开始启动。

```
esptool.py v3.0-dev
Flashing binaries to serial port /dev/ttyUSB0 (app at offset 0x10000)...
esptool.py v3.0-dev
Serial port /dev/cu.SLAB_USBtoUART
Connecting........____
Chip is ESP32D0WDQ6 (revision 1)
Features: WiFi, BT, Dual Core, Coding Scheme None
Crystal is 40MHz
MAC: 30:ae:a4:15:21:b4
Uploading stub...
Running stub...
Stub running...
Configuring flash size...
Auto-detected Flash size: 4MB
Flash params set to 0x0220
Compressed 26704 bytes to 15930...
Wrote 26704 bytes (15930 compressed) at 0x00001000 in 1.4 seconds (effective 151.9␣
↪kbit/s)...
Hash of data verified.
Compressed 147984 bytes to 77738...
Wrote 147984 bytes (77738 compressed) at 0x00010000 in 6.9 seconds (effective 172.
↪7 kbit/s)...
Hash of data verified.
Compressed 3072 bytes to 103...
Wrote 3072 bytes (103 compressed) at 0x00008000 in 0.0 seconds (effective 1607.9␣
↪kbit/s)...
Hash of data verified.

Leaving...
Hard resetting via RTS pin...
```

如果您希望使用 Eclipse IDE，而非 `make` 编译系统，请参考*Eclipse guide*。

第九步：监视器

您可以使用 `make monitor` 命令，监视“hello_world”的运行情况。

运行该命令后，*IDF 监视器* 应用程序将启动:

```
$ make monitor
MONITOR
--- idf_monitor on /dev/ttyUSB0 115200 ---
--- Quit: Ctrl+] | Menu: Ctrl+T | Help: Ctrl+T followed by Ctrl+H ---
ets Jun  8 2016 00:22:57

rst:0x1 (POWERON_RESET),boot:0x13 (SPI_FAST_FLASH_BOOT)
ets Jun  8 2016 00:22:57
...
```

此时，您就可以在启动日志和诊断日志之后，看到打印的“Hello world!”了。

```
...
Hello world!
This is esp32 chip with 2 CPU cores, WiFi/BT/BLE, silicon revision 1, 4MB external␣
↪flash
Restarting in 10 seconds...
Restarting in 9 seconds...
Restarting in 8 seconds...
Restarting in 7 seconds...
```

您可使用快捷键 Ctrl+]，退出 IDF 监视器。

如果 IDF 监视器在烧录后很快发生错误，或打印信息全是乱码（见下），很有可能是因为您的开发板采用了 26 MHz 晶振，而 ESP-IDF 默认支持大多数开发板使用的 40 MHz 晶振。

```
e???)(Xn@?y.!??(?PW+)??Hn9a￣/9?!?t5??P?~?k??e?ea?5?jA
~zY??Y(1?,1 ?? e???)(Xn@?y.!Dr?zY(? jpi?|?+z5Ymvp
```

此时，请您：

1. 退出监视器。
2. 打开*menuconfig*，
3. 进入 Component config -> ESP32-specific -> Main XTAL frequency 进行配置，将*CONFIG_ESP32_XTAL_FREQ_SEL* 设置为 26 MHz。
4. 然后，请重新编译和烧录 应用程序。

注解： 您也可以运行以下命令，一次性执行构建、烧录和监视过程：

```
make flash monitor
```

此外，请前往*IDF 监视器*，了解更多使用 IDF 监视器的快捷键和其他详情。

恭喜，您已完成 ESP32 的入门学习！

现在，您可以尝试一些其他 examples，或者直接开发自己的应用程序。

环境变量

用户可以在使用 make 命令时 **直接设置**部分环境变量，而无需进入 make menuconfig 进行重新配置。这些变量包括：

变量	描述与使用方式
ESPPORT	覆盖 flash 和 monitor 命令使用的串口。例：make flash ESPPORT=/dev/ttyUSB1, make monitor ESPPORT=COM1
ESPBAUD	覆盖烧录 ESP32 时使用的串口速率。例：make flash ESPBAUD=9600
MONITORBAUD	覆盖监控时使用的串口速率。例：make monitor MONITORBAUD=9600

注解： 您可导出环境变量（例：export ESPPORT=/dev/ttyUSB1）。在同一会话窗口中，如果未被同步覆盖，所有 make 命令均会使用导出的环境变量值。

更新 ESP-IDF

乐鑫会不时推出更新版本的 ESP-IDF，修复 bug 或推出新的特性。因此，您在使用时，也应注意更新您本地的版本。最简单的方法是：直接删除您本地的 esp-idf 文件夹，然后按照第二步：获取 *ESP-IDF* 中的指示，重新完成克隆。

如果您希望将 ESP-IDF 克隆到新的路径下，请务必重新设置 *IDF_PATH*。否则，工具链将无法找到 ESP-IDF。

此外，您可以仅更新变更部分。具体方式，请前往更新 章节查看。

相关文档

在用户配置文件中添加 IDF_PATH（传统 GNU Make）

注解： ESP-IDF V4.0 及之后版本的默认构建系统为 CMake。本文档主要针对之前基于 GNU Make 的传统构建系统。请注意，未来，我们可能不会继续支持基于 GNU Make 的构建系统。

为了在系统多次启动时，保留 IDF_PATH 环境变量的设置，请按照以下说明将该变量的设置增加至用户配置文件。

Windows 操作系统 用户配置文件脚本保存在 C:/msys32/etc/profile.d/ 路径下，每次打开 MSYS2 窗口时均会执行。

1. 在 C:/msys32/etc/profile.d/ 目录下创建一个新的脚本文件，并将其命名为 export_idf_path.sh。
2. 指定您的 ESP-IDF 保存路径，这通常与您的系统配置有关，比如 C:\msys32\home\user-name\esp\esp-idf。
3. 在脚本文件中加入下方 export 命令行，例:

   ```
   export IDF_PATH="C:/msys32/home/user-name/esp/esp-idf"
   ```

   注意请将反斜杠替换为 Windows 操作系统路径要求的正斜杠。
4. 保存脚本文件。
5. 关闭 MSYS2 窗口，并重新打开。运行以下命令，检查 IDF_PATH 是否成功设置:

   ```
   printenv IDF_PATH
   ```

   如果设置成功，则此时将打印之前在脚本中输入的路径。
   如果您不希望永久设置 IDF_PATH 变量，也可以在每次打开 MSYS2 窗口时进行手动设置:

   ```
   export IDF_PATH="C:/msys32/home/user-name/esp/esp-idf"
   ```

如果您是在安装 ESP32 软件的过程中从第三步：设置环境变量 章节跳转至此，请返回第五步：开始创建工程 章节。

Linux 和 MacOS 操作系统 在 ~/.profile 文件中增加以下命令，设置 IDF_PATH 变量:

```
export IDF_PATH=~/esp/esp-idf
```

退出并重新登陆，检查设置是否生效。

注解： 如果您已将 /bin/bash 设置为登录 shell，且同时存在 .bash_profile 和 .profile，则请更新 .bash_profile 。

运行以下命令，检查 IDF_PATH 是否成功设置:

```
printenv IDF_PATH
```

如果设置成功，则此时将打印之前在 ~/.profile 文件中输入（或手动设置）的路径。

如果您不希望永久设置 IDF_PATH 变量，也可以在每次重新打开终端窗口时进行手动设置:

```
export IDF_PATH=~/esp/esp-idf
```

如果您是在安装 ESP32 软件的过程中从第三步：设置环境变量 章节跳转至此，请返回第五步：开始创建工程 章节。

与 ESP32 创建串口连接（传统 GNU Make 系统）

注解： ESP-IDF V4.0 及之后版本的默认构建系统为 CMake。本文档主要针对之前基于 GNU Make 的传统构建系统。请注意，未来，我们可能不会继续支持基于 GNU Make 的构建系统。

本章节主要介绍如何创建 ESP32 和 PC 之间的串口连接。

连接 ESP32 和 PC 用 USB 线将 ESP32 开发板连接到 PC。如果设备驱动程序没有自动安装，请先确认 ESP32 开发板上的 USB 转串口芯片（或外部转串口适配器）型号，然后在网上搜索驱动程序，并进行手动安装。

以下是乐鑫 ESP32 等开发板驱动程序的链接：

开发板	USB 驱动	备注
ESP32-DevKitC	CP210x	
ESP32-LyraT	CP210x	
ESP32-LyraTD-MSC	CP210x	
ESP32-PICO-KIT	CP210x	
ESP-WROVER-KIT	FTDI	
ESP32 Demo 板	FTDI	
ESP-Prog	FTDI	编程板 (w/o ESP32)
ESP32-MeshKit-Sense	n/a	搭配 ESP-Prog 使用
ESP32-Sense Kit	n/a	搭配 ESP-Prog 使用

- CP210x: CP210x USB to UART Bridge VCP Drivers
- FTDI: FTDI Virtual COM Port Drivers

以上驱动仅用作参考。正常情况下，当上述任一 ESP32 开发板与 PC 连接时，打包在操作系统中的驱动程序将会开始自动安装。

查看端口（Windows 用户） 检查 Windows 设备管理器中的 COM 端口列表。断开 ESP32 与 PC 的连接，然后重连。查看从列表中消失后再次出现的是哪个端口。

以下为 ESP32 DevKitC 和 ESP32 WROVER KIT 串口：

查看端口（Linux 和 MacOS 用户） 查看 ESP32 开发板（或外部转串口适配器）的串口设备名称，请运行两次下述命令。首先，断开开发板或适配器，第一次运行命令；然后，连接开发板或适配器，第二次运行命令。其中，第二次运行命令后出现的端口即是 ESP32 对应的串口：

Linux

```
ls /dev/tty*
```

MacOS

```
ls /dev/cu.*
```

将用户增加至 Linux 的 `dialout` 组 当前登录用户应当拥有通过 USB 对串口进行读写的权限。在多数 Linux 版本中，您都可以通过以下命令，将用户添加到 `dialout` 组，来获取读写权限：

```
sudo usermod -a -G dialout $USER
```

在 Arch Linux 中，需要通过以下命令将用户添加到 `uucp` 组中：

```
sudo usermod -a -G uucp $USER
```

请重新登录，确保串口读写权限可以生效。

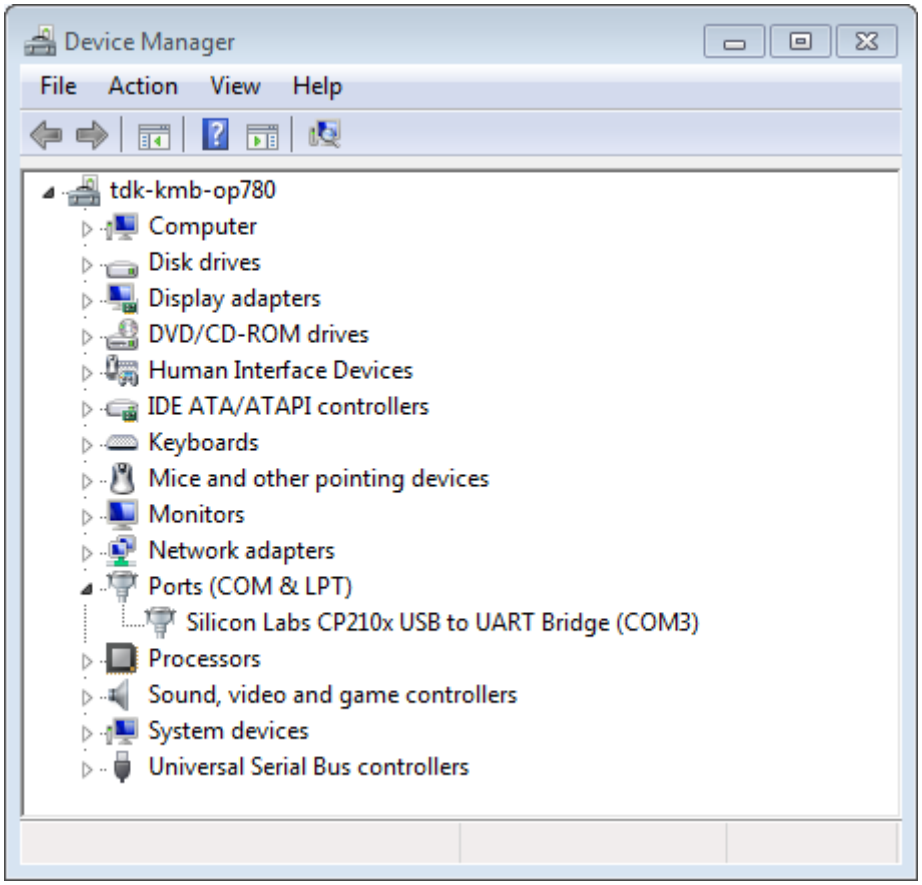

图 59: Windows 设备管理器中 ESP32-DevKitC 的 USB 至 UART 桥

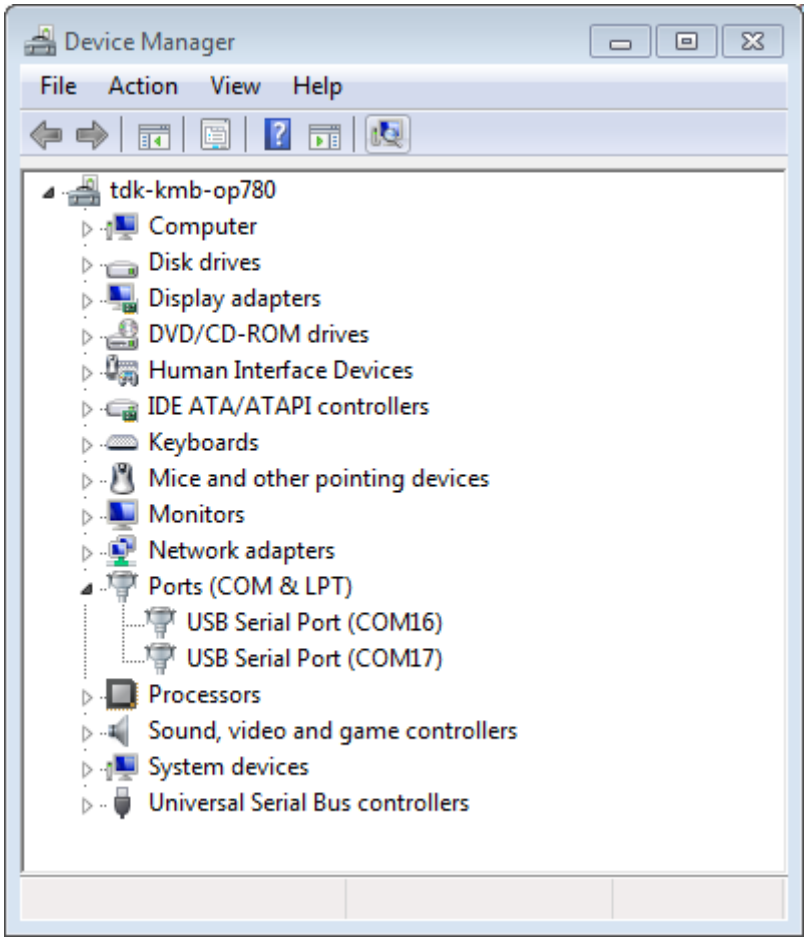

图 60: Windows 设备管理器中 ESP-WROVER-KIT 的两个 USB 串行端口

确认串口连接 现在，请使用串口终端程序，验证串口连接是否可用。在本示例中，我们将使用 PuTTY SSH Client 进行验证。该工具同时适用于 Windows 和 Linux 操作系统。您也可以使用其他串口程序，设置通信参数如下。

运行终端，配置串口：波特率 = 115200，数据位 = 8，停止位 = 1，奇偶校验 = N。在 Windows 和 Linux 中配置串口和通信参数（如 115200-8-1-N）的截图如下。注意，这里一定要选择在上述步骤中确认的串口进行配置。

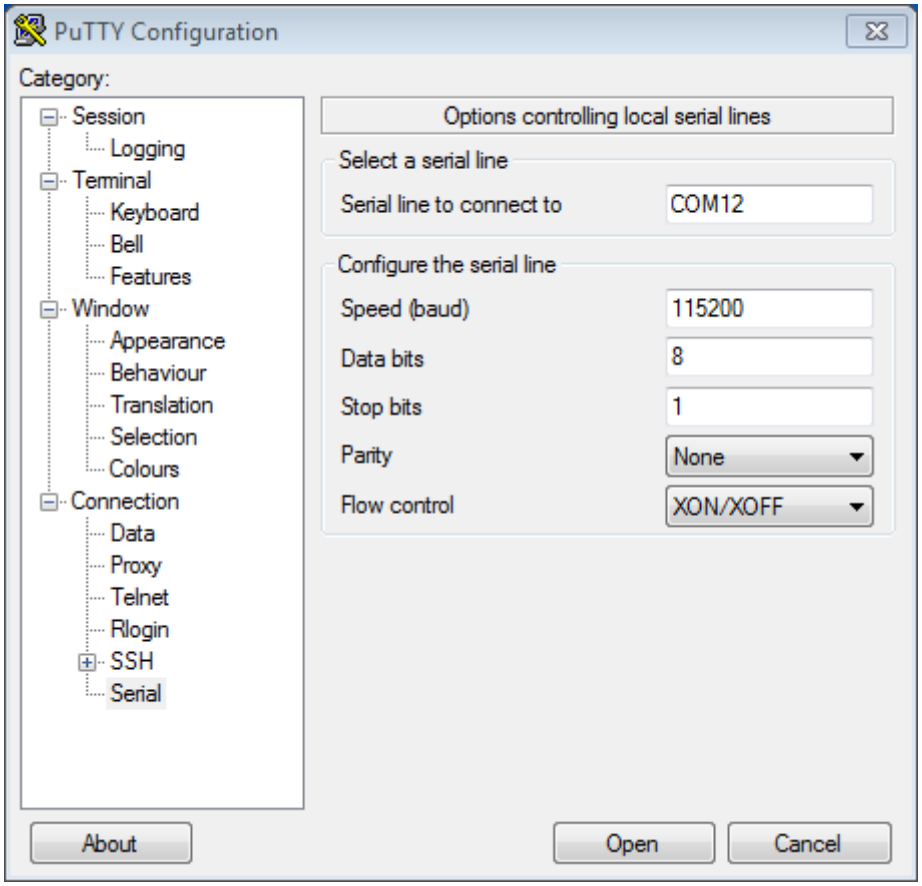

图 61: 在 Windows 操作系统中使用 PuTTY 设置串口通信参数

然后，请在终端打开串口，查看 ESP32 是否有任何打印，具体打印内容取决于加载至 ESP32 的程序。

ESP32 打印示例

```
ets Jun  8 2016 00:22:57

rst:0x5 (DEEPSLEEP_RESET),boot:0x13 (SPI_FAST_FLASH_BOOT)
ets Jun  8 2016 00:22:57

rst:0x7 (TG0WDT_SYS_RESET),boot:0x13 (SPI_FAST_FLASH_BOOT)
configsip: 0, SPIWP:0x00
clk_drv:0x00,q_drv:0x00,d_drv:0x00,cs0_drv:0x00,hd_drv:0x00,wp_drv:0x00
mode:DIO, clock div:2
load:0x3fff0008,len:8
load:0x3fff0010,len:3464
load:0x40078000,len:7828
load:0x40080000,len:252
entry 0x40080034
I (44) boot: ESP-IDF v2.0-rc1-401-gf9fba35 2nd stage bootloader
I (45) boot: compile time 18:48:10

...
```

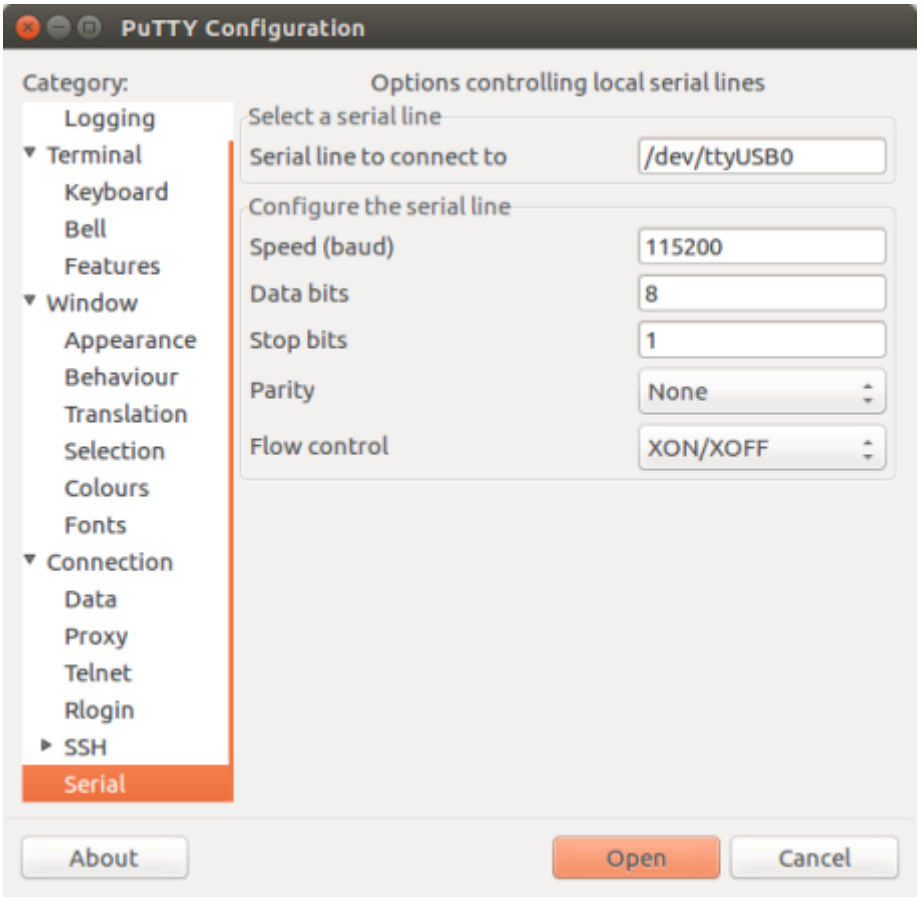

图 62: 在 Linux 操作系统中使用 PuTTY 设置串口通信参数

如果打印出的日志是可读的（而不是乱码），则表示串口连接正常。此时，您可以继续进行安装，并最终将应用程序下载到 ESP32。

注解： 在某些串口接线方式下，在 ESP32 启动并开始打印串口日志前，需要在终端程序中禁用串口 RTS & DTR 引脚。该问题仅存在于将 RTS & DTR 引脚直接连接到 EN & GPIO0 引脚上的情况，绝大多数开发板（包括乐鑫所有的开发板）都没有这个问题。更多详细信息，参见 esptool 文档。

注解： 验证完成后，请关闭串口终端。我们将在后续步骤中向 ESP32 下载新的应用程序，如果未关闭终端，则该应用程序将无法访问串口。

如果您是在安装 ESP32 软件的过程中从第六步：连接设备 章节跳转至此，请返回第七步：配置 章节。

通过 make 指令创建和烧录项目（传统 GNU Make）

注解： ESP-IDF V4.0 及之后版本的默认构建系统为 CMake。本文档主要针对之前基于 GNU Make 的传统构建系统。请注意，未来，我们可能不会继续支持基于 GNU Make 的构建系统。

寻找项目 除了 esp-idf-template 项目模版外，ESP-IDF 还在 GitHub 仓库中的 examples 目录下提供多个示例项目。

请找到并进入您想要的项目，开始配置、构建该项目。

配置项目

```
make menuconfig
```

编译项目

```
make all
```

该命令将配置 app 和 bootloader，并根据配置生成分区表。

烧录项目 `make all` 完成后将打印一行命令，提示您如何使用 esptool.py 烧录芯片。不过，您可以使用以下命令进行烧录:

```
make flash
```

该命令可以将整个项目（包括 app、bootloader 和分区表）烧录至新芯片。此外，如果分区表中存在 ota_data，则该命令还会同时将初始 ota_data 烧录至芯片。该命令允许您直接从 factory 分区中运行新加载的 app（如果 factory 分区不存在，则从第一个 OTA 分区开始运行）。您可以使用 `make menuconfig` 配置串口的烧录。

在运行 `make flash` 之前无需单独运行 `make all`。`make flash` 命令本身就可以自动构建所需的文件。

仅编译和烧录应用程序 在首次烧录完成后，您可以只希望烧录并编译应用程序，而不再包括 bootloader 和分区表。这种情况可以使用以下命令：

- `make app` –仅编译应用程序
- `make app-flash` –仅烧录应用程序

`make app-flash` –在有需要时自动重新编译应用程序

如果没有变化，每次都重新烧录、编译 bootloader 和分区表也没有坏处。

分区表 项目编译完成后，”build” 目录下将出现一个名为 “my_app.bin” （例）的二进制文件。这是一个可由 bootloader 加载的 ESP32 映像文件。

ESP32 的一块 flash 可以包含多个应用程序，以及多种数据（校准数据、文件系统、参数存储等）。因此，在向 flash 烧录分区表时，通常保留 0x8000 的偏移量。

分区表中的每个条目都有名称（标签）、类型（app、数据或其他）、子类型及在 flash 中的偏移量。

使用分区表最简便的方法是：运行 `make menuconfig`，选择一个预定义分区表：

- “Single factory app, no OTA”
- “Factory app, two OTA definitions”

上述两种情况中，factory app 在 flash 中的烧录偏移地址均为 0x10000。运行 `make partition_table` 命令可以打印分区表摘要。

更多有关分区表 及自定义分区表的内容，请见相关文档。

Eclipse IDE 的创建和烧录指南（传统 GNU Make）

注解： ESP-IDF V4.0 及之后版本的默认构建系统为 CMake。本文档主要针对之前基于 GNU Make 的传统构建系统。请注意，未来，我们可能不会继续支持基于 GNU Make 的构建系统。

安装 Eclipse IDE Eclipse IDE 是一个可视化的集成开发环境，可用于编写、编译和调试 ESP-IDF 项目。

- 首先，请在您的平台上安装相应的 ESP-IDF，具体步骤请按照您的操作系统（Windows、OS X 和 Linux）对应的指示进行安装。
- 我们建议，您可以首先使用命令行创建一个项目，大致熟悉项目的创建流程。此外，您还需要使用命令行 (`make menuconfig`) 对您的 ESP-IDF 项目进行配置。目前，Eclipse 还无法配置 ESP-IDF 项目。
- 从 eclipse.org 下载对应操作系统的 Eclipse 安装器。
- 运行 Eclipse Installer，选择 **“Eclipse for C/C++ Development”** （有的版本也可能显示为 CDT）。

配置 Eclipse 打开安装好的 Eclipse IDE，并按照以下步骤进行操作：

导入新项目

- Eclipse 需使用 ESP-IDF 的 Makefile 功能。因此，在使用 Eclipse 前，您需要先创建一个 ESP-IDF 项目。在创建 ESP-IDF 项目时，您可以使用 GitHub 中的 idf-template 项目模版，或从 ESP-IDF 子目录中复制一个 example。
- 运行 Eclipse，选择 **“File”** -> **“Import…”** 。
- 在弹出的对话框中选择 **“C/C++”** -> **“Existing Code as Makefile Project”** ，点击 **“Next”** 。
- 进入下一界面，在 **“Existing Code Location”** 处输入您的 IDF 项目路径。注意，这里应输入 ESP-IDF 项目的路径，而非 ESP-IDF 本身的路径（这个稍后再填）。此外，您指定的目标路径中应包含名为 `Makefile` （项目 Makefile）的文件。
- 本界面中，找到 **“Toolchain for Indexer Settings”** ，选择 **“Cross GCC”** ，最后点击 **“Finish”** 。

项目属性

- 新项目将出现在 **“Project Explorer”** 下。右键选择该项目，并在菜单中选择 **“Properties”** 。
- 点击 **“C/C++ Build”** 下的 **“Environment”** 属性页，选择 **“Add…”**，并在对应位置输入 `BATCH_BUILD` 和 `1`。
- 再次点击 **“Add…”** ，并在 `IDF_PATH` 处输入 ESP-IDF 所在的完整安装路径。Windows 用户可以从 Windows 浏览器复制 `IDF_PATH`。
- 编辑 `PATH` 环境变量。保留当前值，并将该路径增加至 Xtensa 工具链安装路径后，作为 IDF 设置的一部分（如已增加至 PATH，则可忽略）。工具链的常见路径为 `/home/user-name/esp/xtensa-esp32-elf/bin` （例）。注意，您需要在补充的路径前增加一个冒号 (*:*)。Windows 用户

需要将 PATH 环境变量前增加 C:\msys32\mingw32\bin;C:\msys32\opt\xtensa-esp32-elf\bin;C:\msys32\usr\bin。注意，请根据 msys32 的具体安装路径，修改 PATH 环境变量。

- MacOS 用户需要增加一个 PYTHONPATH 环境变量，并将其设置为 /Library/Frameworks/Python.framework/Versions/2.7/lib/python2.7/site-packages。保证系统中预先安装的 Python （需安装 pyserial 模块）可以覆盖 Eclipse 内置的任何 Python。

特别说明：如果您的 IDF_PATH 或项目不在 C:\msys32\home 之下，则应使用自定义编译命令：python ${IDF_PATH}/tools/windows/eclipse_make.py （请注意，这种方法可能导致编译时间显著增加。）

- 前往 **“C/C++ General”** -> **“Preprocessor Include Paths”** 属性页面。点击 **“Providers”** 选项卡。
  - 从 **“Providers”** 列表中选择 **“CDT Cross GCC Built-in Compiler Settings”**，将 **“Command to get compiler specs”** 修改为 xtensa-esp32-elf-gcc ${FLAGS} -std=c++11 -E -P -v -dD "${INPUTS}"。
  - 从 **“Providers”** 列表中选择 **“CDT GCC Build Output Parser”**，将 **“Compiler command pattern”** 修改为 xtensa-esp32-elf-(gcc|g\+\+|c\+\+|cc|cpp|clang)。
- 前往 **“C/C++ General”** -> **“Indexer”** 属性页面。
  - 勾选 **“Enable project specific settings”**，启用本页面上的其他设置。
  - 取消勾选 **“Allow heuristic resolution of includes”**。勾选该选项有时会导致 Eclipse 无法找到正确的头文件目录。
- 前往 **“C/C++ Build”** -> **“Behavior”** 属性页面。
  - 勾选 **“Enable parallel build”**，启用“并行编译”配置。

在 Eclipse 中构建项目 在首次创建项目前，Eclipse IDE 可能会显示大量有关未定义值的错误和警告，这是因为 ESP-IDF 在编译过程中会自动生成一些源文件。因此，这些错误和警告均会在项目编译完成后消失。

- 点击 **“OK”**，关闭 Eclipse IDE 中的 **“Properties”** 对话框。
- 在 Eclipse IDE 界面外，打开命令提示符窗口。进入项目目录，运行 make menuconfig 设置项目的 ESP-IDF 配置。现阶段，您还无法在 Eclipse 中完成本操作。
- 回到 Eclipse IDE 界面，选择 **“Project”** -> **“Build”** 开始编译项目。

小提示：如果您的项目不是通过 Eclipse 创建的，则在选择 **“Project”** -> **“Build”** 前还需进行 **“Project”** -> **“Clean”** 操作。如此操作后，Eclipse 才能查看所有源文件的编译器参数，并借此确定头文件包含路径。

在 Eclipse 中烧录项目 您可以将 make flash 目标集成在 Eclipse 项目中，这样就可以通过 Eclipse UI 调用 esptool.py 进行烧录：

- 打开 **“Project Explorer”**，并右击您的项目（请注意右击项目本身，而非项目下的子文件，否则 Eclipse 可能会找到错误的 Makefile）。
- 从菜单中选择 **“Build Targets”** -> **“Create…”**。
- 目标名称输入“flash”，其他选项使用默认值。
- 这时，您可以选择 **“Project”** -> **“Build Target”** -> **“Build”**（快捷键：Shift + F9），创建自定义烧录目标，用于编译、烧录项目。

注意，您仍需要通过 make menuconfig 设置串行端口和其他烧录选项。make menuconfig 仍需通过命令行操作（具体请见对应操作系统的指南）。

如有需要，请按照相同步骤添加 bootloader 和 partition_table 目标。

工具链自定义设置（传统 GNU Make 系统） 除了从乐鑫官网（请见第一步：设置工具链）下载二进制工具链外，您还可以自行编译工具链。

注解： ESP-IDF V4.0 及之后版本的默认构建系统为 CMake。本文档主要针对之前基于 GNU Make 的传统构建系统。请注意，未来，我们可能不会继续支持基于 GNU Make 的构建系统。

如无特殊需求，建议直接使用我们提供的预编译二进制工具链。不过，您可以在以下情况考虑自行编译工具链：

- 需要定制工具链编译配置
- 需要使用其他 GCC 版本（如 4.8.5）
- 需要破解 gcc、newlib 或 libstdc++
- 有相关兴趣或时间充裕
- 不信任从网站下载的 bin 文件

如需自行编译工具链，请查看以下文档：

Chapter 2

API 参考

2.1 蓝牙 API

2.1.1 Controller && VHCI

Application Example

Check bluetooth/hci folder in ESP-IDF examples, which contains the following application:

- This is a BLE advertising demo with virtual HCI interface. Send Reset/ADV_PARAM/ADV_DATA/ADV_ENABLE HCI command for BLE advertising - bluetooth/hci/controller_vhci_ble_adv.

API Reference

Header File

- bt/include/esp32/include/esp_bt.h

Functions

esp_err_t **esp_ble_tx_power_set**(*esp_ble_power_type_t power_type*, *esp_power_level_t power_level*)

Set BLE TX power Connection Tx power should only be set after connection created.

Return ESP_OK - success, other - failed

Parameters

- `power_type`: : The type of which tx power, could set Advertising/Connection/Default and etc
- `power_level`: Power level(index) corresponding to absolute value(dbm)

esp_power_level_t **esp_ble_tx_power_get**(*esp_ble_power_type_t power_type*)

Get BLE TX power Connection Tx power should only be get after connection created.

Return >= 0 - Power level, < 0 - Invalid

Parameters

- `power_type`: : The type of which tx power, could set Advertising/Connection/Default and etc

esp_err_t **esp_bredr_tx_power_set**(*esp_power_level_t min_power_level*, *esp_power_level_t max_power_level*)

Set BR/EDR TX power BR/EDR power control will use the power in range of minimum value and maximum value. The power level will effect the global BR/EDR TX power, such inquire, page, connection and so on. Please call the function after esp_bt_controller_enable and before any function which cause RF do TX. So you can call the function before doing discovery, profile init and so on. For example, if you want BR/EDR use the new TX power to do inquire, you should call this function before inquire. Another word, If call this function when BR/EDR is in inquire(ING), please do inquire again after call this function. Default minimum power level is ESP_PWR_LVL_N0, and maximum power level is ESP_PWR_LVL_P3.

Return ESP_OK - success, other - failed

Parameters

- `min_power_level`: The minimum power level
- `max_power_level`: The maximum power level

esp_err_t **esp_bredr_tx_power_get** (*esp_power_level_t *min_power_level*, *esp_power_level_t *max_power_level*)

Get BR/EDR TX power If the argument is not NULL, then store the corresponding value.

Return ESP_OK - success, other - failed

Parameters

- `min_power_level`: The minimum power level
- `max_power_level`: The maximum power level

esp_err_t **esp_bredr_sco_datapath_set** (*esp_sco_data_path_t data_path*)

Set default SCO data path Should be called after controller is enabled, and before (e)SCO link is established.

Return ESP_OK - success, other - failed

Parameters

- `data_path`: SCO data path

esp_err_t **esp_bt_controller_init** (*esp_bt_controller_config_t *cfg*)

Initialize BT controller to allocate task and other resource. This function should be called only once, before any other BT functions are called.

Return ESP_OK - success, other - failed

Parameters

- `cfg`: Initial configuration of BT controller. Different from previous version, there' s a mode and some connection configuration in "cfg" to configure controller work mode and allocate the resource which is needed.

esp_err_t **esp_bt_controller_deinit** (void)

De-initialize BT controller to free resource and delete task. You should stop advertising and scanning, as well as disconnect all existing connections before de-initializing BT controller.

This function should be called only once, after any other BT functions are called.

Return ESP_OK - success, other - failed

esp_err_t **esp_bt_controller_enable** (*esp_bt_mode_t mode*)

Enable BT controller. Due to a known issue, you cannot call esp_bt_controller_enable() a second time to change the controller mode dynamically. To change controller mode, call esp_bt_controller_disable() and then call esp_bt_controller_enable() with the new mode.

Return ESP_OK - success, other - failed

Parameters

- `mode`: : the mode(BLE/BT/BTDM) to enable. For compatible of API, retain this argument. This mode must be equal as the mode in "cfg" of esp_bt_controller_init().

esp_err_t **esp_bt_controller_disable** (void)

Disable BT controller.

Return ESP_OK - success, other - failed

esp_bt_controller_status_t **esp_bt_controller_get_status** (void)

Get BT controller is initialised/de-initialised/enabled/disabled.

Return status value

bool **esp_vhci_host_check_send_available** (void)

esp_vhci_host_check_send_available used for check actively if the host can send packet to controller or not.

Return true for ready to send, false means cannot send packet

void **esp_vhci_host_send_packet** (uint8_t *data, uint16_t *len*)

esp_vhci_host_send_packet host send packet to controller

Should not call this function from within a critical section or when the scheduler is suspended.

Parameters

- `data`: the packet point
- `len`: the packet length

esp_err_t **esp_vhci_host_register_callback**(**const** *esp_vhci_host_callback_t* **callback*)

esp_vhci_host_register_callback register the vhci reference callback struct defined by vhci_host_callback structure.

Return ESP_OK - success, ESP_FAIL - failed

Parameters

- `callback`: *esp_vhci_host_callback* type variable

esp_err_t **esp_bt_controller_mem_release**(*esp_bt_mode_t mode*)

esp_bt_controller_mem_release release the controller memory as per the mode

This function releases the BSS, data and other sections of the controller to heap. The total size is about 70k bytes.

esp_bt_controller_mem_release(mode) should be called only before esp_bt_controller_init() or after esp_bt_controller_deinit().

Note that once BT controller memory is released, the process cannot be reversed. It means you cannot use the bluetooth mode which you have released by this function.

If your firmware will later upgrade the Bluetooth controller mode (BLE -> BT Classic or disabled -> enabled) then do not call this function.

If the app calls esp_bt_controller_enable(ESP_BT_MODE_BLE) to use BLE only then it is safe to call esp_bt_controller_mem_release(ESP_BT_MODE_CLASSIC_BT) at initialization time to free unused BT Classic memory.

If the mode is ESP_BT_MODE_BTDM, then it may be useful to call API esp_bt_mem_release(ESP_BT_MODE_BTDM) instead, which internally calls esp_bt_controller_mem_release(ESP_BT_MODE_BTDM) and additionally releases the BSS and data consumed by the BT/BLE host stack to heap. For more details about usage please refer to the documentation of esp_bt_mem_release() function

Return ESP_OK - success, other - failed

Parameters

- `mode`: : the mode want to release memory

esp_err_t **esp_bt_mem_release**(*esp_bt_mode_t mode*)

esp_bt_mem_release release controller memory and BSS and data section of the BT/BLE host stack as per the mode

This function first releases controller memory by internally calling esp_bt_controller_mem_release(). Additionally, if the mode is set to ESP_BT_MODE_BTDM, it also releases the BSS and data consumed by the BT/BLE host stack to heap

Note that once BT memory is released, the process cannot be reversed. It means you cannot use the bluetooth mode which you have released by this function.

If your firmware will later upgrade the Bluetooth controller mode (BLE -> BT Classic or disabled -> enabled) then do not call this function.

If you never intend to use bluetooth in a current boot-up cycle, you can call esp_bt_mem_release(ESP_BT_MODE_BTDM) before esp_bt_controller_init or after esp_bt_controller_deinit.

For example, if a user only uses bluetooth for setting the WiFi configuration, and does not use bluetooth in the rest of the product operation" . In such cases, after receiving the WiFi configuration, you can disable/deinit bluetooth and release its memory. Below is the sequence of APIs to be called for such scenarios:

```
esp_bluedroid_disable();
esp_bluedroid_deinit();
esp_bt_controller_disable();
```

(下页继续)

(续上页)

```
esp_bt_controller_deinit();
esp_bt_mem_release(ESP_BT_MODE_BTDM);
```

Note In case of NimBLE host, to release BSS and data memory to heap, the mode needs to be set to ESP_BT_MODE_BTDM as controller is dual mode.

Return ESP_OK - success, other - failed

Parameters

- `mode`: : the mode whose memory is to be released

esp_err_t **esp_bt_sleep_enable**(void)

enable bluetooth to enter modem sleep

Note that this function shall not be invoked before esp_bt_controller_enable()

There are currently two options for bluetooth modem sleep, one is ORIG mode, and another is EVED Mode. EVED Mode is intended for BLE only.

For ORIG mode: Bluetooth modem sleep is enabled in controller start up by default if CONFIG_CTRL_BTDM_MODEM_SLEEP is set and "ORIG mode" is selected. In ORIG modem sleep mode, bluetooth controller will switch off some components and pause to work every now and then, if there is no event to process; and wakeup according to the scheduled interval and resume the work. It can also wakeup earlier upon external request using function "esp_bt_controller_wakeup_request" .

Return

- ESP_OK : success
- other : failed

esp_err_t **esp_bt_sleep_disable**(void)

disable bluetooth modem sleep

Note that this function shall not be invoked before esp_bt_controller_enable()

If esp_bt_sleep_disable() is called, bluetooth controller will not be allowed to enter modem sleep;

If ORIG modem sleep mode is in use, if this function is called, bluetooth controller may not immediately wake up if it is dormant then. In this case, esp_bt_controller_wakeup_request() can be used to shorten the time for wakeup.

Return

- ESP_OK : success
- other : failed

esp_err_t **esp_ble_scan_dupilcate_list_flush**(void)

Manually clear scan duplicate list.

Note that scan duplicate list will be automatically cleared when the maximum amount of device in the filter is reached the amount of device in the filter can be configured in menuconfig.

Note This function name is incorrectly spelled, it will be fixed in release 5.x version.

Return

- ESP_OK : success
- other : failed

void **esp_wifi_bt_power_domain_on**(void)

bt Wi-Fi power domain power on

void **esp_wifi_bt_power_domain_off**(void)

bt Wi-Fi power domain power off

Structures

struct esp_bt_controller_config_t

Controller config options, depend on config mask. Config mask indicate which functions enabled, this means some options or parameters of some functions enabled by config mask.

Public Members

uint16_t **controller_task_stack_size**
Bluetooth controller task stack size

uint8_t **controller_task_prio**
Bluetooth controller task priority

uint8_t **hci_uart_no**
If use UART1/2 as HCI IO interface, indicate UART number

uint32_t **hci_uart_baudrate**
If use UART1/2 as HCI IO interface, indicate UART baudrate

uint8_t **scan_duplicate_mode**
scan duplicate mode

uint8_t **scan_duplicate_type**
scan duplicate type

uint16_t **normal_adv_size**
Normal adv size for scan duplicate

uint16_t **mesh_adv_size**
Mesh adv size for scan duplicate

uint16_t **send_adv_reserved_size**
Controller minimum memory value

uint32_t **controller_debug_flag**
Controller debug log flag

uint8_t **mode**
Controller mode: BR/EDR, BLE or Dual Mode

uint8_t **ble_max_conn**
BLE maximum connection numbers

uint8_t **bt_max_acl_conn**
BR/EDR maximum ACL connection numbers

uint8_t **bt_sco_datapath**
SCO data path, i.e. HCI or PCM module

bool **auto_latency**
BLE auto latency, used to enhance classic BT performance

bool **bt_legacy_auth_vs_evt**
BR/EDR Legacy auth complete event required to protect from BIAS attack

uint8_t **bt_max_sync_conn**
BR/EDR maximum ACL connection numbers. Effective in menuconfig

uint8_t **ble_sca**
BLE low power crystal accuracy index

uint8_t **pcm_role**
PCM role (master & slave)

uint8_t **pcm_polar**
PCM polar trig (falling clk edge & rising clk edge)

bool **hli**
Using high level interrupt or not

uint16_t **dup_list_refresh_period**
Duplicate scan list refresh period

uint32_t **magic**
Magic number

struct esp_vhci_host_callback
esp_vhci_host_callback used for vhci call host function to notify what host need to do

Public Members

void (***notify_host_send_available**) (void)
callback used to notify that the host can send packet to controller

int (***notify_host_recv**) (uint8_t *data, uint16_t len)
callback used to notify that the controller has a packet to send to the host

Macros

ESP_BT_CONTROLLER_CONFIG_MAGIC_VAL

BT_CONTROLLER_INIT_CONFIG_DEFAULT()

Type Definitions

typedef struct *esp_vhci_host_callback* **esp_vhci_host_callback_t**
esp_vhci_host_callback used for vhci call host function to notify what host need to do

Enumerations

enum esp_bt_mode_t
Bluetooth mode for controller enable/disable.

Values:

ESP_BT_MODE_IDLE = 0x00
Bluetooth is not running

ESP_BT_MODE_BLE = 0x01
Run BLE mode

ESP_BT_MODE_CLASSIC_BT = 0x02
Run Classic BT mode

ESP_BT_MODE_BTDM = 0x03
Run dual mode

enum [anonymous]
BLE sleep clock accuracy(SCA), values for ble_sca field in *esp_bt_controller_config_t*, currently only ESP_BLE_SCA_500PPM and ESP_BLE_SCA_250PPM are supported.

Values:

ESP_BLE_SCA_500PPM = 0
BLE SCA at 500ppm

ESP_BLE_SCA_250PPM
BLE SCA at 250ppm

ESP_BLE_SCA_150PPM
BLE SCA at 150ppm

ESP_BLE_SCA_100PPM
BLE SCA at 100ppm

ESP_BLE_SCA_75PPM
BLE SCA at 75ppm

ESP_BLE_SCA_50PPM
BLE SCA at 50ppm

ESP_BLE_SCA_30PPM
BLE SCA at 30ppm

ESP_BLE_SCA_20PPM
BLE SCA at 20ppm

enum esp_bt_controller_status_t
Bluetooth controller enable/disable/initialised/de-initialised status.

Values:

ESP_BT_CONTROLLER_STATUS_IDLE = 0

ESP_BT_CONTROLLER_STATUS_INITED

ESP_BT_CONTROLLER_STATUS_ENABLED

ESP_BT_CONTROLLER_STATUS_NUM

enum esp_ble_power_type_t
BLE tx power type ESP_BLE_PWR_TYPE_CONN_HDL0-8: for each connection, and only be set after connection completed. when disconnect, the correspond TX power is not effected. ESP_BLE_PWR_TYPE_ADV : for advertising/scan response. ESP_BLE_PWR_TYPE_SCAN : for scan. ESP_BLE_PWR_TYPE_DEFAULT : if each connection's TX power is not set, it will use this default value. if neither in scan mode nor in adv mode, it will use this default value. If none of power type is set, system will use ESP_PWR_LVL_P3 as default for ADV/SCAN/CONN0-9.

Values:

ESP_BLE_PWR_TYPE_CONN_HDL0 = 0
For connection handle 0

ESP_BLE_PWR_TYPE_CONN_HDL1 = 1
For connection handle 1

ESP_BLE_PWR_TYPE_CONN_HDL2 = 2
For connection handle 2

ESP_BLE_PWR_TYPE_CONN_HDL3 = 3
For connection handle 3

ESP_BLE_PWR_TYPE_CONN_HDL4 = 4
For connection handle 4

ESP_BLE_PWR_TYPE_CONN_HDL5 = 5
For connection handle 5

ESP_BLE_PWR_TYPE_CONN_HDL6 = 6
For connection handle 6

ESP_BLE_PWR_TYPE_CONN_HDL7 = 7
For connection handle 7

ESP_BLE_PWR_TYPE_CONN_HDL8 = 8
For connection handle 8

ESP_BLE_PWR_TYPE_ADV = 9
For advertising

ESP_BLE_PWR_TYPE_SCAN = 10
For scan

ESP_BLE_PWR_TYPE_DEFAULT = 11
For default, if not set other, it will use default value

ESP_BLE_PWR_TYPE_NUM = 12
TYPE numbers

enum esp_power_level_t

Bluetooth TX power level(index), it’ s just a index corresponding to power(dbm).

Values:

ESP_PWR_LVL_N12 = 0
Corresponding to -12dbm

ESP_PWR_LVL_N9 = 1
Corresponding to -9dbm

ESP_PWR_LVL_N6 = 2
Corresponding to -6dbm

ESP_PWR_LVL_N3 = 3
Corresponding to -3dbm

ESP_PWR_LVL_N0 = 4
Corresponding to 0dbm

ESP_PWR_LVL_P3 = 5
Corresponding to +3dbm

ESP_PWR_LVL_P6 = 6
Corresponding to +6dbm

ESP_PWR_LVL_P9 = 7
Corresponding to +9dbm

ESP_PWR_LVL_N14 = *ESP_PWR_LVL_N12*
Backward compatibility! Setting to -14dbm will actually result to -12dbm

ESP_PWR_LVL_N11 = *ESP_PWR_LVL_N9*
Backward compatibility! Setting to -11dbm will actually result to -9dbm

ESP_PWR_LVL_N8 = *ESP_PWR_LVL_N6*
Backward compatibility! Setting to -8dbm will actually result to -6dbm

ESP_PWR_LVL_N5 = *ESP_PWR_LVL_N3*
Backward compatibility! Setting to -5dbm will actually result to -3dbm

ESP_PWR_LVL_N2 = *ESP_PWR_LVL_N0*
Backward compatibility! Setting to -2dbm will actually result to 0dbm

ESP_PWR_LVL_P1 = *ESP_PWR_LVL_P3*
Backward compatibility! Setting to +1dbm will actually result to +3dbm

ESP_PWR_LVL_P4 = *ESP_PWR_LVL_P6*
Backward compatibility! Setting to +4dbm will actually result to +6dbm

ESP_PWR_LVL_P7 = *ESP_PWR_LVL_P9*
Backward compatibility! Setting to +7dbm will actually result to +9dbm

enum esp_sco_data_path_t

Bluetooth audio data transport path.

Values:

ESP_SCO_DATA_PATH_HCI = 0
data over HCI transport

ESP_SCO_DATA_PATH_PCM = 1
data over PCM interface

2.1.2 BT COMMON

BT GENERIC DEFINES

API Reference

Header File

- bt/host/bluedroid/api/include/api/esp_bt_defs.h

Structures

struct esp_bt_uuid_t

UUID type.

Public Members

uint16_t **len**

UUID length, 16bit, 32bit or 128bit

uint16_t **uuid16**

16bit UUID

uint32_t **uuid32**

32bit UUID

uint8_t **uuid128**[**ESP_UUID_LEN_128**]

128bit UUID

union *esp_bt_uuid_t*::**[anonymous] uuid**

UUID

Macros

ESP_BLUEDROID_STATUS_CHECK(status)

ESP_BT_STATUS_BASE_FOR_HCI_ERR

ESP_BT_OCTET16_LEN

ESP_BT_OCTET8_LEN

ESP_DEFAULT_GATT_IF

Default GATT interface id.

ESP_BLE_PRIM_ADV_INT_MIN

Minimum advertising interval for undirected and low duty cycle directed advertising

ESP_BLE_PRIM_ADV_INT_MAX

Maximum advertising interval for undirected and low duty cycle directed advertising

ESP_BLE_CONN_INT_MIN

relate to BTM_BLE_CONN_INT_MIN in stack/btm_ble_api.h

ESP_BLE_CONN_INT_MAX

relate to BTM_BLE_CONN_INT_MAX in stack/btm_ble_api.h

ESP_BLE_CONN_LATENCY_MAX

relate to ESP_BLE_CONN_LATENCY_MAX in stack/btm_ble_api.h

ESP_BLE_CONN_SUP_TOUT_MIN

relate to BTM_BLE_CONN_SUP_TOUT_MIN in stack/btm_ble_api.h

ESP_BLE_CONN_SUP_TOUT_MAX

relate to ESP_BLE_CONN_SUP_TOUT_MAX in stack/btm_ble_api.h

ESP_BLE_CONN_PARAM_UNDEF

ESP_BLE_SCAN_PARAM_UNDEF

ESP_BLE_IS_VALID_PARAM(x, min, max)
Check the param is valid or not.

ESP_UUID_LEN_16

ESP_UUID_LEN_32

ESP_UUID_LEN_128

ESP_BD_ADDR_LEN
Bluetooth address length.

ESP_BLE_ENC_KEY_MASK
Used to exchange the encryption key in the init key & response key.

ESP_BLE_ID_KEY_MASK
Used to exchange the IRK key in the init key & response key.

ESP_BLE_CSR_KEY_MASK
Used to exchange the CSRK key in the init key & response key.

ESP_BLE_LINK_KEY_MASK
Used to exchange the link key(this key just used in the BLE & BR/EDR coexist mode) in the init key & response key.

ESP_APP_ID_MIN
Minimum of the application id.

ESP_APP_ID_MAX
Maximum of the application id.

ESP_BD_ADDR_STR

ESP_BD_ADDR_HEX(addr)

Type Definitions

typedef uint8_t **esp_bt_octet16_t**[**ESP_BT_OCTET16_LEN**]

typedef uint8_t **esp_bt_octet8_t**[**ESP_BT_OCTET8_LEN**]

typedef uint8_t **esp_link_key**[**ESP_BT_OCTET16_LEN**]

typedef uint8_t **esp_bd_addr_t**[**ESP_BD_ADDR_LEN**]
Bluetooth device address.

typedef uint8_t **esp_ble_key_mask_t**

Enumerations

enum esp_bt_status_t
Status Return Value.

Values:

ESP_BT_STATUS_SUCCESS = 0

ESP_BT_STATUS_FAIL

ESP_BT_STATUS_NOT_READY

ESP_BT_STATUS_NOMEM

ESP_BT_STATUS_BUSY

ESP_BT_STATUS_DONE = 5

ESP_BT_STATUS_UNSUPPORTED

ESP_BT_STATUS_PARM_INVALID

ESP_BT_STATUS_UNHANDLED

ESP_BT_STATUS_AUTH_FAILURE

ESP_BT_STATUS_RMT_DEV_DOWN = 10

ESP_BT_STATUS_AUTH_REJECTED

ESP_BT_STATUS_INVALID_STATIC_RAND_ADDR

ESP_BT_STATUS_PENDING

ESP_BT_STATUS_UNACCEPT_CONN_INTERVAL

ESP_BT_STATUS_PARAM_OUT_OF_RANGE

ESP_BT_STATUS_TIMEOUT

ESP_BT_STATUS_PEER_LE_DATA_LEN_UNSUPPORTED

ESP_BT_STATUS_CONTROL_LE_DATA_LEN_UNSUPPORTED

ESP_BT_STATUS_ERR_ILLEGAL_PARAMETER_FMT

ESP_BT_STATUS_MEMORY_FULL = 20

ESP_BT_STATUS_EIR_TOO_LARGE

ESP_BT_STATUS_HCI_SUCCESS = ESP_BT_STATUS_BASE_FOR_HCI_ERR

ESP_BT_STATUS_HCI_PENDING

ESP_BT_STATUS_HCI_ILLEGAL_COMMAND

ESP_BT_STATUS_HCI_NO_CONNECTION

ESP_BT_STATUS_HCI_HW_FAILURE

ESP_BT_STATUS_HCI_PAGE_TIMEOUT

ESP_BT_STATUS_HCI_AUTH_FAILURE

ESP_BT_STATUS_HCI_KEY_MISSING

ESP_BT_STATUS_HCI_MEMORY_FULL

ESP_BT_STATUS_HCI_CONNECTION_TOUT

ESP_BT_STATUS_HCI_MAX_NUM_OF_CONNECTIONS

ESP_BT_STATUS_HCI_MAX_NUM_OF_SCOS

ESP_BT_STATUS_HCI_CONNECTION_EXISTS

ESP_BT_STATUS_HCI_COMMAND_DISALLOWED

ESP_BT_STATUS_HCI_HOST_REJECT_RESOURCES

ESP_BT_STATUS_HCI_HOST_REJECT_SECURITY

ESP_BT_STATUS_HCI_HOST_REJECT_DEVICE

ESP_BT_STATUS_HCI_HOST_TIMEOUT

ESP_BT_STATUS_HCI_UNSUPPORTED_VALUE

ESP_BT_STATUS_HCI_ILLEGAL_PARAMETER_FMT

ESP_BT_STATUS_HCI_PEER_USER

ESP_BT_STATUS_HCI_PEER_LOW_RESOURCES

ESP_BT_STATUS_HCI_PEER_POWER_OFF

ESP_BT_STATUS_HCI_CONN_CAUSE_LOCAL_HOST

ESP_BT_STATUS_HCI_REPEATED_ATTEMPTS

ESP_BT_STATUS_HCI_PAIRING_NOT_ALLOWED

ESP_BT_STATUS_HCI_UNKNOWN_LMP_PDU

ESP_BT_STATUS_HCI_UNSUPPORTED_REM_FEATURE

ESP_BT_STATUS_HCI_SCO_OFFSET_REJECTED

ESP_BT_STATUS_HCI_SCO_INTERVAL_REJECTED

ESP_BT_STATUS_HCI_SCO_AIR_MODE

ESP_BT_STATUS_HCI_INVALID_LMP_PARAM

ESP_BT_STATUS_HCI_UNSPECIFIED

ESP_BT_STATUS_HCI_UNSUPPORTED_LMP_PARAMETERS

ESP_BT_STATUS_HCI_ROLE_CHANGE_NOT_ALLOWED

ESP_BT_STATUS_HCI_LMP_RESPONSE_TIMEOUT

ESP_BT_STATUS_HCI_LMP_ERR_TRANS_COLLISION

ESP_BT_STATUS_HCI_LMP_PDU_NOT_ALLOWED

ESP_BT_STATUS_HCI_ENCRY_MODE_NOT_ACCEPTABLE

ESP_BT_STATUS_HCI_UNIT_KEY_USED

ESP_BT_STATUS_HCI_QOS_NOT_SUPPORTED

ESP_BT_STATUS_HCI_INSTANT_PASSED

ESP_BT_STATUS_HCI_PAIRING_WITH_UNIT_KEY_NOT_SUPPORTED

ESP_BT_STATUS_HCI_DIFF_TRANSACTION_COLLISION

ESP_BT_STATUS_HCI_UNDEFINED_0x2B

ESP_BT_STATUS_HCI_QOS_UNACCEPTABLE_PARAM

ESP_BT_STATUS_HCI_QOS_REJECTED

ESP_BT_STATUS_HCI_CHAN_CLASSIF_NOT_SUPPORTED

ESP_BT_STATUS_HCI_INSUFFCIENT_SECURITY

ESP_BT_STATUS_HCI_PARAM_OUT_OF_RANGE

ESP_BT_STATUS_HCI_UNDEFINED_0x31

ESP_BT_STATUS_HCI_ROLE_SWITCH_PENDING

ESP_BT_STATUS_HCI_UNDEFINED_0x33

ESP_BT_STATUS_HCI_RESERVED_SLOT_VIOLATION

ESP_BT_STATUS_HCI_ROLE_SWITCH_FAILED

ESP_BT_STATUS_HCI_INQ_RSP_DATA_TOO_LARGE

ESP_BT_STATUS_HCI_SIMPLE_PAIRING_NOT_SUPPORTED

ESP_BT_STATUS_HCI_HOST_BUSY_PAIRING

ESP_BT_STATUS_HCI_REJ_NO_SUITABLE_CHANNEL

ESP_BT_STATUS_HCI_CONTROLLER_BUSY

ESP_BT_STATUS_HCI_UNACCEPT_CONN_INTERVAL

ESP_BT_STATUS_HCI_DIRECTED_ADVERTISING_TIMEOUT

ESP_BT_STATUS_HCI_CONN_TOUT_DUE_TO_MIC_FAILURE

ESP_BT_STATUS_HCI_CONN_FAILED_ESTABLISHMENT

ESP_BT_STATUS_HCI_MAC_CONNECTION_FAILED

enum esp_bt_dev_type_t
Bluetooth device type.

Values:

ESP_BT_DEVICE_TYPE_BREDR = 0x01

ESP_BT_DEVICE_TYPE_BLE = 0x02

ESP_BT_DEVICE_TYPE_DUMO = 0x03

enum esp_ble_addr_type_t
BLE device address type.

Values:

BLE_ADDR_TYPE_PUBLIC = 0x00

BLE_ADDR_TYPE_RANDOM = 0x01

BLE_ADDR_TYPE_RPA_PUBLIC = 0x02

BLE_ADDR_TYPE_RPA_RANDOM = 0x03

enum esp_ble_wl_addr_type_t
white list address type

Values:

BLE_WL_ADDR_TYPE_PUBLIC = 0x00

BLE_WL_ADDR_TYPE_RANDOM = 0x01

BT MAIN API

API Reference

Header File

- bt/host/bluedroid/api/include/api/esp_bt_main.h

Functions

esp_bluedroid_status_t **esp_bluedroid_get_status**(void)
Get bluetooth stack status.

Return Bluetooth stack status

esp_err_t **esp_bluedroid_enable**(void)
Enable bluetooth, must after esp_bluedroid_init().

Return
- ESP_OK : Succeed
- Other : Failed

esp_err_t **esp_bluedroid_disable**(void)
Disable bluetooth, must prior to esp_bluedroid_deinit().

Return
- ESP_OK : Succeed
- Other : Failed

esp_err_t **esp_bluedroid_init**(void)
Init and alloc the resource for bluetooth, must be prior to every bluetooth stuff.

Return
- ESP_OK : Succeed
- Other : Failed

esp_err_t **esp_bluedroid_deinit**(void)
Deinit and free the resource for bluetooth, must be after every bluetooth stuff.

Return
- ESP_OK : Succeed
- Other : Failed

Enumerations

enum esp_bluedroid_status_t
Bluetooth stack status type, to indicate whether the bluetooth stack is ready.

Values:

ESP_BLUEDROID_STATUS_UNINITIALIZED = 0
Bluetooth not initialized

ESP_BLUEDROID_STATUS_INITIALIZED
Bluetooth initialized but not enabled

ESP_BLUEDROID_STATUS_ENABLED
Bluetooth initialized and enabled

BT DEVICE APIs

Overview Bluetooth device reference APIs.

API Reference

Header File

- bt/host/bluedroid/api/include/api/esp_bt_device.h

Functions

const uint8_t ***esp_bt_dev_get_address**(void)
Get bluetooth device address. Must use after "esp_bluedroid_enable" .

Return bluetooth device address (six bytes), or NULL if bluetooth stack is not enabled

esp_err_t **esp_bt_dev_set_device_name**(**const** char **name*)
Set bluetooth device name. This function should be called after esp_bluedroid_enable() completes successfully.

A BR/EDR/LE device type shall have a single Bluetooth device name which shall be identical irrespective of the physical channel used to perform the name discovery procedure.

Return
- ESP_OK : Succeed
- ESP_ERR_INVALID_ARG : if name is NULL pointer or empty, or string length out of limit
- ESP_ERR_INVALID_STATE : if bluetooth stack is not yet enabled
- ESP_FAIL : others

Parameters
- `[in] name`: : device name to be set

2.1.3 BT LE

GAP API

Application Example Check bluetooth/bluedroid/ble folder in ESP-IDF examples, which contains the following demos and their tutorials:

- This is a SMP security client demo and its tutorial. This demo initiates its security parameters and acts as a GATT client, which can send a security request to the peer device and then complete the encryption procedure.
  - bluetooth/bluedroid/ble/gatt_security_client
  - GATT Security Client Example Walkthrough
- This is a SMP security server demo and its tutorial. This demo initiates its security parameters and acts as a GATT server, which can send a pair request to the peer device and then complete the encryption procedure.
  - bluetooth/bluedroid/ble/gatt_security_server
  - GATT Security Server Example Walkthrough

API Reference

Header File

- bt/host/bluedroid/api/include/api/esp_gap_ble_api.h

Functions

esp_err_t **esp_ble_gap_register_callback**(*esp_gap_ble_cb_t callback*)

This function is called to occur gap event, such as scan result.

Return
- ESP_OK : success
- other : failed

Parameters
- `[in] callback`: callback function

esp_err_t **esp_ble_gap_config_adv_data**(*esp_ble_adv_data_t *adv_data*)

This function is called to override the BTA default ADV parameters.

Return
- ESP_OK : success
- other : failed

Parameters
- `[in] adv_data`: Pointer to User defined ADV data structure. This memory space can not be freed until callback of config_adv_data is received.

esp_err_t **esp_ble_gap_set_scan_params**(*esp_ble_scan_params_t *scan_params*)

This function is called to set scan parameters.

Return
- ESP_OK : success
- other : failed

Parameters
- `[in] scan_params`: Pointer to User defined scan_params data structure. This memory space can not be freed until callback of set_scan_params

esp_err_t **esp_ble_gap_start_scanning**(uint32_t *duration*)

This procedure keep the device scanning the peer device which advertising on the air.

Return
- ESP_OK : success
- other : failed

Parameters
- `[in] duration`: Keeping the scanning time, the unit is second.

esp_err_t **esp_ble_gap_stop_scanning**(void)

This function call to stop the device scanning the peer device which advertising on the air.

Return
- ESP_OK : success
  - other : failed

esp_err_t **esp_ble_gap_start_advertising**(*esp_ble_adv_params_t* **adv_params*)
This function is called to start advertising.

Return
- ESP_OK : success
- other : failed

Parameters
- `[in] adv_params`: pointer to User defined adv_params data structure.

esp_err_t **esp_ble_gap_stop_advertising**(void)
This function is called to stop advertising.

Return
- ESP_OK : success
- other : failed

esp_err_t **esp_ble_gap_update_conn_params**(*esp_ble_conn_update_params_t* **params*)
Update connection parameters, can only be used when connection is up.

Return
- ESP_OK : success
- other : failed

Parameters
- `[in] params`: - connection update parameters

esp_err_t **esp_ble_gap_set_pkt_data_len**(*esp_bd_addr_t remote_device*, uint16_t *tx_data_length*)
This function is to set maximum LE data packet size.

Return
- ESP_OK : success
- other : failed

esp_err_t **esp_ble_gap_set_rand_addr**(*esp_bd_addr_t rand_addr*)
This function sets the static Random Address and Non-Resolvable Private Address for the application.

Return
- ESP_OK : success
- other : failed

Parameters
- `[in] rand_addr`: the random address which should be setting

esp_err_t **esp_ble_gap_clear_rand_addr**(void)
This function clears the random address for the application.

Return
- ESP_OK : success
- other : failed

esp_err_t **esp_ble_gap_config_local_privacy**(bool *privacy_enable*)
Enable/disable privacy on the local device.

Return
- ESP_OK : success
- other : failed

Parameters
- `[in] privacy_enable`: - enable/disable privacy on remote device.

esp_err_t **esp_ble_gap_config_local_icon**(uint16_t *icon*)
set local gap appearance icon

Return
- ESP_OK : success
- other : failed

Parameters

- `[in] icon`: - External appearance value, these values are defined by the Bluetooth SIG, please refer to https://www.bluetooth.com/specifications/gatt/viewer?attributeXmlFile=org.bluetooth.characteristic.gap.appearance.xml

esp_err_t **esp_ble_gap_update_whitelist**(bool *add_remove*, *esp_bd_addr_t* *remote_bda*, *esp_ble_wl_addr_type_t* *wl_addr_type*)

Add or remove device from white list.

Return
- ESP_OK : success
- other : failed

Parameters
- `[in] add_remove`: the value is true if added the ble device to the white list, and false remove to the white list.
- `[in] remote_bda`: the remote device address add/remove from the white list.
- `[in] wl_addr_type`: whitelist address type

esp_err_t **esp_ble_gap_clear_whitelist**(void)

Clear all white list.

Return
- ESP_OK : success
- other : failed

esp_err_t **esp_ble_gap_get_whitelist_size**(uint16_t **length*)

Get the whitelist size in the controller.

Return
- ESP_OK : success
- other : failed

Parameters
- `[out] length`: the white list length.

esp_err_t **esp_ble_gap_set_prefer_conn_params**(*esp_bd_addr_t* *bd_addr*, uint16_t *min_conn_int*, uint16_t *max_conn_int*, uint16_t *slave_latency*, uint16_t *supervision_tout*)

This function is called to set the preferred connection parameters when default connection parameter is not desired before connecting. This API can only be used in the master role.

Return
- ESP_OK : success
- other : failed

Parameters
- `[in] bd_addr`: BD address of the peripheral
- `[in] min_conn_int`: minimum preferred connection interval
- `[in] max_conn_int`: maximum preferred connection interval
- `[in] slave_latency`: preferred slave latency
- `[in] supervision_tout`: preferred supervision timeout

esp_err_t **esp_ble_gap_set_device_name**(**const** char **name*)

Set device name to the local device.

Return
- ESP_OK : success
- other : failed

Parameters
- `[in] name`: - device name.

esp_err_t **esp_ble_gap_get_device_name**(void)

Get device name of the local device.

Return
- ESP_OK : success

- other : failed

esp_err_t **esp_ble_gap_get_local_used_addr**(*esp_bd_addr_t local_used_addr*, uint8_t **addr_type*)

This function is called to get local used address and address type. uint8_t *esp_bt_dev_get_address(void) get the public address.

Return - ESP_OK : success
- other : failed

Parameters
- `[in] local_used_addr`: - current local used ble address (six bytes)
- `[in] addr_type`: - ble address type

uint8_t ***esp_ble_resolve_adv_data**(uint8_t **adv_data*, uint8_t *type*, uint8_t **length*)

This function is called to get ADV data for a specific type.

Return pointer of ADV data

Parameters
- `[in] adv_data`: - pointer of ADV data which to be resolved
- `[in] type`: - finding ADV data type
- `[out] length`: - return the length of ADV data not including type

esp_err_t **esp_ble_gap_config_adv_data_raw**(uint8_t **raw_data*, uint32_t *raw_data_len*)

This function is called to set raw advertising data. User need to fill ADV data by self.

Return
- ESP_OK : success
- other : failed

Parameters
- `[in] raw_data`: : raw advertising data
- `[in] raw_data_len`: : raw advertising data length , less than 31 bytes

esp_err_t **esp_ble_gap_config_scan_rsp_data_raw**(uint8_t **raw_data*, uint32_t *raw_data_len*)

This function is called to set raw scan response data. User need to fill scan response data by self.

Return
- ESP_OK : success
- other : failed

Parameters
- `[in] raw_data`: : raw scan response data
- `[in] raw_data_len`: : raw scan response data length , less than 31 bytes

esp_err_t **esp_ble_gap_read_rssi**(*esp_bd_addr_t remote_addr*)

This function is called to read the RSSI of remote device. The address of link policy results are returned in the gap callback function with ESP_GAP_BLE_READ_RSSI_COMPLETE_EVT event.

Return
- ESP_OK : success
- other : failed

Parameters
- `[in] remote_addr`: : The remote connection device address.

esp_err_t **esp_ble_gap_add_duplicate_scan_exceptional_device**(*esp_ble_duplicate_exceptional_info_type_t type*, *esp_duplicate_info_t device_info*)

This function is called to add a device info into the duplicate scan exceptional list.

Return
- ESP_OK : success
- other : failed

Parameters

- `[in] type`: device info type, it is defined in esp_ble_duplicate_exceptional_info_type_t when type is MESH_BEACON_TYPE, MESH_PROV_SRV_ADV or MESH_PROXY_SRV_ADV , device_info is invalid.
- `[in] device_info`: the device information.

esp_err_t **esp_ble_gap_remove_duplicate_scan_exceptional_device**(*esp_ble_duplicate_exceptional_info_type_t type*, *esp_duplicate_info_t device_info*)

This function is called to remove a device info from the duplicate scan exceptional list.

Return
- ESP_OK : success
- other : failed

Parameters
- `[in] type`: device info type, it is defined in esp_ble_duplicate_exceptional_info_type_t when type is MESH_BEACON_TYPE, MESH_PROV_SRV_ADV or MESH_PROXY_SRV_ADV , device_info is invalid.
- `[in] device_info`: the device information.

esp_err_t **esp_ble_gap_clean_duplicate_scan_exceptional_list**(*esp_duplicate_scan_exceptional_list_type_t list_type*)

This function is called to clean the duplicate scan exceptional list. This API will delete all device information in the duplicate scan exceptional list.

Return
- ESP_OK : success
- other : failed

Parameters
- `[in] list_type`: duplicate scan exceptional list type, the value can be one or more of esp_duplicate_scan_exceptional_list_type_t.

esp_err_t **esp_ble_gap_set_security_param**(*esp_ble_sm_param_t param_type*, void **value*, uint8_t *len*)

Set a GAP security parameter value. Overrides the default value.

Secure connection is highly recommended to avoid some major vulnerabilities like ‘Impersonation in the Pin Pairing Protocol’ (CVE-2020-26555) and ‘Authentication of the LE Legacy Pairing Protocol’.

To accept only `secure connection mode`, it is necessary do as following:

1. Set bit `ESP_LE_AUTH_REQ_SC_ONLY` (`param_type` is `ESP_BLE_SM_AUTHEN_REQ_MODE`), bit `ESP_LE_AUTH_BOND` and bit `ESP_LE_AUTH_REQ_MITM` is optional as required.
2. Set to `ESP_BLE_ONLY_ACCEPT_SPECIFIED_AUTH_ENABLE` (`param_type` is `ESP_BLE_SM_ONLY_ACCEPT_SPECIFIED_SEC_AUTH`).

Return - ESP_OK : success
- other : failed

Parameters
- `[in] param_type`: : the type of the param which to be set
- `[in] value`: : the param value
- `[in] len`: : the length of the param value

esp_err_t **esp_ble_gap_security_rsp**(*esp_bd_addr_t bd_addr*, bool *accept*)

Grant security request access.

Return - ESP_OK : success
- other : failed

Parameters
- `[in] bd_addr`: : BD address of the peer
- `[in] accept`: : accept the security request or not

esp_err_t **esp_ble_set_encryption**(*esp_bd_addr_t bd_addr*, *esp_ble_sec_act_t sec_act*)

Set a gap parameter value. Use this function to change the default GAP parameter values.

Return - ESP_OK : success
- other : failed

Parameters
- `[in] bd_addr`: : the address of the peer device need to encryption
- `[in] sec_act`: : This is the security action to indicate what kind of BLE security level is required for the BLE link if the BLE is supported

esp_err_t **esp_ble_passkey_reply** (*esp_bd_addr_t bd_addr*, bool *accept*, uint32_t *passkey*)

Reply the key value to the peer device in the legacy connection stage.

Return - ESP_OK : success
- other : failed

Parameters
- `[in] bd_addr`: : BD address of the peer
- `[in] accept`: : passkey entry successful or declined.
- `[in] passkey`: : passkey value, must be a 6 digit number, can be lead by 0.

esp_err_t **esp_ble_confirm_reply** (*esp_bd_addr_t bd_addr*, bool *accept*)

Reply the confirm value to the peer device in the secure connection stage.

Return - ESP_OK : success
- other : failed

Parameters
- `[in] bd_addr`: : BD address of the peer device
- `[in] accept`: : numbers to compare are the same or different.

esp_err_t **esp_ble_remove_bond_device** (*esp_bd_addr_t bd_addr*)

Removes a device from the security database list of peer device. It manages unpairing event while connected.

Return - ESP_OK : success
- other : failed

Parameters
- `[in] bd_addr`: : BD address of the peer device

int **esp_ble_get_bond_device_num** (void)

Get the device number from the security database list of peer device. It will return the device bonded number immediately.

Return - >= 0 : bonded devices number.
- ESP_FAIL : failed

esp_err_t **esp_ble_get_bond_device_list** (int **dev_num*, *esp_ble_bond_dev_t* **dev_list*)

Get the device from the security database list of peer device. It will return the device bonded information immediately.

Return - ESP_OK : success
- other : failed

Parameters
- `[inout] dev_num`: Indicate the dev_list array(buffer) size as input. If dev_num is large enough, it means the actual number as output. Suggest that dev_num value equal to esp_ble_get_bond_device_num().
- `[out] dev_list`: an array(buffer) of *esp_ble_bond_dev_t* type. Use for storing the bonded devices address. The dev_list should be allocated by who call this API.

esp_err_t **esp_ble_oob_req_reply** (*esp_bd_addr_t bd_addr*, uint8_t **TK*, uint8_t *len*)

This function is called to provide the OOB data for SMP in response to ESP_GAP_BLE_OOB_REQ_EVT.

Return - ESP_OK : success
- other : failed

Parameters
- `[in] bd_addr`: BD address of the peer device.
- `[in] TK`: TK value, the TK value shall be a 128-bit random number
- `[in] len`: length of tk, should always be 128-bit

esp_err_t **esp_ble_gap_disconnect** (*esp_bd_addr_t remote_device*)

This function is to disconnect the physical connection of the peer device gattc may have multiple virtual GATT server connections when multiple app_id registered. esp_ble_gattc_close (esp_gatt_if_t gattc_if, uint16_t conn_id) only close one virtual GATT server connection. if there exist other virtual GATT server connections, it does not disconnect the physical connection. esp_ble_gap_disconnect(esp_bd_addr_t remote_device) disconnect the physical connection directly.

Return - ESP_OK : success
- other : failed

Parameters
- `[in] remote_device`: : BD address of the peer device

esp_err_t **esp_ble_get_current_conn_params** (*esp_bd_addr_t bd_addr*, *esp_gap_conn_params_t *conn_params*)

This function is called to read the connection parameters information of the device.

Return - ESP_OK : success
- other : failed

Parameters
- `[in] bd_addr`: BD address of the peer device.
- `[out] conn_params`: the connection parameters information

esp_err_t **esp_gap_ble_set_channels** (*esp_gap_ble_channels channels*)

BLE set channels.

Return - ESP_OK : success
- ESP_ERR_INVALID_STATE: if bluetooth stack is not yet enabled
- other : failed

Parameters
- `[in] channels`: : The n th such field (in the range 0 to 36) contains the value for the link layer channel index n. 0 means channel n is bad. 1 means channel n is unknown. The most significant bits are reserved and shall be set to 0. At least one channel shall be marked as unknown.

esp_err_t **esp_gap_ble_set_authorization** (*esp_bd_addr_t bd_addr*, bool *authorize*)

This function is called to authorized a link after Authentication(MITM protection)

Return - ESP_OK : success
- other : failed

Parameters
- `[in] bd_addr`: BD address of the peer device.
- `[out] authorize`: Authorized the link or not.

esp_err_t **esp_ble_gap_read_phy** (*esp_bd_addr_t bd_addr*)

This function is used to read the current transmitter PHY and receiver PHY on the connection identified by remote address.

Return - ESP_OK : success
- other : failed

Parameters
- `[in] bd_addr`: : BD address of the peer device

esp_err_t **esp_ble_gap_set_prefered_default_phy** (*esp_ble_gap_phy_mask_t tx_phy_mask*, *esp_ble_gap_phy_mask_t rx_phy_mask*)

This function is used to allows the Host to specify its preferred values for the transmitter PHY and receiver PHY to be used for all subsequent connections over the LE transport.

Return - ESP_OK : success
- other : failed

Parameters
- `[in] tx_phy_mask`: : indicates the transmitter PHYs that the Host prefers the Controller to use
- `[in] rx_phy_mask`: : indicates the receiver PHYs that the Host prefers the Controller to use

esp_err_t **esp_ble_gap_set_prefered_phy**(*esp_bd_addr_t bd_addr*, *esp_ble_gap_all_phys_t all_phys_mask*, *esp_ble_gap_phy_mask_t tx_phy_mask*, *esp_ble_gap_phy_mask_t rx_phy_mask*, *esp_ble_gap_prefer_phy_options_t phy_options*)

This function is used to set the PHY preferences for the connection identified by the remote address. The Controller might not be able to make the change (e.g. because the peer does not support the requested PHY) or may decide that the current PHY is preferable.

Return - ESP_OK : success
- other : failed

Parameters
- `[in] bd_addr`: : remote address
- `[in] all_phys_mask`: : a bit field that allows the Host to specify
- `[in] tx_phy_mask`: : a bit field that indicates the transmitter PHYs that the Host prefers the Controller to use
- `[in] rx_phy_mask`: : a bit field that indicates the receiver PHYs that the Host prefers the Controller to use
- `[in] phy_options`: : a bit field that allows the Host to specify options for PHYs

esp_err_t **esp_ble_gap_ext_adv_set_rand_addr**(uint8_t *instance*, *esp_bd_addr_t rand_addr*)

This function is used by the Host to set the random device address specified by the Random_Address parameter.

Return - ESP_OK : success
- other : failed

Parameters
- `[in] instance`: : Used to identify an advertising set
- `[in] rand_addr`: : Random Device Address

esp_err_t **esp_ble_gap_ext_adv_set_params**(uint8_t *instance*, **const** *esp_ble_gap_ext_adv_params_t* **params*)

This function is used by the Host to set the advertising parameters.

Return - ESP_OK : success
- other : failed

Parameters
- `[in] instance`: : identifies the advertising set whose parameters are being configured.
- `[in] params`: : advertising parameters

esp_err_t **esp_ble_gap_config_ext_adv_data_raw**(uint8_t *instance*, uint16_t *length*, **const** uint8_t **data*)

This function is used to set the data used in advertising PDUs that have a data field.

Return - ESP_OK : success
- other : failed

Parameters
- `[in] instance`: : identifies the advertising set whose data are being configured
- `[in] length`: : data length
- `[in] data`: : data information

esp_err_t **esp_ble_gap_config_ext_scan_rsp_data_raw**(uint8_t *instance*, uint16_t *length*, **const** uint8_t **scan_rsp_data*)

This function is used to provide scan response data used in scanning response PDUs.

Return - ESP_OK : success
- other : failed

Parameters
- `[in] instance`: : identifies the advertising set whose response data are being configured.
- `[in] length`: : responsedata length
- `[in] scan_rsp_data`: : response data information

esp_err_t **esp_ble_gap_ext_adv_start**(uint8_t *num_adv*, **const** *esp_ble_gap_ext_adv_t* **ext_adv*)

This function is used to request the Controller to enable one or more advertising sets using the advertising sets identified by the instance parameter.

Return - ESP_OK : success
- other : failed

Parameters
- `[in] num_adv`: : Number of advertising sets to enable or disable
- `[in] ext_adv`: : adv parameters

esp_err_t **esp_ble_gap_ext_adv_stop**(uint8_t *num_adv*, **const** uint8_t **ext_adv_inst*)

This function is used to request the Controller to disable one or more advertising sets using the advertising sets identified by the instance parameter.

Return - ESP_OK : success
- other : failed

Parameters
- `[in] num_adv`: : Number of advertising sets to enable or disable
- `[in] ext_adv_inst`: : ext adv instance

esp_err_t **esp_ble_gap_ext_adv_set_remove**(uint8_t *instance*)

This function is used to remove an advertising set from the Controller.

Return - ESP_OK : success
- other : failed

Parameters
- `[in] instance`: : Used to identify an advertising set

esp_err_t **esp_ble_gap_ext_adv_set_clear**(void)

This function is used to remove all existing advertising sets from the Controller.

Return - ESP_OK : success
- other : failed

esp_err_t **esp_ble_gap_periodic_adv_set_params**(uint8_t *instance*, **const** *esp_ble_gap_periodic_adv_params_t* **params*)

This function is used by the Host to set the parameters for periodic advertising.

Return - ESP_OK : success
- other : failed

Parameters
- `[in] instance`: : identifies the advertising set whose periodic advertising parameters are being configured.
- `[in] params`: : periodic adv parameters

esp_err_t **esp_ble_gap_config_periodic_adv_data_raw**(uint8_t *instance*, uint16_t *length*, **const** uint8_t **data*)

This function is used to set the data used in periodic advertising PDUs.

Return - ESP_OK : success
- other : failed

Parameters
- `[in] instance`: : identifies the advertising set whose periodic advertising parameters are being configured.
- `[in] length`: : the length of periodic data
- `[in] data`: : periodic data information

esp_err_t **esp_ble_gap_periodic_adv_start**(uint8_t *instance*)

This function is used to request the Controller to enable the periodic advertising for the advertising set specified.

Return - ESP_OK : success
- other : failed

Parameters
- `[in] instance`: : Used to identify an advertising set

esp_err_t **esp_ble_gap_periodic_adv_stop**(uint8_t *instance*)

This function is used to request the Controller to disable the periodic advertising for the advertising set specified.

Return - ESP_OK : success
- other : failed

Parameters
- `[in] instance`: : Used to identify an advertising set

esp_err_t **esp_ble_gap_set_ext_scan_params**(**const** *esp_ble_ext_scan_params_t* **params*)
This function is used to set the extended scan parameters to be used on the advertising channels.

Return - ESP_OK : success
- other : failed

Parameters
- `[in] params`: : scan parameters

esp_err_t **esp_ble_gap_start_ext_scan**(uint32_t *duration*, uint16_t *period*)
This function is used to enable scanning.

Return - ESP_OK : success
- other : failed

Parameters
- `[in] duration`: : Scan duration
- `[in] period`: : Time interval from when the Controller started its last Scan Duration until it begins the subsequent Scan Duration.

esp_err_t **esp_ble_gap_stop_ext_scan**(void)
This function is used to disable scanning.

Return - ESP_OK : success
- other : failed

esp_err_t **esp_ble_gap_periodic_adv_create_sync**(**const** *esp_ble_gap_periodic_adv_sync_params_t* **params*)
This function is used to synchronize with periodic advertising from an advertiser and begin receiving periodic advertising packets.

Return - ESP_OK : success
- other : failed

Parameters
- `[in] params`: : sync parameters

esp_err_t **esp_ble_gap_periodic_adv_sync_cancel**(void)
This function is used to cancel the LE_Periodic_Advertising_Create_Sync command while it is pending.

Return - ESP_OK : success
- other : failed

esp_err_t **esp_ble_gap_periodic_adv_sync_terminate**(uint16_t *sync_handle*)
This function is used to stop reception of the periodic advertising identified by the Sync Handle parameter.

Return - ESP_OK : success
- other : failed

Parameters
- `[in] sync_handle`: : identify the periodic advertiser

esp_err_t **esp_ble_gap_periodic_adv_add_dev_to_list**(*esp_ble_addr_type_t* *addr_type*, *esp_bd_addr_t* *addr*, uint8_t *sid*)
This function is used to add a single device to the Periodic Advertiser list stored in the Controller.

Return - ESP_OK : success
- other : failed

Parameters
- `[in] addr_type`: : address type
- `[in] addr`: : Device Address
- `[in] sid`: : Advertising SID subfield in the ADI field used to identify the Periodic Advertising

esp_err_t **esp_ble_gap_periodic_adv_remove_dev_from_list**(*esp_ble_addr_type_t addr_type*, *esp_bd_addr_t addr*, uint8_t *sid*)

This function is used to remove one device from the list of Periodic Advertisers stored in the Controller. Removals from the Periodic Advertisers List take effect immediately.

Return - ESP_OK : success
- other : failed

Parameters
- `[in] addr_type`: : address type
- `[in] addr`: : Device Address
- `[in] sid`: : Advertising SID subfield in the ADI field used to identify the Periodic Advertising

esp_err_t **esp_ble_gap_periodic_adv_clear_dev**(void)

This function is used to remove all devices from the list of Periodic Advertisers in the Controller.

Return - ESP_OK : success
- other : failed

esp_err_t **esp_ble_gap_prefer_ext_connect_params_set**(*esp_bd_addr_t addr*, *esp_ble_gap_phy_mask_t phy_mask*, **const** *esp_ble_gap_conn_params_t* **phy_1m_conn_params*, **const** *esp_ble_gap_conn_params_t* **phy_2m_conn_params*, **const** *esp_ble_gap_conn_params_t* **phy_coded_conn_params*)

This function is used to set aux connection parameters.

Return - ESP_OK : success
- other : failed

Parameters
- `[in] addr`: : device address
- `[in] phy_mask`: : indicates the PHY(s) on which the advertising packets should be received on the primary advertising channel and the PHYs for which connection parameters have been specified.
- `[in] phy_1m_conn_params`: : Scan connectable advertisements on the LE 1M PHY. Connection parameters for the LE 1M PHY are provided.
- `[in] phy_2m_conn_params`: : Connection parameters for the LE 2M PHY are provided.
- `[in] phy_coded_conn_params`: : Scan connectable advertisements on the LE Coded PHY. Connection parameters for the LE Coded PHY are provided.

Unions

union esp_ble_key_value_t

#include <esp_gap_ble_api.h> union type of the security key value

Public Members

esp_ble_penc_keys_t **penc_key**

received peer encryption key

esp_ble_pcsrk_keys_t **pcsrk_key**

received peer device SRK

esp_ble_pid_keys_t **pid_key**

peer device ID key

esp_ble_lenc_keys_t **lenc_key**

local encryption reproduction keys LTK = = d1(ER,DIV,0)

esp_ble_lcsrk_keys **lcsrk_key**

local device CSRK = d1(ER,DIV,1)

union esp_ble_sec_t

#include <esp_gap_ble_api.h> union associated with ble security

Public Members

esp_ble_sec_key_notif_t **key_notif**
passkey notification

esp_ble_sec_req_t **ble_req**
BLE SMP related request

esp_ble_key_t **ble_key**
BLE SMP keys used when pairing

esp_ble_local_id_keys_t **ble_id_keys**
BLE IR event

esp_ble_auth_cmpl_t **auth_cmpl**
Authentication complete indication.

union esp_ble_gap_cb_param_t

#include <esp_gap_ble_api.h> Gap callback parameters union.

Public Members

struct *esp_ble_gap_cb_param_t*::*ble_get_dev_name_cmpl_evt_param* **get_dev_name_cmpl**
Event parameter of ESP_GAP_BLE_GET_DEV_NAME_COMPLETE_EVT

struct *esp_ble_gap_cb_param_t*::*ble_adv_data_cmpl_evt_param* **adv_data_cmpl**
Event parameter of ESP_GAP_BLE_ADV_DATA_SET_COMPLETE_EVT

struct *esp_ble_gap_cb_param_t*::*ble_scan_rsp_data_cmpl_evt_param* **scan_rsp_data_cmpl**
Event parameter of ESP_GAP_BLE_SCAN_RSP_DATA_SET_COMPLETE_EVT

struct *esp_ble_gap_cb_param_t*::*ble_scan_param_cmpl_evt_param* **scan_param_cmpl**
Event parameter of ESP_GAP_BLE_SCAN_PARAM_SET_COMPLETE_EVT

struct *esp_ble_gap_cb_param_t*::*ble_scan_result_evt_param* **scan_rst**
Event parameter of ESP_GAP_BLE_SCAN_RESULT_EVT

struct *esp_ble_gap_cb_param_t*::*ble_adv_data_raw_cmpl_evt_param* **adv_data_raw_cmpl**
Event parameter of ESP_GAP_BLE_ADV_DATA_RAW_SET_COMPLETE_EVT

struct *esp_ble_gap_cb_param_t*::*ble_scan_rsp_data_raw_cmpl_evt_param* **scan_rsp_data_raw_cmpl**
Event parameter of ESP_GAP_BLE_SCAN_RSP_DATA_RAW_SET_COMPLETE_EVT

struct *esp_ble_gap_cb_param_t*::*ble_adv_start_cmpl_evt_param* **adv_start_cmpl**
Event parameter of ESP_GAP_BLE_ADV_START_COMPLETE_EVT

struct *esp_ble_gap_cb_param_t*::*ble_scan_start_cmpl_evt_param* **scan_start_cmpl**
Event parameter of ESP_GAP_BLE_SCAN_START_COMPLETE_EVT

esp_ble_sec_t **ble_security**
ble gap security union type

struct *esp_ble_gap_cb_param_t*::*ble_scan_stop_cmpl_evt_param* **scan_stop_cmpl**
Event parameter of ESP_GAP_BLE_SCAN_STOP_COMPLETE_EVT

struct *esp_ble_gap_cb_param_t*::*ble_adv_stop_cmpl_evt_param* **adv_stop_cmpl**
Event parameter of ESP_GAP_BLE_ADV_STOP_COMPLETE_EVT

struct *esp_ble_gap_cb_param_t*::*ble_set_rand_cmpl_evt_param* **set_rand_addr_cmpl**
Event parameter of ESP_GAP_BLE_SET_STATIC_RAND_ADDR_EVT

struct *esp_ble_gap_cb_param_t*::*ble_update_conn_params_evt_param* **update_conn_params**
Event parameter of ESP_GAP_BLE_UPDATE_CONN_PARAMS_EVT

struct *esp_ble_gap_cb_param_t*::*ble_pkt_data_length_cmpl_evt_param* **pkt_data_lenth_cmpl**
Event parameter of ESP_GAP_BLE_SET_PKT_LENGTH_COMPLETE_EVT

struct *esp_ble_gap_cb_param_t*::*ble_local_privacy_cmpl_evt_param* **local_privacy_cmpl**
Event parameter of ESP_GAP_BLE_SET_LOCAL_PRIVACY_COMPLETE_EVT

struct *esp_ble_gap_cb_param_t*::*ble_remove_bond_dev_cmpl_evt_param* **remove_bond_dev_cmpl**
Event parameter of ESP_GAP_BLE_REMOVE_BOND_DEV_COMPLETE_EVT

struct *esp_ble_gap_cb_param_t*::*ble_clear_bond_dev_cmpl_evt_param* **clear_bond_dev_cmpl**
Event parameter of ESP_GAP_BLE_CLEAR_BOND_DEV_COMPLETE_EVT

struct *esp_ble_gap_cb_param_t*::*ble_get_bond_dev_cmpl_evt_param* **get_bond_dev_cmpl**
Event parameter of ESP_GAP_BLE_GET_BOND_DEV_COMPLETE_EVT

struct *esp_ble_gap_cb_param_t*::*ble_read_rssi_cmpl_evt_param* **read_rssi_cmpl**
Event parameter of ESP_GAP_BLE_READ_RSSI_COMPLETE_EVT

struct *esp_ble_gap_cb_param_t*::*ble_update_whitelist_cmpl_evt_param* **update_whitelist_cmpl**
Event parameter of ESP_GAP_BLE_UPDATE_WHITELIST_COMPLETE_EVT

struct *esp_ble_gap_cb_param_t*::*ble_update_duplicate_exceptional_list_cmpl_evt_param* **update_duplicate_excepti**
Event parameter of ESP_GAP_BLE_UPDATE_DUPLICATE_EXCEPTIONAL_LIST_COMPLETE_EVT

struct *esp_ble_gap_cb_param_t*::*ble_set_channels_evt_param* **ble_set_channels**
Event parameter of ESP_GAP_BLE_SET_CHANNELS_EVT

struct *esp_ble_gap_cb_param_t*::*ble_read_phy_cmpl_evt_param* **read_phy**
Event parameter of ESP_GAP_BLE_READ_PHY_COMPLETE_EVT

struct *esp_ble_gap_cb_param_t*::*ble_set_perf_def_phy_cmpl_evt_param* **set_perf_def_phy**
Event parameter of ESP_GAP_BLE_SET_PREFERED_DEFAULT_PHY_COMPLETE_EVT

struct *esp_ble_gap_cb_param_t*::*ble_set_perf_phy_cmpl_evt_param* **set_perf_phy**
Event parameter of ESP_GAP_BLE_SET_PREFERED_PHY_COMPLETE_EVT

struct *esp_ble_gap_cb_param_t*::*ble_ext_adv_set_rand_addr_cmpl_evt_param* **ext_adv_set_rand_addr**
Event parameter of ESP_GAP_BLE_EXT_ADV_SET_RAND_ADDR_COMPLETE_EVT

struct *esp_ble_gap_cb_param_t*::*ble_ext_adv_set_params_cmpl_evt_param* **ext_adv_set_params**
Event parameter of ESP_GAP_BLE_EXT_ADV_SET_PARAMS_COMPLETE_EVT

struct *esp_ble_gap_cb_param_t*::*ble_ext_adv_data_set_cmpl_evt_param* **ext_adv_data_set**
Event parameter of ESP_GAP_BLE_EXT_ADV_DATA_SET_COMPLETE_EVT

struct *esp_ble_gap_cb_param_t*::*ble_ext_adv_scan_rsp_set_cmpl_evt_param* **scan_rsp_set**
Event parameter of ESP_GAP_BLE_EXT_SCAN_RSP_DATA_SET_COMPLETE_EVT

struct *esp_ble_gap_cb_param_t*::*ble_ext_adv_start_cmpl_evt_param* **ext_adv_start**
Event parameter of ESP_GAP_BLE_EXT_ADV_START_COMPLETE_EVT

struct *esp_ble_gap_cb_param_t*::*ble_ext_adv_stop_cmpl_evt_param* **ext_adv_stop**
Event parameter of ESP_GAP_BLE_EXT_ADV_STOP_COMPLETE_EVT

struct *esp_ble_gap_cb_param_t*::*ble_ext_adv_set_remove_cmpl_evt_param* **ext_adv_remove**
Event parameter of ESP_GAP_BLE_EXT_ADV_SET_REMOVE_COMPLETE_EVT

struct *esp_ble_gap_cb_param_t*::*ble_ext_adv_set_clear_cmpl_evt_param* **ext_adv_clear**
Event parameter of ESP_GAP_BLE_EXT_ADV_SET_CLEAR_COMPLETE_EVT

struct *esp_ble_gap_cb_param_t*::*ble_periodic_adv_set_params_cmpl_param* **peroid_adv_set_params**
Event parameter of ESP_GAP_BLE_PERIODIC_ADV_SET_PARAMS_COMPLETE_EVT

struct *esp_ble_gap_cb_param_t*::*ble_periodic_adv_data_set_cmpl_param* **period_adv_data_set**
Event parameter of ESP_GAP_BLE_PERIODIC_ADV_DATA_SET_COMPLETE_EVT

struct *esp_ble_gap_cb_param_t*::*ble_periodic_adv_start_cmpl_param* **period_adv_start**
Event parameter of ESP_GAP_BLE_PERIODIC_ADV_START_COMPLETE_EVT

struct *esp_ble_gap_cb_param_t*::*ble_periodic_adv_stop_cmpl_param* **period_adv_stop**
Event parameter of ESP_GAP_BLE_PERIODIC_ADV_STOP_COMPLETE_EVT

struct *esp_ble_gap_cb_param_t*::*ble_period_adv_create_sync_cmpl_param* **period_adv_create_sync**
Event parameter of ESP_GAP_BLE_PERIODIC_ADV_CREATE_SYNC_COMPLETE_EVT

struct *esp_ble_gap_cb_param_t*::*ble_period_adv_sync_cancel_cmpl_param* **period_adv_sync_cancel**
Event parameter of ESP_GAP_BLE_PERIODIC_ADV_SYNC_CANCEL_COMPLETE_EVT

struct *esp_ble_gap_cb_param_t*::*ble_period_adv_sync_terminate_cmpl_param* **period_adv_sync_term**
Event parameter of ESP_GAP_BLE_PERIODIC_ADV_SYNC_TERMINATE_COMPLETE_EVT

struct *esp_ble_gap_cb_param_t*::*ble_period_adv_add_dev_cmpl_param* **period_adv_add_dev**
Event parameter of ESP_GAP_BLE_PERIODIC_ADV_ADD_DEV_COMPLETE_EVT

struct *esp_ble_gap_cb_param_t*::*ble_period_adv_remove_dev_cmpl_param* **period_adv_remove_dev**
Event parameter of ESP_GAP_BLE_PERIODIC_ADV_REMOVE_DEV_COMPLETE_EVT

struct *esp_ble_gap_cb_param_t*::*ble_period_adv_clear_dev_cmpl_param* **period_adv_clear_dev**
Event parameter of ESP_GAP_BLE_PERIODIC_ADV_CLEAR_DEV_COMPLETE_EVT

struct *esp_ble_gap_cb_param_t*::*ble_set_ext_scan_params_cmpl_param* **set_ext_scan_params**
Event parameter of ESP_GAP_BLE_SET_EXT_SCAN_PARAMS_COMPLETE_EVT

struct *esp_ble_gap_cb_param_t*::*ble_ext_scan_start_cmpl_param* **ext_scan_start**
Event parameter of ESP_GAP_BLE_EXT_SCAN_START_COMPLETE_EVT

struct *esp_ble_gap_cb_param_t*::*ble_ext_scan_stop_cmpl_param* **ext_scan_stop**
Event parameter of ESP_GAP_BLE_EXT_SCAN_STOP_COMPLETE_EVT

struct *esp_ble_gap_cb_param_t*::*ble_ext_conn_params_set_cmpl_param* **ext_conn_params_set**
Event parameter of ESP_GAP_BLE_PREFER_EXT_CONN_PARAMS_SET_COMPLETE_EVT

struct *esp_ble_gap_cb_param_t*::*ble_adv_terminate_param* **adv_terminate**
Event parameter of ESP_GAP_BLE_ADV_TERMINATED_EVT

struct *esp_ble_gap_cb_param_t*::*ble_scan_req_received_param* **scan_req_received**
Event parameter of ESP_GAP_BLE_SCAN_REQ_RECEIVED_EVT

struct *esp_ble_gap_cb_param_t*::*ble_channel_sel_alg_param* **channel_sel_alg**
Event parameter of ESP_GAP_BLE_CHANNEL_SELETE_ALGORITHM_EVT

struct *esp_ble_gap_cb_param_t*::*ble_periodic_adv_sync_lost_param* **periodic_adv_sync_lost**
Event parameter of ESP_GAP_BLE_PERIODIC_ADV_SYNC_LOST_EVT

struct *esp_ble_gap_cb_param_t*::*ble_periodic_adv_sync_estab_param* **periodic_adv_sync_estab**
Event parameter of ESP_GAP_BLE_PERIODIC_ADV_SYNC_ESTAB_EVT

struct *esp_ble_gap_cb_param_t*::*ble_phy_update_cmpl_param* **phy_update**
Event parameter of ESP_GAP_BLE_PHY_UPDATE_COMPLETE_EVT

struct *esp_ble_gap_cb_param_t*::*ble_ext_adv_report_param* **ext_adv_report**
Event parameter of ESP_GAP_BLE_EXT_ADV_REPORT_EVT

struct *esp_ble_gap_cb_param_t*::*ble_periodic_adv_report_param* **period_adv_report**
Event parameter of ESP_GAP_BLE_PERIODIC_ADV_REPORT_EVT

struct ble_adv_data_cmpl_evt_param
#include <esp_gap_ble_api.h> ESP_GAP_BLE_ADV_DATA_SET_COMPLETE_EVT.

Public Members

esp_bt_status_t **status**
Indicate the set advertising data operation success status

struct ble_adv_data_raw_cmpl_evt_param
#include <esp_gap_ble_api.h> ESP_GAP_BLE_ADV_DATA_RAW_SET_COMPLETE_EVT.

Public Members

esp_bt_status_t **status**
Indicate the set raw advertising data operation success status

struct ble_adv_start_cmpl_evt_param
#include <esp_gap_ble_api.h> ESP_GAP_BLE_ADV_START_COMPLETE_EVT.

Public Members

esp_bt_status_t **status**
Indicate advertising start operation success status

struct ble_adv_stop_cmpl_evt_param
#include <esp_gap_ble_api.h> ESP_GAP_BLE_ADV_STOP_COMPLETE_EVT.

Public Members

esp_bt_status_t **status**
Indicate adv stop operation success status

struct ble_adv_terminate_param
#include <esp_gap_ble_api.h> ESP_GAP_BLE_ADV_TERMINATED_EVT.

Public Members

uint8_t **status**
Indicate adv terminate status

uint8_t **adv_instance**
extend advertising handle

uint16_t **conn_idx**
connection index

uint8_t **completed_event**
the number of completed extend advertising events

struct ble_channel_sel_alg_param
#include <esp_gap_ble_api.h> ESP_GAP_BLE_CHANNEL_SELETE_ALGORITHM_EVT.

Public Members

uint16_t **conn_handle**
connection handle

uint8_t **channel_sel_alg**
channel selection algorithm

struct ble_clear_bond_dev_cmpl_evt_param
#include <esp_gap_ble_api.h> ESP_GAP_BLE_CLEAR_BOND_DEV_COMPLETE_EVT.

Public Members

esp_bt_status_t **status**
Indicate the clear bond device operation success status

struct ble_ext_adv_data_set_cmpl_evt_param

#include <esp_gap_ble_api.h> ESP_GAP_BLE_EXT_ADV_DATA_SET_COMPLETE_EVT.

Public Members

esp_bt_status_t **status**

Indicate extend advertising data set status

struct ble_ext_adv_report_param

#include <esp_gap_ble_api.h> ESP_GAP_BLE_EXT_ADV_REPORT_EVT.

Public Members

esp_ble_gap_ext_adv_reprot_t **params**

extend advertising report parameters

struct ble_ext_adv_scan_rsp_set_cmpl_evt_param

#include <esp_gap_ble_api.h> ESP_GAP_BLE_EXT_SCAN_RSP_DATA_SET_COMPLETE_EVT.

Public Members

esp_bt_status_t **status**

Indicate extend advertising sacn response data set status

struct ble_ext_adv_set_clear_cmpl_evt_param

#include <esp_gap_ble_api.h> ESP_GAP_BLE_EXT_ADV_SET_CLEAR_COMPLETE_EVT.

Public Members

esp_bt_status_t **status**

Indicate advertising stop operation success status

struct ble_ext_adv_set_params_cmpl_evt_param

#include <esp_gap_ble_api.h> ESP_GAP_BLE_EXT_ADV_SET_PARAMS_COMPLETE_EVT.

Public Members

esp_bt_status_t **status**

Indicate extend advertising parameters set status

struct ble_ext_adv_set_rand_addr_cmpl_evt_param

#include <esp_gap_ble_api.h> ESP_GAP_BLE_EXT_ADV_SET_RAND_ADDR_COMPLETE_EVT.

Public Members

esp_bt_status_t **status**

Indicate extend advertising random address set status

struct ble_ext_adv_set_remove_cmpl_evt_param

#include <esp_gap_ble_api.h> ESP_GAP_BLE_EXT_ADV_SET_REMOVE_COMPLETE_EVT.

Public Members

esp_bt_status_t **status**
Indicate advertising stop operation success status

struct ble_ext_adv_start_cmpl_evt_param
#include <esp_gap_ble_api.h> ESP_GAP_BLE_EXT_ADV_START_COMPLETE_EVT.

Public Members

esp_bt_status_t **status**
Indicate advertising start operation success status

struct ble_ext_adv_stop_cmpl_evt_param
#include <esp_gap_ble_api.h> ESP_GAP_BLE_EXT_ADV_STOP_COMPLETE_EVT.

Public Members

esp_bt_status_t **status**
Indicate advertising stop operation success status

struct ble_ext_conn_params_set_cmpl_param
#include <esp_gap_ble_api.h> ESP_GAP_BLE_PREFER_EXT_CONN_PARAMS_SET_COMPLETE_EVT.

Public Members

esp_bt_status_t **status**
Indicate extend connection parameters set status

struct ble_ext_scan_start_cmpl_param
#include <esp_gap_ble_api.h> ESP_GAP_BLE_EXT_SCAN_START_COMPLETE_EVT.

Public Members

esp_bt_status_t **status**
Indicate extend advertising start status

struct ble_ext_scan_stop_cmpl_param
#include <esp_gap_ble_api.h> ESP_GAP_BLE_EXT_SCAN_STOP_COMPLETE_EVT.

Public Members

esp_bt_status_t **status**
Indicate extend advertising stop status

struct ble_get_bond_dev_cmpl_evt_param
#include <esp_gap_ble_api.h> ESP_GAP_BLE_GET_BOND_DEV_COMPLETE_EVT.

Public Members

esp_bt_status_t **status**
Indicate the get bond device operation success status

uint8_t **dev_num**
Indicate the get number device in the bond list

esp_ble_bond_dev_t ***bond_dev**
the pointer to the bond device Structure

struct ble_get_dev_name_cmpl_evt_param
#include <esp_gap_ble_api.h> ESP_GAP_BLE_GET_DEV_NAME_COMPLETE_EVT.

Public Members

esp_bt_status_t **status**
Indicate the get device name success status

char ***name**
Name of bluetooth device

struct ble_local_privacy_cmpl_evt_param
#include <esp_gap_ble_api.h> ESP_GAP_BLE_SET_LOCAL_PRIVACY_COMPLETE_EVT.

Public Members

esp_bt_status_t **status**
Indicate the set local privacy operation success status

struct ble_period_adv_add_dev_cmpl_param
#include <esp_gap_ble_api.h> ESP_GAP_BLE_PERIODIC_ADV_ADD_DEV_COMPLETE_EVT.

Public Members

esp_bt_status_t **status**
Indicate periodic advertising device list add status

struct ble_period_adv_clear_dev_cmpl_param
#include <esp_gap_ble_api.h> ESP_GAP_BLE_PERIODIC_ADV_CLEAR_DEV_COMPLETE_EVT.

Public Members

esp_bt_status_t **status**
Indicate periodic advertising device list clean status

struct ble_period_adv_create_sync_cmpl_param
#include <esp_gap_ble_api.h> ESP_GAP_BLE_PERIODIC_ADV_CREATE_SYNC_COMPLETE_EVT.

Public Members

esp_bt_status_t **status**
Indicate periodic advertising create sync status

struct ble_period_adv_remove_dev_cmpl_param
#include <esp_gap_ble_api.h> ESP_GAP_BLE_PERIODIC_ADV_REMOVE_DEV_COMPLETE_EVT.

Public Members

esp_bt_status_t **status**
Indicate periodic advertising device list remove status

struct ble_period_adv_sync_cancel_cmpl_param
#include <esp_gap_ble_api.h> ESP_GAP_BLE_PERIODIC_ADV_SYNC_CANCEL_COMPLETE_EVT.

Public Members

esp_bt_status_t **status**
Indicate periodic advertising sync cancle status

struct ble_period_adv_sync_terminate_cmpl_param
#include <esp_gap_ble_api.h> ESP_GAP_BLE_PERIODIC_ADV_SYNC_TERMINATE_COMPLETE_EVT.

Public Members

esp_bt_status_t **status**
Indicate periodic advertising sync terminate status

struct ble_periodic_adv_data_set_cmpl_param
#include <esp_gap_ble_api.h> ESP_GAP_BLE_PERIODIC_ADV_DATA_SET_COMPLETE_EVT.

Public Members

esp_bt_status_t **status**
Indicate periodic advertising data set status

struct ble_periodic_adv_report_param
#include <esp_gap_ble_api.h> ESP_GAP_BLE_PERIODIC_ADV_REPORT_EVT.

Public Members

esp_ble_gap_periodic_adv_report_t **params**
periodic advertising report parameters

struct ble_periodic_adv_set_params_cmpl_param
#include <esp_gap_ble_api.h> ESP_GAP_BLE_PERIODIC_ADV_SET_PARAMS_COMPLETE_EVT.

Public Members

esp_bt_status_t **status**
Indicate periodic advertisingparameters set status

struct ble_periodic_adv_start_cmpl_param
#include <esp_gap_ble_api.h> ESP_GAP_BLE_PERIODIC_ADV_START_COMPLETE_EVT.

Public Members

esp_bt_status_t **status**
Indicate periodic advertising start status

struct ble_periodic_adv_stop_cmpl_param
#include <esp_gap_ble_api.h> ESP_GAP_BLE_PERIODIC_ADV_STOP_COMPLETE_EVT.

Public Members

esp_bt_status_t **status**
Indicate periodic advertising stop status

struct ble_periodic_adv_sync_estab_param
#include <esp_gap_ble_api.h> ESP_GAP_BLE_PERIODIC_ADV_SYNC_ESTAB_EVT.

Public Members

uint8_t **status**
periodic advertising sync status

uint16_t **sync_handle**
periodic advertising sync handle

uint8_t **sid**
periodic advertising sid

esp_ble_addr_type_t **adv_addr_type**
periodic advertising address type

esp_bd_addr_t **adv_addr**
periodic advertising address

esp_ble_gap_phy_t **adv_phy**
periodic advertising phy type

uint16_t **period_adv_interval**
periodic advertising interval

uint8_t **adv_clk_accuracy**
periodic advertising clock accuracy

struct ble_periodic_adv_sync_lost_param
#include <esp_gap_ble_api.h> ESP_GAP_BLE_PERIODIC_ADV_SYNC_LOST_EVT.

Public Members

uint16_t **sync_handle**
sync handle

struct ble_phy_update_cmpl_param
#include <esp_gap_ble_api.h> ESP_GAP_BLE_PHY_UPDATE_COMPLETE_EVT.

Public Members

esp_bt_status_t **status**
phy update status

esp_bd_addr_t **bda**
address

esp_ble_gap_phy_t **tx_phy**
tx phy type

esp_ble_gap_phy_t **rx_phy**
rx phy type

struct ble_pkt_data_length_cmpl_evt_param
#include <esp_gap_ble_api.h> ESP_GAP_BLE_SET_PKT_LENGTH_COMPLETE_EVT.

Public Members

esp_bt_status_t **status**
Indicate the set pkt data length operation success status

esp_ble_pkt_data_length_params_t **params**
pkt data length value

struct ble_read_phy_cmpl_evt_param

#include <esp_gap_ble_api.h> ESP_GAP_BLE_READ_PHY_COMPLETE_EVT.

Public Members

esp_bt_status_t **status**
read phy complete status

esp_bd_addr_t **bda**
read phy address

esp_ble_gap_phy_t **tx_phy**
tx phy type

esp_ble_gap_phy_t **rx_phy**
rx phy type

struct ble_read_rssi_cmpl_evt_param

#include <esp_gap_ble_api.h> ESP_GAP_BLE_READ_RSSI_COMPLETE_EVT.

Public Members

esp_bt_status_t **status**
Indicate the read adv tx power operation success status

int8_t **rssi**
The ble remote device rssi value, the range is from -127 to 20, the unit is dbm, if the RSSI cannot be read, the RSSI metric shall be set to 127.

esp_bd_addr_t **remote_addr**
The remote device address

struct ble_remove_bond_dev_cmpl_evt_param

#include <esp_gap_ble_api.h> ESP_GAP_BLE_REMOVE_BOND_DEV_COMPLETE_EVT.

Public Members

esp_bt_status_t **status**
Indicate the remove bond device operation success status

esp_bd_addr_t **bd_addr**
The device address which has been remove from the bond list

struct ble_scan_param_cmpl_evt_param

#include <esp_gap_ble_api.h> ESP_GAP_BLE_SCAN_PARAM_SET_COMPLETE_EVT.

Public Members

esp_bt_status_t **status**
Indicate the set scan param operation success status

struct ble_scan_req_received_param

#include <esp_gap_ble_api.h> ESP_GAP_BLE_SCAN_REQ_RECEIVED_EVT.

Public Members

uint8_t **adv_instance**
extend advertising handle

esp_ble_addr_type_t **scan_addr_type**
scanner address type

esp_bd_addr_t **scan_addr**
scanner address

struct ble_scan_result_evt_param
#include <esp_gap_ble_api.h> ESP_GAP_BLE_SCAN_RESULT_EVT.

Public Members

esp_gap_search_evt_t **search_evt**
Search event type

esp_bd_addr_t **bda**
Bluetooth device address which has been searched

esp_bt_dev_type_t **dev_type**
Device type

esp_ble_addr_type_t **ble_addr_type**
Ble device address type

esp_ble_evt_type_t **ble_evt_type**
Ble scan result event type

int **rssi**
Searched device's RSSI

uint8_t **ble_adv**[**ESP_BLE_ADV_DATA_LEN_MAX** + **ESP_BLE_SCAN_RSP_DATA_LEN_MAX**]
Received EIR

int **flag**
Advertising data flag bit

int **num_resps**
Scan result number

uint8_t **adv_data_len**
Adv data length

uint8_t **scan_rsp_len**
Scan response length

uint32_t **num_dis**
The number of discard packets

struct ble_scan_rsp_data_cmpl_evt_param
#include <esp_gap_ble_api.h> ESP_GAP_BLE_SCAN_RSP_DATA_SET_COMPLETE_EVT.

Public Members

esp_bt_status_t **status**
Indicate the set scan response data operation success status

struct ble_scan_rsp_data_raw_cmpl_evt_param
#include <esp_gap_ble_api.h> ESP_GAP_BLE_SCAN_RSP_DATA_RAW_SET_COMPLETE_EVT.

Public Members

esp_bt_status_t **status**
Indicate the set raw advertising data operation success status

struct ble_scan_start_cmpl_evt_param
#include <esp_gap_ble_api.h> ESP_GAP_BLE_SCAN_START_COMPLETE_EVT.

Public Members

esp_bt_status_t **status**
Indicate scan start operation success status

struct ble_scan_stop_cmpl_evt_param
#include <esp_gap_ble_api.h> ESP_GAP_BLE_SCAN_STOP_COMPLETE_EVT.

Public Members

esp_bt_status_t **status**
Indicate scan stop operation success status

struct ble_set_channels_evt_param
#include <esp_gap_ble_api.h> ESP_GAP_BLE_SET_CHANNELS_EVT.

Public Members

esp_bt_status_t **stat**
BLE set channel status

struct ble_set_ext_scan_params_cmpl_param
#include <esp_gap_ble_api.h> ESP_GAP_BLE_SET_EXT_SCAN_PARAMS_COMPLETE_EVT.

Public Members

esp_bt_status_t **status**
Indicate extend advertising parameters set status

struct ble_set_perf_def_phy_cmpl_evt_param
#include <esp_gap_ble_api.h> ESP_GAP_BLE_SET_PREFERED_DEFAULT_PHY_COMPLETE_EVT.

Public Members

esp_bt_status_t **status**
Indicate perf default phy set status

struct ble_set_perf_phy_cmpl_evt_param
#include <esp_gap_ble_api.h> ESP_GAP_BLE_SET_PREFERED_PHY_COMPLETE_EVT.

Public Members

esp_bt_status_t **status**
Indicate perf phy set status

struct ble_set_rand_cmpl_evt_param
#include <esp_gap_ble_api.h> ESP_GAP_BLE_SET_STATIC_RAND_ADDR_EVT.

Public Members

esp_bt_status_t **status**
Indicate set static rand address operation success status

struct ble_update_conn_params_evt_param
#include <esp_gap_ble_api.h> ESP_GAP_BLE_UPDATE_CONN_PARAMS_EVT.

Public Members

esp_bt_status_t **status**
Indicate update connection parameters success status

esp_bd_addr_t **bda**
Bluetooth device address

uint16_t **min_int**
Min connection interval

uint16_t **max_int**
Max connection interval

uint16_t **latency**
Slave latency for the connection in number of connection events. Range: 0x0000 to 0x01F3

uint16_t **conn_int**
Current connection interval

uint16_t **timeout**
Supervision timeout for the LE Link. Range: 0x000A to 0x0C80. Mandatory Range: 0x000A to 0x0C80 Time = N * 10 msec

struct ble_update_duplicate_exceptional_list_cmpl_evt_param
#include <esp_gap_ble_api.h> ESP_GAP_BLE_UPDATE_DUPLICATE_EXCEPTIONAL_LIST_COMPLETE_EVT.

Public Members

esp_bt_status_t **status**
Indicate update duplicate scan exceptional list operation success status

uint8_t **subcode**
Define in esp_bt_duplicate_exceptional_subcode_type_t

uint16_t **length**
The length of device_info

esp_duplicate_info_t **device_info**
device information, when subcode is ESP_BLE_DUPLICATE_EXCEPTIONAL_LIST_CLEAN, the value is invalid

struct ble_update_whitelist_cmpl_evt_param
#include <esp_gap_ble_api.h> ESP_GAP_BLE_UPDATE_WHITELIST_COMPLETE_EVT.

Public Members

esp_bt_status_t **status**
Indicate the add or remove whitelist operation success status

esp_ble_wl_opration_t **wl_opration**
The value is ESP_BLE_WHITELIST_ADD if add address to whitelist operation success, ESP_BLE_WHITELIST_REMOVE if remove address from the whitelist operation success

Structures

struct esp_ble_adv_params_t

Advertising parameters.

Public Members

uint16_t **adv_int_min**

Minimum advertising interval for undirected and low duty cycle directed advertising. Range: 0x0020 to 0x4000 Default: N = 0x0800 (1.28 second) Time = N * 0.625 msec Time Range: 20 ms to 10.24 sec

uint16_t **adv_int_max**

Maximum advertising interval for undirected and low duty cycle directed advertising. Range: 0x0020 to 0x4000 Default: N = 0x0800 (1.28 second) Time = N * 0.625 msec Time Range: 20 ms to 10.24 sec Advertising max interval

esp_ble_adv_type_t **adv_type**

Advertising type

esp_ble_addr_type_t **own_addr_type**

Owner bluetooth device address type

esp_bd_addr_t **peer_addr**

Peer device bluetooth device address

esp_ble_addr_type_t **peer_addr_type**

Peer device bluetooth device address type, only support public address type and random address type

esp_ble_adv_channel_t **channel_map**

Advertising channel map

esp_ble_adv_filter_t **adv_filter_policy**

Advertising filter policy

struct esp_ble_adv_data_t

Advertising data content, according to "Supplement to the Bluetooth Core Specification".

Public Members

bool **set_scan_rsp**

Set this advertising data as scan response or not

bool **include_name**

Advertising data include device name or not

bool **include_txpower**

Advertising data include TX power

int **min_interval**

Advertising data show slave preferred connection min interval. The connection interval in the following manner: connIntervalmin = Conn_Interval_Min * 1.25 ms Conn_Interval_Min range: 0x0006 to 0x0C80 Value of 0xFFFF indicates no specific minimum. Values not defined above are reserved for future use.

int **max_interval**

Advertising data show slave preferred connection max interval. The connection interval in the following manner: connIntervalmax = Conn_Interval_Max * 1.25 ms Conn_Interval_Max range: 0x0006 to 0x0C80 Conn_Interval_Max shall be equal to or greater than the Conn_Interval_Min. Value of 0xFFFF indicates no specific maximum. Values not defined above are reserved for future use.

int **appearance**

External appearance of device

uint16_t **manufacturer_len**

Manufacturer data length

uint8_t ***p_manufacturer_data**
Manufacturer data point

uint16_t **service_data_len**
Service data length

uint8_t ***p_service_data**
Service data point

uint16_t **service_uuid_len**
Service uuid length

uint8_t ***p_service_uuid**
Service uuid array point

uint8_t **flag**
Advertising flag of discovery mode, see BLE_ADV_DATA_FLAG detail

struct esp_ble_scan_params_t
Ble scan parameters.

Public Members

esp_ble_scan_type_t **scan_type**
Scan type

esp_ble_addr_type_t **own_addr_type**
Owner address type

esp_ble_scan_filter_t **scan_filter_policy**
Scan filter policy

uint16_t **scan_interval**
Scan interval. This is defined as the time interval from when the Controller started its last LE scan until it begins the subsequent LE scan. Range: 0x0004 to 0x4000 Default: 0x0010 (10 ms) Time = N * 0.625 msec Time Range: 2.5 msec to 10.24 seconds

uint16_t **scan_window**
Scan window. The duration of the LE scan. LE_Scan_Window shall be less than or equal to LE_Scan_Interval Range: 0x0004 to 0x4000 Default: 0x0010 (10 ms) Time = N * 0.625 msec Time Range: 2.5 msec to 10240 msec

esp_ble_scan_duplicate_t **scan_duplicate**
The Scan_Duplicates parameter controls whether the Link Layer should filter out duplicate advertising reports (BLE_SCAN_DUPLICATE_ENABLE) to the Host, or if the Link Layer should generate advertising reports for each packet received

struct esp_gap_conn_params_t
connection parameters information

Public Members

uint16_t **interval**
connection interval

uint16_t **latency**
Slave latency for the connection in number of connection events. Range: 0x0000 to 0x01F3

uint16_t **timeout**
Supervision timeout for the LE Link. Range: 0x000A to 0x0C80. Mandatory Range: 0x000A to 0x0C80 Time = N * 10 msec Time Range: 100 msec to 32 seconds

struct esp_ble_conn_update_params_t
Connection update parameters.

Public Members

esp_bd_addr_t **bda**
Bluetooth device address

uint16_t **min_int**
Min connection interval

uint16_t **max_int**
Max connection interval

uint16_t **latency**
Slave latency for the connection in number of connection events. Range: 0x0000 to 0x01F3

uint16_t **timeout**
Supervision timeout for the LE Link. Range: 0x000A to 0x0C80. Mandatory Range: 0x000A to 0x0C80 Time = N * 10 msec Time Range: 100 msec to 32 seconds

struct esp_ble_pkt_data_length_params_t
BLE pkt date length keys.

Public Members

uint16_t **rx_len**
pkt rx data length value

uint16_t **tx_len**
pkt tx data length value

struct esp_ble_penc_keys_t
BLE encryption keys.

Public Members

esp_bt_octet16_t **ltk**
The long term key

esp_bt_octet8_t **rand**
The random number

uint16_t **ediv**
The ediv value

uint8_t **sec_level**
The security level of the security link

uint8_t **key_size**
The key size(7~16) of the security link

struct esp_ble_pcsrk_keys_t
BLE CSRK keys.

Public Members

uint32_t **counter**
The counter

esp_bt_octet16_t **csrk**
The csrk key

uint8_t **sec_level**
The security level

struct esp_ble_pid_keys_t
BLE pid keys.

Public Members

esp_bt_octet16_t **irk**
The irk value

esp_ble_addr_type_t **addr_type**
The address type

esp_bd_addr_t **static_addr**
The static address

struct esp_ble_lenc_keys_t
BLE Encryption reproduction keys.

Public Members

esp_bt_octet16_t **ltk**
The long term key

uint16_t **div**
The div value

uint8_t **key_size**
The key size of the security link

uint8_t **sec_level**
The security level of the security link

struct esp_ble_lcsrk_keys
BLE SRK keys.

Public Members

uint32_t **counter**
The counter value

uint16_t **div**
The div value

uint8_t **sec_level**
The security level of the security link

esp_bt_octet16_t **csrk**
The csrk key value

struct esp_ble_sec_key_notif_t
Structure associated with ESP_KEY_NOTIF_EVT.

Public Members

esp_bd_addr_t **bd_addr**
peer address

uint32_t **passkey**
the numeric value for comparison. If just_works, do not show this number to UI

struct esp_ble_sec_req_t
Structure of the security request.

Public Members

esp_bd_addr_t **bd_addr**
peer address

struct esp_ble_bond_key_info_t
struct type of the bond key information value

Public Members

esp_ble_key_mask_t **key_mask**
the key mask to indicate witch key is present

esp_ble_penc_keys_t **penc_key**
received peer encryption key

esp_ble_pcsrk_keys_t **pcsrk_key**
received peer device SRK

esp_ble_pid_keys_t **pid_key**
peer device ID key

struct esp_ble_bond_dev_t
struct type of the bond device value

Public Members

esp_bd_addr_t **bd_addr**
peer address

esp_ble_bond_key_info_t **bond_key**
the bond key information

struct esp_ble_key_t
union type of the security key value

Public Members

esp_bd_addr_t **bd_addr**
peer address

esp_ble_key_type_t **key_type**
key type of the security link

esp_ble_key_value_t **p_key_value**
the pointer to the key value

struct esp_ble_local_id_keys_t
structure type of the ble local id keys value

Public Members

esp_bt_octet16_t **ir**
the 16 bits of the ir value

esp_bt_octet16_t **irk**
the 16 bits of the ir key value

esp_bt_octet16_t **dhk**
the 16 bits of the dh key value

struct esp_ble_auth_cmpl_t
Structure associated with ESP_AUTH_CMPL_EVT.

Public Members

esp_bd_addr_t **bd_addr**
BD address peer device.

bool **key_present**
Valid link key value in key element

esp_link_key **key**
Link key associated with peer device.

uint8_t **key_type**
The type of Link Key

bool **success**
TRUE of authentication succeeded, FALSE if failed.

uint8_t **fail_reason**
The HCI reason/error code for when success=FALSE

esp_ble_addr_type_t **addr_type**
Peer device address type

esp_bt_dev_type_t **dev_type**
Device type

esp_ble_auth_req_t **auth_mode**
authentication mode

struct esp_ble_gap_ext_adv_params_t
ext adv parameters

Public Members

esp_ble_ext_adv_type_mask_t **type**
ext adv type

uint32_t **interval_min**
ext adv minimum interval

uint32_t **interval_max**
ext adv maximum interval

esp_ble_adv_channel_t **channel_map**
ext adv channel map

esp_ble_addr_type_t **own_addr_type**
ext adv own addresss type

esp_ble_addr_type_t **peer_addr_type**
ext adv peer address type

esp_bd_addr_t **peer_addr**
ext adv peer address

esp_ble_adv_filter_t **filter_policy**
ext adv filter policy

int8_t **tx_power**
ext adv tx power

esp_ble_gap_pri_phy_t **primary_phy**
ext adv primary phy

uint8_t **max_skip**
ext adv maximum skip

esp_ble_gap_phy_t **secondary_phy**
ext adv secondary phy

uint8_t **sid**
ext adv sid

bool **scan_req_notif**
ext adv sacn request event notify

struct esp_ble_ext_scan_cfg_t
ext scan config

Public Members

esp_ble_scan_type_t **scan_type**
ext scan type

uint16_t **scan_interval**
ext scan interval

uint16_t **scan_window**
ext scan window

struct esp_ble_ext_scan_params_t
ext scan parameters

Public Members

esp_ble_addr_type_t **own_addr_type**
ext scan own addresss type

esp_ble_scan_filter_t **filter_policy**
ext scan filter policy

esp_ble_scan_duplicate_t **scan_duplicate**
ext scan duplicate scan

esp_ble_ext_scan_cfg_mask_t **cfg_mask**
ext scan config mask

esp_ble_ext_scan_cfg_t **uncoded_cfg**
ext scan uncoded config parameters

esp_ble_ext_scan_cfg_t **coded_cfg**
ext scan coded config parameters

struct esp_ble_gap_conn_params_t
create extend connection parameters

Public Members

uint16_t **scan_interval**
init scan interval

uint16_t **scan_window**
init scan window

uint16_t **interval_min**
minimum interval

uint16_t **interval_max**
maximum interval

uint16_t **latency**
ext scan type

uint16_t **supervision_timeout**
connection supervision timeout

uint16_t **min_ce_len**
minimum ce length

uint16_t **max_ce_len**
maximum ce length

struct esp_ble_gap_ext_adv_t
extend adv enable parameters

Public Members

uint8_t **instance**
advertising handle

int **duration**
advertising duration

int **max_events**
maximum number of extended advertising events

struct esp_ble_gap_periodic_adv_params_t
periodic adv parameters

Public Members

uint16_t **interval_min**
periodic advertising minimum interval

uint16_t **interval_max**
periodic advertising maximum interval

uint8_t **properties**
periodic advertising properties

struct esp_ble_gap_periodic_adv_sync_params_t
periodic adv sync parameters

Public Members

esp_ble_gap_sync_t **filter_policy**
periodic advertising sync filter policy

uint8_t **sid**
periodic advertising sid

esp_ble_addr_type_t **addr_type**
periodic advertising address type

esp_bd_addr_t **addr**
periodic advertising address

uint16_t **skip**
the maximum number of periodic advertising events that can be skipped

uint16_t **sync_timeout**
synchronization timeout

struct esp_ble_gap_ext_adv_reprot_t
extend adv report parameters

Public Members

esp_ble_gap_adv_type_t **event_type**
extend advertising type

uint8_t **addr_type**
extend advertising address type

esp_bd_addr_t **addr**
extend advertising address

esp_ble_gap_pri_phy_t **primary_phy**
extend advertising primary phy

esp_ble_gap_phy_t **secondly_phy**
extend advertising secondary phy

uint8_t **sid**
extend advertising sid

uint8_t **tx_power**
extend advertising tx power

int8_t **rssi**
extend advertising rssi

uint16_t **per_adv_interval**
periodic advertising interval

uint8_t **dir_addr_type**
direct address type

esp_bd_addr_t **dir_addr**
direct address

esp_ble_gap_ext_adv_data_status_t **data_status**
data type

uint8_t **adv_data_len**
extend advertising data length

uint8_t **adv_data**[251]
extend advertising data

struct esp_ble_gap_periodic_adv_report_t
periodic adv report parameters

Public Members

uint16_t **sync_handle**
periodic advertising train handle

uint8_t **tx_power**
periodic advertising tx power

int8_t **rssi**
periodic advertising rssi

esp_ble_gap_ext_adv_data_status_t **data_status**
periodic advertising data type

uint8_t **data_length**
periodic advertising data length

uint8_t **data**[251]
periodic advertising data

struct esp_ble_gap_periodic_adv_sync_estab_t
perodic adv sync establish parameters

Public Members

uint8_t **status**
periodic advertising sync status

uint16_t **sync_handle**
periodic advertising train handle

uint8_t **sid**
periodic advertising sid

esp_ble_addr_type_t **addr_type**
periodic advertising address type

esp_bd_addr_t **adv_addr**
periodic advertising address

esp_ble_gap_phy_t **adv_phy**
periodic advertising adv phy type

uint16_t **period_adv_interval**
periodic advertising interval

uint8_t **adv_clk_accuracy**
periodic advertising clock accuracy

Macros

ESP_BLE_ADV_FLAG_LIMIT_DISC
BLE_ADV_DATA_FLAG data flag bit definition used for advertising data flag

ESP_BLE_ADV_FLAG_GEN_DISC

ESP_BLE_ADV_FLAG_BREDR_NOT_SPT

ESP_BLE_ADV_FLAG_DMT_CONTROLLER_SPT

ESP_BLE_ADV_FLAG_DMT_HOST_SPT

ESP_BLE_ADV_FLAG_NON_LIMIT_DISC

ESP_LE_KEY_NONE

ESP_LE_KEY_PENC

ESP_LE_KEY_PID

ESP_LE_KEY_PCSRK

ESP_LE_KEY_PLK

ESP_LE_KEY_LLK

ESP_LE_KEY_LENC

ESP_LE_KEY_LID

ESP_LE_KEY_LCSRK

ESP_LE_AUTH_NO_BOND

ESP_LE_AUTH_BOND

ESP_LE_AUTH_REQ_MITM

ESP_LE_AUTH_REQ_BOND_MITM
0101

ESP_LE_AUTH_REQ_SC_ONLY

ESP_LE_AUTH_REQ_SC_BOND

ESP_LE_AUTH_REQ_SC_MITM

ESP_LE_AUTH_REQ_SC_MITM_BOND

ESP_BLE_ONLY_ACCEPT_SPECIFIED_AUTH_DISABLE

ESP_BLE_ONLY_ACCEPT_SPECIFIED_AUTH_ENABLE

ESP_BLE_OOB_DISABLE

ESP_BLE_OOB_ENABLE

ESP_IO_CAP_OUT

ESP_IO_CAP_IO

ESP_IO_CAP_IN

ESP_IO_CAP_NONE

ESP_IO_CAP_KBDISP

ESP_BLE_APPEARANCE_UNKNOWN

ESP_BLE_APPEARANCE_GENERIC_PHONE

ESP_BLE_APPEARANCE_GENERIC_COMPUTER

ESP_BLE_APPEARANCE_GENERIC_WATCH

ESP_BLE_APPEARANCE_SPORTS_WATCH

ESP_BLE_APPEARANCE_GENERIC_CLOCK

ESP_BLE_APPEARANCE_GENERIC_DISPLAY

ESP_BLE_APPEARANCE_GENERIC_REMOTE

ESP_BLE_APPEARANCE_GENERIC_EYEGLASSES

ESP_BLE_APPEARANCE_GENERIC_TAG

ESP_BLE_APPEARANCE_GENERIC_KEYRING

ESP_BLE_APPEARANCE_GENERIC_MEDIA_PLAYER

ESP_BLE_APPEARANCE_GENERIC_BARCODE_SCANNER

ESP_BLE_APPEARANCE_GENERIC_THERMOMETER

ESP_BLE_APPEARANCE_THERMOMETER_EAR

ESP_BLE_APPEARANCE_GENERIC_HEART_RATE

ESP_BLE_APPEARANCE_HEART_RATE_BELT

ESP_BLE_APPEARANCE_GENERIC_BLOOD_PRESSURE

ESP_BLE_APPEARANCE_BLOOD_PRESSURE_ARM

ESP_BLE_APPEARANCE_BLOOD_PRESSURE_WRIST

ESP_BLE_APPEARANCE_GENERIC_HID

ESP_BLE_APPEARANCE_HID_KEYBOARD

ESP_BLE_APPEARANCE_HID_MOUSE

ESP_BLE_APPEARANCE_HID_JOYSTICK

ESP_BLE_APPEARANCE_HID_GAMEPAD

ESP_BLE_APPEARANCE_HID_DIGITIZER_TABLET

ESP_BLE_APPEARANCE_HID_CARD_READER

ESP_BLE_APPEARANCE_HID_DIGITAL_PEN

ESP_BLE_APPEARANCE_HID_BARCODE_SCANNER

ESP_BLE_APPEARANCE_GENERIC_GLUCOSE

ESP_BLE_APPEARANCE_GENERIC_WALKING

ESP_BLE_APPEARANCE_WALKING_IN_SHOE

ESP_BLE_APPEARANCE_WALKING_ON_SHOE

ESP_BLE_APPEARANCE_WALKING_ON_HIP

ESP_BLE_APPEARANCE_GENERIC_CYCLING

ESP_BLE_APPEARANCE_CYCLING_COMPUTER

ESP_BLE_APPEARANCE_CYCLING_SPEED

ESP_BLE_APPEARANCE_CYCLING_CADENCE

ESP_BLE_APPEARANCE_CYCLING_POWER

ESP_BLE_APPEARANCE_CYCLING_SPEED_CADENCE

ESP_BLE_APPEARANCE_GENERIC_PULSE_OXIMETER

ESP_BLE_APPEARANCE_PULSE_OXIMETER_FINGERTIP

ESP_BLE_APPEARANCE_PULSE_OXIMETER_WRIST

ESP_BLE_APPEARANCE_GENERIC_WEIGHT

ESP_BLE_APPEARANCE_GENERIC_PERSONAL_MOBILITY_DEVICE

ESP_BLE_APPEARANCE_POWERED_WHEELCHAIR

ESP_BLE_APPEARANCE_MOBILITY_SCOOTER

ESP_BLE_APPEARANCE_GENERIC_CONTINUOUS_GLUCOSE_MONITOR

ESP_BLE_APPEARANCE_GENERIC_INSULIN_PUMP

ESP_BLE_APPEARANCE_INSULIN_PUMP_DURABLE_PUMP

ESP_BLE_APPEARANCE_INSULIN_PUMP_PATCH_PUMP

ESP_BLE_APPEARANCE_INSULIN_PEN

ESP_BLE_APPEARANCE_GENERIC_MEDICATION_DELIVERY

ESP_BLE_APPEARANCE_GENERIC_OUTDOOR_SPORTS

ESP_BLE_APPEARANCE_OUTDOOR_SPORTS_LOCATION

ESP_BLE_APPEARANCE_OUTDOOR_SPORTS_LOCATION_AND_NAV

ESP_BLE_APPEARANCE_OUTDOOR_SPORTS_LOCATION_POD

ESP_BLE_APPEARANCE_OUTDOOR_SPORTS_LOCATION_POD_AND_NAV

ESP_GAP_BLE_CHANNELS_LEN

ESP_GAP_BLE_ADD_WHITELIST_COMPLETE_EVT
This is the old name, just for backwards compatibility.

ESP_BLE_ADV_DATA_LEN_MAX
Advertising data maximum length.

ESP_BLE_SCAN_RSP_DATA_LEN_MAX
Scan response data maximum length.

BLE_BIT (n)

ESP_BLE_GAP_SET_EXT_ADV_PROP_NONCONN_NONSCANNABLE_UNDIRECTED

ESP_BLE_GAP_SET_EXT_ADV_PROP_CONNECTABLE

ESP_BLE_GAP_SET_EXT_ADV_PROP_SCANNABLE

ESP_BLE_GAP_SET_EXT_ADV_PROP_DIRECTED

ESP_BLE_GAP_SET_EXT_ADV_PROP_HD_DIRECTED

ESP_BLE_GAP_SET_EXT_ADV_PROP_LEGACY

ESP_BLE_GAP_SET_EXT_ADV_PROP_ANON_ADV

ESP_BLE_GAP_SET_EXT_ADV_PROP_INCLUDE_TX_PWR

ESP_BLE_GAP_SET_EXT_ADV_PROP_MASK

ESP_BLE_GAP_SET_EXT_ADV_PROP_LEGACY_IND

ESP_BLE_GAP_SET_EXT_ADV_PROP_LEGACY_LD_DIR

ESP_BLE_GAP_SET_EXT_ADV_PROP_LEGACY_HD_DIR

ESP_BLE_GAP_SET_EXT_ADV_PROP_LEGACY_SCAN

ESP_BLE_GAP_SET_EXT_ADV_PROP_LEGACY_NONCONN

ESP_BLE_GAP_PHY_1M

ESP_BLE_GAP_PHY_2M

ESP_BLE_GAP_PHY_CODED

ESP_BLE_GAP_NO_PREFER_TRANSMIT_PHY

ESP_BLE_GAP_NO_PREFER_RECEIVE_PHY

ESP_BLE_GAP_PRI_PHY_1M

ESP_BLE_GAP_PRI_PHY_CODED

ESP_BLE_GAP_PHY_1M_PREF_MASK

ESP_BLE_GAP_PHY_2M_PREF_MASK

ESP_BLE_GAP_PHY_CODED_PREF_MASK

ESP_BLE_GAP_PHY_OPTIONS_NO_PREF

ESP_BLE_GAP_PHY_OPTIONS_PREF_S2_CODING

ESP_BLE_GAP_PHY_OPTIONS_PREF_S8_CODING

ESP_BLE_GAP_EXT_SCAN_CFG_UNCODE_MASK

ESP_BLE_GAP_EXT_SCAN_CFG_CODE_MASK

ESP_BLE_GAP_EXT_ADV_DATA_COMPLETE

ESP_BLE_GAP_EXT_ADV_DATA_INCOMPLETE

ESP_BLE_GAP_EXT_ADV_DATA_TRUNCATED

ESP_BLE_GAP_SYNC_POLICY_BY_ADV_INFO

ESP_BLE_GAP_SYNC_POLICY_BY_PERIODIC_LIST

ESP_BLE_ADV_REPORT_EXT_ADV_IND

ESP_BLE_ADV_REPORT_EXT_SCAN_IND

ESP_BLE_ADV_REPORT_EXT_DIRECT_ADV

ESP_BLE_ADV_REPORT_EXT_SCAN_RSP

ESP_BLE_LEGACY_ADV_TYPE_IND

ESP_BLE_LEGACY_ADV_TYPE_DIRECT_IND

ESP_BLE_LEGACY_ADV_TYPE_SCAN_IND

ESP_BLE_LEGACY_ADV_TYPE_NONCON_IND

ESP_BLE_LEGACY_ADV_TYPE_SCAN_RSP_TO_ADV_IND

ESP_BLE_LEGACY_ADV_TYPE_SCAN_RSP_TO_ADV_SCAN_IND

EXT_ADV_TX_PWR_NO_PREFERENCE
Extend advertising tx power, range: [-127, +126] dBm.

host has no preference for tx power

Type Definitions

typedef uint8_t **esp_ble_key_type_t**

typedef uint8_t **esp_ble_auth_req_t**
combination of the above bit pattern

typedef uint8_t **esp_ble_io_cap_t**
combination of the io capability

typedef uint8_t **esp_gap_ble_channels**[**ESP_GAP_BLE_CHANNELS_LEN**]

typedef uint8_t **esp_duplicate_info_t**[**ESP_BD_ADDR_LEN**]

typedef uint16_t **esp_ble_ext_adv_type_mask_t**

typedef uint8_t **esp_ble_gap_phy_t**

typedef uint8_t **esp_ble_gap_all_phys_t**

typedef uint8_t **esp_ble_gap_pri_phy_t**

typedef uint8_t **esp_ble_gap_phy_mask_t**

typedef uint16_t **esp_ble_gap_prefer_phy_options_t**

typedef uint8_t **esp_ble_ext_scan_cfg_mask_t**

typedef uint8_t **esp_ble_gap_ext_adv_data_status_t**

typedef uint8_t **esp_ble_gap_sync_t**

typedef uint8_t **esp_ble_gap_adv_type_t**

typedef void (***esp_gap_ble_cb_t**)(*esp_gap_ble_cb_event_t* event, *esp_ble_gap_cb_param_t* *param)
GAP callback function type.

Parameters
- `event`: : Event type
- `param`: : Point to callback parameter, currently is union type

Enumerations

enum esp_gap_ble_cb_event_t
GAP BLE callback event type.

Values:

ESP_GAP_BLE_ADV_DATA_SET_COMPLETE_EVT = 0
When advertising data set complete, the event comes

ESP_GAP_BLE_SCAN_RSP_DATA_SET_COMPLETE_EVT
When scan response data set complete, the event comes

ESP_GAP_BLE_SCAN_PARAM_SET_COMPLETE_EVT
When scan parameters set complete, the event comes

ESP_GAP_BLE_SCAN_RESULT_EVT
When one scan result ready, the event comes each time

ESP_GAP_BLE_ADV_DATA_RAW_SET_COMPLETE_EVT
When raw advertising data set complete, the event comes

ESP_GAP_BLE_SCAN_RSP_DATA_RAW_SET_COMPLETE_EVT
When raw advertising data set complete, the event comes

ESP_GAP_BLE_ADV_START_COMPLETE_EVT
When start advertising complete, the event comes

ESP_GAP_BLE_SCAN_START_COMPLETE_EVT
When start scan complete, the event comes

ESP_GAP_BLE_AUTH_CMPL_EVT = 8

ESP_GAP_BLE_KEY_EVT

ESP_GAP_BLE_SEC_REQ_EVT

ESP_GAP_BLE_PASSKEY_NOTIF_EVT

ESP_GAP_BLE_PASSKEY_REQ_EVT

ESP_GAP_BLE_OOB_REQ_EVT

ESP_GAP_BLE_LOCAL_IR_EVT

ESP_GAP_BLE_LOCAL_ER_EVT

ESP_GAP_BLE_NC_REQ_EVT

ESP_GAP_BLE_ADV_STOP_COMPLETE_EVT
When stop adv complete, the event comes

ESP_GAP_BLE_SCAN_STOP_COMPLETE_EVT
When stop scan complete, the event comes

ESP_GAP_BLE_SET_STATIC_RAND_ADDR_EVT = 19
When set the static rand address complete, the event comes

ESP_GAP_BLE_UPDATE_CONN_PARAMS_EVT
When update connection parameters complete, the event comes

ESP_GAP_BLE_SET_PKT_LENGTH_COMPLETE_EVT
When set pkt length complete, the event comes

ESP_GAP_BLE_SET_LOCAL_PRIVACY_COMPLETE_EVT
When Enable/disable privacy on the local device complete, the event comes

ESP_GAP_BLE_REMOVE_BOND_DEV_COMPLETE_EVT
When remove the bond device complete, the event comes

ESP_GAP_BLE_CLEAR_BOND_DEV_COMPLETE_EVT
When clear the bond device clear complete, the event comes

ESP_GAP_BLE_GET_BOND_DEV_COMPLETE_EVT
When get the bond device list complete, the event comes

ESP_GAP_BLE_READ_RSSI_COMPLETE_EVT
When read the rssi complete, the event comes

ESP_GAP_BLE_UPDATE_WHITELIST_COMPLETE_EVT
When add or remove whitelist complete, the event comes

ESP_GAP_BLE_UPDATE_DUPLICATE_EXCEPTIONAL_LIST_COMPLETE_EVT
When update duplicate exceptional list complete, the event comes

ESP_GAP_BLE_SET_CHANNELS_EVT = 29
When setting BLE channels complete, the event comes

ESP_GAP_BLE_READ_PHY_COMPLETE_EVT

ESP_GAP_BLE_SET_PREFERED_DEFAULT_PHY_COMPLETE_EVT

ESP_GAP_BLE_SET_PREFERED_PHY_COMPLETE_EVT

ESP_GAP_BLE_EXT_ADV_SET_RAND_ADDR_COMPLETE_EVT

ESP_GAP_BLE_EXT_ADV_SET_PARAMS_COMPLETE_EVT

ESP_GAP_BLE_EXT_ADV_DATA_SET_COMPLETE_EVT

ESP_GAP_BLE_EXT_SCAN_RSP_DATA_SET_COMPLETE_EVT

ESP_GAP_BLE_EXT_ADV_START_COMPLETE_EVT

ESP_GAP_BLE_EXT_ADV_STOP_COMPLETE_EVT

ESP_GAP_BLE_EXT_ADV_SET_REMOVE_COMPLETE_EVT

ESP_GAP_BLE_EXT_ADV_SET_CLEAR_COMPLETE_EVT

ESP_GAP_BLE_PERIODIC_ADV_SET_PARAMS_COMPLETE_EVT

ESP_GAP_BLE_PERIODIC_ADV_DATA_SET_COMPLETE_EVT

ESP_GAP_BLE_PERIODIC_ADV_START_COMPLETE_EVT

ESP_GAP_BLE_PERIODIC_ADV_STOP_COMPLETE_EVT

ESP_GAP_BLE_PERIODIC_ADV_CREATE_SYNC_COMPLETE_EVT

ESP_GAP_BLE_PERIODIC_ADV_SYNC_CANCEL_COMPLETE_EVT

ESP_GAP_BLE_PERIODIC_ADV_SYNC_TERMINATE_COMPLETE_EVT

ESP_GAP_BLE_PERIODIC_ADV_ADD_DEV_COMPLETE_EVT

ESP_GAP_BLE_PERIODIC_ADV_REMOVE_DEV_COMPLETE_EVT

ESP_GAP_BLE_PERIODIC_ADV_CLEAR_DEV_COMPLETE_EVT

ESP_GAP_BLE_SET_EXT_SCAN_PARAMS_COMPLETE_EVT

ESP_GAP_BLE_EXT_SCAN_START_COMPLETE_EVT

ESP_GAP_BLE_EXT_SCAN_STOP_COMPLETE_EVT

ESP_GAP_BLE_PREFER_EXT_CONN_PARAMS_SET_COMPLETE_EVT

ESP_GAP_BLE_PHY_UPDATE_COMPLETE_EVT

ESP_GAP_BLE_EXT_ADV_REPORT_EVT

ESP_GAP_BLE_SCAN_TIMEOUT_EVT

ESP_GAP_BLE_ADV_TERMINATED_EVT

ESP_GAP_BLE_SCAN_REQ_RECEIVED_EVT

ESP_GAP_BLE_CHANNEL_SELETE_ALGORITHM_EVT

ESP_GAP_BLE_PERIODIC_ADV_REPORT_EVT

ESP_GAP_BLE_PERIODIC_ADV_SYNC_LOST_EVT

ESP_GAP_BLE_PERIODIC_ADV_SYNC_ESTAB_EVT

ESP_GAP_BLE_GET_DEV_NAME_COMPLETE_EVT
When getting BT device name complete, the event comes

ESP_GAP_BLE_EVT_MAX

enum esp_ble_adv_data_type

The type of advertising data(not adv_type)

Values:

ESP_BLE_AD_TYPE_FLAG = 0x01

ESP_BLE_AD_TYPE_16SRV_PART = 0x02

ESP_BLE_AD_TYPE_16SRV_CMPL = 0x03

ESP_BLE_AD_TYPE_32SRV_PART = 0x04

ESP_BLE_AD_TYPE_32SRV_CMPL = 0x05

ESP_BLE_AD_TYPE_128SRV_PART = 0x06

ESP_BLE_AD_TYPE_128SRV_CMPL = 0x07

ESP_BLE_AD_TYPE_NAME_SHORT = 0x08

ESP_BLE_AD_TYPE_NAME_CMPL = 0x09

ESP_BLE_AD_TYPE_TX_PWR = 0x0A

ESP_BLE_AD_TYPE_DEV_CLASS = 0x0D

ESP_BLE_AD_TYPE_SM_TK = 0x10

ESP_BLE_AD_TYPE_SM_OOB_FLAG = 0x11

ESP_BLE_AD_TYPE_INT_RANGE = 0x12

ESP_BLE_AD_TYPE_SOL_SRV_UUID = 0x14

ESP_BLE_AD_TYPE_128SOL_SRV_UUID = 0x15

ESP_BLE_AD_TYPE_SERVICE_DATA = 0x16

ESP_BLE_AD_TYPE_PUBLIC_TARGET = 0x17

ESP_BLE_AD_TYPE_RANDOM_TARGET = 0x18

ESP_BLE_AD_TYPE_APPEARANCE = 0x19

ESP_BLE_AD_TYPE_ADV_INT = 0x1A

ESP_BLE_AD_TYPE_LE_DEV_ADDR = 0x1b

ESP_BLE_AD_TYPE_LE_ROLE = 0x1c

ESP_BLE_AD_TYPE_SPAIR_C256 = 0x1d

ESP_BLE_AD_TYPE_SPAIR_R256 = 0x1e

ESP_BLE_AD_TYPE_32SOL_SRV_UUID = 0x1f

ESP_BLE_AD_TYPE_32SERVICE_DATA = 0x20

ESP_BLE_AD_TYPE_128SERVICE_DATA = 0x21

ESP_BLE_AD_TYPE_LE_SECURE_CONFIRM = 0x22

ESP_BLE_AD_TYPE_LE_SECURE_RANDOM = 0x23

ESP_BLE_AD_TYPE_URI = 0x24

ESP_BLE_AD_TYPE_INDOOR_POSITION = 0x25

ESP_BLE_AD_TYPE_TRANS_DISC_DATA = 0x26

ESP_BLE_AD_TYPE_LE_SUPPORT_FEATURE = 0x27

ESP_BLE_AD_TYPE_CHAN_MAP_UPDATE = 0x28

ESP_BLE_AD_MANUFACTURER_SPECIFIC_TYPE = 0xFF

enum esp_ble_adv_type_t

Advertising mode.

Values:

ADV_TYPE_IND = 0x00

ADV_TYPE_DIRECT_IND_HIGH = 0x01

ADV_TYPE_SCAN_IND = 0x02

ADV_TYPE_NONCONN_IND = 0x03

ADV_TYPE_DIRECT_IND_LOW = 0x04

enum esp_ble_adv_channel_t

Advertising channel mask.

Values:

ADV_CHNL_37 = 0x01

ADV_CHNL_38 = 0x02

ADV_CHNL_39 = 0x04

ADV_CHNL_ALL = 0x07

enum esp_ble_adv_filter_t

Values:

ADV_FILTER_ALLOW_SCAN_ANY_CON_ANY = 0x00

Allow both scan and connection requests from anyone.

ADV_FILTER_ALLOW_SCAN_WLST_CON_ANY

Allow both scan req from White List devices only and connection req from anyone.

ADV_FILTER_ALLOW_SCAN_ANY_CON_WLST

Allow both scan req from anyone and connection req from White List devices only.

ADV_FILTER_ALLOW_SCAN_WLST_CON_WLST

Allow scan and connection requests from White List devices only.

enum esp_ble_sec_act_t

Values:

ESP_BLE_SEC_ENCRYPT = 1

ESP_BLE_SEC_ENCRYPT_NO_MITM

ESP_BLE_SEC_ENCRYPT_MITM

enum esp_ble_sm_param_t

Values:

ESP_BLE_SM_PASSKEY = 0

ESP_BLE_SM_AUTHEN_REQ_MODE

ESP_BLE_SM_IOCAP_MODE

ESP_BLE_SM_SET_INIT_KEY

ESP_BLE_SM_SET_RSP_KEY

ESP_BLE_SM_MAX_KEY_SIZE

ESP_BLE_SM_MIN_KEY_SIZE

ESP_BLE_SM_SET_STATIC_PASSKEY

ESP_BLE_SM_CLEAR_STATIC_PASSKEY

ESP_BLE_SM_ONLY_ACCEPT_SPECIFIED_SEC_AUTH

ESP_BLE_SM_OOB_SUPPORT

ESP_BLE_APP_ENC_KEY_SIZE

ESP_BLE_SM_MAX_PARAM

enum esp_ble_scan_type_t

Ble scan type.

Values:

BLE_SCAN_TYPE_PASSIVE = 0x0

Passive scan

BLE_SCAN_TYPE_ACTIVE = 0x1

Active scan

enum esp_ble_scan_filter_t

Ble scan filter type.

Values:

BLE_SCAN_FILTER_ALLOW_ALL = 0x0

Accept all :

1. advertisement packets except directed advertising packets not addressed to this device (default).

BLE_SCAN_FILTER_ALLOW_ONLY_WLST = 0x1

Accept only :

1. advertisement packets from devices where the advertiser’ s address is in the White list.
2. Directed advertising packets which are not addressed for this device shall be ignored.

BLE_SCAN_FILTER_ALLOW_UND_RPA_DIR = 0x2

Accept all :

1. undirected advertisement packets, and
2. directed advertising packets where the initiator address is a resolvable private address, and
3. directed advertising packets addressed to this device.

BLE_SCAN_FILTER_ALLOW_WLIST_RPA_DIR = 0x3

Accept all :

1. advertisement packets from devices where the advertiser’ s address is in the White list, and
2. directed advertising packets where the initiator address is a resolvable private address, and
3. directed advertising packets addressed to this device.

enum esp_ble_scan_duplicate_t

Ble scan duplicate type.

Values:

BLE_SCAN_DUPLICATE_DISABLE = 0x0

the Link Layer should generate advertising reports to the host for each packet received

BLE_SCAN_DUPLICATE_ENABLE = 0x1

the Link Layer should filter out duplicate advertising reports to the Host

BLE_SCAN_DUPLICATE_MAX = 0x2

0x02 –0xFF, Reserved for future use

enum esp_gap_search_evt_t

Sub Event of ESP_GAP_BLE_SCAN_RESULT_EVT.

Values:

ESP_GAP_SEARCH_INQ_RES_EVT = 0

Inquiry result for a peer device.

ESP_GAP_SEARCH_INQ_CMPL_EVT = 1

Inquiry complete.

ESP_GAP_SEARCH_DISC_RES_EVT = 2
Discovery result for a peer device.

ESP_GAP_SEARCH_DISC_BLE_RES_EVT = 3
Discovery result for BLE GATT based service on a peer device.

ESP_GAP_SEARCH_DISC_CMPL_EVT = 4
Discovery complete.

ESP_GAP_SEARCH_DI_DISC_CMPL_EVT = 5
Discovery complete.

ESP_GAP_SEARCH_SEARCH_CANCEL_CMPL_EVT = 6
Search cancelled

ESP_GAP_SEARCH_INQ_DISCARD_NUM_EVT = 7
The number of pkt discarded by flow control

enum esp_ble_evt_type_t
Ble scan result event type, to indicate the result is scan response or advertising data or other.

Values:

ESP_BLE_EVT_CONN_ADV = 0x00
Connectable undirected advertising (ADV_IND)

ESP_BLE_EVT_CONN_DIR_ADV = 0x01
Connectable directed advertising (ADV_DIRECT_IND)

ESP_BLE_EVT_DISC_ADV = 0x02
Scannable undirected advertising (ADV_SCAN_IND)

ESP_BLE_EVT_NON_CONN_ADV = 0x03
Non connectable undirected advertising (ADV_NONCONN_IND)

ESP_BLE_EVT_SCAN_RSP = 0x04
Scan Response (SCAN_RSP)

enum esp_ble_wl_opration_t
Values:

ESP_BLE_WHITELIST_REMOVE = 0X00
remove mac from whitelist

ESP_BLE_WHITELIST_ADD = 0X01
add address to whitelist

ESP_BLE_WHITELIST_CLEAR = 0x02
clear all device in whitelist

enum esp_bt_duplicate_exceptional_subcode_type_t
Values:

ESP_BLE_DUPLICATE_EXCEPTIONAL_LIST_ADD = 0
Add device info into duplicate scan exceptional list

ESP_BLE_DUPLICATE_EXCEPTIONAL_LIST_REMOVE
Remove device info from duplicate scan exceptional list

ESP_BLE_DUPLICATE_EXCEPTIONAL_LIST_CLEAN
Clean duplicate scan exceptional list

enum esp_ble_duplicate_exceptional_info_type_t
Values:

ESP_BLE_DUPLICATE_SCAN_EXCEPTIONAL_INFO_ADV_ADDR = 0
BLE advertising address , device info will be added into ESP_BLE_DUPLICATE_SCAN_EXCEPTIONAL_ADDR_LIST

ESP_BLE_DUPLICATE_SCAN_EXCEPTIONAL_INFO_MESH_LINK_ID
BLE mesh link ID, it is for BLE mesh, device info will be added into ESP_BLE_DUPLICATE_SCAN_EXCEPTIONAL_MESH_LINK_ID_LIST

ESP_BLE_DUPLICATE_SCAN_EXCEPTIONAL_INFO_MESH_BEACON_TYPE
BLE mesh beacon AD type, the format is | Len | 0x2B | Beacon Type | Beacon Data |

ESP_BLE_DUPLICATE_SCAN_EXCEPTIONAL_INFO_MESH_PROV_SRV_ADV
BLE mesh provisioning service uuid, the format is | 0x02 | 0x01 | flags | 0x03 | 0x03 | 0x1827 | ···. |‘

ESP_BLE_DUPLICATE_SCAN_EXCEPTIONAL_INFO_MESH_PROXY_SRV_ADV
BLE mesh adv with proxy service uuid, the format is | 0x02 | 0x01 | flags | 0x03 | 0x03 | 0x1828 | ···. |‘

enum esp_duplicate_scan_exceptional_list_type_t
Values:

ESP_BLE_DUPLICATE_SCAN_EXCEPTIONAL_ADDR_LIST = BLE_BIT(0)
duplicate scan exceptional addr list

ESP_BLE_DUPLICATE_SCAN_EXCEPTIONAL_MESH_LINK_ID_LIST = BLE_BIT(1)
duplicate scan exceptional mesh link ID list

ESP_BLE_DUPLICATE_SCAN_EXCEPTIONAL_MESH_BEACON_TYPE_LIST = BLE_BIT(2)
duplicate scan exceptional mesh beacon type list

ESP_BLE_DUPLICATE_SCAN_EXCEPTIONAL_MESH_PROV_SRV_ADV_LIST = BLE_BIT(3)
duplicate scan exceptional mesh adv with provisioning service uuid

ESP_BLE_DUPLICATE_SCAN_EXCEPTIONAL_MESH_PROXY_SRV_ADV_LIST = BLE_BIT(4)
duplicate scan exceptional mesh adv with provisioning service uuid

ESP_BLE_DUPLICATE_SCAN_EXCEPTIONAL_ALL_LIST = 0xFFFF
duplicate scan exceptional all list

GATT DEFINES

API Reference

Header File

- bt/host/bluedroid/api/include/api/esp_gatt_defs.h

Unions

union esp_gatt_rsp_t
#include <esp_gatt_defs.h> GATT remote read request response type.

Public Members

esp_gatt_value_t **attr_value**
Gatt attribute structure

uint16_t **handle**
Gatt attribute handle

Structures

struct esp_gatt_id_t
Gatt id, include uuid and instance id.

Public Members

esp_bt_uuid_t **uuid**
UUID

uint8_t **inst_id**
Instance id

struct esp_gatt_srvc_id_t
Gatt service id, include id (uuid and instance id) and primary flag.

Public Members

esp_gatt_id_t **id**
Gatt id, include uuid and instance

bool **is_primary**
This service is primary or not

struct esp_attr_desc_t
Attribute description (used to create database)

Public Members

uint16_t **uuid_length**
UUID length

uint8_t ***uuid_p**
UUID value

uint16_t **perm**
Attribute permission

uint16_t **max_length**
Maximum length of the element

uint16_t **length**
Current length of the element

uint8_t ***value**
Element value array

struct esp_attr_control_t
attribute auto response flag

Public Members

uint8_t **auto_rsp**
if auto_rsp set to ESP_GATT_RSP_BY_APP, means the response of Write/Read operation will by replied by application. if auto_rsp set to ESP_GATT_AUTO_RSP, means the response of Write/Read operation will be replied by GATT stack automatically.

struct esp_gatts_attr_db_t
attribute type added to the gatt server database

Public Members

esp_attr_control_t **attr_control**
The attribute control type

esp_attr_desc_t **att_desc**
The attribute type

struct esp_attr_value_t
set the attribute value type

Public Members

uint16_t **attr_max_len**
attribute max value length

uint16_t **attr_len**
attribute current value length

uint8_t ***attr_value**
the pointer to attribute value

struct esp_gatts_incl_svc_desc_t
Gatt include service entry element.

Public Members

uint16_t **start_hdl**
Gatt start handle value of included service

uint16_t **end_hdl**
Gatt end handle value of included service

uint16_t **uuid**
Gatt attribute value UUID of included service

struct esp_gatts_incl128_svc_desc_t
Gatt include 128 bit service entry element.

Public Members

uint16_t **start_hdl**
Gatt start handle value of included 128 bit service

uint16_t **end_hdl**
Gatt end handle value of included 128 bit service

struct esp_gatt_value_t
Gatt attribute value.

Public Members

uint8_t **value**[**ESP_GATT_MAX_ATTR_LEN**]
Gatt attribute value

uint16_t **handle**
Gatt attribute handle

uint16_t **offset**
Gatt attribute value offset

uint16_t **len**
Gatt attribute value length

uint8_t **auth_req**
Gatt authentication request

struct esp_gatt_conn_params_t
Connection parameters information.

Public Members

uint16_t **interval**
connection interval

uint16_t **latency**
Slave latency for the connection in number of connection events. Range: 0x0000 to 0x01F3

uint16_t **timeout**
Supervision timeout for the LE Link. Range: 0x000A to 0x0C80. Mandatory Range: 0x000A to 0x0C80 Time = N * 10 msec Time Range: 100 msec to 32 seconds

struct esp_gattc_multi_t
read multiple attribute

Public Members

uint8_t **num_attr**
The number of the attribute

uint16_t **handles**[**ESP_GATT_MAX_READ_MULTI_HANDLES**]
The handles list

struct esp_gattc_db_elem_t
data base attribute element

Public Members

esp_gatt_db_attr_type_t **type**
The attribute type

uint16_t **attribute_handle**
The attribute handle, it's valid for all of the type

uint16_t **start_handle**
The service start handle, it's valid only when the type = ESP_GATT_DB_PRIMARY_SERVICE or ESP_GATT_DB_SECONDARY_SERVICE

uint16_t **end_handle**
The service end handle, it's valid only when the type = ESP_GATT_DB_PRIMARY_SERVICE or ESP_GATT_DB_SECONDARY_SERVICE

esp_gatt_char_prop_t **properties**
The characteristic properties, it's valid only when the type = ESP_GATT_DB_CHARACTERISTIC

esp_bt_uuid_t **uuid**
The attribute uuid, it's valid for all of the type

struct esp_gattc_service_elem_t
service element

Public Members

bool **is_primary**
The service flag, true if the service is primary service, else is secondary service

uint16_t **start_handle**
The start handle of the service

uint16_t **end_handle**
The end handle of the service

esp_bt_uuid_t **uuid**
The uuid of the service

struct esp_gattc_char_elem_t
characteristic element

Public Members

uint16_t **char_handle**
The characteristic handle

esp_gatt_char_prop_t **properties**
The characteristic properties

esp_bt_uuid_t **uuid**
The characteristic uuid

struct esp_gattc_descr_elem_t
descriptor element

Public Members

uint16_t **handle**
The characteristic descriptor handle

esp_bt_uuid_t **uuid**
The characteristic descriptor uuid

struct esp_gattc_incl_svc_elem_t
include service element

Public Members

uint16_t **handle**
The include service current attribute handle

uint16_t **incl_srvc_s_handle**
The start handle of the service which has been included

uint16_t **incl_srvc_e_handle**
The end handle of the service which has been included

esp_bt_uuid_t **uuid**
The include service uuid

Macros

ESP_GATT_UUID_IMMEDIATE_ALERT_SVC
All "ESP_GATT_UUID_xxx" is attribute types

ESP_GATT_UUID_LINK_LOSS_SVC

ESP_GATT_UUID_TX_POWER_SVC

ESP_GATT_UUID_CURRENT_TIME_SVC

ESP_GATT_UUID_REF_TIME_UPDATE_SVC

ESP_GATT_UUID_NEXT_DST_CHANGE_SVC

ESP_GATT_UUID_GLUCOSE_SVC

ESP_GATT_UUID_HEALTH_THERMOM_SVC

ESP_GATT_UUID_DEVICE_INFO_SVC

ESP_GATT_UUID_HEART_RATE_SVC

ESP_GATT_UUID_PHONE_ALERT_STATUS_SVC

ESP_GATT_UUID_BATTERY_SERVICE_SVC

ESP_GATT_UUID_BLOOD_PRESSURE_SVC

ESP_GATT_UUID_ALERT_NTF_SVC

ESP_GATT_UUID_HID_SVC

ESP_GATT_UUID_SCAN_PARAMETERS_SVC

ESP_GATT_UUID_RUNNING_SPEED_CADENCE_SVC

ESP_GATT_UUID_Automation_IO_SVC

ESP_GATT_UUID_CYCLING_SPEED_CADENCE_SVC

ESP_GATT_UUID_CYCLING_POWER_SVC

ESP_GATT_UUID_LOCATION_AND_NAVIGATION_SVC

ESP_GATT_UUID_ENVIRONMENTAL_SENSING_SVC

ESP_GATT_UUID_BODY_COMPOSITION

ESP_GATT_UUID_USER_DATA_SVC

ESP_GATT_UUID_WEIGHT_SCALE_SVC

ESP_GATT_UUID_BOND_MANAGEMENT_SVC

ESP_GATT_UUID_CONT_GLUCOSE_MONITOR_SVC

ESP_GATT_UUID_PRI_SERVICE

ESP_GATT_UUID_SEC_SERVICE

ESP_GATT_UUID_INCLUDE_SERVICE

ESP_GATT_UUID_CHAR_DECLARE

ESP_GATT_UUID_CHAR_EXT_PROP

ESP_GATT_UUID_CHAR_DESCRIPTION

ESP_GATT_UUID_CHAR_CLIENT_CONFIG

ESP_GATT_UUID_CHAR_SRVR_CONFIG

ESP_GATT_UUID_CHAR_PRESENT_FORMAT

ESP_GATT_UUID_CHAR_AGG_FORMAT

ESP_GATT_UUID_CHAR_VALID_RANGE

ESP_GATT_UUID_EXT_RPT_REF_DESCR

ESP_GATT_UUID_RPT_REF_DESCR

ESP_GATT_UUID_NUM_DIGITALS_DESCR

ESP_GATT_UUID_VALUE_TRIGGER_DESCR

ESP_GATT_UUID_ENV_SENSING_CONFIG_DESCR

ESP_GATT_UUID_ENV_SENSING_MEASUREMENT_DESCR

ESP_GATT_UUID_ENV_SENSING_TRIGGER_DESCR

ESP_GATT_UUID_TIME_TRIGGER_DESCR

ESP_GATT_UUID_GAP_DEVICE_NAME

ESP_GATT_UUID_GAP_ICON

ESP_GATT_UUID_GAP_PREF_CONN_PARAM

ESP_GATT_UUID_GAP_CENTRAL_ADDR_RESOL

ESP_GATT_UUID_GATT_SRV_CHGD

ESP_GATT_UUID_ALERT_LEVEL

ESP_GATT_UUID_TX_POWER_LEVEL

ESP_GATT_UUID_CURRENT_TIME

ESP_GATT_UUID_LOCAL_TIME_INFO

ESP_GATT_UUID_REF_TIME_INFO

ESP_GATT_UUID_NW_STATUS

ESP_GATT_UUID_NW_TRIGGER

ESP_GATT_UUID_ALERT_STATUS

ESP_GATT_UUID_RINGER_CP

ESP_GATT_UUID_RINGER_SETTING

ESP_GATT_UUID_GM_MEASUREMENT

ESP_GATT_UUID_GM_CONTEXT

ESP_GATT_UUID_GM_CONTROL_POINT

ESP_GATT_UUID_GM_FEATURE

ESP_GATT_UUID_SYSTEM_ID

ESP_GATT_UUID_MODEL_NUMBER_STR

ESP_GATT_UUID_SERIAL_NUMBER_STR

ESP_GATT_UUID_FW_VERSION_STR

ESP_GATT_UUID_HW_VERSION_STR

ESP_GATT_UUID_SW_VERSION_STR

ESP_GATT_UUID_MANU_NAME

ESP_GATT_UUID_IEEE_DATA

ESP_GATT_UUID_PNP_ID

ESP_GATT_UUID_HID_INFORMATION

ESP_GATT_UUID_HID_REPORT_MAP

ESP_GATT_UUID_HID_CONTROL_POINT

ESP_GATT_UUID_HID_REPORT

ESP_GATT_UUID_HID_PROTO_MODE

ESP_GATT_UUID_HID_BT_KB_INPUT

ESP_GATT_UUID_HID_BT_KB_OUTPUT

ESP_GATT_UUID_HID_BT_MOUSE_INPUT

ESP_GATT_HEART_RATE_MEAS
Heart Rate Measurement.

ESP_GATT_BODY_SENSOR_LOCATION
Body Sensor Location.

ESP_GATT_HEART_RATE_CNTL_POINT
Heart Rate Control Point.

ESP_GATT_UUID_BATTERY_LEVEL

ESP_GATT_UUID_SC_CONTROL_POINT

ESP_GATT_UUID_SENSOR_LOCATION

ESP_GATT_UUID_RSC_MEASUREMENT

ESP_GATT_UUID_RSC_FEATURE

ESP_GATT_UUID_CSC_MEASUREMENT

ESP_GATT_UUID_CSC_FEATURE

ESP_GATT_UUID_SCAN_INT_WINDOW

ESP_GATT_UUID_SCAN_REFRESH

ESP_GATT_ILLEGAL_UUID
GATT INVALID UUID.

ESP_GATT_ILLEGAL_HANDLE
GATT INVALID HANDLE.

ESP_GATT_ATTR_HANDLE_MAX
GATT attribute max handle.

ESP_GATT_MAX_READ_MULTI_HANDLES

ESP_GATT_PERM_READ
Attribute permissions.

ESP_GATT_PERM_READ_ENCRYPTED

ESP_GATT_PERM_READ_ENC_MITM

ESP_GATT_PERM_WRITE

ESP_GATT_PERM_WRITE_ENCRYPTED

ESP_GATT_PERM_WRITE_ENC_MITM

ESP_GATT_PERM_WRITE_SIGNED

ESP_GATT_PERM_WRITE_SIGNED_MITM

ESP_GATT_PERM_READ_AUTHORIZATION

ESP_GATT_PERM_WRITE_AUTHORIZATION

ESP_GATT_PERM_ENCRYPT_KEY_SIZE(keysize)

ESP_GATT_CHAR_PROP_BIT_BROADCAST

ESP_GATT_CHAR_PROP_BIT_READ

ESP_GATT_CHAR_PROP_BIT_WRITE_NR

ESP_GATT_CHAR_PROP_BIT_WRITE

ESP_GATT_CHAR_PROP_BIT_NOTIFY

ESP_GATT_CHAR_PROP_BIT_INDICATE

ESP_GATT_CHAR_PROP_BIT_AUTH

ESP_GATT_CHAR_PROP_BIT_EXT_PROP

ESP_GATT_MAX_ATTR_LEN
GATT maximum attribute length.

ESP_GATT_RSP_BY_APP

ESP_GATT_AUTO_RSP

ESP_GATT_IF_NONE
If callback report gattc_if/gatts_if as this macro, means this event is not correspond to any app

Type Definitions

typedef uint16_t **esp_gatt_perm_t**

typedef uint8_t **esp_gatt_char_prop_t**

typedef uint8_t **esp_gatt_if_t**
Gatt interface type, different application on GATT client use different gatt_if

Enumerations

enum esp_gatt_prep_write_type
Attribute write data type from the client.

Values:

ESP_GATT_PREP_WRITE_CANCEL = 0x00
Prepare write cancel

ESP_GATT_PREP_WRITE_EXEC = 0x01
Prepare write execute

enum esp_gatt_status_t
GATT success code and error codes.

Values:

ESP_GATT_OK = 0x0

ESP_GATT_INVALID_HANDLE = 0x01

ESP_GATT_READ_NOT_PERMIT = 0x02

ESP_GATT_WRITE_NOT_PERMIT = 0x03

ESP_GATT_INVALID_PDU = 0x04

ESP_GATT_INSUF_AUTHENTICATION = 0x05

ESP_GATT_REQ_NOT_SUPPORTED = 0x06

ESP_GATT_INVALID_OFFSET = 0x07

ESP_GATT_INSUF_AUTHORIZATION = 0x08

ESP_GATT_PREPARE_Q_FULL = 0x09

ESP_GATT_NOT_FOUND = 0x0a

ESP_GATT_NOT_LONG = 0x0b

ESP_GATT_INSUF_KEY_SIZE = 0x0c

ESP_GATT_INVALID_ATTR_LEN = 0x0d

ESP_GATT_ERR_UNLIKELY = 0x0e

ESP_GATT_INSUF_ENCRYPTION = 0x0f

ESP_GATT_UNSUPPORT_GRP_TYPE = 0x10

ESP_GATT_INSUF_RESOURCE = 0x11

ESP_GATT_NO_RESOURCES = 0x80

ESP_GATT_INTERNAL_ERROR = 0x81

ESP_GATT_WRONG_STATE = 0x82

ESP_GATT_DB_FULL = 0x83

ESP_GATT_BUSY = 0x84

ESP_GATT_ERROR = 0x85

ESP_GATT_CMD_STARTED = 0x86

ESP_GATT_ILLEGAL_PARAMETER = 0x87

ESP_GATT_PENDING = 0x88

ESP_GATT_AUTH_FAIL = 0x89

ESP_GATT_MORE = 0x8a

ESP_GATT_INVALID_CFG = 0x8b

ESP_GATT_SERVICE_STARTED = 0x8c

ESP_GATT_ENCRYPED_MITM = *ESP_GATT_OK*

ESP_GATT_ENCRYPED_NO_MITM = 0x8d

ESP_GATT_NOT_ENCRYPTED = 0x8e

ESP_GATT_CONGESTED = 0x8f

ESP_GATT_DUP_REG = 0x90

ESP_GATT_ALREADY_OPEN = 0x91

ESP_GATT_CANCEL = 0x92

ESP_GATT_STACK_RSP = 0xe0

ESP_GATT_APP_RSP = 0xe1

ESP_GATT_UNKNOWN_ERROR = 0xef

ESP_GATT_CCC_CFG_ERR = 0xfd

ESP_GATT_PRC_IN_PROGRESS = 0xfe

ESP_GATT_OUT_OF_RANGE = 0xff

enum esp_gatt_conn_reason_t

Gatt Connection reason enum.

Values:

ESP_GATT_CONN_UNKNOWN = 0

Gatt connection unknown

ESP_GATT_CONN_L2C_FAILURE = 1

General L2cap failure

ESP_GATT_CONN_TIMEOUT = 0x08

Connection timeout

ESP_GATT_CONN_TERMINATE_PEER_USER = 0x13

Connection terminate by peer user

ESP_GATT_CONN_TERMINATE_LOCAL_HOST = 0x16

Connection terminated by local host

ESP_GATT_CONN_FAIL_ESTABLISH = 0x3e

Connection fail to establish

ESP_GATT_CONN_LMP_TIMEOUT = 0x22

Connection fail for LMP response tout

ESP_GATT_CONN_CONN_CANCEL = 0x0100

L2CAP connection cancelled

ESP_GATT_CONN_NONE = 0x0101
No connection to cancel

enum esp_gatt_auth_req_t
Gatt authentication request type.

Values:

ESP_GATT_AUTH_REQ_NONE = 0

ESP_GATT_AUTH_REQ_NO_MITM = 1

ESP_GATT_AUTH_REQ_MITM = 2

ESP_GATT_AUTH_REQ_SIGNED_NO_MITM = 3

ESP_GATT_AUTH_REQ_SIGNED_MITM = 4

enum esp_service_source_t
Values:

ESP_GATT_SERVICE_FROM_REMOTE_DEVICE = 0

ESP_GATT_SERVICE_FROM_NVS_FLASH = 1

ESP_GATT_SERVICE_FROM_UNKNOWN = 2

enum esp_gatt_write_type_t
Gatt write type.

Values:

ESP_GATT_WRITE_TYPE_NO_RSP = 1
Gatt write attribute need no response

ESP_GATT_WRITE_TYPE_RSP
Gatt write attribute need remote response

enum esp_gatt_db_attr_type_t
the type of attribute element

Values:

ESP_GATT_DB_PRIMARY_SERVICE
Gattc primary service attribute type in the cache

ESP_GATT_DB_SECONDARY_SERVICE
Gattc secondary service attribute type in the cache

ESP_GATT_DB_CHARACTERISTIC
Gattc characteristic attribute type in the cache

ESP_GATT_DB_DESCRIPTOR
Gattc characteristic descriptor attribute type in the cache

ESP_GATT_DB_INCLUDED_SERVICE
Gattc include service attribute type in the cache

ESP_GATT_DB_ALL
Gattc all the attribute (primary service & secondary service & include service & char & descriptor) type in the cache

GATT SERVER API

Application Example Check bluetooth/bluedroid/ble folder in ESP-IDF examples, which contains the following demos and their tutorials:

- This is a GATT sever demo and its tutorial. This demo creates a GATT service with an attribute table, which releases the user from adding attributes one by one. This is the recommended method of adding attributes.

  - bluetooth/bluedroid/ble/gatt_server_service_table
  - GATT Server Service Table Example Walkthrough
- This is a GATT server demo and its tutorial. This demo creates a GATT service by adding attributes one by one as defined by Bluedroid. The recommended method of adding attributes is presented in example above.
  - bluetooth/bluedroid/ble/gatt_server
  - GATT Server Example Walkthrough
- This is a BLE SPP-Like demo. This demo, which acts as a GATT server, can receive data from UART and then send the data to the peer device automatically.
  - bluetooth/bluedroid/ble/ble_spp_server

API Reference

Header File

- bt/host/bluedroid/api/include/api/esp_gatts_api.h

Functions

esp_err_t **esp_ble_gatts_register_callback**(*esp_gatts_cb_t callback*)

This function is called to register application callbacks with BTA GATTS module.

Return
- ESP_OK : success
- other : failed

esp_err_t **esp_ble_gatts_app_register**(uint16_t *app_id*)

This function is called to register application identifier.

Return
- ESP_OK : success
- other : failed

esp_err_t **esp_ble_gatts_app_unregister**(*esp_gatt_if_t gatts_if*)

unregister with GATT Server.

Return
- ESP_OK : success
- other : failed

Parameters
- `[in] gatts_if`: GATT server access interface

esp_err_t **esp_ble_gatts_create_service**(*esp_gatt_if_t gatts_if*, *esp_gatt_srvc_id_t *service_id*, uint16_t *num_handle*)

Create a service. When service creation is done, a callback event ESP_GATTS_CREATE_EVT is called to report status and service ID to the profile. The service ID obtained in the callback function needs to be used when adding included service and characteristics/descriptors into the service.

Return
- ESP_OK : success
- other : failed

Parameters
- `[in] gatts_if`: GATT server access interface
- `[in] service_id`: service ID.
- `[in] num_handle`: number of handle requested for this service.

esp_err_t **esp_ble_gatts_create_attr_tab**(**const** *esp_gatts_attr_db_t *gatts_attr_db*, *esp_gatt_if_t gatts_if*, uint16_t *max_nb_attr*, uint8_t *srvc_inst_id*)

Create a service attribute tab.

Return
- ESP_OK : success
- other : failed

Parameters

- [in] gatts_attr_db: the pointer to the service attr tab
- [in] gatts_if: GATT server access interface
- [in] max_nb_attr: the number of attribute to be added to the service database.
- [in] srvc_inst_id: the instance id of the service

esp_err_t **esp_ble_gatts_add_included_service**(uint16_t *service_handle*, uint16_t *included_service_handle*)

This function is called to add an included service. This function have to be called between 'esp_ble_gatts_create_service' and 'esp_ble_gatts_add_char'. After included service is included, a callback event ESP_GATTS_ADD_INCL_SRVC_EVT is reported the included service ID.

Return

- ESP_OK : success
- other : failed

Parameters

- [in] service_handle: service handle to which this included service is to be added.
- [in] included_service_handle: the service ID to be included.

esp_err_t **esp_ble_gatts_add_char**(uint16_t *service_handle*, *esp_bt_uuid_t* **char_uuid*, *esp_gatt_perm_t* *perm*, *esp_gatt_char_prop_t* *property*, *esp_attr_value_t* **char_val*, *esp_attr_control_t* **control*)

This function is called to add a characteristic into a service.

Return

- ESP_OK : success
- other : failed

Parameters

- [in] service_handle: service handle to which this included service is to be added.
- [in] char_uuid: : Characteristic UUID.
- [in] perm: : Characteristic value declaration attribute permission.
- [in] property: : Characteristic Properties
- [in] char_val: : Characteristic value
- [in] control: : attribute response control byte

esp_err_t **esp_ble_gatts_add_char_descr**(uint16_t *service_handle*, *esp_bt_uuid_t* **descr_uuid*, *esp_gatt_perm_t* *perm*, *esp_attr_value_t* **char_descr_val*, *esp_attr_control_t* **control*)

This function is called to add characteristic descriptor. When it's done, a callback event ESP_GATTS_ADD_DESCR_EVT is called to report the status and an ID number for this descriptor.

Return

- ESP_OK : success
- other : failed

Parameters

- [in] service_handle: service handle to which this characteristic descriptor is to be added.
- [in] perm: descriptor access permission.
- [in] descr_uuid: descriptor UUID.
- [in] char_descr_val: : Characteristic descriptor value
- [in] control: : attribute response control byte

esp_err_t **esp_ble_gatts_delete_service**(uint16_t *service_handle*)

This function is called to delete a service. When this is done, a callback event ESP_GATTS_DELETE_EVT is report with the status.

Return

- ESP_OK : success
- other : failed

Parameters

- [in] service_handle: service_handle to be deleted.

esp_err_t **esp_ble_gatts_start_service**(uint16_t *service_handle*)

This function is called to start a service.

Return

- ESP_OK : success
- other : failed

Parameters

- `[in] service_handle`: the service handle to be started.

esp_err_t **esp_ble_gatts_stop_service**(uint16_t *service_handle*)

This function is called to stop a service.

Return

- ESP_OK : success
- other : failed

Parameters

- `[in] service_handle`: - service to be topped.

esp_err_t **esp_ble_gatts_send_indicate**(*esp_gatt_if_t* *gatts_if*, uint16_t *conn_id*, uint16_t *attr_handle*, uint16_t *value_len*, uint8_t **value*, bool *need_confirm*)

Send indicate or notify to GATT client. Set param need_confirm as false will send notification, otherwise indication.

Return

- ESP_OK : success
- other : failed

Parameters

- `[in] gatts_if`: GATT server access interface
- `[in] conn_id`: - connection id to indicate.
- `[in] attr_handle`: - attribute handle to indicate.
- `[in] value_len`: - indicate value length.
- `[in] value`: value to indicate.
- `[in] need_confirm`: - Whether a confirmation is required. false sends a GATT notification, true sends a GATT indication.

esp_err_t **esp_ble_gatts_send_response**(*esp_gatt_if_t* *gatts_if*, uint16_t *conn_id*, uint32_t *trans_id*, *esp_gatt_status_t* *status*, *esp_gatt_rsp_t* **rsp*)

This function is called to send a response to a request.

Return

- ESP_OK : success
- other : failed

Parameters

- `[in] gatts_if`: GATT server access interface
- `[in] conn_id`: - connection identifier.
- `[in] trans_id`: - transfer id
- `[in] status`: - response status
- `[in] rsp`: - response data.

esp_err_t **esp_ble_gatts_set_attr_value**(uint16_t *attr_handle*, uint16_t *length*, **const** uint8_t **value*)

This function is called to set the attribute value by the application.

Return

- ESP_OK : success
- other : failed

Parameters

- `[in] attr_handle`: the attribute handle which to be set
- `[in] length`: the value length
- `[in] value`: the pointer to the attribute value

esp_gatt_status_t **esp_ble_gatts_get_attr_value**(uint16_t *attr_handle*, uint16_t **length*, **const** uint8_t ***value*)

Retrieve attribute value.

Return

- ESP_GATT_OK : success
- other : failed

Parameters

- `[in] attr_handle`: Attribute handle.
- `[out] length`: pointer to the attribute value length
- `[out] value`: Pointer to attribute value payload, the value cannot be modified by user

esp_err_t **esp_ble_gatts_open** (*esp_gatt_if_t gatts_if*, *esp_bd_addr_t remote_bda*, bool *is_direct*)

Open a direct open connection or add a background auto connection.

Return

- ESP_OK : success
- other : failed

Parameters

- `[in] gatts_if`: GATT server access interface
- `[in] remote_bda`: remote device bluetooth device address.
- `[in] is_direct`: direct connection or background auto connection

esp_err_t **esp_ble_gatts_close** (*esp_gatt_if_t gatts_if*, uint16_t *conn_id*)

Close a connection a remote device.

Return

- ESP_OK : success
- other : failed

Parameters

- `[in] gatts_if`: GATT server access interface
- `[in] conn_id`: connection ID to be closed.

esp_err_t **esp_ble_gatts_send_service_change_indication** (*esp_gatt_if_t gatts_if*, *esp_bd_addr_t remote_bda*)

Send service change indication.

Return

- ESP_OK : success
- other : failed

Parameters

- `[in] gatts_if`: GATT server access interface
- `[in] remote_bda`: remote device bluetooth device address. If remote_bda is NULL then it will send service change indication to all the connected devices and if not then to a specific device

Unions

union esp_ble_gatts_cb_param_t

#include <esp_gatts_api.h> Gatt server callback parameters union.

Public Members

struct *esp_ble_gatts_cb_param_t*::*gatts_reg_evt_param* **reg**

Gatt server callback param of ESP_GATTS_REG_EVT

struct *esp_ble_gatts_cb_param_t*::*gatts_read_evt_param* **read**

Gatt server callback param of ESP_GATTS_READ_EVT

struct *esp_ble_gatts_cb_param_t*::*gatts_write_evt_param* **write**

Gatt server callback param of ESP_GATTS_WRITE_EVT

struct *esp_ble_gatts_cb_param_t*::*gatts_exec_write_evt_param* **exec_write**

Gatt server callback param of ESP_GATTS_EXEC_WRITE_EVT

struct *esp_ble_gatts_cb_param_t*::*gatts_mtu_evt_param* **mtu**

Gatt server callback param of ESP_GATTS_MTU_EVT

struct *esp_ble_gatts_cb_param_t*::*gatts_conf_evt_param* **conf**
Gatt server callback param of ESP_GATTS_CONF_EVT (confirm)

struct *esp_ble_gatts_cb_param_t*::*gatts_create_evt_param* **create**
Gatt server callback param of ESP_GATTS_CREATE_EVT

struct *esp_ble_gatts_cb_param_t*::*gatts_add_incl_srvc_evt_param* **add_incl_srvc**
Gatt server callback param of ESP_GATTS_ADD_INCL_SRVC_EVT

struct *esp_ble_gatts_cb_param_t*::*gatts_add_char_evt_param* **add_char**
Gatt server callback param of ESP_GATTS_ADD_CHAR_EVT

struct *esp_ble_gatts_cb_param_t*::*gatts_add_char_descr_evt_param* **add_char_descr**
Gatt server callback param of ESP_GATTS_ADD_CHAR_DESCR_EVT

struct *esp_ble_gatts_cb_param_t*::*gatts_delete_evt_param* **del**
Gatt server callback param of ESP_GATTS_DELETE_EVT

struct *esp_ble_gatts_cb_param_t*::*gatts_start_evt_param* **start**
Gatt server callback param of ESP_GATTS_START_EVT

struct *esp_ble_gatts_cb_param_t*::*gatts_stop_evt_param* **stop**
Gatt server callback param of ESP_GATTS_STOP_EVT

struct *esp_ble_gatts_cb_param_t*::*gatts_connect_evt_param* **connect**
Gatt server callback param of ESP_GATTS_CONNECT_EVT

struct *esp_ble_gatts_cb_param_t*::*gatts_disconnect_evt_param* **disconnect**
Gatt server callback param of ESP_GATTS_DISCONNECT_EVT

struct *esp_ble_gatts_cb_param_t*::*gatts_open_evt_param* **open**
Gatt server callback param of ESP_GATTS_OPEN_EVT

struct *esp_ble_gatts_cb_param_t*::*gatts_cancel_open_evt_param* **cancel_open**
Gatt server callback param of ESP_GATTS_CANCEL_OPEN_EVT

struct *esp_ble_gatts_cb_param_t*::*gatts_close_evt_param* **close**
Gatt server callback param of ESP_GATTS_CLOSE_EVT

struct *esp_ble_gatts_cb_param_t*::*gatts_congest_evt_param* **congest**
Gatt server callback param of ESP_GATTS_CONGEST_EVT

struct *esp_ble_gatts_cb_param_t*::*gatts_rsp_evt_param* **rsp**
Gatt server callback param of ESP_GATTS_RESPONSE_EVT

struct *esp_ble_gatts_cb_param_t*::*gatts_add_attr_tab_evt_param* **add_attr_tab**
Gatt server callback param of ESP_GATTS_CREAT_ATTR_TAB_EVT

struct *esp_ble_gatts_cb_param_t*::*gatts_set_attr_val_evt_param* **set_attr_val**
Gatt server callback param of ESP_GATTS_SET_ATTR_VAL_EVT

struct *esp_ble_gatts_cb_param_t*::*gatts_send_service_change_evt_param* **service_change**
Gatt server callback param of ESP_GATTS_SEND_SERVICE_CHANGE_EVT

struct gatts_add_attr_tab_evt_param
#include <esp_gatts_api.h> ESP_GATTS_CREAT_ATTR_TAB_EVT.

Public Members

esp_gatt_status_t **status**
Operation status

esp_bt_uuid_t **svc_uuid**
Service uuid type

uint8_t **svc_inst_id**
Service id

uint16_t **num_handle**
The number of the attribute handle to be added to the gatts database

uint16_t ***handles**
The number to the handles

struct gatts_add_char_descr_evt_param
#include <esp_gatts_api.h> ESP_GATTS_ADD_CHAR_DESCR_EVT.

Public Members

esp_gatt_status_t **status**
Operation status

uint16_t **attr_handle**
Descriptor attribute handle

uint16_t **service_handle**
Service attribute handle

esp_bt_uuid_t **descr_uuid**
Characteristic descriptor uuid

struct gatts_add_char_evt_param
#include <esp_gatts_api.h> ESP_GATTS_ADD_CHAR_EVT.

Public Members

esp_gatt_status_t **status**
Operation status

uint16_t **attr_handle**
Characteristic attribute handle

uint16_t **service_handle**
Service attribute handle

esp_bt_uuid_t **char_uuid**
Characteristic uuid

struct gatts_add_incl_srvc_evt_param
#include <esp_gatts_api.h> ESP_GATTS_ADD_INCL_SRVC_EVT.

Public Members

esp_gatt_status_t **status**
Operation status

uint16_t **attr_handle**
Included service attribute handle

uint16_t **service_handle**
Service attribute handle

struct gatts_cancel_open_evt_param
#include <esp_gatts_api.h> ESP_GATTS_CANCEL_OPEN_EVT.

Public Members

esp_gatt_status_t **status**
Operation status

struct gatts_close_evt_param
#include <esp_gatts_api.h> ESP_GATTS_CLOSE_EVT.

Public Members

esp_gatt_status_t **status**
Operation status

uint16_t **conn_id**
Connection id

struct gatts_conf_evt_param
#include <esp_gatts_api.h> ESP_GATTS_CONF_EVT.

Public Members

esp_gatt_status_t **status**
Operation status

uint16_t **conn_id**
Connection id

uint16_t **handle**
attribute handle

uint16_t **len**
The indication or notification value length, len is valid when send notification or indication failed

uint8_t ***value**
The indication or notification value , value is valid when send notification or indication failed

struct gatts_congest_evt_param
#include <esp_gatts_api.h> ESP_GATTS_LISTEN_EVT.

ESP_GATTS_CONGEST_EVT

Public Members

uint16_t **conn_id**
Connection id

bool **congested**
Congested or not

struct gatts_connect_evt_param
#include <esp_gatts_api.h> ESP_GATTS_CONNECT_EVT.

Public Members

uint16_t **conn_id**
Connection id

uint8_t **link_role**
Link role : master role = 0 ; slave role = 1

esp_bd_addr_t **remote_bda**
Remote bluetooth device address

esp_gatt_conn_params_t **conn_params**
current Connection parameters

esp_ble_addr_type_t **ble_addr_type**
Remote BLE device address type

uint16_t **conn_handle**
HCI connection handle

struct gatts_create_evt_param
#include <esp_gatts_api.h> ESP_GATTS_UNREG_EVT.

ESP_GATTS_CREATE_EVT

Public Members

esp_gatt_status_t **status**
Operation status

uint16_t **service_handle**
Service attribute handle

esp_gatt_srvc_id_t **service_id**
Service id, include service uuid and other information

struct gatts_delete_evt_param
#include <esp_gatts_api.h> ESP_GATTS_DELETE_EVT.

Public Members

esp_gatt_status_t **status**
Operation status

uint16_t **service_handle**
Service attribute handle

struct gatts_disconnect_evt_param
#include <esp_gatts_api.h> ESP_GATTS_DISCONNECT_EVT.

Public Members

uint16_t **conn_id**
Connection id

esp_bd_addr_t **remote_bda**
Remote bluetooth device address

esp_gatt_conn_reason_t **reason**
Indicate the reason of disconnection

struct gatts_exec_write_evt_param
#include <esp_gatts_api.h> ESP_GATTS_EXEC_WRITE_EVT.

Public Members

uint16_t **conn_id**
Connection id

uint32_t **trans_id**
Transfer id

esp_bd_addr_t **bda**
The bluetooth device address which been written

uint8_t **exec_write_flag**
Execute write flag

struct gatts_mtu_evt_param
#include <esp_gatts_api.h> ESP_GATTS_MTU_EVT.

Public Members

uint16_t **conn_id**
Connection id

uint16_t **mtu**
MTU size

struct gatts_open_evt_param
#include <esp_gatts_api.h> ESP_GATTS_OPEN_EVT.

Public Members

esp_gatt_status_t **status**
Operation status

struct gatts_read_evt_param
#include <esp_gatts_api.h> ESP_GATTS_READ_EVT.

Public Members

uint16_t **conn_id**
Connection id

uint32_t **trans_id**
Transfer id

esp_bd_addr_t **bda**
The bluetooth device address which been read

uint16_t **handle**
The attribute handle

uint16_t **offset**
Offset of the value, if the value is too long

bool **is_long**
The value is too long or not

bool **need_rsp**
The read operation need to do response

struct gatts_reg_evt_param
#include <esp_gatts_api.h> ESP_GATTS_REG_EVT.

Public Members

esp_gatt_status_t **status**
Operation status

uint16_t **app_id**
Application id which input in register API

struct gatts_rsp_evt_param
#include <esp_gatts_api.h> ESP_GATTS_RESPONSE_EVT.

Public Members

esp_gatt_status_t **status**
Operation status

uint16_t **handle**
Attribute handle which send response

struct gatts_send_service_change_evt_param
#include <esp_gatts_api.h> ESP_GATTS_SEND_SERVICE_CHANGE_EVT.

Public Members

esp_gatt_status_t **status**
Operation status

struct gatts_set_attr_val_evt_param
#include <esp_gatts_api.h> ESP_GATTS_SET_ATTR_VAL_EVT.

Public Members

uint16_t **srvc_handle**
The service handle

uint16_t **attr_handle**
The attribute handle

esp_gatt_status_t **status**
Operation status

struct gatts_start_evt_param
#include <esp_gatts_api.h> ESP_GATTS_START_EVT.

Public Members

esp_gatt_status_t **status**
Operation status

uint16_t **service_handle**
Service attribute handle

struct gatts_stop_evt_param
#include <esp_gatts_api.h> ESP_GATTS_STOP_EVT.

Public Members

esp_gatt_status_t **status**
Operation status

uint16_t **service_handle**
Service attribute handle

struct gatts_write_evt_param
#include <esp_gatts_api.h> ESP_GATTS_WRITE_EVT.

Public Members

uint16_t **conn_id**
Connection id

uint32_t **trans_id**
Transfer id

esp_bd_addr_t **bda**
The bluetooth device address which been written

uint16_t **handle**
The attribute handle

uint16_t **offset**
Offset of the value, if the value is too long

bool **need_rsp**
The write operation need to do response

bool **is_prep**
This write operation is prepare write

uint16_t **len**
The write attribute value length

uint8_t ***value**
The write attribute value

Macros

ESP_GATT_PREP_WRITE_CANCEL
Prepare write flag to indicate cancel prepare write

ESP_GATT_PREP_WRITE_EXEC
Prepare write flag to indicate execute prepare write

Type Definitions

typedef void (***esp_gatts_cb_t**)(*esp_gatts_cb_event_t* event, *esp_gatt_if_t* gatts_if, *esp_ble_gatts_cb_param_t* *param)
GATT Server callback function type.

Parameters
- `event`: : Event type
- `gatts_if`: : GATT server access interface, normally different gatts_if correspond to different profile
- `param`: : Point to callback parameter, currently is union type

Enumerations

enum esp_gatts_cb_event_t

GATT Server callback function events.

Values:

ESP_GATTS_REG_EVT = 0
When register application id, the event comes

ESP_GATTS_READ_EVT = 1
When gatt client request read operation, the event comes

ESP_GATTS_WRITE_EVT = 2
When gatt client request write operation, the event comes

ESP_GATTS_EXEC_WRITE_EVT = 3
When gatt client request execute write, the event comes

ESP_GATTS_MTU_EVT = 4
When set mtu complete, the event comes

ESP_GATTS_CONF_EVT = 5
When receive confirm, the event comes

ESP_GATTS_UNREG_EVT = 6
When unregister application id, the event comes

ESP_GATTS_CREATE_EVT = 7
When create service complete, the event comes

ESP_GATTS_ADD_INCL_SRVC_EVT = 8
When add included service complete, the event comes

ESP_GATTS_ADD_CHAR_EVT = 9
When add characteristic complete, the event comes

ESP_GATTS_ADD_CHAR_DESCR_EVT = 10
When add descriptor complete, the event comes

ESP_GATTS_DELETE_EVT = 11
When delete service complete, the event comes

ESP_GATTS_START_EVT = 12
When start service complete, the event comes

ESP_GATTS_STOP_EVT = 13
When stop service complete, the event comes

ESP_GATTS_CONNECT_EVT = 14
When gatt client connect, the event comes

ESP_GATTS_DISCONNECT_EVT = 15
When gatt client disconnect, the event comes

ESP_GATTS_OPEN_EVT = 16
When connect to peer, the event comes

ESP_GATTS_CANCEL_OPEN_EVT = 17
When disconnect from peer, the event comes

ESP_GATTS_CLOSE_EVT = 18
When gatt server close, the event comes

ESP_GATTS_LISTEN_EVT = 19
When gatt listen to be connected the event comes

ESP_GATTS_CONGEST_EVT = 20
When congest happen, the event comes

ESP_GATTS_RESPONSE_EVT = 21
When gatt send response complete, the event comes

ESP_GATTS_CREAT_ATTR_TAB_EVT = 22
When gatt create table complete, the event comes

ESP_GATTS_SET_ATTR_VAL_EVT = 23
When gatt set attr value complete, the event comes

ESP_GATTS_SEND_SERVICE_CHANGE_EVT = 24
When gatt send service change indication complete, the event comes

GATT CLIENT API

Application Example Check bluetooth/bluedroid/ble folder in ESP-IDF examples, which contains the following demos and their tutorials:

- This is a GATT client demo and its tutorial. This demo can scan for devices, connect to the GATT server and discover its services.
  - bluetooth/bluedroid/ble/gatt_client
  - GATT Client Example Walkthrough
- This is a multiple connection demo and its tutorial. This demo can connect to multiple GATT server devices and discover their services.
  - bluetooth/bluedroid/ble/gattc_multi_connect
  - GATT Client Multi-connection Example Walkthrough
- This is a BLE SPP-Like demo. This demo, which acts as a GATT client, can receive data from UART and then send the data to the peer device automatically.
  - bluetooth/bluedroid/ble/ble_spp_client

API Reference

Header File

- bt/host/bluedroid/api/include/api/esp_gattc_api.h

Functions

esp_err_t **esp_ble_gattc_register_callback**(*esp_gattc_cb_t callback*)
This function is called to register application callbacks with GATTC module.

Return
- ESP_OK: success
- other: failed

Parameters
- `[in] callback`: : pointer to the application callback function.

esp_err_t **esp_ble_gattc_app_register**(uint16_t *app_id*)
This function is called to register application callbacks with GATTC module.

Return
- ESP_OK: success
- other: failed

Parameters
- `[in] app_id`: : Application Identify (UUID), for different application

esp_err_t **esp_ble_gattc_app_unregister**(*esp_gatt_if_t gattc_if*)
This function is called to unregister an application from GATTC module.

Return
- ESP_OK: success
- other: failed

Parameters
- `[in] gattc_if`: Gatt client access interface.

esp_err_t **esp_ble_gattc_open**(*esp_gatt_if_t gattc_if*, *esp_bd_addr_t remote_bda*, *esp_ble_addr_type_t remote_addr_type*, bool *is_direct*)

Open a direct connection or add a background auto connection.

Return

- ESP_OK: success
- other: failed

Parameters

- `[in] gattc_if`: Gatt client access interface.
- `[in] remote_bda`: remote device bluetooth device address.
- `[in] remote_addr_type`: remote device bluetooth device the address type.
- `[in] is_direct`: direct connection or background auto connection(by now, background auto connection is not supported).

esp_err_t **esp_ble_gattc_aux_open**(*esp_gatt_if_t gattc_if*, *esp_bd_addr_t remote_bda*, *esp_ble_addr_type_t remote_addr_type*, bool *is_direct*)

esp_err_t **esp_ble_gattc_close**(*esp_gatt_if_t gattc_if*, uint16_t *conn_id*)

Close the virtual connection to the GATT server. gattc may have multiple virtual GATT server connections when multiple app_id registered, this API only close one virtual GATT server connection. if there exist other virtual GATT server connections, it does not disconnect the physical connection. if you want to disconnect the physical connection directly, you can use esp_ble_gap_disconnect(esp_bd_addr_t remote_device).

Return

- ESP_OK: success
- other: failed

Parameters

- `[in] gattc_if`: Gatt client access interface.
- `[in] conn_id`: connection ID to be closed.

esp_err_t **esp_ble_gattc_send_mtu_req**(*esp_gatt_if_t gattc_if*, uint16_t *conn_id*)

Configure the MTU size in the GATT channel. This can be done only once per connection. Before using, use esp_ble_gatt_set_local_mtu() to configure the local MTU size.

Return

- ESP_OK: success
- other: failed

Parameters

- `[in] gattc_if`: Gatt client access interface.
- `[in] conn_id`: connection ID.

esp_err_t **esp_ble_gattc_search_service**(*esp_gatt_if_t gattc_if*, uint16_t *conn_id*, *esp_bt_uuid_t* **filter_uuid*)

This function is called to get service from local cache. This function report service search result by a callback event, and followed by a service search complete event.

Return

- ESP_OK: success
- other: failed

Parameters

- `[in] gattc_if`: Gatt client access interface.
- `[in] conn_id`: connection ID.
- `[in] filter_uuid`: a UUID of the service application is interested in. If Null, discover for all services.

esp_gatt_status_t **esp_ble_gattc_get_service**(*esp_gatt_if_t gattc_if*, uint16_t *conn_id*, *esp_bt_uuid_t* **svc_uuid*, *esp_gattc_service_elem_t* **result*, uint16_t **count*, uint16_t *offset*)

Find all the service with the given service uuid in the gattc cache, if the svc_uuid is NULL, find all the service. Note: It just get service from local cache, won't get from remote devices. If want to get it from remote device, need to used the esp_ble_gattc_cache_refresh, then call esp_ble_gattc_get_service again.

Return

- ESP_OK: success

- other: failed

Parameters

- `[in] gattc_if`: Gatt client access interface.
- `[in] conn_id`: connection ID which identify the server.
- `[in] svc_uuid`: the pointer to the service uuid.
- `[out] result`: The pointer to the service which has been found in the gattc cache.
- `[inout] count`: input the number of service want to find, it will output the number of service has been found in the gattc cache with the given service uuid.
- `[in] offset`: Offset of the service position to get.

esp_gatt_status_t **esp_ble_gattc_get_all_char**(*esp_gatt_if_t gattc_if*, uint16_t *conn_id*, uint16_t *start_handle*, uint16_t *end_handle*, *esp_gattc_char_elem_t* *result, uint16_t *count, uint16_t *offset*)

Find all the characteristic with the given service in the gattc cache Note: It just get characteristic from local cache, won't get from remote devices.

Return

- ESP_OK: success
- other: failed

Parameters

- `[in] gattc_if`: Gatt client access interface.
- `[in] conn_id`: connection ID which identify the server.
- `[in] start_handle`: the attribute start handle.
- `[in] end_handle`: the attribute end handle
- `[out] result`: The pointer to the characteristic in the service.
- `[inout] count`: input the number of characteristic want to find, it will output the number of characteristic has been found in the gattc cache with the given service.
- `[in] offset`: Offset of the characteristic position to get.

esp_gatt_status_t **esp_ble_gattc_get_all_descr**(*esp_gatt_if_t gattc_if*, uint16_t *conn_id*, uint16_t *char_handle*, *esp_gattc_descr_elem_t* *result, uint16_t *count, uint16_t *offset*)

Find all the descriptor with the given characteristic in the gattc cache Note: It just get descriptor from local cache, won't get from remote devices.

Return

- ESP_OK: success
- other: failed

Parameters

- `[in] gattc_if`: Gatt client access interface.
- `[in] conn_id`: connection ID which identify the server.
- `[in] char_handle`: the given characteristic handle
- `[out] result`: The pointer to the descriptor in the characteristic.
- `[inout] count`: input the number of descriptor want to find, it will output the number of descriptor has been found in the gattc cache with the given characteristic.
- `[in] offset`: Offset of the descriptor position to get.

esp_gatt_status_t **esp_ble_gattc_get_char_by_uuid**(*esp_gatt_if_t gattc_if*, uint16_t *conn_id*, uint16_t *start_handle*, uint16_t *end_handle*, *esp_bt_uuid_t char_uuid*, *esp_gattc_char_elem_t* *result, uint16_t *count)

Find the characteristic with the given characteristic uuid in the gattc cache Note: It just get characteristic from local cache, won't get from remote devices.

Return

- ESP_OK: success
- other: failed

Parameters

- `[in] gattc_if`: Gatt client access interface.
- `[in] conn_id`: connection ID which identify the server.

- `[in] start_handle`: the attribute start handle
- `[in] end_handle`: the attribute end handle
- `[in] char_uuid`: the characteristic uuid
- `[out] result`: The pointer to the characteristic in the service.
- `[inout] count`: input the number of characteristic want to find, it will output the number of characteristic has been found in the gattc cache with the given service.

esp_gatt_status_t **esp_ble_gattc_get_descr_by_uuid**(*esp_gatt_if_t gattc_if*, uint16_t *conn_id*, uint16_t *start_handle*, uint16_t *end_handle*, *esp_bt_uuid_t char_uuid*, *esp_bt_uuid_t descr_uuid*, *esp_gattc_descr_elem_t* **result*, uint16_t **count*)

Find the descriptor with the given characteristic uuid in the gattc cache Note: It just get descriptor from local cache, won't get from remote devices.

Return

- ESP_OK: success
- other: failed

Parameters

- `[in] gattc_if`: Gatt client access interface.
- `[in] conn_id`: connection ID which identify the server.
- `[in] start_handle`: the attribute start handle
- `[in] end_handle`: the attribute end handle
- `[in] char_uuid`: the characteristic uuid.
- `[in] descr_uuid`: the descriptor uuid.
- `[out] result`: The pointer to the descriptor in the given characteristic.
- `[inout] count`: input the number of descriptor want to find, it will output the number of descriptor has been found in the gattc cache with the given characteristic.

esp_gatt_status_t **esp_ble_gattc_get_descr_by_char_handle**(*esp_gatt_if_t gattc_if*, uint16_t *conn_id*, uint16_t *char_handle*, *esp_bt_uuid_t descr_uuid*, *esp_gattc_descr_elem_t* **result*, uint16_t **count*)

Find the descriptor with the given characteristic handle in the gattc cache Note: It just get descriptor from local cache, won't get from remote devices.

Return

- ESP_OK: success
- other: failed

Parameters

- `[in] gattc_if`: Gatt client access interface.
- `[in] conn_id`: connection ID which identify the server.
- `[in] char_handle`: the characteristic handle.
- `[in] descr_uuid`: the descriptor uuid.
- `[out] result`: The pointer to the descriptor in the given characteristic.
- `[inout] count`: input the number of descriptor want to find, it will output the number of descriptor has been found in the gattc cache with the given characteristic.

esp_gatt_status_t **esp_ble_gattc_get_include_service**(*esp_gatt_if_t gattc_if*, uint16_t *conn_id*, uint16_t *start_handle*, uint16_t *end_handle*, *esp_bt_uuid_t* **incl_uuid*, *esp_gattc_incl_svc_elem_t* **result*, uint16_t **count*)

Find the include service with the given service handle in the gattc cache Note: It just get include service from local cache, won't get from remote devices.

Return

- ESP_OK: success
- other: failed

Parameters

- [in] gattc_if: Gatt client access interface.
- [in] conn_id: connection ID which identify the server.
- [in] start_handle: the attribute start handle
- [in] end_handle: the attribute end handle
- [in] incl_uuid: the include service uuid
- [out] result: The pointer to the include service in the given service.
- [inout] count: input the number of include service want to find, it will output the number of include service has been found in the gattc cache with the given service.

esp_gatt_status_t **esp_ble_gattc_get_attr_count**(*esp_gatt_if_t gattc_if*, uint16_t *conn_id*, *esp_gatt_db_attr_type_t type*, uint16_t *start_handle*, uint16_t *end_handle*, uint16_t *char_handle*, uint16_t **count*)

Find the attribute count with the given service or characteristic in the gattc cache.

Return

- ESP_OK: success
- other: failed

Parameters

- [in] gattc_if: Gatt client access interface.
- [in] conn_id: connection ID which identify the server.
- [in] type: the attribute type.
- [in] start_handle: the attribute start handle, if the type is ESP_GATT_DB_DESCRIPTOR, this parameter should be ignore
- [in] end_handle: the attribute end handle, if the type is ESP_GATT_DB_DESCRIPTOR, this parameter should be ignore
- [in] char_handle: the characteristic handle, this parameter valid when the type is ESP_GATT_DB_DESCRIPTOR. If the type isn't ESP_GATT_DB_DESCRIPTOR, this parameter should be ignore.
- [out] count: output the number of attribute has been found in the gattc cache with the given attribute type.

esp_gatt_status_t **esp_ble_gattc_get_db**(*esp_gatt_if_t gattc_if*, uint16_t *conn_id*, uint16_t *start_handle*, uint16_t *end_handle*, *esp_gattc_db_elem_t *db*, uint16_t **count*)

This function is called to get the GATT database. Note: It just get attribute data base from local cache, won't get from remote devices.

Return

- ESP_OK: success
- other: failed

Parameters

- [in] gattc_if: Gatt client access interface.
- [in] start_handle: the attribute start handle
- [in] end_handle: the attribute end handle
- [in] conn_id: connection ID which identify the server.
- [in] db: output parameter which will contain the GATT database copy. Caller is responsible for freeing it.
- [in] count: number of elements in database.

esp_err_t **esp_ble_gattc_read_char**(*esp_gatt_if_t gattc_if*, uint16_t *conn_id*, uint16_t *handle*, *esp_gatt_auth_req_t auth_req*)

This function is called to read a service's characteristics of the given characteristic handle.

Return

- ESP_OK: success
- other: failed

Parameters

- [in] gattc_if: Gatt client access interface.
- [in] conn_id: : connection ID.
- [in] handle: : characteritic handle to read.
- [in] auth_req: : authenticate request type

esp_err_t **esp_ble_gattc_read_by_type**(*esp_gatt_if_t gattc_if*, uint16_t *conn_id*, uint16_t *start_handle*, uint16_t *end_handle*, *esp_bt_uuid_t* **uuid*, *esp_gatt_auth_req_t auth_req*)

This function is called to read a service' s characteristics of the given characteristic UUID.

Return

- ESP_OK: success
- other: failed

Parameters

- `[in] gattc_if`: Gatt client access interface.
- `[in] conn_id`: : connection ID.
- `[in] start_handle`: : the attribute start handle.
- `[in] end_handle`: : the attribute end handle
- `[in] uuid`: : The UUID of attribute which will be read.
- `[in] auth_req`: : authenticate request type

esp_err_t **esp_ble_gattc_read_multiple**(*esp_gatt_if_t gattc_if*, uint16_t *conn_id*, *esp_gattc_multi_t* **read_multi*, *esp_gatt_auth_req_t auth_req*)

This function is called to read multiple characteristic or characteristic descriptors.

Return

- ESP_OK: success
- other: failed

Parameters

- `[in] gattc_if`: Gatt client access interface.
- `[in] conn_id`: : connection ID.
- `[in] read_multi`: : pointer to the read multiple parameter.
- `[in] auth_req`: : authenticate request type

esp_err_t **esp_ble_gattc_read_char_descr**(*esp_gatt_if_t gattc_if*, uint16_t *conn_id*, uint16_t *handle*, *esp_gatt_auth_req_t auth_req*)

This function is called to read a characteristics descriptor.

Return

- ESP_OK: success
- other: failed

Parameters

- `[in] gattc_if`: Gatt client access interface.
- `[in] conn_id`: : connection ID.
- `[in] handle`: : descriptor handle to read.
- `[in] auth_req`: : authenticate request type

esp_err_t **esp_ble_gattc_write_char**(*esp_gatt_if_t gattc_if*, uint16_t *conn_id*, uint16_t *handle*, uint16_t *value_len*, uint8_t **value*, *esp_gatt_write_type_t write_type*, *esp_gatt_auth_req_t auth_req*)

This function is called to write characteristic value.

Return

- ESP_OK: success
- other: failed

Parameters

- `[in] gattc_if`: Gatt client access interface.
- `[in] conn_id`: : connection ID.
- `[in] handle`: : characteristic handle to write.
- `[in] value_len`: length of the value to be written.
- `[in] value`: : the value to be written.
- `[in] write_type`: : the type of attribute write operation.
- `[in] auth_req`: : authentication request.

esp_err_t **esp_ble_gattc_write_char_descr**(*esp_gatt_if_t gattc_if*, uint16_t *conn_id*, uint16_t *handle*, uint16_t *value_len*, uint8_t **value*, *esp_gatt_write_type_t write_type*, *esp_gatt_auth_req_t auth_req*)

This function is called to write characteristic descriptor value.

Return

- ESP_OK: success
- other: failed

Parameters

- `[in] gattc_if`: Gatt client access interface.
- `[in] conn_id`: : connection ID
- `[in] handle`: : descriptor hadle to write.
- `[in] value_len`: length of the value to be written.
- `[in] value`: : the value to be written.
- `[in] write_type`: : the type of attribute write operation.
- `[in] auth_req`: : authentication request.

esp_err_t **esp_ble_gattc_prepare_write**(*esp_gatt_if_t gattc_if*, uint16_t *conn_id*, uint16_t *handle*, uint16_t *offset*, uint16_t *value_len*, uint8_t **value*, *esp_gatt_auth_req_t auth_req*)

This function is called to prepare write a characteristic value.

Return

- ESP_OK: success
- other: failed

Parameters

- `[in] gattc_if`: Gatt client access interface.
- `[in] conn_id`: : connection ID.
- `[in] handle`: : characteristic handle to prepare write.
- `[in] offset`: : offset of the write value.
- `[in] value_len`: length of the value to be written.
- `[in] value`: : the value to be written.
- `[in] auth_req`: : authentication request.

esp_err_t **esp_ble_gattc_prepare_write_char_descr**(*esp_gatt_if_t gattc_if*, uint16_t *conn_id*, uint16_t *handle*, uint16_t *offset*, uint16_t *value_len*, uint8_t **value*, *esp_gatt_auth_req_t auth_req*)

This function is called to prepare write a characteristic descriptor value.

Return

- ESP_OK: success
- other: failed

Parameters

- `[in] gattc_if`: Gatt client access interface.
- `[in] conn_id`: : connection ID.
- `[in] handle`: : characteristic descriptor handle to prepare write.
- `[in] offset`: : offset of the write value.
- `[in] value_len`: length of the value to be written.
- `[in] value`: : the value to be written.
- `[in] auth_req`: : authentication request.

esp_err_t **esp_ble_gattc_execute_write**(*esp_gatt_if_t gattc_if*, uint16_t *conn_id*, bool *is_execute*)

This function is called to execute write a prepare write sequence.

Return

- ESP_OK: success
- other: failed

Parameters

- `[in] gattc_if`: Gatt client access interface.
- `[in] conn_id`: : connection ID.

- [in] is_execute: : execute or cancel.

esp_err_t **esp_ble_gattc_register_for_notify**(*esp_gatt_if_t gattc_if*, *esp_bd_addr_t server_bda*, uint16_t *handle*)

This function is called to register for notification of a service.

Return

- ESP_OK: registration succeeds
- other: failed

Parameters

- [in] gattc_if: Gatt client access interface.
- [in] server_bda: : target GATT server.
- [in] handle: : GATT characteristic handle.

esp_err_t **esp_ble_gattc_unregister_for_notify**(*esp_gatt_if_t gattc_if*, *esp_bd_addr_t server_bda*, uint16_t *handle*)

This function is called to de-register for notification of a service.

Return

- ESP_OK: unregister succeeds
- other: failed

Parameters

- [in] gattc_if: Gatt client access interface.
- [in] server_bda: : target GATT server.
- [in] handle: : GATT characteristic handle.

esp_err_t **esp_ble_gattc_cache_refresh**(*esp_bd_addr_t remote_bda*)

Refresh the server cache store in the gattc stack of the remote device. If the device is connected, this API will restart the discovery of service information of the remote device.

Return

- ESP_OK: success
- other: failed

Parameters

- [in] remote_bda: remote device BD address.

esp_err_t **esp_ble_gattc_cache_assoc**(*esp_gatt_if_t gattc_if*, *esp_bd_addr_t src_addr*, *esp_bd_addr_t assoc_addr*, bool *is_assoc*)

Add or delete the associated address with the source address. Note: The role of this API is mainly when the client side has stored a server-side database, when it needs to connect another device, but the device ' s attribute database is the same as the server database stored on the client-side, calling this API can use the database that the device has stored used as the peer server database to reduce the attribute database search and discovery process and speed up the connection time. The associated address mains that device want to used the database has stored in the local cache. The source address mains that device want to share the database to the associated address device.

Return

- ESP_OK: success
- other: failed

Parameters

- [in] gattc_if: Gatt client access interface.
- [in] src_addr: the source address which provide the attribute table.
- [in] assoc_addr: the associated device address which went to share the attribute table with the source address.
- [in] is_assoc: true add the associated device address, false remove the associated device address.

esp_err_t **esp_ble_gattc_cache_get_addr_list**(*esp_gatt_if_t gattc_if*)

Get the address list which has store the attribute table in the gattc cache. There will callback ESP_GATTC_GET_ADDR_LIST_EVT event when get address list complete.

Return

- ESP_OK: success
- other: failed

Parameters

- `[in] gattc_if`: Gatt client access interface.

esp_err_t **esp_ble_gattc_cache_clean** (*esp_bd_addr_t remote_bda*)

Clean the service cache of this device in the gattc stack,.

Return

- ESP_OK: success
- other: failed

Parameters

- `[in] remote_bda`: remote device BD address.

Unions

union esp_ble_gattc_cb_param_t

#include <esp_gattc_api.h> Gatt client callback parameters union.

Public Members

struct *esp_ble_gattc_cb_param_t*::*gattc_reg_evt_param* **reg**

Gatt client callback param of ESP_GATTC_REG_EVT

struct *esp_ble_gattc_cb_param_t*::*gattc_open_evt_param* **open**

Gatt client callback param of ESP_GATTC_OPEN_EVT

struct *esp_ble_gattc_cb_param_t*::*gattc_close_evt_param* **close**

Gatt client callback param of ESP_GATTC_CLOSE_EVT

struct *esp_ble_gattc_cb_param_t*::*gattc_cfg_mtu_evt_param* **cfg_mtu**

Gatt client callback param of ESP_GATTC_CFG_MTU_EVT

struct *esp_ble_gattc_cb_param_t*::*gattc_search_cmpl_evt_param* **search_cmpl**

Gatt client callback param of ESP_GATTC_SEARCH_CMPL_EVT

struct *esp_ble_gattc_cb_param_t*::*gattc_search_res_evt_param* **search_res**

Gatt client callback param of ESP_GATTC_SEARCH_RES_EVT

struct *esp_ble_gattc_cb_param_t*::*gattc_read_char_evt_param* **read**

Gatt client callback param of ESP_GATTC_READ_CHAR_EVT

struct *esp_ble_gattc_cb_param_t*::*gattc_write_evt_param* **write**

Gatt client callback param of ESP_GATTC_WRITE_DESCR_EVT

struct *esp_ble_gattc_cb_param_t*::*gattc_exec_cmpl_evt_param* **exec_cmpl**

Gatt client callback param of ESP_GATTC_EXEC_EVT

struct *esp_ble_gattc_cb_param_t*::*gattc_notify_evt_param* **notify**

Gatt client callback param of ESP_GATTC_NOTIFY_EVT

struct *esp_ble_gattc_cb_param_t*::*gattc_srvc_chg_evt_param* **srvc_chg**

Gatt client callback param of ESP_GATTC_SRVC_CHG_EVT

struct *esp_ble_gattc_cb_param_t*::*gattc_congest_evt_param* **congest**

Gatt client callback param of ESP_GATTC_CONGEST_EVT

struct *esp_ble_gattc_cb_param_t*::*gattc_reg_for_notify_evt_param* **reg_for_notify**

Gatt client callback param of ESP_GATTC_REG_FOR_NOTIFY_EVT

struct *esp_ble_gattc_cb_param_t*::*gattc_unreg_for_notify_evt_param* **unreg_for_notify**

Gatt client callback param of ESP_GATTC_UNREG_FOR_NOTIFY_EVT

struct *esp_ble_gattc_cb_param_t*::*gattc_connect_evt_param* **connect**

Gatt client callback param of ESP_GATTC_CONNECT_EVT

struct *esp_ble_gattc_cb_param_t*::*gattc_disconnect_evt_param* **disconnect**

Gatt client callback param of ESP_GATTC_DISCONNECT_EVT

struct *esp_ble_gattc_cb_param_t*::*gattc_set_assoc_addr_cmp_evt_param* **set_assoc_cmp**
Gatt client callback param of ESP_GATTC_SET_ASSOC_EVT

struct *esp_ble_gattc_cb_param_t*::*gattc_get_addr_list_evt_param* **get_addr_list**
Gatt client callback param of ESP_GATTC_GET_ADDR_LIST_EVT

struct *esp_ble_gattc_cb_param_t*::*gattc_queue_full_evt_param* **queue_full**
Gatt client callback param of ESP_GATTC_QUEUE_FULL_EVT

struct *esp_ble_gattc_cb_param_t*::*gattc_dis_srvc_cmpl_evt_param* **dis_srvc_cmpl**
Gatt client callback param of ESP_GATTC_DIS_SRVC_CMPL_EVT

struct gattc_cfg_mtu_evt_param
#include <esp_gattc_api.h> ESP_GATTC_CFG_MTU_EVT.

Public Members

esp_gatt_status_t **status**
Operation status

uint16_t **conn_id**
Connection id

uint16_t **mtu**
MTU size

struct gattc_close_evt_param
#include <esp_gattc_api.h> ESP_GATTC_CLOSE_EVT.

Public Members

esp_gatt_status_t **status**
Operation status

uint16_t **conn_id**
Connection id

esp_bd_addr_t **remote_bda**
Remote bluetooth device address

esp_gatt_conn_reason_t **reason**
The reason of gatt connection close

struct gattc_congest_evt_param
#include <esp_gattc_api.h> ESP_GATTC_CONGEST_EVT.

Public Members

uint16_t **conn_id**
Connection id

bool **congested**
Congested or not

struct gattc_connect_evt_param
#include <esp_gattc_api.h> ESP_GATTC_CONNECT_EVT.

Public Members

uint16_t **conn_id**
Connection id

uint8_t **link_role**
Link role : master role = 0 ; slave role = 1

esp_bd_addr_t **remote_bda**
Remote bluetooth device address

esp_gatt_conn_params_t **conn_params**
current connection parameters

esp_ble_addr_type_t **ble_addr_type**
Remote BLE device address type

uint16_t **conn_handle**
HCI connection handle

struct gattc_dis_srvc_cmpl_evt_param
#include <esp_gattc_api.h> ESP_GATTC_DIS_SRVC_CMPL_EVT.

Public Members

esp_gatt_status_t **status**
Operation status

uint16_t **conn_id**
Connection id

struct gattc_disconnect_evt_param
#include <esp_gattc_api.h> ESP_GATTC_DISCONNECT_EVT.

Public Members

esp_gatt_conn_reason_t **reason**
disconnection reason

uint16_t **conn_id**
Connection id

esp_bd_addr_t **remote_bda**
Remote bluetooth device address

struct gattc_exec_cmpl_evt_param
#include <esp_gattc_api.h> ESP_GATTC_EXEC_EVT.

Public Members

esp_gatt_status_t **status**
Operation status

uint16_t **conn_id**
Connection id

struct gattc_get_addr_list_evt_param
#include <esp_gattc_api.h> ESP_GATTC_GET_ADDR_LIST_EVT.

Public Members

esp_gatt_status_t **status**
Operation status

uint8_t **num_addr**
The number of address in the gattc cache address list

esp_bd_addr_t ***addr_list**
The pointer to the address list which has been get from the gattc cache

struct gattc_notify_evt_param
#include <esp_gattc_api.h> ESP_GATTC_NOTIFY_EVT.

Public Members

uint16_t **conn_id**
Connection id

esp_bd_addr_t **remote_bda**
Remote bluetooth device address

uint16_t **handle**
The Characteristic or descriptor handle

uint16_t **value_len**
Notify attribute value

uint8_t ***value**
Notify attribute value

bool **is_notify**
True means notify, false means indicate

struct gattc_open_evt_param
#include <esp_gattc_api.h> ESP_GATTC_OPEN_EVT.

Public Members

esp_gatt_status_t **status**
Operation status

uint16_t **conn_id**
Connection id

esp_bd_addr_t **remote_bda**
Remote bluetooth device address

uint16_t **mtu**
MTU size

struct gattc_queue_full_evt_param
#include <esp_gattc_api.h> ESP_GATTC_QUEUE_FULL_EVT.

Public Members

esp_gatt_status_t **status**
Operation status

uint16_t **conn_id**
Connection id

bool **is_full**
The gattc command queue is full or not

struct gattc_read_char_evt_param
#include <esp_gattc_api.h> ESP_GATTC_READ_CHAR_EVT, ESP_GATTC_READ_DESCR_EVT, ESP_GATTC_READ_MULTIPLE_EVT, ESP_GATTC_READ_MULTI_VAR_EVT.

Public Members

esp_gatt_status_t **status**
Operation status

uint16_t **conn_id**
Connection id

uint16_t **handle**
Characteristic handle

uint8_t ***value**
Characteristic value

uint16_t **value_len**
Characteristic value length

struct gattc_reg_evt_param
#include <esp_gattc_api.h> ESP_GATTC_REG_EVT.

Public Members

esp_gatt_status_t **status**
Operation status

uint16_t **app_id**
Application id which input in register API

struct gattc_reg_for_notify_evt_param
#include <esp_gattc_api.h> ESP_GATTC_REG_FOR_NOTIFY_EVT.

Public Members

esp_gatt_status_t **status**
Operation status

uint16_t **handle**
The characteristic or descriptor handle

struct gattc_search_cmpl_evt_param
#include <esp_gattc_api.h> ESP_GATTC_SEARCH_CMPL_EVT.

Public Members

esp_gatt_status_t **status**
Operation status

uint16_t **conn_id**
Connection id

esp_service_source_t **searched_service_source**
The source of the service information

struct gattc_search_res_evt_param
#include <esp_gattc_api.h> ESP_GATTC_SEARCH_RES_EVT.

Public Members

uint16_t **conn_id**
Connection id

uint16_t **start_handle**
Service start handle

uint16_t **end_handle**
Service end handle

esp_gatt_id_t **srvc_id**
Service id, include service uuid and other information

bool **is_primary**
True if this is the primary service

struct gattc_set_assoc_addr_cmp_evt_param
#include <esp_gattc_api.h> ESP_GATTC_SET_ASSOC_EVT.

Public Members

esp_gatt_status_t **status**
Operation status

struct gattc_srvc_chg_evt_param
#include <esp_gattc_api.h> ESP_GATTC_SRVC_CHG_EVT.

Public Members

esp_bd_addr_t **remote_bda**
Remote bluetooth device address

struct gattc_unreg_for_notify_evt_param
#include <esp_gattc_api.h> ESP_GATTC_UNREG_FOR_NOTIFY_EVT.

Public Members

esp_gatt_status_t **status**
Operation status

uint16_t **handle**
The characteristic or descriptor handle

struct gattc_write_evt_param
#include <esp_gattc_api.h> ESP_GATTC_WRITE_CHAR_EVT, ESP_GATTC_PREP_WRITE_EVT, ESP_GATTC_WRITE_DESCR_EVT.

Public Members

esp_gatt_status_t **status**
Operation status

uint16_t **conn_id**
Connection id

uint16_t **handle**
The Characteristic or descriptor handle

uint16_t **offset**
The prepare write offset, this value is valid only when prepare write

Type Definitions

typedef void (***esp_gattc_cb_t**) (*esp_gattc_cb_event_t* event, *esp_gatt_if_t* gattc_if, *esp_ble_gattc_cb_param_t* *param)

GATT Client callback function type.

Parameters

- `event`: : Event type
- `gattc_if`: : GATT client access interface, normally different gattc_if correspond to different profile
- `param`: : Point to callback parameter, currently is union type

Enumerations

enum esp_gattc_cb_event_t

GATT Client callback function events.

Values:

ESP_GATTC_REG_EVT = 0
When GATT client is registered, the event comes

ESP_GATTC_UNREG_EVT = 1
When GATT client is unregistered, the event comes

ESP_GATTC_OPEN_EVT = 2
When GATT virtual connection is set up, the event comes

ESP_GATTC_READ_CHAR_EVT = 3
When GATT characteristic is read, the event comes

ESP_GATTC_WRITE_CHAR_EVT = 4
When GATT characteristic write operation completes, the event comes

ESP_GATTC_CLOSE_EVT = 5
When GATT virtual connection is closed, the event comes

ESP_GATTC_SEARCH_CMPL_EVT = 6
When GATT service discovery is completed, the event comes

ESP_GATTC_SEARCH_RES_EVT = 7
When GATT service discovery result is got, the event comes

ESP_GATTC_READ_DESCR_EVT = 8
When GATT characteristic descriptor read completes, the event comes

ESP_GATTC_WRITE_DESCR_EVT = 9
When GATT characteristic descriptor write completes, the event comes

ESP_GATTC_NOTIFY_EVT = 10
When GATT notification or indication arrives, the event comes

ESP_GATTC_PREP_WRITE_EVT = 11
When GATT prepare-write operation completes, the event comes

ESP_GATTC_EXEC_EVT = 12
When write execution completes, the event comes

ESP_GATTC_ACL_EVT = 13
When ACL connection is up, the event comes

ESP_GATTC_CANCEL_OPEN_EVT = 14
When GATT client ongoing connection is cancelled, the event comes

ESP_GATTC_SRVC_CHG_EVT = 15
When "service changed" occurs, the event comes

ESP_GATTC_ENC_CMPL_CB_EVT = 17
When encryption procedure completes, the event comes

ESP_GATTC_CFG_MTU_EVT = 18
When configuration of MTU completes, the event comes

ESP_GATTC_ADV_DATA_EVT = 19
When advertising of data, the event comes

ESP_GATTC_MULT_ADV_ENB_EVT = 20
When multi-advertising is enabled, the event comes

ESP_GATTC_MULT_ADV_UPD_EVT = 21
When multi-advertising parameters are updated, the event comes

ESP_GATTC_MULT_ADV_DATA_EVT = 22
When multi-advertising data arrives, the event comes

ESP_GATTC_MULT_ADV_DIS_EVT = 23
When multi-advertising is disabled, the event comes

ESP_GATTC_CONGEST_EVT = 24
When GATT connection congestion comes, the event comes

ESP_GATTC_BTH_SCAN_ENB_EVT = 25
When batch scan is enabled, the event comes

ESP_GATTC_BTH_SCAN_CFG_EVT = 26
When batch scan storage is configured, the event comes

ESP_GATTC_BTH_SCAN_RD_EVT = 27
When Batch scan read event is reported, the event comes

ESP_GATTC_BTH_SCAN_THR_EVT = 28
When Batch scan threshold is set, the event comes

ESP_GATTC_BTH_SCAN_PARAM_EVT = 29
When Batch scan parameters are set, the event comes

ESP_GATTC_BTH_SCAN_DIS_EVT = 30
When Batch scan is disabled, the event comes

ESP_GATTC_SCAN_FLT_CFG_EVT = 31
When Scan filter configuration completes, the event comes

ESP_GATTC_SCAN_FLT_PARAM_EVT = 32
When Scan filter parameters are set, the event comes

ESP_GATTC_SCAN_FLT_STATUS_EVT = 33
When Scan filter status is reported, the event comes

ESP_GATTC_ADV_VSC_EVT = 34
When advertising vendor spec content event is reported, the event comes

ESP_GATTC_REG_FOR_NOTIFY_EVT = 38
When register for notification of a service completes, the event comes

ESP_GATTC_UNREG_FOR_NOTIFY_EVT = 39
When unregister for notification of a service completes, the event comes

ESP_GATTC_CONNECT_EVT = 40
When the ble physical connection is set up, the event comes

ESP_GATTC_DISCONNECT_EVT = 41
When the ble physical connection disconnected, the event comes

ESP_GATTC_READ_MULTIPLE_EVT = 42
When the ble characteristic or descriptor multiple complete, the event comes

ESP_GATTC_QUEUE_FULL_EVT = 43
When the gattc command queue full, the event comes

ESP_GATTC_SET_ASSOC_EVT = 44
When the ble gattc set the associated address complete, the event comes

ESP_GATTC_GET_ADDR_LIST_EVT = 45
When the ble get gattc address list in cache finish, the event comes

ESP_GATTC_DIS_SRVC_CMPL_EVT = 46
When the ble discover service complete, the event comes

BLUFI API

Overview BLUFI is a profile based GATT to config ESP32 WIFI to connect/disconnect AP or setup a softap and etc. Use should concern these things:

1. The event sent from profile. Then you need to do something as the event indicate.
2. Security reference. You can write your own Security functions such as symmetrical encryption/decryption and checksum functions. Even you can define the "Key Exchange/Negotiation" procedure.

Application Example Check bluetooth folder in ESP-IDF examples, which contains the following application:

- This is the BLUFI demo. This demo can set ESP32's wifi to softap/station/softap&station mode and config wifi connections - bluetooth/blufi

API Reference

Header File

- bt/common/api/include/api/esp_blufi_api.h

Functions

esp_err_t **esp_blufi_register_callbacks**(*esp_blufi_callbacks_t* **callbacks*)
This function is called to receive blufi callback event.

Return ESP_OK - success, other - failed
Parameters
- `[in] callbacks`: callback functions

esp_err_t **esp_blufi_profile_init**(void)
This function is called to initialize blufi_profile.

Return ESP_OK - success, other - failed

esp_err_t **esp_blufi_profile_deinit**(void)
This function is called to de-initialize blufi_profile.

Return ESP_OK - success, other - failed

esp_err_t **esp_blufi_send_wifi_conn_report**(*wifi_mode_t* *opmode*, *esp_blufi_sta_conn_state_t* *sta_conn_state*, uint8_t *softap_conn_num*, *esp_blufi_extra_info_t* **extra_info*)
This function is called to send wifi connection report.

Return ESP_OK - success, other - failed
Parameters

- `opmode`: : wifi opmode
- `sta_conn_state`: : station is already in connection or not
- `softap_conn_num`: : softap connection number
- `extra_info`: : extra information, such as sta_ssid, softap_ssid and etc.

esp_err_t **esp_blufi_send_wifi_list** (uint16_t *apCount*, *esp_blufi_ap_record_t* **list*)
This function is called to send wifi list.

Return ESP_OK - success, other - failed
Parameters
- `apCount`: : wifi list count
- `list`: : wifi list

uint16_t **esp_blufi_get_version** (void)
Get BLUFI profile version.

Return Most 8bit significant is Great version, Least 8bit is Sub version

esp_err_t **esp_blufi_send_error_info** (*esp_blufi_error_state_t state*)
This function is called to send blufi error information.

Return ESP_OK - success, other - failed
Parameters
- `state`: : error state

esp_err_t **esp_blufi_send_custom_data** (uint8_t **data*, uint32_t *data_len*)
This function is called to custom data.

Return ESP_OK - success, other - failed
Parameters
- `data`: : custom data value
- `data_len`: : the length of custom data

Unions

union esp_blufi_cb_param_t
#include <esp_blufi_api.h> BLUFI callback parameters union.

Public Members

struct *esp_blufi_cb_param_t*::*blufi_init_finish_evt_param* **init_finish**
Blufi callback param of ESP_BLUFI_EVENT_INIT_FINISH

struct *esp_blufi_cb_param_t*::*blufi_deinit_finish_evt_param* **deinit_finish**
Blufi callback param of ESP_BLUFI_EVENT_DEINIT_FINISH

struct *esp_blufi_cb_param_t*::*blufi_set_wifi_mode_evt_param* **wifi_mode**
Blufi callback param of ESP_BLUFI_EVENT_INIT_FINISH

struct *esp_blufi_cb_param_t*::*blufi_connect_evt_param* **connect**
Blufi callback param of ESP_BLUFI_EVENT_CONNECT

struct *esp_blufi_cb_param_t*::*blufi_disconnect_evt_param* **disconnect**
Blufi callback param of ESP_BLUFI_EVENT_DISCONNECT

struct *esp_blufi_cb_param_t*::*blufi_recv_sta_bssid_evt_param* **sta_bssid**
Blufi callback param of ESP_BLUFI_EVENT_RECV_STA_BSSID

struct *esp_blufi_cb_param_t*::*blufi_recv_sta_ssid_evt_param* **sta_ssid**
Blufi callback param of ESP_BLUFI_EVENT_RECV_STA_SSID

struct *esp_blufi_cb_param_t*::*blufi_recv_sta_passwd_evt_param* **sta_passwd**
Blufi callback param of ESP_BLUFI_EVENT_RECV_STA_PASSWD

struct *esp_blufi_cb_param_t*::*blufi_recv_softap_ssid_evt_param* **softap_ssid**
Blufi callback param of ESP_BLUFI_EVENT_RECV_SOFTAP_SSID

struct *esp_blufi_cb_param_t*::*blufi_recv_softap_passwd_evt_param* **softap_passwd**
Blufi callback param of ESP_BLUFI_EVENT_RECV_SOFTAP_PASSWD

struct *esp_blufi_cb_param_t*::*blufi_recv_softap_max_conn_num_evt_param* **softap_max_conn_num**
Blufi callback param of ESP_BLUFI_EVENT_RECV_SOFTAP_MAX_CONN_NUM

struct *esp_blufi_cb_param_t*::*blufi_recv_softap_auth_mode_evt_param* **softap_auth_mode**
Blufi callback param of ESP_BLUFI_EVENT_RECV_SOFTAP_AUTH_MODE

struct *esp_blufi_cb_param_t*::*blufi_recv_softap_channel_evt_param* **softap_channel**
Blufi callback param of ESP_BLUFI_EVENT_RECV_SOFTAP_CHANNEL

struct *esp_blufi_cb_param_t*::*blufi_recv_username_evt_param* **username**
Blufi callback param of ESP_BLUFI_EVENT_RECV_USERNAME

struct *esp_blufi_cb_param_t*::*blufi_recv_ca_evt_param* **ca**
Blufi callback param of ESP_BLUFI_EVENT_RECV_CA_CERT

struct *esp_blufi_cb_param_t*::*blufi_recv_client_cert_evt_param* **client_cert**
Blufi callback param of ESP_BLUFI_EVENT_RECV_CLIENT_CERT

struct *esp_blufi_cb_param_t*::*blufi_recv_server_cert_evt_param* **server_cert**
Blufi callback param of ESP_BLUFI_EVENT_RECV_SERVER_CERT

struct *esp_blufi_cb_param_t*::*blufi_recv_client_pkey_evt_param* **client_pkey**
Blufi callback param of ESP_BLUFI_EVENT_RECV_CLIENT_PRIV_KEY

struct *esp_blufi_cb_param_t*::*blufi_recv_server_pkey_evt_param* **server_pkey**
Blufi callback param of ESP_BLUFI_EVENT_RECV_SERVER_PRIV_KEY

struct *esp_blufi_cb_param_t*::*blufi_get_error_evt_param* **report_error**
Blufi callback param of ESP_BLUFI_EVENT_REPORT_ERROR

struct *esp_blufi_cb_param_t*::*blufi_recv_custom_data_evt_param* **custom_data**
Blufi callback param of ESP_BLUFI_EVENT_RECV_CUSTOM_DATA

struct blufi_connect_evt_param
#include <esp_blufi_api.h> ESP_BLUFI_EVENT_CONNECT.

Public Members

esp_blufi_bd_addr_t **remote_bda**
Blufi Remote bluetooth device address

uint8_t **server_if**
server interface

uint16_t **conn_id**
Connection id

struct blufi_deinit_finish_evt_param
#include <esp_blufi_api.h> ESP_BLUFI_EVENT_DEINIT_FINISH.

Public Members

esp_blufi_deinit_state_t **state**
De-initial status

struct blufi_disconnect_evt_param
#include <esp_blufi_api.h> ESP_BLUFI_EVENT_DISCONNECT.

Public Members

esp_blufi_bd_addr_t **remote_bda**
Blufi Remote bluetooth device address

struct blufi_get_error_evt_param
#include <esp_blufi_api.h> ESP_BLUFI_EVENT_REPORT_ERROR.

Public Members

esp_blufi_error_state_t **state**
Blufi error state

struct blufi_init_finish_evt_param
#include <esp_blufi_api.h> ESP_BLUFI_EVENT_INIT_FINISH.

Public Members

esp_blufi_init_state_t **state**
Initial status

struct blufi_recv_ca_evt_param
#include <esp_blufi_api.h> ESP_BLUFI_EVENT_RECV_CA_CERT.

Public Members

uint8_t ***cert**
CA certificate point

int **cert_len**
CA certificate length

struct blufi_recv_client_cert_evt_param
#include <esp_blufi_api.h> ESP_BLUFI_EVENT_RECV_CLIENT_CERT

Public Members

uint8_t ***cert**
Client certificate point

int **cert_len**
Client certificate length

struct blufi_recv_client_pkey_evt_param
#include <esp_blufi_api.h> ESP_BLUFI_EVENT_RECV_CLIENT_PRIV_KEY

Public Members

uint8_t ***pkey**
Client Private Key point, if Client certificate not contain Key

int **pkey_len**
Client Private key length

struct blufi_recv_custom_data_evt_param
#include <esp_blufi_api.h> ESP_BLUFI_EVENT_RECV_CUSTOM_DATA.

Public Members

uint8_t ***data**
Custom data

uint32_t **data_len**
Custom data Length

struct blufi_recv_server_cert_evt_param
#include <esp_blufi_api.h> ESP_BLUFI_EVENT_RECV_SERVER_CERT

Public Members

uint8_t ***cert**
Client certificate point

int **cert_len**
Client certificate length

struct blufi_recv_server_pkey_evt_param
#include <esp_blufi_api.h> ESP_BLUFI_EVENT_RECV_SERVER_PRIV_KEY

Public Members

uint8_t ***pkey**
Client Private Key point, if Client certificate not contain Key

int **pkey_len**
Client Private key length

struct blufi_recv_softap_auth_mode_evt_param
#include <esp_blufi_api.h> ESP_BLUFI_EVENT_RECV_SOFTAP_AUTH_MODE.

Public Members

wifi_auth_mode_t **auth_mode**
Authentication mode

struct blufi_recv_softap_channel_evt_param
#include <esp_blufi_api.h> ESP_BLUFI_EVENT_RECV_SOFTAP_CHANNEL.

Public Members

uint8_t **channel**
Authentication mode

struct blufi_recv_softap_max_conn_num_evt_param
#include <esp_blufi_api.h> ESP_BLUFI_EVENT_RECV_SOFTAP_MAX_CONN_NUM.

Public Members

int **max_conn_num**
SSID

struct blufi_recv_softap_passwd_evt_param
#include <esp_blufi_api.h> ESP_BLUFI_EVENT_RECV_SOFTAP_PASSWD.

Public Members

uint8_t *__passwd__
Password

int __passwd_len__
Password Length

__struct blufi_recv_softap_ssid_evt_param__
#include <esp_blufi_api.h> ESP_BLUFI_EVENT_RECV_SOFTAP_SSID.

Public Members

uint8_t *__ssid__
SSID

int __ssid_len__
SSID length

__struct blufi_recv_sta_bssid_evt_param__
#include <esp_blufi_api.h> ESP_BLUFI_EVENT_RECV_STA_BSSID.

Public Members

uint8_t __bssid__[6]
BSSID

__struct blufi_recv_sta_passwd_evt_param__
#include <esp_blufi_api.h> ESP_BLUFI_EVENT_RECV_STA_PASSWD.

Public Members

uint8_t *__passwd__
Password

int __passwd_len__
Password Length

__struct blufi_recv_sta_ssid_evt_param__
#include <esp_blufi_api.h> ESP_BLUFI_EVENT_RECV_STA_SSID.

Public Members

uint8_t *__ssid__
SSID

int __ssid_len__
SSID length

__struct blufi_recv_username_evt_param__
#include <esp_blufi_api.h> ESP_BLUFI_EVENT_RECV_USERNAME.

Public Members

uint8_t *__name__
Username point

int **name_len**
Username length

struct blufi_set_wifi_mode_evt_param
#include <esp_blufi_api.h> ESP_BLUFI_EVENT_SET_WIFI_MODE.

Public Members

wifi_mode_t **op_mode**
Wifi operation mode

Structures

struct esp_blufi_extra_info_t
BLUFI extra information structure.

Public Members

uint8_t **sta_bssid**[6]
BSSID of station interface

bool **sta_bssid_set**
is BSSID of station interface set

uint8_t ***sta_ssid**
SSID of station interface

int **sta_ssid_len**
length of SSID of station interface

uint8_t ***sta_passwd**
password of station interface

int **sta_passwd_len**
length of password of station interface

uint8_t ***softap_ssid**
SSID of softap interface

int **softap_ssid_len**
length of SSID of softap interface

uint8_t ***softap_passwd**
password of station interface

int **softap_passwd_len**
length of password of station interface

uint8_t **softap_authmode**
authentication mode of softap interface

bool **softap_authmode_set**
is authentication mode of softap interface set

uint8_t **softap_max_conn_num**
max connection number of softap interface

bool **softap_max_conn_num_set**
is max connection number of softap interface set

uint8_t **softap_channel**
channel of softap interface

bool **softap_channel_set**
is channel of softap interface set

uint8_t **sta_max_conn_retry**
max retry of sta establish connection

bool **sta_max_conn_retry_set**
is max retry of sta establish connection set

uint8_t **sta_conn_end_reason**
reason of sta connection end

bool **sta_conn_end_reason_set**
is reason of sta connection end set

int8_t **sta_conn_rssi**
rssi of sta connection

bool **sta_conn_rssi_set**
is rssi of sta connection set

struct esp_blufi_ap_record_t
Description of an WiFi AP.

Public Members

uint8_t **ssid**[33]
SSID of AP

int8_t **rssi**
signal strength of AP

struct esp_blufi_callbacks_t
BLUFI callback functions type.

Public Members

esp_blufi_event_cb_t **event_cb**
BLUFI event callback

esp_blufi_negotiate_data_handler_t **negotiate_data_handler**
BLUFI negotiate data function for negotiate share key

esp_blufi_encrypt_func_t **encrypt_func**
BLUFI encrypt data function with share key generated by negotiate_data_handler

esp_blufi_decrypt_func_t **decrypt_func**
BLUFI decrypt data function with share key generated by negotiate_data_handler

esp_blufi_checksum_func_t **checksum_func**
BLUFI check sum function (FCS)

Macros

ESP_BLUFI_BD_ADDR_LEN
Bluetooth address length.

Type Definitions

typedef uint8_t **esp_blufi_bd_addr_t**[**ESP_BLUFI_BD_ADDR_LEN**]
Bluetooth device address.

typedef void (***esp_blufi_event_cb_t**) (*esp_blufi_cb_event_t* event, *esp_blufi_cb_param_t* *param)
BLUFI event callback function type.

Parameters

- `event`: : Event type

- `param`: : Point to callback parameter, currently is union type

typedef void (***esp_blufi_negotiate_data_handler_t**)(uint8_t *data, int len, uint8_t **output_data, int *output_len, bool *need_free)

BLUFI negotiate data handler.

Parameters

- `data`: : data from phone
- `len`: : length of data from phone
- `output_data`: : data want to send to phone
- `output_len`: : length of data want to send to phone
- `need_free`: : output reporting if memory needs to be freed or not *

typedef int (***esp_blufi_encrypt_func_t**)(uint8_t iv8, uint8_t *crypt_data, int crypt_len)

BLUFI encrypt the data after negotiate a share key.

Return Nonnegative number is encrypted length, if error, return negative number;

Parameters

- `iv8`: : initial vector(8bit), normally, blufi core will input packet sequence number
- `crypt_data`: : plain text and encrypted data, the encrypt function must support autochthonous encrypt
- `crypt_len`: : length of plain text

typedef int (***esp_blufi_decrypt_func_t**)(uint8_t iv8, uint8_t *crypt_data, int crypt_len)

BLUFI decrypt the data after negotiate a share key.

Return Nonnegative number is decrypted length, if error, return negative number;

Parameters

- `iv8`: : initial vector(8bit), normally, blufi core will input packet sequence number
- `crypt_data`: : encrypted data and plain text, the encrypt function must support autochthonous decrypt
- `crypt_len`: : length of encrypted text

typedef uint16_t (***esp_blufi_checksum_func_t**)(uint8_t iv8, uint8_t *data, int len)

BLUFI checksum.

Parameters

- `iv8`: : initial vector(8bit), normally, blufi core will input packet sequence number
- `data`: : data need to checksum
- `len`: : length of data

Enumerations

enum esp_blufi_cb_event_t

Values:

ESP_BLUFI_EVENT_INIT_FINISH = 0

ESP_BLUFI_EVENT_DEINIT_FINISH

ESP_BLUFI_EVENT_SET_WIFI_OPMODE

ESP_BLUFI_EVENT_BLE_CONNECT

ESP_BLUFI_EVENT_BLE_DISCONNECT

ESP_BLUFI_EVENT_REQ_CONNECT_TO_AP

ESP_BLUFI_EVENT_REQ_DISCONNECT_FROM_AP

ESP_BLUFI_EVENT_GET_WIFI_STATUS

ESP_BLUFI_EVENT_DEAUTHENTICATE_STA

ESP_BLUFI_EVENT_RECV_STA_BSSID

ESP_BLUFI_EVENT_RECV_STA_SSID

ESP_BLUFI_EVENT_RECV_STA_PASSWD

ESP_BLUFI_EVENT_RECV_SOFTAP_SSID

ESP_BLUFI_EVENT_RECV_SOFTAP_PASSWD

ESP_BLUFI_EVENT_RECV_SOFTAP_MAX_CONN_NUM

ESP_BLUFI_EVENT_RECV_SOFTAP_AUTH_MODE

ESP_BLUFI_EVENT_RECV_SOFTAP_CHANNEL

ESP_BLUFI_EVENT_RECV_USERNAME

ESP_BLUFI_EVENT_RECV_CA_CERT

ESP_BLUFI_EVENT_RECV_CLIENT_CERT

ESP_BLUFI_EVENT_RECV_SERVER_CERT

ESP_BLUFI_EVENT_RECV_CLIENT_PRIV_KEY

ESP_BLUFI_EVENT_RECV_SERVER_PRIV_KEY

ESP_BLUFI_EVENT_RECV_SLAVE_DISCONNECT_BLE

ESP_BLUFI_EVENT_GET_WIFI_LIST

ESP_BLUFI_EVENT_REPORT_ERROR

ESP_BLUFI_EVENT_RECV_CUSTOM_DATA

enum esp_blufi_sta_conn_state_t

BLUFI config status.

Values:

ESP_BLUFI_STA_CONN_SUCCESS = 0x00

ESP_BLUFI_STA_CONN_FAIL = 0x01

ESP_BLUFI_STA_CONNECTING = 0x02

ESP_BLUFI_STA_NO_IP = 0x03

enum esp_blufi_init_state_t

BLUFI init status.

Values:

ESP_BLUFI_INIT_OK = 0

ESP_BLUFI_INIT_FAILED

enum esp_blufi_deinit_state_t

BLUFI deinit status.

Values:

ESP_BLUFI_DEINIT_OK = 0

ESP_BLUFI_DEINIT_FAILED

enum esp_blufi_error_state_t

Values:

ESP_BLUFI_SEQUENCE_ERROR = 0

ESP_BLUFI_CHECKSUM_ERROR

ESP_BLUFI_DECRYPT_ERROR

ESP_BLUFI_ENCRYPT_ERROR

ESP_BLUFI_INIT_SECURITY_ERROR

ESP_BLUFI_DH_MALLOC_ERROR

ESP_BLUFI_DH_PARAM_ERROR

ESP_BLUFI_READ_PARAM_ERROR

ESP_BLUFI_MAKE_PUBLIC_ERROR

ESP_BLUFI_DATA_FORMAT_ERROR

ESP_BLUFI_CALC_MD5_ERROR

ESP_BLUFI_WIFI_SCAN_FAIL

ESP_BLUFI_MSG_STATE_ERROR

2.1.4 CLASSIC BT

CLASSIC BLUETOOTH GAP API

API Reference

Header File

- bt/host/bluedroid/api/include/api/esp_gap_bt_api.h

Functions

static uint32_t **esp_bt_gap_get_cod_srvc**(uint32_t *cod*)
get major service field of COD

Return major service bits
Parameters
- `[in] cod`: Class of Device

static uint32_t **esp_bt_gap_get_cod_major_dev**(uint32_t *cod*)
get major device field of COD

Return major device bits
Parameters
- `[in] cod`: Class of Device

static uint32_t **esp_bt_gap_get_cod_minor_dev**(uint32_t *cod*)
get minor service field of COD

Return minor service bits
Parameters
- `[in] cod`: Class of Device

static uint32_t **esp_bt_gap_get_cod_format_type**(uint32_t *cod*)
get format type of COD

Return format type
Parameters
- `[in] cod`: Class of Device

static bool **esp_bt_gap_is_valid_cod**(uint32_t *cod*)
decide the integrity of COD

Return
- true if cod is valid
- false otherise

Parameters
- `[in] cod`: Class of Device

esp_err_t **esp_bt_gap_register_callback**(*esp_bt_gap_cb_t callback*)
register callback function. This function should be called after esp_bluedroid_enable() completes successfully

Return

- ESP_OK : Succeed
- ESP_FAIL: others

esp_err_t **esp_bt_gap_set_scan_mode**(*esp_bt_connection_mode_t c_mode*, *esp_bt_discovery_mode_t d_mode*)

Set discoverability and connectability mode for legacy bluetooth. This function should be called after esp_bluedroid_enable() completes successfully.

Return

- ESP_OK : Succeed
- ESP_ERR_INVALID_ARG: if argument invalid
- ESP_ERR_INVALID_STATE: if bluetooth stack is not yet enabled
- ESP_FAIL: others

Parameters

- `[in] c_mode`: : one of the enums of esp_bt_connection_mode_t
- `[in] d_mode`: : one of the enums of esp_bt_discovery_mode_t

esp_err_t **esp_bt_gap_start_discovery**(*esp_bt_inq_mode_t mode*, uint8_t *inq_len*, uint8_t *num_rsps*)

This function starts Inquiry and Name Discovery. This function should be called after esp_bluedroid_enable() completes successfully. When Inquiry is halted and cached results do not contain device name, then Name Discovery will connect to the peer target to get the device name. esp_bt_gap_cb_t will be called with ESP_BT_GAP_DISC_STATE_CHANGED_EVT when Inquriry is started or Name Discovery is completed. esp_bt_gap_cb_t will be called with ESP_BT_GAP_DISC_RES_EVT each time the two types of discovery results are got.

Return

- ESP_OK : Succeed
- ESP_ERR_INVALID_STATE: if bluetooth stack is not yet enabled
- ESP_ERR_INVALID_ARG: if invalid parameters are provided
- ESP_FAIL: others

Parameters

- `[in] mode`: - Inquiry mode
- `[in] inq_len`: - Inquiry duration in 1.28 sec units, ranging from 0x01 to 0x30. This parameter only specifies the total duration of the Inquiry process,
  - when this time expires, Inquiry will be halted.
- `[in] num_rsps`: - Number of responses that can be received before the Inquiry is halted, value 0 indicates an unlimited number of responses.

esp_err_t **esp_bt_gap_cancel_discovery**(void)

Cancel Inquiry and Name Discovery. This function should be called after esp_bluedroid_enable() completes successfully. esp_bt_gap_cb_t will be called with ESP_BT_GAP_DISC_STATE_CHANGED_EVT if Inquiry or Name Discovery is cancelled by calling this function.

Return

- ESP_OK : Succeed
- ESP_ERR_INVALID_STATE: if bluetooth stack is not yet enabled
- ESP_FAIL: others

esp_err_t **esp_bt_gap_get_remote_services**(*esp_bd_addr_t remote_bda*)

Start SDP to get remote services. This function should be called after esp_bluedroid_enable() completes successfully. esp_bt_gap_cb_t will be called with ESP_BT_GAP_RMT_SRVCS_EVT after service discovery ends.

Return

- ESP_OK : Succeed
- ESP_ERR_INVALID_STATE: if bluetooth stack is not yet enabled
- ESP_FAIL: others

esp_err_t **esp_bt_gap_get_remote_service_record**(*esp_bd_addr_t remote_bda*, *esp_bt_uuid_t *uuid*)

Start SDP to look up the service matching uuid on the remote device. This function should be called after

esp_bluedroid_enable() completes successfully.

esp_bt_gap_cb_t will be called with ESP_BT_GAP_RMT_SRVC_REC_EVT after service discovery ends

Return
- ESP_OK : Succeed
- ESP_ERR_INVALID_STATE: if bluetooth stack is not yet enabled
- ESP_FAIL: others

uint8_t *__esp_bt_gap_resolve_eir_data__(uint8_t *_eir_, _esp_bt_eir_type_t_ _type_, uint8_t *_length_)

This function is called to get EIR data for a specific type.

Return pointer of starting position of eir data excluding eir data type, NULL if not found

Parameters
- `[in] eir`: - pointer of raw eir data to be resolved
- `[in] type`: - specific EIR data type
- `[out] length`: - return the length of EIR data excluding fields of length and data type

esp_err_t __esp_bt_gap_config_eir_data__(*esp_bt_eir_data_t* *_eir_data_)

This function is called to config EIR data.

esp_bt_gap_cb_t will be called with ESP_BT_GAP_CONFIG_EIR_DATA_EVT after config EIR ends.

Return
- ESP_OK : Succeed
- ESP_ERR_INVALID_STATE: if bluetooth stack is not yet enabled
- ESP_ERR_INVALID_ARG: if param is invalid
- ESP_FAIL: others

Parameters
- `[in] eir_data`: - pointer of EIR data content

esp_err_t __esp_bt_gap_set_cod__(*esp_bt_cod_t* _cod_, *esp_bt_cod_mode_t* _mode_)

This function is called to set class of device. The structure esp_bt_gap_cb_t will be called with ESP_BT_GAP_SET_COD_EVT after set COD ends. This function should be called after Bluetooth profiles are initialized, otherwise the user configured class of device can be overwritten. Some profiles have special restrictions on class of device, and changes may make these profiles unable to work.

Return
- ESP_OK : Succeed
- ESP_ERR_INVALID_STATE: if bluetooth stack is not yet enabled
- ESP_ERR_INVALID_ARG: if param is invalid
- ESP_FAIL: others

Parameters
- `[in] cod`: - class of device
- `[in] mode`: - setting mode

esp_err_t __esp_bt_gap_get_cod__(*esp_bt_cod_t* *_cod_)

This function is called to get class of device.

Return
- ESP_OK : Succeed
- ESP_FAIL: others

Parameters
- `[out] cod`: - class of device

esp_err_t __esp_bt_gap_read_rssi_delta__(*esp_bd_addr_t* _remote_addr_)

This function is called to read RSSI delta by address after connected. The RSSI value returned by ESP_BT_GAP_READ_RSSI_DELTA_EVT.

Return
- ESP_OK : Succeed
- ESP_FAIL: others

Parameters
- `[in] remote_addr`: - remote device address, corresponding to a certain connection handle

esp_err_t **esp_bt_gap_remove_bond_device**(*esp_bd_addr_t bd_addr*)

Removes a device from the security database list of peer device.

Return - ESP_OK : success
- ESP_FAIL : failed

Parameters
- `[in] bd_addr`: : BD address of the peer device

int **esp_bt_gap_get_bond_device_num**(void)

Get the device number from the security database list of peer device. It will return the device bonded number immediately.

Return - >= 0 : bonded devices number
- ESP_FAIL : failed

esp_err_t **esp_bt_gap_get_bond_device_list**(int **dev_num*, *esp_bd_addr_t *dev_list*)

Get the device from the security database list of peer device. It will return the device bonded information immediately.

Return
- ESP_OK : Succeed
- ESP_ERR_INVALID_STATE: if bluetooth stack is not yet enabled
- ESP_FAIL: others

Parameters
- `[inout] dev_num`: Indicate the dev_list array(buffer) size as input. If dev_num is large enough, it means the actual number as output. Suggest that dev_num value equal to esp_ble_get_bond_device_num().
- `[out] dev_list`: an array(buffer) of `esp_bd_addr_t` type. Use for storing the bonded devices address. The dev_list should be allocated by who call this API.

esp_err_t **esp_bt_gap_set_pin**(*esp_bt_pin_type_t pin_type*, uint8_t *pin_code_len*, *esp_bt_pin_code_t pin_code*)

Set pin type and default pin code for legacy pairing.

Return - ESP_OK : success
- ESP_ERR_INVALID_STATE: if bluetooth stack is not yet enabled
- other : failed

Parameters
- `[in] pin_type`: Use variable or fixed pin. If pin_type is ESP_BT_PIN_TYPE_VARIABLE, pin_code and pin_code_len will be ignored, and ESP_BT_GAP_PIN_REQ_EVT will come when control requests for pin code. Else, will use fixed pin code and not callback to users.
- `[in] pin_code_len`: Length of pin_code
- `[in] pin_code`: Pin_code

esp_err_t **esp_bt_gap_pin_reply**(*esp_bd_addr_t bd_addr*, bool *accept*, uint8_t *pin_code_len*, *esp_bt_pin_code_t pin_code*)

Reply the pin_code to the peer device for legacy pairing when ESP_BT_GAP_PIN_REQ_EVT is coming.

Return - ESP_OK : success
- ESP_ERR_INVALID_STATE: if bluetooth stack is not yet enabled
- other : failed

Parameters
- `[in] bd_addr`: BD address of the peer
- `[in] accept`: Pin_code reply successful or declined.
- `[in] pin_code_len`: Length of pin_code
- `[in] pin_code`: Pin_code

esp_err_t **esp_bt_gap_set_security_param**(*esp_bt_sp_param_t param_type*, void **value*, uint8_t *len*)

Set a GAP security parameter value. Overrides the default value.

Return - ESP_OK : success
- ESP_ERR_INVALID_STATE: if bluetooth stack is not yet enabled
- other : failed

Parameters

- `[in] param_type`: : the type of the param which is to be set
- `[in] value`: : the param value
- `[in] len`: : the length of the param value

esp_err_t **esp_bt_gap_ssp_passkey_reply**(*esp_bd_addr_t bd_addr*, bool *accept*, uint32_t *passkey*)

Reply the key value to the peer device in the legacy connection stage.

Return - ESP_OK : success

- ESP_ERR_INVALID_STATE: if bluetooth stack is not yet enabled
- other : failed

Parameters

- `[in] bd_addr`: : BD address of the peer
- `[in] accept`: : passkey entry successful or declined.
- `[in] passkey`: : passkey value, must be a 6 digit number, can be lead by 0.

esp_err_t **esp_bt_gap_ssp_confirm_reply**(*esp_bd_addr_t bd_addr*, bool *accept*)

Reply the confirm value to the peer device in the legacy connection stage.

Return - ESP_OK : success

- ESP_ERR_INVALID_STATE: if bluetooth stack is not yet enabled
- other : failed

Parameters

- `[in] bd_addr`: : BD address of the peer device
- `[in] accept`: : numbers to compare are the same or different

esp_err_t **esp_bt_gap_set_afh_channels**(*esp_bt_gap_afh_channels channels*)

Set the AFH channels.

Return - ESP_OK : success

- ESP_ERR_INVALID_STATE: if bluetooth stack is not yet enabled
- other : failed

Parameters

- `[in] channels`: : The n th such field (in the range 0 to 78) contains the value for channel n : 0 means channel n is bad. 1 means channel n is unknown. The most significant bit is reserved and shall be set to 0. At least 20 channels shall be marked as unknown.

esp_err_t **esp_bt_gap_read_remote_name**(*esp_bd_addr_t remote_bda*)

Read the remote device name.

Return - ESP_OK : success

- ESP_ERR_INVALID_STATE: if bluetooth stack is not yet enabled
- other : failed

Parameters

- `[in] remote_bda`: The remote device’ s address

esp_err_t **esp_bt_gap_set_qos**(*esp_bd_addr_t remote_bda*, uint32_t *t_poll*)

Config Quality of service.

Return - ESP_OK : success

- ESP_ERR_INVALID_STATE: if bluetooth stack is not yet enabled
- other : failed

Parameters

- `[in] remote_bda`: The remote device’ s address
- `[in] t_poll`: Poll interval, the maximum time between transmissions which from the master to a particular slave on the ACL logical transport. unit is 0.625ms

Unions

union esp_bt_gap_cb_param_t

#include <esp_gap_bt_api.h> GAP state callback parameters.

Public Members

struct *esp_bt_gap_cb_param_t*::*disc_res_param* **disc_res**
discovery result parameter struct

struct *esp_bt_gap_cb_param_t*::*disc_state_changed_param* **disc_st_chg**
discovery state changed parameter struct

struct *esp_bt_gap_cb_param_t*::*rmt_srvcs_param* **rmt_srvcs**
services of remote device parameter struct

struct *esp_bt_gap_cb_param_t*::*rmt_srvc_rec_param* **rmt_srvc_rec**
specific service record from remote device parameter struct

struct *esp_bt_gap_cb_param_t*::*read_rssi_delta_param* **read_rssi_delta**
read rssi parameter struct

struct *esp_bt_gap_cb_param_t*::*config_eir_data_param* **config_eir_data**
config EIR data

struct *esp_bt_gap_cb_param_t*::*auth_cmpl_param* **auth_cmpl**
authentication complete parameter struct

struct *esp_bt_gap_cb_param_t*::*pin_req_param* **pin_req**
pin request parameter struct

struct *esp_bt_gap_cb_param_t*::*cfm_req_param* **cfm_req**
confirm request parameter struct

struct *esp_bt_gap_cb_param_t*::*key_notif_param* **key_notif**
passkey notif parameter struct

struct *esp_bt_gap_cb_param_t*::*key_req_param* **key_req**
passkey request parameter struct

struct *esp_bt_gap_cb_param_t*::*set_afh_channels_param* **set_afh_channels**
set AFH channel parameter struct

struct *esp_bt_gap_cb_param_t*::*read_rmt_name_param* **read_rmt_name**
read Remote Name parameter struct

struct *esp_bt_gap_cb_param_t*::*mode_chg_param* **mode_chg**
mode change event parameter struct

struct *esp_bt_gap_cb_param_t*::*bt_remove_bond_dev_cmpl_evt_param* **remove_bond_dev_cmpl**
Event parameter of ESP_BT_GAP_REMOVE_BOND_DEV_COMPLETE_EVT

struct *esp_bt_gap_cb_param_t*::*qos_cmpl_param* **qos_cmpl**
QoS complete parameter struct

struct *esp_bt_gap_cb_param_t*::*acl_conn_cmpl_stat_param* **acl_conn_cmpl_stat**
ACL connection complete status parameter struct

struct *esp_bt_gap_cb_param_t*::*acl_disconn_cmpl_stat_param* **acl_disconn_cmpl_stat**
ACL disconnection complete status parameter struct

struct acl_conn_cmpl_stat_param
#include <esp_gap_bt_api.h> ESP_BT_GAP_ACL_CONN_CMPL_STAT_EVT.

Public Members

esp_bt_status_t **stat**
ACL connection status

uint16_t **handle**
ACL connection handle

esp_bd_addr_t **bda**
remote bluetooth device address

struct acl_disconn_cmpl_stat_param
#include <esp_gap_bt_api.h> ESP_BT_GAP_ACL_DISCONN_CMPL_STAT_EVT.

Public Members

esp_bt_status_t **reason**
ACL disconnection reason

uint16_t **handle**
ACL connection handle

esp_bd_addr_t **bda**
remote bluetooth device address

struct auth_cmpl_param
#include <esp_gap_bt_api.h> ESP_BT_GAP_AUTH_CMPL_EVT.

Public Members

esp_bd_addr_t **bda**
remote bluetooth device address

esp_bt_status_t **stat**
authentication complete status

uint8_t **device_name**[**ESP_BT_GAP_MAX_BDNAME_LEN** + 1]
device name

struct bt_remove_bond_dev_cmpl_evt_param
#include <esp_gap_bt_api.h> ESP_BT_GAP_REMOVE_BOND_DEV_COMPLETE_EVT.

Public Members

esp_bd_addr_t **bda**
remote bluetooth device address

esp_bt_status_t **status**
Indicate the remove bond device operation success status

struct cfm_req_param
#include <esp_gap_bt_api.h> ESP_BT_GAP_CFM_REQ_EVT.

Public Members

esp_bd_addr_t **bda**
remote bluetooth device address

uint32_t **num_val**
the numeric value for comparison.

struct config_eir_data_param
#include <esp_gap_bt_api.h> ESP_BT_GAP_CONFIG_EIR_DATA_EVT *.

Public Members

esp_bt_status_t **stat**
config EIR status: ESP_BT_STATUS_SUCCESS: config success ESP_BT_STATUS_EIR_TOO_LARGE: the EIR data is more than 240B. The EIR may not contain the whole data. others: failed

uint8_t **eir_type_num**
the number of EIR types in EIR type

esp_bt_eir_type_t **eir_type**[**ESP_BT_EIR_TYPE_MAX_NUM**]
EIR types in EIR type

struct disc_res_param
#include <esp_gap_bt_api.h> ESP_BT_GAP_DISC_RES_EVT.

Public Members

esp_bd_addr_t **bda**
remote bluetooth device address

int **num_prop**
number of properties got

esp_bt_gap_dev_prop_t ***prop**
properties discovered from the new device

struct disc_state_changed_param
#include <esp_gap_bt_api.h> ESP_BT_GAP_DISC_STATE_CHANGED_EVT.

Public Members

esp_bt_gap_discovery_state_t **state**
discovery state

struct key_notif_param
#include <esp_gap_bt_api.h> ESP_BT_GAP_KEY_NOTIF_EVT.

Public Members

esp_bd_addr_t **bda**
remote bluetooth device address

uint32_t **passkey**
the numeric value for passkey entry.

struct key_req_param
#include <esp_gap_bt_api.h> ESP_BT_GAP_KEY_REQ_EVT.

Public Members

esp_bd_addr_t **bda**
remote bluetooth device address

struct mode_chg_param
#include <esp_gap_bt_api.h> ESP_BT_GAP_MODE_CHG_EVT.

Public Members

esp_bd_addr_t **bda**
remote bluetooth device address

esp_bt_pm_mode_t **mode**
PM mode

struct pin_req_param
#include <esp_gap_bt_api.h> ESP_BT_GAP_PIN_REQ_EVT.

Public Members

esp_bd_addr_t **bda**
remote bluetooth device address

bool **min_16_digit**
TRUE if the pin returned must be at least 16 digits

struct qos_cmpl_param
#include <esp_gap_bt_api.h> ESP_BT_GAP_QOS_CMPL_EVT.

Public Members

esp_bt_status_t **stat**
QoS status

esp_bd_addr_t **bda**
remote bluetooth device address

uint32_t **t_poll**
poll interval, the maximum time between transmissions which from the master to a particular slave on the ACL logical transport. unit is 0.625ms.

struct read_rmt_name_param
#include <esp_gap_bt_api.h> ESP_BT_GAP_READ_REMOTE_NAME_EVT.

Public Members

esp_bt_status_t **stat**
read Remote Name status

uint8_t **rmt_name**[**ESP_BT_GAP_MAX_BDNAME_LEN** + 1]
Remote device name

esp_bd_addr_t **bda**
remote bluetooth device address

struct read_rssi_delta_param
#include <esp_gap_bt_api.h> ESP_BT_GAP_READ_RSSI_DELTA_EVT *.

Public Members

esp_bd_addr_t **bda**
remote bluetooth device address

esp_bt_status_t **stat**
read rssi status

int8_t **rssi_delta**
rssi delta value range -128 ~127, The value zero indicates that the RSSI is inside the Golden Receive Power Range, the Golden Receive Power Range is from ESP_BT_GAP_RSSI_LOW_THRLD to ESP_BT_GAP_RSSI_HIGH_THRLD

struct rmt_srvc_rec_param
#include <esp_gap_bt_api.h> ESP_BT_GAP_RMT_SRVC_REC_EVT.

Public Members

esp_bd_addr_t **bda**
remote bluetooth device address

esp_bt_status_t **stat**
service search status

struct rmt_srvcs_param
#include <esp_gap_bt_api.h> ESP_BT_GAP_RMT_SRVCS_EVT.

Public Members

esp_bd_addr_t **bda**
remote bluetooth device address

esp_bt_status_t **stat**
service search status

int **num_uuids**
number of UUID in uuid_list

esp_bt_uuid_t ***uuid_list**
list of service UUIDs of remote device

struct set_afh_channels_param
#include <esp_gap_bt_api.h> ESP_BT_GAP_SET_AFH_CHANNELS_EVT.

Public Members

esp_bt_status_t **stat**
set AFH channel status

Structures

struct esp_bt_cod_t
Class of device.

Public Members

uint32_t **reserved_2** : 2
undefined

uint32_t **minor** : 6
minor class

uint32_t **major** : 5
major class

uint32_t **service** : 11
service class

uint32_t **reserved_8** : 8
undefined

struct esp_bt_gap_dev_prop_t
Bluetooth Device Property Descriptor.

Public Members

esp_bt_gap_dev_prop_type_t **type**
Device property type

int **len**
Device property value length

void ***val**
Device property value

struct esp_bt_eir_data_t
EIR data content, according to "Supplement to the Bluetooth Core Specification".

Public Members

bool **fec_required**
FEC is required or not, true by default

bool **include_txpower**
EIR data include TX power, false by default

bool **include_uuid**
EIR data include UUID, false by default

uint8_t **flag**
EIR flags, see ESP_BT_EIR_FLAG for details, EIR will not include flag if it is 0, 0 by default

uint16_t **manufacturer_len**
Manufacturer data length, 0 by default

uint8_t ***p_manufacturer_data**
Manufacturer data point

uint16_t **url_len**
URL length, 0 by default

uint8_t ***p_url**
URL point

Macros

ESP_BT_GAP_RSSI_HIGH_THRLD
RSSI threshold.

High RSSI threshold

ESP_BT_GAP_RSSI_LOW_THRLD
Low RSSI threshold

ESP_BT_GAP_AFH_CHANNELS_LEN

ESP_BT_GAP_MAX_BDNAME_LEN
Maximum bytes of Bluetooth device name.

ESP_BT_GAP_EIR_DATA_LEN
Maximum size of EIR Significant part.

ESP_BT_EIR_TYPE_FLAGS
Extended Inquiry Response data type.

Flag with information such as BR/EDR and LE support

ESP_BT_EIR_TYPE_INCMPL_16BITS_UUID
Incomplete list of 16-bit service UUIDs

ESP_BT_EIR_TYPE_CMPL_16BITS_UUID
Complete list of 16-bit service UUIDs

ESP_BT_EIR_TYPE_INCMPL_32BITS_UUID
Incomplete list of 32-bit service UUIDs

ESP_BT_EIR_TYPE_CMPL_32BITS_UUID
Complete list of 32-bit service UUIDs

ESP_BT_EIR_TYPE_INCMPL_128BITS_UUID
Incomplete list of 128-bit service UUIDs

ESP_BT_EIR_TYPE_CMPL_128BITS_UUID
Complete list of 128-bit service UUIDs

ESP_BT_EIR_TYPE_SHORT_LOCAL_NAME
Shortened Local Name

ESP_BT_EIR_TYPE_CMPL_LOCAL_NAME
Complete Local Name

ESP_BT_EIR_TYPE_TX_POWER_LEVEL
Tx power level, value is 1 octet ranging from -127 to 127, unit is dBm

ESP_BT_EIR_TYPE_URL
Uniform resource identifier

ESP_BT_EIR_TYPE_MANU_SPECIFIC
Manufacturer specific data

ESP_BT_EIR_TYPE_MAX_NUM
MAX number of EIR type

ESP_BT_EIR_FLAG_LIMIT_DISC

ESP_BT_EIR_FLAG_GEN_DISC

ESP_BT_EIR_FLAG_BREDR_NOT_SPT

ESP_BT_EIR_FLAG_DMT_CONTROLLER_SPT

ESP_BT_EIR_FLAG_DMT_HOST_SPT

ESP_BT_EIR_MAX_LEN

ESP_BT_PIN_CODE_LEN
Max pin code length

ESP_BT_IO_CAP_OUT

ESP_BT_IO_CAP_IO

ESP_BT_IO_CAP_IN

ESP_BT_IO_CAP_NONE

ESP_BT_PM_MD_ACTIVE
Active mode

ESP_BT_PM_MD_HOLD
Hold mode

ESP_BT_PM_MD_SNIFF
Sniff mode

ESP_BT_PM_MD_PARK
Park state

ESP_BT_COD_SRVC_BIT_MASK
Bits of major service class field.

Major service bit mask

ESP_BT_COD_SRVC_BIT_OFFSET
Major service bit offset

ESP_BT_COD_MAJOR_DEV_BIT_MASK
Bits of major device class field.

Major device bit mask

ESP_BT_COD_MAJOR_DEV_BIT_OFFSET
Major device bit offset

ESP_BT_COD_MINOR_DEV_BIT_MASK
Bits of minor device class field.

Minor device bit mask

ESP_BT_COD_MINOR_DEV_BIT_OFFSET
Minor device bit offset

ESP_BT_COD_FORMAT_TYPE_BIT_MASK
Bits of format type.

Format type bit mask

ESP_BT_COD_FORMAT_TYPE_BIT_OFFSET
Format type bit offset

ESP_BT_COD_FORMAT_TYPE_1
Class of device format type 1.

ESP_BT_GAP_MIN_INQ_LEN
Minimum and Maximum inquiry length Minimum inquiry duration, unit is 1.28s

ESP_BT_GAP_MAX_INQ_LEN
Maximum inquiry duration, unit is 1.28s

Type Definitions

typedef uint8_t **esp_bt_gap_afh_channels**[**ESP_BT_GAP_AFH_CHANNELS_LEN**]

typedef uint8_t **esp_bt_eir_type_t**

typedef uint8_t **esp_bt_pin_code_t**[**ESP_BT_PIN_CODE_LEN**]
Pin Code (upto 128 bits) MSB is 0

typedef uint8_t **esp_bt_io_cap_t**
Combination of the IO Capability

typedef uint8_t **esp_bt_pm_mode_t**

typedef void (***esp_bt_gap_cb_t**)(*esp_bt_gap_cb_event_t* event, *esp_bt_gap_cb_param_t* *param)
bluetooth GAP callback function type

Parameters
- `event`: : Event type
- `param`: : Pointer to callback parameter

Enumerations

enum esp_bt_cod_mode_t

class of device settings

Values:

ESP_BT_SET_COD_MAJOR_MINOR = 0x01
overwrite major, minor class

ESP_BT_SET_COD_SERVICE_CLASS = 0x02
set the bits in the input, the current bit will remain

ESP_BT_CLR_COD_SERVICE_CLASS = 0x04
clear the bits in the input, others will remain

ESP_BT_SET_COD_ALL = 0x08
overwrite major, minor, set the bits in service class

ESP_BT_INIT_COD = 0x0a
overwrite major, minor, and service class

enum esp_bt_connection_mode_t

Discoverability and Connectability mode.

Values:

ESP_BT_NON_CONNECTABLE
Non-connectable

ESP_BT_CONNECTABLE
Connectable

enum esp_bt_discovery_mode_t

Values:

ESP_BT_NON_DISCOVERABLE
Non-discoverable

ESP_BT_LIMITED_DISCOVERABLE
Limited Discoverable

ESP_BT_GENERAL_DISCOVERABLE
General Discoverable

enum esp_bt_gap_dev_prop_type_t

Bluetooth Device Property type.

Values:

ESP_BT_GAP_DEV_PROP_BDNAME = 1
Bluetooth device name, value type is int8_t []

ESP_BT_GAP_DEV_PROP_COD
Class of Device, value type is uint32_t

ESP_BT_GAP_DEV_PROP_RSSI
Received Signal strength Indication, value type is int8_t, ranging from -128 to 127

ESP_BT_GAP_DEV_PROP_EIR
Extended Inquiry Response, value type is uint8_t []

enum esp_bt_cod_srvc_t

Major service class field of Class of Device, mutiple bits can be set.

Values:

ESP_BT_COD_SRVC_NONE = 0
None indicates an invalid value

ESP_BT_COD_SRVC_LMTD_DISCOVER = 0x1
Limited Discoverable Mode

ESP_BT_COD_SRVC_POSITIONING = 0x8
Positioning (Location identification)

ESP_BT_COD_SRVC_NETWORKING = 0x10
Networking, e.g. LAN, Ad hoc

ESP_BT_COD_SRVC_RENDERING = 0x20
Rendering, e.g. Printing, Speakers

ESP_BT_COD_SRVC_CAPTURING = 0x40
Capturing, e.g. Scanner, Microphone

ESP_BT_COD_SRVC_OBJ_TRANSFER = 0x80
Object Transfer, e.g. v-Inbox, v-Folder

ESP_BT_COD_SRVC_AUDIO = 0x100
Audio, e.g. Speaker, Microphone, Headset service

ESP_BT_COD_SRVC_TELEPHONY = 0x200
Telephony, e.g. Cordless telephony, Modem, Headset service

ESP_BT_COD_SRVC_INFORMATION = 0x400
Information, e.g., WEB-server, WAP-server

enum esp_bt_pin_type_t
Values:

ESP_BT_PIN_TYPE_VARIABLE = 0
Refer to BTM_PIN_TYPE_VARIABLE

ESP_BT_PIN_TYPE_FIXED = 1
Refer to BTM_PIN_TYPE_FIXED

enum esp_bt_sp_param_t
Values:

ESP_BT_SP_IOCAP_MODE = 0
Set IO mode

enum esp_bt_cod_major_dev_t
Major device class field of Class of Device.

Values:

ESP_BT_COD_MAJOR_DEV_MISC = 0
Miscellaneous

ESP_BT_COD_MAJOR_DEV_COMPUTER = 1
Computer

ESP_BT_COD_MAJOR_DEV_PHONE = 2
Phone(cellular, cordless, pay phone, modem

ESP_BT_COD_MAJOR_DEV_LAN_NAP = 3
LAN, Network Access Point

ESP_BT_COD_MAJOR_DEV_AV = 4
Audio/Video(headset, speaker, stereo, video display, VCR

ESP_BT_COD_MAJOR_DEV_PERIPHERAL = 5
Peripheral(mouse, joystick, keyboard)

ESP_BT_COD_MAJOR_DEV_IMAGING = 6
Imaging(printer, scanner, camera, display

ESP_BT_COD_MAJOR_DEV_WEARABLE = 7
Wearable

ESP_BT_COD_MAJOR_DEV_TOY = 8
Toy

ESP_BT_COD_MAJOR_DEV_HEALTH = 9
Health

ESP_BT_COD_MAJOR_DEV_UNCATEGORIZED = 31
Uncategorized: device not specified

enum esp_bt_gap_discovery_state_t
Bluetooth Device Discovery state

Values:

ESP_BT_GAP_DISCOVERY_STOPPED
Device discovery stopped

ESP_BT_GAP_DISCOVERY_STARTED
Device discovery started

enum esp_bt_gap_cb_event_t
BT GAP callback events.

Values:

ESP_BT_GAP_DISC_RES_EVT = 0
Device discovery result event

ESP_BT_GAP_DISC_STATE_CHANGED_EVT
Discovery state changed event

ESP_BT_GAP_RMT_SRVCS_EVT
Get remote services event

ESP_BT_GAP_RMT_SRVC_REC_EVT
Get remote service record event

ESP_BT_GAP_AUTH_CMPL_EVT
Authentication complete event

ESP_BT_GAP_PIN_REQ_EVT
Legacy Pairing Pin code request

ESP_BT_GAP_CFM_REQ_EVT
Security Simple Pairing User Confirmation request.

ESP_BT_GAP_KEY_NOTIF_EVT
Security Simple Pairing Passkey Notification

ESP_BT_GAP_KEY_REQ_EVT
Security Simple Pairing Passkey request

ESP_BT_GAP_READ_RSSI_DELTA_EVT
Read rssi event

ESP_BT_GAP_CONFIG_EIR_DATA_EVT
Config EIR data event

ESP_BT_GAP_SET_AFH_CHANNELS_EVT
Set AFH channels event

ESP_BT_GAP_READ_REMOTE_NAME_EVT
Read Remote Name event

ESP_BT_GAP_MODE_CHG_EVT

ESP_BT_GAP_REMOVE_BOND_DEV_COMPLETE_EVT
remove bond device complete event

ESP_BT_GAP_QOS_CMPL_EVT
QOS complete event

ESP_BT_GAP_ACL_CONN_CMPL_STAT_EVT
ACL connection complete status event

ESP_BT_GAP_ACL_DISCONN_CMPL_STAT_EVT
ACL disconnection complete status event

ESP_BT_GAP_EVT_MAX

enum esp_bt_inq_mode_t
Inquiry Mode

Values:

ESP_BT_INQ_MODE_GENERAL_INQUIRY
General inquiry mode

ESP_BT_INQ_MODE_LIMITED_INQUIRY
Limited inquiry mode

Bluetooth A2DP API

Application Example Check bluetooth/bluedroid/classic_bt folder in ESP-IDF examples, which contains the following application:

- This is a A2DP sink client demo. This demo can be discovered and connected by A2DP source device and receive the audio stream from remote device - bluetooth/bluedroid/classic_bt/a2dp_sink

API Reference

Header File

- bt/host/bluedroid/api/include/api/esp_a2dp_api.h

Functions

esp_err_t **esp_a2d_register_callback**(*esp_a2d_cb_t callback*)
Register application callback function to A2DP module. This function should be called only after esp_bluedroid_enable() completes successfully, used by both A2DP source and sink.

Return
- ESP_OK: success
- ESP_INVALID_STATE: if bluetooth stack is not yet enabled
- ESP_FAIL: if callback is a NULL function pointer

Parameters
- `[in] callback`: A2DP event callback function

esp_err_t **esp_a2d_sink_register_data_callback**(*esp_a2d_sink_data_cb_t callback*)
Register A2DP sink data output function; For now the output is PCM data stream decoded from SBC format. This function should be called only after esp_bluedroid_enable() completes successfully, used only by A2DP sink. The callback is invoked in the context of A2DP sink task whose stack size is configurable through menuconfig.

Return
- ESP_OK: success
- ESP_INVALID_STATE: if bluetooth stack is not yet enabled
- ESP_FAIL: if callback is a NULL function pointer

Parameters
- `[in] callback`: A2DP sink data callback function

esp_err_t **esp_a2d_sink_init**(void)
Initialize the bluetooth A2DP sink module. This function should be called after esp_bluedroid_enable() completes successfully, and ESP_A2D_PROF_STATE_EVT with ESP_A2D_INIT_SUCCESS will reported to

the APP layer. Note: A2DP can work independently. If you want to use AVRC together, you should initiate AVRC first. This function should be called after esp_bluedroid_enable() completes successfully.

Return

- ESP_OK: if the initialization request is sent successfully
- ESP_INVALID_STATE: if bluetooth stack is not yet enabled
- ESP_FAIL: others

esp_err_t **esp_a2d_sink_deinit** (void)

De-initialize for A2DP sink module. This function should be called only after esp_bluedroid_enable() completes successfully, and ESP_A2D_PROF_STATE_EVT with ESP_A2D_DEINIT_SUCCESS will reported to APP layer.

Return

- ESP_OK: if the deinitialization request is sent successfully
- ESP_INVALID_STATE: if bluetooth stack is not yet enabled
- ESP_FAIL: others

esp_err_t **esp_a2d_sink_connect** (*esp_bd_addr_t remote_bda*)

Connect to remote bluetooth A2DP source device. This API must be called after esp_a2d_sink_init() and before esp_a2d_sink_deinit().

Return

- ESP_OK: connect request is sent to lower layer successfully
- ESP_INVALID_STATE: if bluetooth stack is not yet enabled
- ESP_FAIL: others

Parameters

- `[in] remote_bda`: remote bluetooth device address

esp_err_t **esp_a2d_sink_disconnect** (*esp_bd_addr_t remote_bda*)

Disconnect from the remote A2DP source device. This API must be called after esp_a2d_sink_init() and before esp_a2d_sink_deinit().

Return

- ESP_OK: disconnect request is sent to lower layer successfully
- ESP_INVALID_STATE: if bluetooth stack is not yet enabled
- ESP_FAIL: others

Parameters

- `[in] remote_bda`: remote bluetooth device address

esp_err_t **esp_a2d_media_ctrl** (*esp_a2d_media_ctrl_t ctrl*)

Media control commands. This API can be used for both A2DP sink and source and must be called after esp_a2d_sink_init() and before esp_a2d_sink_deinit().

Return

- ESP_OK: control command is sent to lower layer successfully
- ESP_INVALID_STATE: if bluetooth stack is not yet enabled
- ESP_FAIL: others

Parameters

- `[in] ctrl`: control commands for A2DP data channel

esp_err_t **esp_a2d_source_init** (void)

Initialize the bluetooth A2DP source module. A2DP can work independently. If you want to use AVRC together, you should initiate AVRC first. This function should be called after esp_bluedroid_enable() completes successfully, and ESP_A2D_PROF_STATE_EVT with ESP_A2D_INIT_SUCCESS will reported to the APP layer. Note: A2DP can work independently. If you want to use AVRC together, you should initiate AVRC first.

Return

- ESP_OK: if the initialization request is sent to lower layer successfully
- ESP_INVALID_STATE: if bluetooth stack is not yet enabled
- ESP_FAIL: others

esp_err_t **esp_a2d_source_deinit** (void)

De-initialize for A2DP source module. This function should be called only after esp_bluedroid_enable() completes successfully, and ESP_A2D_PROF_STATE_EVT with ESP_A2D_DEINIT_SUCCESS will reported to APP layer.

Return

- ESP_OK: success
- ESP_INVALID_STATE: if bluetooth stack is not yet enabled
- ESP_FAIL: others

esp_err_t **esp_a2d_source_register_data_callback** (*esp_a2d_source_data_cb_t callback*)

Register A2DP source data input function. For now, the input shoule be PCM data stream. This function should be called only after esp_bluedroid_enable() completes successfully. The callback is invoked in the context of A2DP source task whose stack size is configurable through menuconfig.

Return

- ESP_OK: success
- ESP_INVALID_STATE: if bluetooth stack is not yet enabled
- ESP_FAIL: if callback is a NULL function pointer

Parameters

- `[in] callback`: A2DP source data callback function

esp_err_t **esp_a2d_source_connect** (*esp_bd_addr_t remote_bda*)

Connect to remote A2DP sink device. This API must be called after esp_a2d_source_init() and before esp_a2d_source_deinit().

Return

- ESP_OK: connect request is sent to lower layer successfully
- ESP_INVALID_STATE: if bluetooth stack is not yet enabled
- ESP_FAIL: others

Parameters

- `[in] remote_bda`: remote bluetooth device address

esp_err_t **esp_a2d_source_disconnect** (*esp_bd_addr_t remote_bda*)

Disconnect from the remote A2DP sink device. This API must be called after esp_a2d_source_init() and before esp_a2d_source_deinit().

Return

- ESP_OK: disconnect request is sent to lower layer
- ESP_INVALID_STATE: if bluetooth stack is not yet enabled
- ESP_FAIL: others

Parameters

- `[in] remote_bda`: remote bluetooth device address

Unions

union esp_a2d_cb_param_t

#include <esp_a2dp_api.h> A2DP state callback parameters.

Public Members

struct *esp_a2d_cb_param_t*::*a2d_conn_stat_param* **conn_stat**

A2DP connection status

struct *esp_a2d_cb_param_t*::*a2d_audio_stat_param* **audio_stat**

audio stream playing state

struct *esp_a2d_cb_param_t*::*a2d_audio_cfg_param* **audio_cfg**

media codec configuration information

struct *esp_a2d_cb_param_t*::*media_ctrl_stat_param* **media_ctrl_stat**

status in acknowledgement to media control commands

struct *esp_a2d_cb_param_t*::*a2d_prof_stat_param* **a2d_prof_stat**
status to indicate a2d prof init or deinit

struct a2d_audio_cfg_param
#include <*esp_a2dp_api.h*> ESP_A2D_AUDIO_CFG_EVT.

Public Members

esp_bd_addr_t **remote_bda**
remote bluetooth device address

esp_a2d_mcc_t **mcc**
A2DP media codec capability information

struct a2d_audio_stat_param
#include <*esp_a2dp_api.h*> ESP_A2D_AUDIO_STATE_EVT.

Public Members

esp_a2d_audio_state_t **state**
one of the values from esp_a2d_audio_state_t

esp_bd_addr_t **remote_bda**
remote bluetooth device address

struct a2d_conn_stat_param
#include <*esp_a2dp_api.h*> ESP_A2D_CONNECTION_STATE_EVT.

Public Members

esp_a2d_connection_state_t **state**
one of values from esp_a2d_connection_state_t

esp_bd_addr_t **remote_bda**
remote bluetooth device address

esp_a2d_disc_rsn_t **disc_rsn**
reason of disconnection for "DISCONNECTED"

struct a2d_prof_stat_param
#include <*esp_a2dp_api.h*> ESP_A2D_PROF_STATE_EVT.

Public Members

esp_a2d_init_state_t **init_state**
a2dp profile state param

struct media_ctrl_stat_param
#include <*esp_a2dp_api.h*> ESP_A2D_MEDIA_CTRL_ACK_EVT.

Public Members

esp_a2d_media_ctrl_t **cmd**
media control commands to acknowledge

esp_a2d_media_ctrl_ack_t **status**
acknowledgement to media control commands

Structures

struct esp_a2d_mcc_t

A2DP media codec capabilities union

Public Members

esp_a2d_mct_t **type**

A2DP media codec type

uint8_t **sbc**[**ESP_A2D_CIE_LEN_SBC**]

SBC codec capabilities

uint8_t **m12**[**ESP_A2D_CIE_LEN_M12**]

MPEG-1,2 audio codec capabilities

uint8_t **m24**[**ESP_A2D_CIE_LEN_M24**]

MPEG-2, 4 AAC audio codec capabilities

uint8_t **atrac**[**ESP_A2D_CIE_LEN_ATRAC**]

ATRAC family codec capabilities

union *esp_a2d_mcc_t*::**[anonymous] cie**

A2DP codec information element

Macros

ESP_A2D_MCT_SBC

Media codec types supported by A2DP.

SBC

ESP_A2D_MCT_M12

MPEG-1, 2 Audio

ESP_A2D_MCT_M24

MPEG-2, 4 AAC

ESP_A2D_MCT_ATRAC

ATRAC family

ESP_A2D_MCT_NON_A2DP

ESP_A2D_CIE_LEN_SBC

ESP_A2D_CIE_LEN_M12

ESP_A2D_CIE_LEN_M24

ESP_A2D_CIE_LEN_ATRAC

Type Definitions

typedef uint8_t **esp_a2d_mct_t**

typedef void (***esp_a2d_cb_t**) (*esp_a2d_cb_event_t* event, *esp_a2d_cb_param_t* *param)

A2DP profile callback function type.

Parameters

- `event`: : Event type
- `param`: : Pointer to callback parameter

typedef void (***esp_a2d_sink_data_cb_t**) (**const** uint8_t *buf, uint32_t len)

A2DP sink data callback function.

Parameters

- `[in] buf`: : pointer to the data received from A2DP source device and is PCM format decoded from SBC decoder; buf references to a static memory block and can be overwritten by upcoming data

- `[in] len`: : size(in bytes) in buf

typedef int32_t (***esp_a2d_source_data_cb_t**)(uint8_t *buf, int32_t len)

A2DP source data read callback function.

Return size of bytes read successfully, if the argument len is -1, this value is ignored.

Parameters

- `[in] buf`: : buffer to be filled with PCM data stream from higher layer
- `[in] len`: : size(in bytes) of data block to be copied to buf. -1 is an indication to user that data buffer shall be flushed

Enumerations

enum esp_a2d_connection_state_t

Bluetooth A2DP connection states.

Values:

ESP_A2D_CONNECTION_STATE_DISCONNECTED = 0

connection released

ESP_A2D_CONNECTION_STATE_CONNECTING

connecting remote device

ESP_A2D_CONNECTION_STATE_CONNECTED

connection established

ESP_A2D_CONNECTION_STATE_DISCONNECTING

disconnecting remote device

enum esp_a2d_disc_rsn_t

Bluetooth A2DP disconnection reason.

Values:

ESP_A2D_DISC_RSN_NORMAL = 0

Finished disconnection that is initiated by local or remote device

ESP_A2D_DISC_RSN_ABNORMAL

Abnormal disconnection caused by signal loss

enum esp_a2d_audio_state_t

Bluetooth A2DP datapath states.

Values:

ESP_A2D_AUDIO_STATE_REMOTE_SUSPEND = 0

audio stream datapath suspended by remote device

ESP_A2D_AUDIO_STATE_STOPPED

audio stream datapath stopped

ESP_A2D_AUDIO_STATE_STARTED

audio stream datapath started

enum esp_a2d_media_ctrl_ack_t

A2DP media control command acknowledgement code.

Values:

ESP_A2D_MEDIA_CTRL_ACK_SUCCESS = 0

media control command is acknowledged with success

ESP_A2D_MEDIA_CTRL_ACK_FAILURE

media control command is acknowledged with failure

ESP_A2D_MEDIA_CTRL_ACK_BUSY

media control command is rejected, as previous command is not yet acknowledged

enum esp_a2d_media_ctrl_t
A2DP media control commands.

Values:

ESP_A2D_MEDIA_CTRL_NONE = 0
Not for application use, use inside stack only.

ESP_A2D_MEDIA_CTRL_CHECK_SRC_RDY
check whether AVDTP is connected, only used in A2DP source

ESP_A2D_MEDIA_CTRL_START
command to set up media transmission channel

ESP_A2D_MEDIA_CTRL_STOP
command to stop media transmission

ESP_A2D_MEDIA_CTRL_SUSPEND
command to suspend media transmission

enum esp_a2d_init_state_t
Bluetooth A2DP Initiation states.

Values:

ESP_A2D_DEINIT_SUCCESS = 0
A2DP profile deinit successful event

ESP_A2D_INIT_SUCCESS
A2DP profile deinit successful event

enum esp_a2d_cb_event_t
A2DP callback events.

Values:

ESP_A2D_CONNECTION_STATE_EVT = 0
connection state changed event

ESP_A2D_AUDIO_STATE_EVT
audio stream transmission state changed event

ESP_A2D_AUDIO_CFG_EVT
audio codec is configured, only used for A2DP SINK

ESP_A2D_MEDIA_CTRL_ACK_EVT
acknowledge event in response to media control commands

ESP_A2D_PROF_STATE_EVT
indicate a2dp init&deinit complete

BT AVRCP APIs

Overview Bluetooth AVRCP reference APIs.

API Reference

Header File

- bt/host/bluedroid/api/include/api/esp_avrc_api.h

Functions

esp_err_t **esp_avrc_ct_register_callback**(*esp_avrc_ct_cb_t callback*)

Register application callbacks to AVRCP module. This function should be called after esp_bluedroid_enable() completes successfully.

Return

- ESP_OK: success
- ESP_ERR_INVALID_STATE: if bluetooth stack is not yet enabled
- ESP_FAIL: others

Parameters

- `[in] callback`: AVRCP controller callback function

esp_err_t **esp_avrc_ct_init**(void)

Initialize the bluetooth AVRCP controller module, This function should be called after esp_bluedroid_enable() completes successfully. Note: AVRC cannot work independently, AVRC should be used along with A2DP and AVRC should be initialized before A2DP.

Return

- ESP_OK: success
- ESP_ERR_INVALID_STATE: if bluetooth stack is not yet enabled
- ESP_FAIL: others

esp_err_t **esp_avrc_ct_deinit**(void)

De-initialize AVRCP controller module. This function should be called after after esp_bluedroid_enable() completes successfully. Note: AVRC cannot work independently, AVRC should be used along with A2DP and AVRC should be deinitialized before A2DP.

Return

- ESP_OK: success
- ESP_ERR_INVALID_STATE: if bluetooth stack is not yet enabled
- ESP_FAIL: others

esp_err_t **esp_avrc_ct_send_set_player_value_cmd**(uint8_t *tl*, uint8_t *attr_id*, uint8_t *value_id*)

Send player application settings command to AVRCP target. This function should be called after ESP_AVRC_CT_CONNECTION_STATE_EVT is received and AVRCP connection is established.

Return

- ESP_OK: success
- ESP_ERR_INVALID_STATE: if bluetooth stack is not yet enabled
- ESP_FAIL: others

Parameters

- `[in] tl`: : transaction label, 0 to 15, consecutive commands should use different values
- `[in] attr_id`: : player application setting attribute IDs from one of esp_avrc_ps_attr_ids_t
- `[in] value_id`: : attribute value defined for the specific player application setting attribute

esp_err_t **esp_avrc_ct_send_get_rn_capabilities_cmd**(uint8_t *tl*)

Send GetCapabilities PDU to AVRCP target to retrieve remote device's supported notification event_ids. This function should be called after ESP_AVRC_CT_CONNECTION_STATE_EVT is received and AVRCP connection is established.

Return

- ESP_OK: success
- ESP_ERR_INVALID_STATE: if bluetooth stack is not yet enabled
- ESP_FAIL: others

Parameters

- `[in] tl`: : transaction label, 0 to 15, consecutive commands should use different values

esp_err_t **esp_avrc_ct_send_register_notification_cmd**(uint8_t *tl*, uint8_t *event_id*, uint32_t *event_parameter*)

Send register notification command to AVRCP target. This function should be called after ESP_AVRC_CT_CONNECTION_STATE_EVT is received and AVRCP connection is established.

Return

- ESP_OK: success
- ESP_ERR_INVALID_STATE: if bluetooth stack is not yet enabled
- ESP_ERR_NOT_SUPPORTED: if the event_id is not supported in current implementation
- ESP_FAIL: others

Parameters

- `[in] tl`: : transaction label, 0 to 15, consecutive commands should use different values.
- `[in] event_id`: : id of events, e.g. ESP_AVRC_RN_PLAY_STATUS_CHANGE, ESP_AVRC_RN_TRACK_CHANGE, etc.
- `[in] event_parameter`: : playback interval for ESP_AVRC_RN_PLAY_POS_CHANGED; For other events , value of this parameter is ignored.

esp_err_t **esp_avrc_ct_send_set_absolute_volume_cmd**(uint8_t *tl*, uint8_t *volume*)

Send set absolute volume command to AVRCP target. This function should be called after ESP_AVRC_CT_CONNECTION_STATE_EVT is received and AVRCP connection is established.

Return

- ESP_OK: success
- ESP_ERR_INVALID_STATE: if bluetooth stack is not yet enabled
- ESP_ERR_NOT_SUPPORTED: if the event_id is not supported in current implementation
- ESP_FAIL: others

Parameters

- `[in] tl`: : transaction label, 0 to 15, consecutive commands should use different values
- `[in] volume`: : volume, 0 to 0x7f, means 0% to 100%

esp_err_t **esp_avrc_ct_send_metadata_cmd**(uint8_t *tl*, uint8_t *attr_mask*)

Send metadata command to AVRCP target. This function should be called after ESP_AVRC_CT_CONNECTION_STATE_EVT is received and AVRCP connection is established.

Return

- ESP_OK: success
- ESP_ERR_INVALID_STATE: if bluetooth stack is not yet enabled
- ESP_FAIL: others

Parameters

- `[in] tl`: : transaction label, 0 to 15, consecutive commands should use different values.
- `[in] attr_mask`: : mask of attributes, e.g. ESP_AVRC_MD_ATTR_ID_TITLE | ESP_AVRC_MD_ATTR_ID_ARTIST.

esp_err_t **esp_avrc_ct_send_passthrough_cmd**(uint8_t *tl*, uint8_t *key_code*, uint8_t *key_state*)

Send passthrough command to AVRCP target. This function should be called after ESP_AVRC_CT_CONNECTION_STATE_EVT is received and AVRCP connection is established.

Return

- ESP_OK: success
- ESP_ERR_INVALID_STATE: if bluetooth stack is not yet enabled
- ESP_FAIL: others

Parameters

- `[in] tl`: : transaction label, 0 to 15, consecutive commands should use different values.
- `[in] key_code`: : passthrough command code, e.g. ESP_AVRC_PT_CMD_PLAY, ESP_AVRC_PT_CMD_STOP, etc.
- `[in] key_state`: : passthrough command key state, ESP_AVRC_PT_CMD_STATE_PRESSED or ESP_AVRC_PT_CMD_STATE_RELEASED

esp_err_t **esp_avrc_tg_register_callback**(*esp_avrc_tg_cb_t* *callback*)

Register application callbacks to AVRCP target module. This function should be called after esp_bluedroid_enable() completes successfully.

Return

- ESP_OK: success
- ESP_ERR_INVALID_STATE: if bluetooth stack is not yet enabled
- ESP_FAIL: others

Parameters

- `[in] callback`: AVRCP target callback function

esp_err_t **esp_avrc_tg_init**(void)

Initialize the bluetooth AVRCP target module, This function should be called after esp_bluedroid_enable() completes successfully. Note: AVRC cannot work independently, AVRC should be used along with A2DP and AVRC should be initialized before A2DP.

Return

- ESP_OK: success
- ESP_ERR_INVALID_STATE: if bluetooth stack is not yet enabled
- ESP_FAIL: others

esp_err_t **esp_avrc_tg_deinit**(void)

De-initialize AVRCP target module. This function should be called after after esp_bluedroid_enable() completes successfully. Note: AVRC cannot work independently, AVRC should be used along with A2DP and AVRC should be deinitialized before A2DP.

Return

- ESP_OK: success
- ESP_ERR_INVALID_STATE: if bluetooth stack is not yet enabled
- ESP_FAIL: others

esp_err_t **esp_avrc_tg_get_psth_cmd_filter**(*esp_avrc_psth_filter_t* *filter*, *esp_avrc_psth_bit_mask_t* **cmd_set*)

Get the current filter of remote passthrough commands on AVRC target. Filter is given by filter type and bit mask for the passthrough commands. This function should be called after esp_avrc_tg_init(). For filter type ESP_AVRC_PSTH_FILTER_ALLOWED_CMD, the retrieved command set is constant and it covers all of the passthrough commands that can possibly be supported. For filter type ESP_AVRC_PSTH_FILTER_SUPPORT_COMMANDS, the retrieved command set covers the passthrough commands selected to be supported according to current configuration. The configuration can be changed using esp_avrc_tg_set_psth_cmd_filter().

Return

- ESP_OK: success
- ESP_ERR_INVALID_STATE: if bluetooth stack is not enabled or AVRC TG is not initialized
- ESP_ERR_INVALID_ARG: if filter type is invalid or cmd_set is NULL
- ESP_FAIL: otherwise

esp_err_t **esp_avrc_tg_set_psth_cmd_filter**(*esp_avrc_psth_filter_t* *filter*, **const** *esp_avrc_psth_bit_mask_t* **cmd_set*)

Set the filter of remote passthrough commands on AVRC target. Filter is given by filter type and bit mask for the passthrough commands. This function should be called after esp_avrc_tg_init().

If filter type is ESP_AVRC_PSTH_FILTER_SUPPORT_CMD, the passthrough commands which are set "1" as given in cmd_set will generate ESP_AVRC_CT_PASSTHROUGH_RSP_EVT callback event and are auto-accepted in the protocol stack, other commands are replied with response type "NOT IMPLEMENTED" (8). The set of supported commands should be a subset of allowed command set. The allowed command set can be retrieved using esp_avrc_tg_get_psth_cmd_filter() with filter type "ESP_AVRC_PSTH_FILTER_ALLOWED_CMD" .

Filter type "ESP_AVRC_PSTH_FILTER_ALLOWED_CMD" does not apply to this function.

Return

- ESP_OK: success
- ESP_ERR_INVALID_STATE: if bluetooth stack is not enabled
- ESP_ERR_INVALID_ARG: if filter type is invalid or cmd_set is NULL
- ESP_ERR_NOT_SUPPORTED:: if filter type is ESP_AVRC_PSTH_FILTER_ALLOWED_CMD, or cmd_set includes unallowed commands

bool **esp_avrc_psth_bit_mask_operation**(*esp_avrc_bit_mask_op_t* *op*, *esp_avrc_psth_bit_mask_t* **psth*, *esp_avrc_pt_cmd_t* *cmd*)

Operate on the type *esp_avrc_psth_bit_mask_t* with regard to a specific PASSTHROUGH command.

Return For operation ESP_AVRC_BIT_MASK_OP_SET or ESP_AVRC_BIT_MASK_OP_CLEAR, return true for a successful operation, otherwise return false. For operation

ESP_AVRC_BIT_MASK_OP_TEST, return true if the corresponding bit is set, otherwise false.

Parameters

- `[in] op`: operation requested on the bit mask field
- `[in] psth`: pointer to passthrough command bit mask structure
- `[in] cmd`: passthrough command code

esp_err_t **esp_avrc_tg_get_rn_evt_cap**(*esp_avrc_rn_evt_cap_t cap*, *esp_avrc_rn_evt_cap_mask_t *evt_set*)

Get the requested event notification capabilies on local AVRC target. The capability is returned in a bit mask representation in evt_set. This function should be called after esp_avrc_tg_init().

For capability type "ESP_AVRC_RN_CAP_ALLOWED_EVT, the retrieved event set is constant and it covers all of the notifcation events that can possibly be supported with current implementation.

For capability type ESP_AVRC_RN_CAP_SUPPORTED_EVT, the event set covers the notification events selected to be supported under current configuration, The configuration can be changed using esp_avrc_tg_set_rn_evt_cap().

Return

- ESP_OK: success
- ESP_ERR_INVALID_STATE: if bluetooth stack is not enabled or AVRC TG is not initialized
- ESP_ERR_INVALID_ARG: if cap is invalid or evt_set is NULL
- ESP_FAIL: otherwise

esp_err_t **esp_avrc_tg_set_rn_evt_cap**(**const** *esp_avrc_rn_evt_cap_mask_t *evt_set*)

Set the event notification capabilities on local AVRCP target. The capability is given in a bit mask representation in evt_set and must be a subset of allowed event IDs with current implementation. This function should be called after esp_avrc_tg_init().

Return

- ESP_OK: success
- ESP_ERR_INVALID_STATE: if bluetooth stack is not enabled
- ESP_ERR_INVALID_ARG: if evt_set is NULL

bool **esp_avrc_rn_evt_bit_mask_operation**(*esp_avrc_bit_mask_op_t op*, *esp_avrc_rn_evt_cap_mask_t *events*, *esp_avrc_rn_event_ids_t event_id*)

Operate on the type *esp_avrc_rn_evt_cap_mask_t* with regard to a specific event.

For operation ESP_AVRC_BIT_MASK_OP_TEST, return true if the corresponding bit is set, otherwise false.

Return For operation ESP_AVRC_BIT_MASK_OP_SET or ESP_AVRC_BIT_MASK_OP_CLEAR, return true for a successful operation, otherwise return false.

Parameters

- `[in] op`: operation requested on the bit mask field
- `[in] events`: pointer to event notification capability bit mask structure
- `[in] event_id`: notification event code

esp_err_t **esp_avrc_tg_send_rn_rsp**(*esp_avrc_rn_event_ids_t event_id*, *esp_avrc_rn_rsp_t rsp*, *esp_avrc_rn_param_t *param*)

Send RegisterNotification Response to remote AVRCP controller. Local event notification capability can be set using esp_avrc_tg_set_rn_evt_cap(), in a bit mask representation in evt_set. This function should be called after esp_avrc_tg_init().

Return

- ESP_OK: success
- ESP_ERR_INVALID_STATE: if bluetooth stack is not enabled or AVRC TG is not initialized
- ESP_ERR_INVALID_ARG: if evt_set is NULL

Parameters

- `[in] event_id`: notification event ID that remote AVRCP CT registers
- `[in] rsp`: notification response code
- `[in] param`: parameters included in the specific notification

Unions

union esp_avrc_rn_param_t

#include <esp_avrc_api.h> AVRCP notification parameters.

Public Members

uint8_t **volume**
response data for ESP_AVRC_RN_VOLUME_CHANGE, ranges 0..127

esp_avrc_playback_stat_t **playback**
response data for ESP_AVRC_RN_PLAY_STATUS_CHANGE

uint8_t **elm_id**[8]
response data for ESP_AVRC_RN_TRACK_CHANGE

uint32_t **play_pos**
response data for ESP_AVRC_RN_PLAY_POS_CHANGED, in millisecond

esp_avrc_batt_stat_t **batt**
response data for ESP_AVRC_RN_BATTERY_STATUS_CHANGE

union esp_avrc_ct_cb_param_t

#include <esp_avrc_api.h> AVRC controller callback parameters.

Public Members

struct *esp_avrc_ct_cb_param_t*::*avrc_ct_conn_stat_param* **conn_stat**
AVRC connection status

struct *esp_avrc_ct_cb_param_t*::*avrc_ct_psth_rsp_param* **psth_rsp**
passthrough command response

struct *esp_avrc_ct_cb_param_t*::*avrc_ct_meta_rsp_param* **meta_rsp**
metadata attributes response

struct *esp_avrc_ct_cb_param_t*::*avrc_ct_change_notify_param* **change_ntf**
notifications

struct *esp_avrc_ct_cb_param_t*::*avrc_ct_rmt_feats_param* **rmt_feats**
AVRC features discovered from remote SDP server

struct *esp_avrc_ct_cb_param_t*::*avrc_ct_get_rn_caps_rsp_param* **get_rn_caps_rsp**
get supported event capabilities response from AVRCP target

struct *esp_avrc_ct_cb_param_t*::*avrc_ct_set_volume_rsp_param* **set_volume_rsp**
set absolute volume response event

struct avrc_ct_change_notify_param

#include <esp_avrc_api.h> ESP_AVRC_CT_CHANGE_NOTIFY_EVT.

Public Members

uint8_t **event_id**
id of AVRC event notification

esp_avrc_rn_param_t **event_parameter**
event notification parameter

struct avrc_ct_conn_stat_param

#include <esp_avrc_api.h> ESP_AVRC_CT_CONNECTION_STATE_EVT.

Public Members

bool **connected**
whether AVRC connection is set up

esp_bd_addr_t **remote_bda**
remote bluetooth device address

struct avrc_ct_get_rn_caps_rsp_param
#include <esp_avrc_api.h> ESP_AVRC_CT_GET_RN_CAPABILITIES_RSP_EVT.

Public Members

uint8_t **cap_count**
number of items provided in event or company_id according to cap_id used

esp_avrc_rn_evt_cap_mask_t **evt_set**
supported event_ids represented in bit-mask

struct avrc_ct_meta_rsp_param
#include <esp_avrc_api.h> ESP_AVRC_CT_METADATA_RSP_EVT.

Public Members

uint8_t **attr_id**
id of metadata attribute

uint8_t ***attr_text**
attribute itself

int **attr_length**
attribute character length

struct avrc_ct_psth_rsp_param
#include <esp_avrc_api.h> ESP_AVRC_CT_PASSTHROUGH_RSP_EVT.

Public Members

uint8_t **tl**
transaction label, 0 to 15

uint8_t **key_code**
passthrough command code

uint8_t **key_state**
0 for PRESSED, 1 for RELEASED

esp_avrc_rsp_t **rsp_code**
response code

struct avrc_ct_rmt_feats_param
#include <esp_avrc_api.h> ESP_AVRC_CT_REMOTE_FEATURES_EVT.

Public Members

uint32_t **feat_mask**
AVRC feature mask of remote device

uint16_t **tg_feat_flag**
feature flag of remote device as TG

esp_bd_addr_t **remote_bda**
remote bluetooth device address

struct avrc_ct_set_volume_rsp_param
#include <esp_avrc_api.h> ESP_AVRC_CT_SET_ABSOLUTE_VOLUME_RSP_EVT.

Public Members

uint8_t **volume**
the volume which has actually been set, range is 0 to 0x7f, means 0% to 100%

union esp_avrc_tg_cb_param_t
#include <esp_avrc_api.h> AVRC target callback parameters.

Public Members

struct *esp_avrc_tg_cb_param_t*::*avrc_tg_conn_stat_param* **conn_stat**
AVRC connection status

struct *esp_avrc_tg_cb_param_t*::*avrc_tg_rmt_feats_param* **rmt_feats**
AVRC features discovered through SDP

struct *esp_avrc_tg_cb_param_t*::*avrc_tg_psth_cmd_param* **psth_cmd**
passthrough command

struct *esp_avrc_tg_cb_param_t*::*avrc_tg_set_abs_vol_param* **set_abs_vol**
set absolute volume command targeted on audio sink

struct *esp_avrc_tg_cb_param_t*::*avrc_tg_reg_ntf_param* **reg_ntf**
register notification

struct *esp_avrc_tg_cb_param_t*::*avrc_tg_set_app_value_param* **set_app_value**
set player application value

struct avrc_tg_conn_stat_param
#include <esp_avrc_api.h> ESP_AVRC_TG_CONNECTION_STATE_EVT.

Public Members

bool **connected**
whether AVRC connection is set up

esp_bd_addr_t **remote_bda**
remote bluetooth device address

struct avrc_tg_psth_cmd_param
#include <esp_avrc_api.h> ESP_AVRC_TG_PASSTHROUGH_CMD_EVT.

Public Members

uint8_t **key_code**
passthrough command code

uint8_t **key_state**
0 for PRESSED, 1 for RELEASED

struct avrc_tg_reg_ntf_param
#include <esp_avrc_api.h> ESP_AVRC_TG_REGISTER_NOTIFICATION_EVT.

Public Members

uint8_t **event_id**
event id of AVRC RegisterNotification

uint32_t **event_parameter**
event notification parameter

struct avrc_tg_rmt_feats_param
#include <esp_avrc_api.h> ESP_AVRC_TG_REMOTE_FEATURES_EVT.

Public Members

uint32_t **feat_mask**
AVRC feature mask of remote device

uint16_t **ct_feat_flag**
feature flag of remote device as CT

esp_bd_addr_t **remote_bda**
remote bluetooth device address

struct avrc_tg_set_abs_vol_param
#include <esp_avrc_api.h> ESP_AVRC_TG_SET_ABSOLUTE_VOLUME_CMD_EVT.

Public Members

uint8_t **volume**
volume ranges from 0 to 127

struct avrc_tg_set_app_value_param
#include <esp_avrc_api.h> ESP_AVRC_TG_SET_PLAYER_APP_VALUE_EVT.

Public Members

uint8_t **num_val**
attribute num

esp_avrc_set_app_value_param_t ***p_vals**
point to the id and value of player application attribute

Structures

struct esp_avrc_psth_bit_mask_t
AVRC passthrough command bit mask.

Public Members

uint16_t **bits**[8]
bit mask representation of PASSTHROUGH commands

struct esp_avrc_rn_evt_cap_mask_t
AVRC target notification event capability bit mask.

Public Members

uint16_t **bits**
bit mask representation of PASSTHROUGH commands

struct esp_avrc_set_app_value_param_t
AVRCP set app value parameters.

Public Members

uint8_t **attr_id**
player application attribute id

uint8_t **attr_val**
player application attribute value

Macros

ESP_AVRC_TRANS_LABEL_MAX
max transaction label

Type Definitions

typedef void (***esp_avrc_ct_cb_t**)(*esp_avrc_ct_cb_event_t* event, *esp_avrc_ct_cb_param_t* *param)
AVRCP controller callback function type.

Parameters
- `event`: : Event type
- `param`: : Pointer to callback parameter union

typedef void (***esp_avrc_tg_cb_t**)(*esp_avrc_tg_cb_event_t* event, *esp_avrc_tg_cb_param_t* *param)
AVRCP target callback function type.

Parameters
- `event`: : Event type
- `param`: : Pointer to callback parameter union

Enumerations

enum esp_avrc_features_t
AVRC feature bit mask.

Values:

ESP_AVRC_FEAT_RCTG = 0x0001
remote control target

ESP_AVRC_FEAT_RCCT = 0x0002
remote control controller

ESP_AVRC_FEAT_VENDOR = 0x0008
remote control vendor dependent commands

ESP_AVRC_FEAT_BROWSE = 0x0010
use browsing channel

ESP_AVRC_FEAT_META_DATA = 0x0040
remote control metadata transfer command/response

ESP_AVRC_FEAT_ADV_CTRL = 0x0200
remote control advanced control commmand/response

enum esp_avrc_feature_flag_t

AVRC supported features flag retrieved in SDP record.

Values:

ESP_AVRC_FEAT_FLAG_CAT1 = 0x0001
category 1

ESP_AVRC_FEAT_FLAG_CAT2 = 0x0002
category 2

ESP_AVRC_FEAT_FLAG_CAT3 = 0x0004
category 3

ESP_AVRC_FEAT_FLAG_CAT4 = 0x0008
category 4

ESP_AVRC_FEAT_FLAG_BROWSING = 0x0040
browsing

ESP_AVRC_FEAT_FLAG_COVER_ART_GET_IMAGE_PROP = 0x0080
Cover Art GetImageProperties

ESP_AVRC_FEAT_FLAG_COVER_ART_GET_IMAGE = 0x0100
Cover Art GetImage

ESP_AVRC_FEAT_FLAG_COVER_ART_GET_LINKED_THUMBNAIL = 0x0200
Cover Art GetLinkedThumbnail

enum esp_avrc_pt_cmd_t

AVRC passthrough command code.

Values:

ESP_AVRC_PT_CMD_SELECT = 0x00
select

ESP_AVRC_PT_CMD_UP = 0x01
up

ESP_AVRC_PT_CMD_DOWN = 0x02
down

ESP_AVRC_PT_CMD_LEFT = 0x03
left

ESP_AVRC_PT_CMD_RIGHT = 0x04
right

ESP_AVRC_PT_CMD_RIGHT_UP = 0x05
right-up

ESP_AVRC_PT_CMD_RIGHT_DOWN = 0x06
right-down

ESP_AVRC_PT_CMD_LEFT_UP = 0x07
left-up

ESP_AVRC_PT_CMD_LEFT_DOWN = 0x08
left-down

ESP_AVRC_PT_CMD_ROOT_MENU = 0x09
root menu

ESP_AVRC_PT_CMD_SETUP_MENU = 0x0A
setup menu

ESP_AVRC_PT_CMD_CONT_MENU = 0x0B
contents menu

ESP_AVRC_PT_CMD_FAV_MENU = 0x0C
favorite menu

ESP_AVRC_PT_CMD_EXIT = 0x0D
exit

ESP_AVRC_PT_CMD_0 = 0x20
0

ESP_AVRC_PT_CMD_1 = 0x21
1

ESP_AVRC_PT_CMD_2 = 0x22
2

ESP_AVRC_PT_CMD_3 = 0x23
3

ESP_AVRC_PT_CMD_4 = 0x24
4

ESP_AVRC_PT_CMD_5 = 0x25
5

ESP_AVRC_PT_CMD_6 = 0x26
6

ESP_AVRC_PT_CMD_7 = 0x27
7

ESP_AVRC_PT_CMD_8 = 0x28
8

ESP_AVRC_PT_CMD_9 = 0x29
9

ESP_AVRC_PT_CMD_DOT = 0x2A
dot

ESP_AVRC_PT_CMD_ENTER = 0x2B
enter

ESP_AVRC_PT_CMD_CLEAR = 0x2C
clear

ESP_AVRC_PT_CMD_CHAN_UP = 0x30
channel up

ESP_AVRC_PT_CMD_CHAN_DOWN = 0x31
channel down

ESP_AVRC_PT_CMD_PREV_CHAN = 0x32
previous channel

ESP_AVRC_PT_CMD_SOUND_SEL = 0x33
sound select

ESP_AVRC_PT_CMD_INPUT_SEL = 0x34
input select

ESP_AVRC_PT_CMD_DISP_INFO = 0x35
display information

ESP_AVRC_PT_CMD_HELP = 0x36
help

ESP_AVRC_PT_CMD_PAGE_UP = 0x37
page up

ESP_AVRC_PT_CMD_PAGE_DOWN = 0x38
page down

ESP_AVRC_PT_CMD_POWER = 0x40
power

ESP_AVRC_PT_CMD_VOL_UP = 0x41
volume up

ESP_AVRC_PT_CMD_VOL_DOWN = 0x42
volume down

ESP_AVRC_PT_CMD_MUTE = 0x43
mute

ESP_AVRC_PT_CMD_PLAY = 0x44
play

ESP_AVRC_PT_CMD_STOP = 0x45
stop

ESP_AVRC_PT_CMD_PAUSE = 0x46
pause

ESP_AVRC_PT_CMD_RECORD = 0x47
record

ESP_AVRC_PT_CMD_REWIND = 0x48
rewind

ESP_AVRC_PT_CMD_FAST_FORWARD = 0x49
fast forward

ESP_AVRC_PT_CMD_EJECT = 0x4A
eject

ESP_AVRC_PT_CMD_FORWARD = 0x4B
forward

ESP_AVRC_PT_CMD_BACKWARD = 0x4C
backward

ESP_AVRC_PT_CMD_ANGLE = 0x50
angle

ESP_AVRC_PT_CMD_SUBPICT = 0x51
subpicture

ESP_AVRC_PT_CMD_F1 = 0x71
F1

ESP_AVRC_PT_CMD_F2 = 0x72
F2

ESP_AVRC_PT_CMD_F3 = 0x73
F3

ESP_AVRC_PT_CMD_F4 = 0x74
F4

ESP_AVRC_PT_CMD_F5 = 0x75
F5

ESP_AVRC_PT_CMD_VENDOR = 0x7E
vendor unique

enum esp_avrc_psth_filter_t
AVRC passthrough command filter.

Values:

ESP_AVRC_PSTH_FILTER_ALLOWED_CMD = 0
all of the PASSTHROUGH commands that can possibly be used, immuateble

ESP_AVRC_PSTH_FILTER_SUPPORTED_CMD = 1
PASSTHROUGH commands selectively supported according to the current configuration

ESP_AVRC_PSTH_FILTER_SUPPORT_MAX

enum esp_avrc_bit_mask_op_t
Values:

ESP_AVRC_BIT_MASK_OP_TEST = 0
operation code to test a specific bit

ESP_AVRC_BIT_MASK_OP_SET = 1
operation code to set a specific bit

ESP_AVRC_BIT_MASK_OP_CLEAR = 2
operation code to clear a specific bit

enum esp_avrc_pt_cmd_state_t
AVRC passthrough command state.

Values:

ESP_AVRC_PT_CMD_STATE_PRESSED = 0
key pressed

ESP_AVRC_PT_CMD_STATE_RELEASED = 1
key released

enum esp_avrc_ct_cb_event_t
AVRC Controller callback events.

Values:

ESP_AVRC_CT_CONNECTION_STATE_EVT = 0
connection state changed event

ESP_AVRC_CT_PASSTHROUGH_RSP_EVT = 1
passthrough response event

ESP_AVRC_CT_METADATA_RSP_EVT = 2
metadata response event

ESP_AVRC_CT_PLAY_STATUS_RSP_EVT = 3
play status response event

ESP_AVRC_CT_CHANGE_NOTIFY_EVT = 4
notification event

ESP_AVRC_CT_REMOTE_FEATURES_EVT = 5
feature of remote device indication event

ESP_AVRC_CT_GET_RN_CAPABILITIES_RSP_EVT = 6
supported notification events capability of peer device

ESP_AVRC_CT_SET_ABSOLUTE_VOLUME_RSP_EVT = 7
set absolute volume response event

enum esp_avrc_tg_cb_event_t
AVRC Target callback events.

Values:

ESP_AVRC_TG_CONNECTION_STATE_EVT = 0
connection state changed event

ESP_AVRC_TG_REMOTE_FEATURES_EVT = 1
feature of remote device indication event

ESP_AVRC_TG_PASSTHROUGH_CMD_EVT = 2
passthrough command event

ESP_AVRC_TG_SET_ABSOLUTE_VOLUME_CMD_EVT = 3
set absolute volume command from remote device

ESP_AVRC_TG_REGISTER_NOTIFICATION_EVT = 4
register notification event

ESP_AVRC_TG_SET_PLAYER_APP_VALUE_EVT = 5
set applicaton attribute value, attribute refer to esp_avrc_ps_attr_ids_t

enum esp_avrc_md_attr_mask_t
AVRC metadata attribute mask.

Values:

ESP_AVRC_MD_ATTR_TITLE = 0x1
title of the playing track

ESP_AVRC_MD_ATTR_ARTIST = 0x2
track artist

ESP_AVRC_MD_ATTR_ALBUM = 0x4
album name

ESP_AVRC_MD_ATTR_TRACK_NUM = 0x8
track position on the album

ESP_AVRC_MD_ATTR_NUM_TRACKS = 0x10
number of tracks on the album

ESP_AVRC_MD_ATTR_GENRE = 0x20
track genre

ESP_AVRC_MD_ATTR_PLAYING_TIME = 0x40
total album playing time in miliseconds

enum esp_avrc_rn_event_ids_t
AVRC event notification ids.

Values:

ESP_AVRC_RN_PLAY_STATUS_CHANGE = 0x01
track status change, eg. from playing to paused

ESP_AVRC_RN_TRACK_CHANGE = 0x02
new track is loaded

ESP_AVRC_RN_TRACK_REACHED_END = 0x03
current track reached end

ESP_AVRC_RN_TRACK_REACHED_START = 0x04
current track reached start position

ESP_AVRC_RN_PLAY_POS_CHANGED = 0x05
track playing position changed

ESP_AVRC_RN_BATTERY_STATUS_CHANGE = 0x06
battery status changed

ESP_AVRC_RN_SYSTEM_STATUS_CHANGE = 0x07
system status changed

ESP_AVRC_RN_APP_SETTING_CHANGE = 0x08
application settings changed

ESP_AVRC_RN_NOW_PLAYING_CHANGE = 0x09
now playing content changed

ESP_AVRC_RN_AVAILABLE_PLAYERS_CHANGE = 0x0a
available players changed

ESP_AVRC_RN_ADDRESSED_PLAYER_CHANGE = 0x0b
the addressed player changed

ESP_AVRC_RN_UIDS_CHANGE = 0x0c
UIDs changed

ESP_AVRC_RN_VOLUME_CHANGE = 0x0d
volume changed locally on TG

ESP_AVRC_RN_MAX_EVT

enum esp_avrc_rn_evt_cap_t
AVRC target notification event notification capability.

Values:

ESP_AVRC_RN_CAP_ALLOWED_EVT = 0
all of the notification events that can possibly be supported, immutable

ESP_AVRC_RN_CAP_SUPPORTED_EVT = 1
notification events selectively supported according to the current configuration

ESP_AVRC_RN_CAP_MAX

enum esp_avrc_rn_rsp_t
AVRC notification response type.

Values:

ESP_AVRC_RN_RSP_INTERIM = 13
initial response to RegisterNotification, should be sent T_mtp(1000ms) from receiving the command

ESP_AVRC_RN_RSP_CHANGED = 15
final response to RegisterNotification command

enum esp_avrc_ps_attr_ids_t
AVRC player setting ids.

Values:

ESP_AVRC_PS_EQUALIZER = 0x01
equalizer, on or off

ESP_AVRC_PS_REPEAT_MODE = 0x02
repeat mode

ESP_AVRC_PS_SHUFFLE_MODE = 0x03
shuffle mode

ESP_AVRC_PS_SCAN_MODE = 0x04
scan mode on or off

ESP_AVRC_PS_MAX_ATTR

enum esp_avrc_ps_eq_value_ids_t
AVRC equalizer modes.

Values:

ESP_AVRC_PS_EQUALIZER_OFF = 0x1
equalizer OFF

ESP_AVRC_PS_EQUALIZER_ON = 0x2
equalizer ON

enum esp_avrc_ps_rpt_value_ids_t
AVRC repeat modes.

Values:

ESP_AVRC_PS_REPEAT_OFF = 0x1
repeat mode off

ESP_AVRC_PS_REPEAT_SINGLE = 0x2
single track repeat

ESP_AVRC_PS_REPEAT_GROUP = 0x3
group repeat

enum esp_avrc_ps_shf_value_ids_t
AVRC shuffle modes.

Values:

ESP_AVRC_PS_SHUFFLE_OFF = 0x1

ESP_AVRC_PS_SHUFFLE_ALL = 0x2

ESP_AVRC_PS_SHUFFLE_GROUP = 0x3

enum esp_avrc_ps_scn_value_ids_t
AVRC scan modes.

Values:

ESP_AVRC_PS_SCAN_OFF = 0x1
scan off

ESP_AVRC_PS_SCAN_ALL = 0x2
all tracks scan

ESP_AVRC_PS_SCAN_GROUP = 0x3
group scan

enum esp_avrc_rsp_t
AVCTP response codes.

Values:

ESP_AVRC_RSP_NOT_IMPL = 8
not implemented

ESP_AVRC_RSP_ACCEPT = 9
accept

ESP_AVRC_RSP_REJECT = 10
reject

ESP_AVRC_RSP_IN_TRANS = 11
in transition

ESP_AVRC_RSP_IMPL_STBL = 12
implemented/stable

ESP_AVRC_RSP_CHANGED = 13
changed

ESP_AVRC_RSP_INTERIM = 15
interim

enum esp_avrc_batt_stat_t
AVRCP battery status.

Values:

ESP_AVRC_BATT_NORMAL = 0
normal state

ESP_AVRC_BATT_WARNING = 1
unable to operate soon

ESP_AVRC_BATT_CRITICAL = 2
cannot operate any more

ESP_AVRC_BATT_EXTERNAL = 3
plugged to external power supply

ESP_AVRC_BATT_FULL_CHARGE = 4
when completely charged from external power supply

enum esp_avrc_playback_stat_t
AVRCP current status of playback.

Values:

ESP_AVRC_PLAYBACK_STOPPED = 0
stopped

ESP_AVRC_PLAYBACK_PLAYING = 1
playing

ESP_AVRC_PLAYBACK_PAUSED = 2
paused

ESP_AVRC_PLAYBACK_FWD_SEEK = 3
forward seek

ESP_AVRC_PLAYBACK_REV_SEEK = 4
reverse seek

ESP_AVRC_PLAYBACK_ERROR = 0xFF
error

SPP API

Application Example Check bluetooth/bluedroid/classic_bt folder in ESP-IDF examples, which contains the following application:

- This is a SPP demo. This demo can discover the service, connect, send and recive SPP data bluetooth/bluedroid/classic_bt/bt_spp_acceptor, bluetooth/bluedroid/classic_bt/bt_spp_initiator

API Reference

Header File

- bt/host/bluedroid/api/include/api/esp_spp_api.h

Functions

esp_err_t **esp_spp_register_callback**(*esp_spp_cb_t callback*)
This function is called to init callbacks with SPP module.

Return
- ESP_OK: success
- other: failed

Parameters
- `[in] callback`: pointer to the init callback function.

esp_err_t **esp_spp_init**(*esp_spp_mode_t mode*)
This function is called to init SPP module. When the operation is completed, the callback function will be called with ESP_SPP_INIT_EVT. This function should be called after esp_bluedroid_enable() completes successfully.

Return

- ESP_OK: success
- other: failed

Parameters

- `[in] mode`: Choose the mode of SPP, ESP_SPP_MODE_CB or ESP_SPP_MODE_VFS.

esp_err_t **esp_spp_deinit**(void)

This function is called to uninit SPP module. The operation will close all active SPP connection first, then the callback function will be called with ESP_SPP_CLOSE_EVT, and the number of ESP_SPP_CLOSE_EVT is equal to the number of connection. When the operation is completed, the callback function will be called with ESP_SPP_UNINIT_EVT. This function should be called after esp_spp_init() completes successfully.

Return

- ESP_OK: success
- other: failed

esp_err_t **esp_spp_start_discovery**(*esp_bd_addr_t bd_addr*)

This function is called to performs service discovery for the services provided by the given peer device. When the operation is completed, the callback function will be called with ESP_SPP_DISCOVERY_COMP_EVT. This funciton must be called after esp_spp_init() successful and before esp_spp_deinit().

Return

- ESP_OK: success
- other: failed

Parameters

- `[in] bd_addr`: Remote device bluetooth device address.

esp_err_t **esp_spp_connect**(*esp_spp_sec_t sec_mask*, *esp_spp_role_t role*, uint8_t *remote_scn*, *esp_bd_addr_t peer_bd_addr*)

This function makes an SPP connection to a remote BD Address. When the connection is initiated or failed to initiate, the callback is called with ESP_SPP_CL_INIT_EVT. When the connection is established or failed, the callback is called with ESP_SPP_OPEN_EVT. This funciton must be called after esp_spp_init() successful and before esp_spp_deinit().

Return

- ESP_OK: success
- other: failed

Parameters

- `[in] sec_mask`: Security Setting Mask. Suggest to use ESP_SPP_SEC_NONE, ESP_SPP_SEC_AUTHORIZE or ESP_SPP_SEC_AUTHENTICATE only.
- `[in] role`: Master or slave.
- `[in] remote_scn`: Remote device bluetooth device SCN.
- `[in] peer_bd_addr`: Remote device bluetooth device address.

esp_err_t **esp_spp_disconnect**(uint32_t *handle*)

This function closes an SPP connection. When the operation is completed, the callback function will be called with ESP_SPP_CLOSE_EVT. This funciton must be called after esp_spp_init() successful and before esp_spp_deinit().

Return

- ESP_OK: success
- other: failed

Parameters

- `[in] handle`: The connection handle.

esp_err_t **esp_spp_start_srv**(*esp_spp_sec_t sec_mask*, *esp_spp_role_t role*, uint8_t *local_scn*, **const** char **name*)

This function create a SPP server and starts listening for an SPP connection request from a remote Bluetooth device. When the server is started successfully, the callback is called with ESP_SPP_START_EVT. When the connection is established, the callback is called with ESP_SPP_SRV_OPEN_EVT. This funciton must be called after esp_spp_init() successful and before esp_spp_deinit().

Return

- ESP_OK: success
- other: failed

Parameters

- `[in] sec_mask`: Security Setting Mask. Suggest to use ESP_SPP_SEC_NONE, ESP_SPP_SEC_AUTHORIZE or ESP_SPP_SEC_AUTHENTICATE only.
- `[in] role`: Master or slave.
- `[in] local_scn`: The specific channel you want to get. If channel is 0, means get any channel.
- `[in] name`: Server's name.

esp_err_t **esp_spp_stop_srv**(void)

This function stops all SPP servers. The operation will close all active SPP connection first, then the callback function will be called with ESP_SPP_CLOSE_EVT, and the number of ESP_SPP_CLOSE_EVT is equal to the number of connection. When the operation is completed, the callback is called with ESP_SPP_SRV_STOP_EVT. This funciton must be called after esp_spp_init() successful and before esp_spp_deinit().

Return

- ESP_OK: success
- other: failed

esp_err_t **esp_spp_stop_srv_scn**(uint8_t *scn*)

This function stops a specific SPP server. The operation will close all active SPP connection first on the specific SPP server, then the callback function will be called with ESP_SPP_CLOSE_EVT, and the number of ESP_SPP_CLOSE_EVT is equal to the number of connection. When the operation is completed, the callback is called with ESP_SPP_SRV_STOP_EVT. This funciton must be called after esp_spp_init() successful and before esp_spp_deinit().

Return

- ESP_OK: success
- other: failed

Parameters

- `[in] scn`: Server channel number.

esp_err_t **esp_spp_write**(uint32_t *handle*, int *len*, uint8_t **p_data*)

This function is used to write data, only for ESP_SPP_MODE_CB. When this function need to be called repeatedly, it is strongly recommended to call this function again after the previous event ESP_SPP_WRITE_EVT is received and the parameter 'cong' is equal to false. If the previous event ESP_SPP_WRITE_EVT with parameter 'cong' is equal to true, the function can only be called again when the event ESP_SPP_CONG_EVT with parameter 'cong' equal to false is received. This funciton must be called after an connection between initiator and acceptor has been established.

Return

- ESP_OK: success
- other: failed

Parameters

- `[in] handle`: The connection handle.
- `[in] len`: The length of the data written.
- `[in] p_data`: The data written.

esp_err_t **esp_spp_vfs_register**(void)

This function is used to register VFS. For now, SPP only supports write, read and close.

Return

- ESP_OK: success
- other: failed

Unions

union esp_spp_cb_param_t

#include <esp_spp_api.h> SPP callback parameters union.

Public Members

struct *esp_spp_cb_param_t*::*spp_init_evt_param* **init**
SPP callback param of SPP_INIT_EVT

struct *esp_spp_cb_param_t*::*spp_uninit_evt_param* **uninit**
SPP callback param of SPP_UNINIT_EVT

struct *esp_spp_cb_param_t*::*spp_discovery_comp_evt_param* **disc_comp**
SPP callback param of SPP_DISCOVERY_COMP_EVT

struct *esp_spp_cb_param_t*::*spp_open_evt_param* **open**
SPP callback param of ESP_SPP_OPEN_EVT

struct *esp_spp_cb_param_t*::*spp_srv_open_evt_param* **srv_open**
SPP callback param of ESP_SPP_SRV_OPEN_EVT

struct *esp_spp_cb_param_t*::*spp_close_evt_param* **close**
SPP callback param of ESP_SPP_CLOSE_EVT

struct *esp_spp_cb_param_t*::*spp_start_evt_param* **start**
SPP callback param of ESP_SPP_START_EVT

struct *esp_spp_cb_param_t*::*spp_srv_stop_evt_param* **srv_stop**
SPP callback param of ESP_SPP_SRV_STOP_EVT

struct *esp_spp_cb_param_t*::*spp_cl_init_evt_param* **cl_init**
SPP callback param of ESP_SPP_CL_INIT_EVT

struct *esp_spp_cb_param_t*::*spp_write_evt_param* **write**
SPP callback param of ESP_SPP_WRITE_EVT

struct *esp_spp_cb_param_t*::*spp_data_ind_evt_param* **data_ind**
SPP callback param of ESP_SPP_DATA_IND_EVT

struct *esp_spp_cb_param_t*::*spp_cong_evt_param* **cong**
SPP callback param of ESP_SPP_CONG_EVT

struct spp_cl_init_evt_param
#include <esp_spp_api.h> ESP_SPP_CL_INIT_EVT.

Public Members

esp_spp_status_t **status**
status

uint32_t **handle**
The connection handle

uint8_t **sec_id**
security ID used by this server

bool **use_co**
TRUE to use co_rfc_data

struct spp_close_evt_param
#include <esp_spp_api.h> ESP_SPP_CLOSE_EVT.

Public Members

esp_spp_status_t **status**
status

uint32_t **port_status**
PORT status

uint32_t **handle**
The connection handle

bool **async**
FALSE, if local initiates disconnect

struct spp_cong_evt_param
#include <*esp_spp_api.h*> ESP_SPP_CONG_EVT.

Public Members

esp_spp_status_t **status**
status

uint32_t **handle**
The connection handle

bool **cong**
TRUE, congested. FALSE, uncongested

struct spp_data_ind_evt_param
#include <*esp_spp_api.h*> ESP_SPP_DATA_IND_EVT.

Public Members

esp_spp_status_t **status**
status

uint32_t **handle**
The connection handle

uint16_t **len**
The length of data

uint8_t ***data**
The data received

struct spp_discovery_comp_evt_param
#include <*esp_spp_api.h*> SPP_DISCOVERY_COMP_EVT.

Public Members

esp_spp_status_t **status**
status

uint8_t **scn_num**
The num of scn_num

uint8_t **scn**[**ESP_SPP_MAX_SCN**]
channel #

const char ***service_name**[**ESP_SPP_MAX_SCN**]
service_name

struct spp_init_evt_param
#include <*esp_spp_api.h*> SPP_INIT_EVT.

Public Members

esp_spp_status_t **status**
status

struct spp_open_evt_param
#include <esp_spp_api.h> ESP_SPP_OPEN_EVT.

Public Members

esp_spp_status_t **status**
status

uint32_t **handle**
The connection handle

int **fd**
The file descriptor only for ESP_SPP_MODE_VFS

esp_bd_addr_t **rem_bda**
The peer address

struct spp_srv_open_evt_param
#include <esp_spp_api.h> ESP_SPP_SRV_OPEN_EVT.

Public Members

esp_spp_status_t **status**
status

uint32_t **handle**
The connection handle

uint32_t **new_listen_handle**
The new listen handle

int **fd**
The file descriptor only for ESP_SPP_MODE_VFS

esp_bd_addr_t **rem_bda**
The peer address

struct spp_srv_stop_evt_param
#include <esp_spp_api.h> ESP_SPP_SRV_STOP_EVT.

Public Members

esp_spp_status_t **status**
status

uint8_t **scn**
Server channel number

struct spp_start_evt_param
#include <esp_spp_api.h> ESP_SPP_START_EVT.

Public Members

esp_spp_status_t **status**
status

uint32_t **handle**
The connection handle

uint8_t **sec_id**
security ID used by this server

uint8_t **scn**
Server channel number

bool **use_co**
TRUE to use co_rfc_data

struct spp_uninit_evt_param
#include <esp_spp_api.h> SPP_UNINIT_EVT.

Public Members

esp_spp_status_t **status**
status

struct spp_write_evt_param
#include <esp_spp_api.h> ESP_SPP_WRITE_EVT.

Public Members

esp_spp_status_t **status**
status

uint32_t **handle**
The connection handle

int **len**
The length of the data written.

bool **cong**
congestion status

Macros

ESP_SPP_SEC_NONE
No security. relate to BTA_SEC_NONE in bta/bta_api.h

ESP_SPP_SEC_AUTHORIZE
Authorization required (only needed for out going connection) relate to BTA_SEC_AUTHORIZE in bta/bta_api.h

ESP_SPP_SEC_AUTHENTICATE
Authentication required. relate to BTA_SEC_AUTHENTICATE in bta/bta_api.h

ESP_SPP_SEC_ENCRYPT
Encryption required. relate to BTA_SEC_ENCRYPT in bta/bta_api.h

ESP_SPP_SEC_MODE4_LEVEL4
Mode 4 level 4 service, i.e. incoming/outgoing MITM and P-256 encryption relate to BTA_SEC_MODE4_LEVEL4 in bta/bta_api.h

ESP_SPP_SEC_MITM
Man-In-The_Middle protection relate to BTA_SEC_MITM in bta/bta_api.h

ESP_SPP_SEC_IN_16_DIGITS
Min 16 digit for pin code relate to BTA_SEC_IN_16_DIGITS in bta/bta_api.h

ESP_SPP_MAX_MTU
SPP max MTU

ESP_SPP_MAX_SCN
SPP max SCN

Type Definitions

typedef uint16_t **esp_spp_sec_t**

typedef void (***esp_spp_cb_t**) (*esp_spp_cb_event_t* event, *esp_spp_cb_param_t* *param)
SPP callback function type. When handle ESP_SPP_DATA_IND_EVT, it is strongly recommended to cache incoming data, and process them in other lower priority application task rather than in this callback directly.

Parameters
- `event`: Event type
- `param`: Point to callback parameter, currently is union type

Enumerations

enum esp_spp_status_t
Values:

ESP_SPP_SUCCESS = 0
Successful operation.

ESP_SPP_FAILURE
Generic failure.

ESP_SPP_BUSY
Temporarily can not handle this request.

ESP_SPP_NO_DATA
No data

ESP_SPP_NO_RESOURCE
No more resource

ESP_SPP_NEED_INIT
SPP module shall init first

ESP_SPP_NEED_DEINIT
SPP module shall deinit first

ESP_SPP_NO_CONNECTION
Connection may have been closed

ESP_SPP_NO_SERVER
No SPP server

enum esp_spp_role_t
Values:

ESP_SPP_ROLE_MASTER = 0
Role: master

ESP_SPP_ROLE_SLAVE = 1
Role: slave

enum esp_spp_mode_t
Values:

ESP_SPP_MODE_CB = 0
When data is coming, a callback will come with data

ESP_SPP_MODE_VFS = 1
Use VFS to write/read data

enum esp_spp_cb_event_t
SPP callback function events.

Values:

ESP_SPP_INIT_EVT = 0
When SPP is inited, the event comes

ESP_SPP_UNINIT_EVT = 1
When SPP is uninited, the event comes

ESP_SPP_DISCOVERY_COMP_EVT = 8
When SDP discovery complete, the event comes

ESP_SPP_OPEN_EVT = 26
When SPP Client connection open, the event comes

ESP_SPP_CLOSE_EVT = 27
When SPP connection closed, the event comes

ESP_SPP_START_EVT = 28
When SPP server started, the event comes

ESP_SPP_CL_INIT_EVT = 29
When SPP client initiated a connection, the event comes

ESP_SPP_DATA_IND_EVT = 30
When SPP connection received data, the event comes, only for ESP_SPP_MODE_CB

ESP_SPP_CONG_EVT = 31
When SPP connection congestion status changed, the event comes, only for ESP_SPP_MODE_CB

ESP_SPP_WRITE_EVT = 33
When SPP write operation completes, the event comes, only for ESP_SPP_MODE_CB

ESP_SPP_SRV_OPEN_EVT = 34
When SPP Server connection open, the event comes

ESP_SPP_SRV_STOP_EVT = 35
When SPP server stopped, the event comes

HFP DEFINES

API Reference

Header File

- bt/host/bluedroid/api/include/api/esp_hf_defs.h

Macros

ESP_BT_HF_NUMBER_LEN
ESP_BT_HF_OPERATOR_NAME_LEN

BTC_HSAG_SERVICE_NAME

BTC_HFAG_SERVICE_NAME

BTC_HF_SERVICES

BTC_HF_SERVICE_NAMES

BTC_HF_SECURITY

BTC_HF_CALL_END_TIMEOUT

BTC_HF_INVALID_IDX

Type Definitions

typedef void (***esp_hf_connection_state_callback**)(*esp_hf_connection_state_t* state, *esp_bd_addr_t* *bd_addr)

Callback for connection state change. state will have one of the values from BtHfConnectionState

typedef void (***esp_hf_audio_state_callback**)(*esp_hf_audio_state_t* state, *esp_bd_addr_t* *bd_addr)

Callback for audio connection state change. state will have one of the values from BtHfAudioState

typedef void (***esp_hf_vr_cmd_callback**)(*esp_hf_vr_state_t* state, *esp_bd_addr_t* *bd_addr)

Callback for VR connection state change. state will have one of the values from BtHfVRState

typedef void (***esp_hf_answer_call_cmd_callback**)(*esp_bd_addr_t* *bd_addr)

Callback for answer incoming call (ATA)

typedef void (***esp_hf_hangup_call_cmd_callback**)(*esp_bd_addr_t* *bd_addr)

Callback for disconnect call (AT+CHUP)

typedef void (***esp_hf_volume_cmd_callback**)(*esp_hf_volume_control_target_t* type, int volume, *esp_bd_addr_t* *bd_addr)

Callback for disconnect call (AT+CHUP) type will denote Speaker/Mic gain (BtHfVolumeControl).

typedef void (***esp_hf_dial_call_cmd_callback**)(char *number, *esp_bd_addr_t* *bd_addr)

Callback for dialing an outgoing call If number is NULL, redial

typedef void (***esp_hf_dtmf_cmd_callback**)(char tone, *esp_bd_addr_t* *bd_addr)

Callback for sending DTMF tones tone contains the dtmf character to be sent

typedef void (***esp_hf_nrec_cmd_callback**)(*esp_hf_nrec_t* nrec, *esp_bd_addr_t* *bd_addr)

Callback for enabling/disabling noise reduction/echo cancellation value will be 1 to enable, 0 to disable

typedef void (***esp_hf_wbs_callback**)(*esp_hf_wbs_config_t* wbs, *esp_bd_addr_t* *bd_addr)

Callback for AT+BCS and event from BAC WBS enable, WBS disable

typedef void (***esp_hf_chld_cmd_callback**)(*esp_hf_chld_type_t* chld, *esp_bd_addr_t* *bd_addr)

Callback for call hold handling (AT+CHLD) value will contain the call hold command (0, 1, 2, 3)

typedef void (***esp_hf_cnum_cmd_callback**)(*esp_bd_addr_t* *bd_addr)

Callback for CNUM (subscriber number)

typedef void (***esp_hf_cind_cmd_callback**)(*esp_bd_addr_t* *bd_addr)

Callback for indicators (CIND)

typedef void (***esp_hf_cops_cmd_callback**)(*esp_bd_addr_t* *bd_addr)

Callback for operator selection (COPS)

typedef void (***esp_hf_clcc_cmd_callback**)(*esp_bd_addr_t* *bd_addr)

Callback for call list (AT+CLCC)

typedef void (***esp_hf_unknown_at_cmd_callback**)(char *at_string, *esp_bd_addr_t* *bd_addr)

Callback for unknown AT command recd from AG at_string will contain the unparsed AT string

typedef void (***esp_hf_key_pressed_cmd_callback**)(*esp_bd_addr_t* *bd_addr)

Callback for keypressed (HSP) event.

Enumerations

enum esp_hf_in_band_ring_state_t

in-band ring tone state

Values:

ESP_HF_IN_BAND_RINGTONE_NOT_PROVIDED = 0

ESP_HF_IN_BAND_RINGTONE_PROVIDED

enum esp_hf_vr_state_t

voice recognition state

Values:

ESP_HF_VR_STATE_DISABLED = 0

voice recognition disabled

ESP_HF_VR_STATE_ENABLED

voice recognition enabled

enum esp_hf_volume_control_target_t

Bluetooth HFP audio volume control target.

Values:

ESP_HF_VOLUME_CONTROL_TARGET_SPK = 0

speaker

ESP_HF_VOLUME_CONTROL_TARGET_MIC

microphone

enum esp_hf_audio_state_t

Bluetooth HFP audio connection status.

Values:

ESP_HF_AUDIO_STATE_DISCONNECTED = 0

audio connection released

ESP_HF_AUDIO_STATE_CONNECTING

audio connection has been initiated

ESP_HF_AUDIO_STATE_CONNECTED

audio connection is established

ESP_HF_AUDIO_STATE_CONNECTED_MSBC

mSBC audio connection is established

enum esp_hf_volume_type_t

Values:

ESP_HF_VOLUME_TYPE_SPK = 0

ESP_HF_VOLUME_TYPE_MIC

enum esp_hf_network_state_t

+CIND network service availability status

Values:

ESP_HF_NETWORK_STATE_NOT_AVAILABLE = 0

ESP_HF_NETWORK_STATE_AVAILABLE

enum esp_hf_service_type_t

+CIEV Service type

Values:

ESP_HF_SERVICE_TYPE_HOME = 0

ESP_HF_SERVICE_TYPE_ROAMING

enum esp_hf_call_status_t

+CIND call status indicator values

Values:

ESP_HF_CALL_STATUS_NO_CALLS = 0

no call in progress

ESP_HF_CALL_STATUS_CALL_IN_PROGRESS = 1
call is present(active or held)

enum esp_hf_call_setup_status_t
+CIND call setup status indicator values

Values:

ESP_HF_CALL_SETUP_STATUS_IDLE = 0
no call setup in progress

ESP_HF_CALL_SETUP_STATUS_INCOMING = 1
incoming call setup in progress

ESP_HF_CALL_SETUP_STATUS_OUTGOING_DIALING = 2
outgoing call setup in dialing state

ESP_HF_CALL_SETUP_STATUS_OUTGOING_ALERTING = 3
outgoing call setup in alerting state

enum esp_hf_roaming_status_t
+CIND roaming status indicator values

Values:

ESP_HF_ROAMING_STATUS_INACTIVE = 0
roaming is not active

ESP_HF_ROAMING_STATUS_ACTIVE
a roaming is active

enum esp_hf_call_held_status_t
+CIND call held indicator values

Values:

ESP_HF_CALL_HELD_STATUS_NONE = 0
no calls held

ESP_HF_CALL_HELD_STATUS_HELD_AND_ACTIVE = 1
both active and held call

ESP_HF_CALL_HELD_STATUS_HELD = 2
call on hold, no active call

enum esp_hf_current_call_status_t
+CLCC status of the call

Values:

ESP_HF_CURRENT_CALL_STATUS_ACTIVE = 0
active

ESP_HF_CURRENT_CALL_STATUS_HELD = 1
held

ESP_HF_CURRENT_CALL_STATUS_DIALING = 2
dialing (outgoing calls only)

ESP_HF_CURRENT_CALL_STATUS_ALERTING = 3
alerting (outgoing calls only)

ESP_HF_CURRENT_CALL_STATUS_INCOMING = 4
incoming (incoming calls only)

ESP_HF_CURRENT_CALL_STATUS_WAITING = 5
waiting (incoming calls only)

ESP_HF_CURRENT_CALL_STATUS_HELD_BY_RESP_HOLD = 6
call held by response and hold

enum esp_hf_current_call_direction_t
+CLCC direction of the call

Values:

ESP_HF_CURRENT_CALL_DIRECTION_OUTGOING = 0
outgoing

ESP_HF_CURRENT_CALL_DIRECTION_INCOMING = 1
incoming

enum esp_hf_current_call_mpty_type_t
+CLCC multi-party call flag

Values:

ESP_HF_CURRENT_CALL_MPTY_TYPE_SINGLE = 0
not a member of a multi-party call

ESP_HF_CURRENT_CALL_MPTY_TYPE_MULTI = 1
member of a multi-party call

enum esp_hf_current_call_mode_t
+CLCC call mode

Values:

ESP_HF_CURRENT_CALL_MODE_VOICE = 0

ESP_HF_CURRENT_CALL_MODE_DATA = 1

ESP_HF_CURRENT_CALL_MODE_FAX = 2

enum esp_hf_call_addr_type_t
+CLCC address type

Values:

ESP_HF_CALL_ADDR_TYPE_UNKNOWN = 0x81
unkown address type

ESP_HF_CALL_ADDR_TYPE_INTERNATIONAL = 0x91
international address

enum esp_hf_subscriber_service_type_t
+CNUM service type of the phone number

Values:

ESP_HF_SUBSCRIBER_SERVICE_TYPE_UNKNOWN = 0
unknown

ESP_HF_SUBSCRIBER_SERVICE_TYPE_VOICE
voice service

ESP_HF_SUBSCRIBER_SERVICE_TYPE_FAX
fax service

enum esp_hf_btrh_status_t
+BTRH response and hold result code

Values:

ESP_HF_BTRH_STATUS_HELD = 0
incoming call is put on held in AG

ESP_HF_BTRH_STATUS_ACCEPTED
held incoming call is accepted in AG

ESP_HF_BTRH_STATUS_REJECTED
held incoming call is rejected in AG

enum esp_hf_btrh_cmd_t

AT+BTRH response and hold action code.

Values:

ESP_HF_BTRH_CMD_HOLD = 0

put the incoming call on hold

ESP_HF_BTRH_CMD_ACCEPT = 1

accept a held incoming call

ESP_HF_BTRH_CMD_REJECT = 2

reject a held incoming call

enum esp_hf_nrec_t

Values:

ESP_HF_NREC_STOP = 0

ESP_HF_NREC_START

enum esp_hf_call_waiting_status_t

+CCWA resposne status

Values:

ESP_HF_CALL_WAITING_INACTIVE

ESP_HF_CALL_WAITING_ACTIVE

enum esp_hf_wbs_config_t

Values:

ESP_HF_WBS_NONE

ESP_HF_WBS_NO

ESP_HF_WBS_YES

enum esp_hf_connection_state_t

Bluetooth HFP RFCOMM connection and service level connection status.

Values:

ESP_HF_CONNECTION_STATE_DISCONNECTED = 0

RFCOMM data link channel released

ESP_HF_CONNECTION_STATE_CONNECTING

connecting remote device on the RFCOMM data link

ESP_HF_CONNECTION_STATE_CONNECTED

RFCOMM connection established

ESP_HF_CONNECTION_STATE_SLC_CONNECTED

service level connection established

ESP_HF_CONNECTION_STATE_DISCONNECTING

disconnecting with remote device on the RFCOMM data link

enum esp_hf_chld_type_t

AT+CHLD command values.

Values:

ESP_HF_CHLD_TYPE_REL = 0

<0>, Terminate all held or set UDUB(“busy”) to a waiting call

ESP_HF_CHLD_TYPE_REL_ACC

<1>, Terminate all active calls and accepts a waiting/held call

ESP_HF_CHLD_TYPE_HOLD_ACC

<2>, Hold all active calls and accepts a waiting/held call

ESP_HF_CHLD_TYPE_MERGE
<3>, Add all held calls to a conference

ESP_HF_CHLD_TYPE_MERGE_DETACH
<4>, connect the two calls and disconnects the subscriber from both calls

ESP_HF_CHLD_TYPE_REL_X
<1x>, releases specified calls only

ESP_HF_CHLD_TYPE_PRIV_X
<2x>, request private consultation mode with specified call

enum esp_hf_at_response_code_t
Values:

ESP_HF_AT_RESPONSE_CODE_OK = 0
acknowledges execution of a command line

ESP_HF_AT_RESPONSE_CODE_ERR
command not accepted

ESP_HF_AT_RESPONSE_CODE_NO_CARRIER
connection terminated

ESP_HF_AT_RESPONSE_CODE_BUSY
busy signal detected

ESP_HF_AT_RESPONSE_CODE_NO_ANSWER
connection completion timeout

ESP_HF_AT_RESPONSE_CODE_DELAYED
delayed

ESP_HF_AT_RESPONSE_CODE_BLACKLISTED
blacklisted

ESP_HF_AT_RESPONSE_CODE_CME
CME error

enum esp_hf_at_response_t
Values:

ESP_HF_AT_RESPONSE_ERROR = 0

ESP_HF_AT_RESPONSE_OK

enum esp_hf_cme_err_t
Extended Audio Gateway Error Result Code Response.

Values:

ESP_HF_CME_AG_FAILURE = 0
ag failure

ESP_HF_CME_NO_CONNECTION_TO_PHONE = 1
no connection to phone

ESP_HF_CME_OPERATION_NOT_ALLOWED = 3
operation not allowed

ESP_HF_CME_OPERATION_NOT_SUPPORTED = 4
operation not supported

ESP_HF_CME_PH_SIM_PIN_REQUIRED = 5
PH-SIM PIN Required

ESP_HF_CME_SIM_NOT_INSERTED = 10
SIM not inserted

ESP_HF_CME_SIM_PIN_REQUIRED = 11
SIM PIN required

ESP_HF_CME_SIM_PUK_REQUIRED = 12
SIM PUK required

ESP_HF_CME_SIM_FAILURE = 13
SIM failure

ESP_HF_CME_SIM_BUSY = 14
SIM busy

ESP_HF_CME_INCORRECT_PASSWORD = 16
incorrect password

ESP_HF_CME_SIM_PIN2_REQUIRED = 17
SIM PIN2 required

ESP_HF_CME_SIM_PUK2_REQUIRED = 18
SIM PUK2 required

ESP_HF_CME_MEMEORY_FULL = 20
memory full

ESP_HF_CME_INVALID_INDEX = 21
invalid index

ESP_HF_CME_MEMEORY_FAILURE = 23
memory failure

ESP_HF_CME_TEXT_STRING_TOO_LONG = 24
test string too long

ESP_HF_CME_INVALID_CHARACTERS_IN_TEXT_STRING = 25
invalid characters in text string

ESP_HF_CME_DIAL_STRING_TOO_LONG = 26
dial string too long

ESP_HF_CME_INVALID_CHARACTERS_IN_DIAL_STRING = 27
invalid characters in dial string

ESP_HF_CME_NO_NETWORK_SERVICE = 30
no network service

ESP_HF_CME_NETWORK_TIMEOUT = 31
network timeout

ESP_HF_CME_NETWORK_NOT_ALLOWED = 32
network not allowed emergency calls only

HFP CLIENT API

API Reference

Header File

- bt/host/bluedroid/api/include/api/esp_hf_client_api.h

Functions

esp_err_t **esp_hf_client_register_callback**(*esp_hf_client_cb_t callback*)
Register application callback function to HFP client module. This function should be called only after esp_bluedroid_enable() completes successfully.

Return

- ESP_OK: success
- ESP_INVALID_STATE: if bluetooth stack is not yet enabled
- ESP_FAIL: if callback is a NULL function pointer

Parameters

- `[in] callback`: HFP client event callback function

esp_err_t **esp_hf_client_init** (void)

Initialize the bluetooth HFP client module. This function should be called after esp_bluedroid_enable() completes successfully.

Return

- ESP_OK: if the initialization request is sent successfully
- ESP_INVALID_STATE: if bluetooth stack is not yet enabled
- ESP_FAIL: others

esp_err_t **esp_hf_client_deinit** (void)

De-initialize for HFP client module. This function should be called only after esp_bluedroid_enable() completes successfully.

Return

- ESP_OK: success
- ESP_INVALID_STATE: if bluetooth stack is not yet enabled
- ESP_FAIL: others

esp_err_t **esp_hf_client_connect** (*esp_bd_addr_t remote_bda*)

Establish a Service Level Connection to remote bluetooth HFP audio gateway(AG) device. This function must be called after esp_hf_client_init() and before esp_hf_client_deinit().

Return

- ESP_OK: connect request is sent to lower layer
- ESP_INVALID_STATE: if bluetooth stack is not yet enabled
- ESP_FAIL: others

Parameters

- `[in] remote_bda`: remote bluetooth device address

esp_err_t **esp_hf_client_disconnect** (*esp_bd_addr_t remote_bda*)

Disconnect from the remote HFP audio gateway. This function must be called after esp_hf_client_init() and before esp_hf_client_deinit().

Return

- ESP_OK: disconnect request is sent to lower layer
- ESP_INVALID_STATE: if bluetooth stack is not yet enabled
- ESP_FAIL: others

Parameters

- `[in] remote_bda`: remote bluetooth device address

esp_err_t **esp_hf_client_connect_audio** (*esp_bd_addr_t remote_bda*)

Create audio connection with remote HFP AG. As a precondition to use this API, Service Level Connection shall exist with AG.

Return

- ESP_OK: disconnect request is sent to lower layer
- ESP_INVALID_STATE: if bluetooth stack is not yet enabled
- ESP_FAIL: others

Parameters

- `[in] remote_bda`: remote bluetooth device address

esp_err_t **esp_hf_client_disconnect_audio** (*esp_bd_addr_t remote_bda*)

Release the established audio connection with remote HFP AG. As a precondition to use this API, Service Level Connection shall exist with AG.

Return

- ESP_OK: disconnect request is sent to lower layer
- ESP_INVALID_STATE: if bluetooth stack is not yet enabled
- ESP_FAIL: others

Parameters

- `[in] remote_bda`: remote bluetooth device address

esp_err_t **esp_hf_client_start_voice_recognition**(void)

Enable voice recognition in the AG. As a precondition to use this API, Service Level Connection shall exist with AG.

Return

- ESP_OK: disconnect request is sent to lower layer
- ESP_INVALID_STATE: if bluetooth stack is not yet enabled
- ESP_FAIL: others

esp_err_t **esp_hf_client_stop_voice_recognition**(void)

Disable voice recognition in the AG. As a precondition to use this API, Service Level Connection shall exist with AG.

Return

- ESP_OK: disconnect request is sent to lower layer
- ESP_INVALID_STATE: if bluetooth stack is not yet enabled
- ESP_FAIL: others

esp_err_t **esp_hf_client_volume_update**(*esp_hf_volume_control_target_t type*, int *volume*)

Volume synchronization with AG. As a precondition to use this API, Service Level Connection shall exist with AG.

Return

- ESP_OK: disconnect request is sent to lower layer
- ESP_INVALID_STATE: if bluetooth stack is not yet enabled
- ESP_FAIL: others

Parameters

- `[in] type`: volume control target, speaker or microphone
- `[in] volume`: gain of the speaker of microphone, ranges 0 to 15

esp_err_t **esp_hf_client_dial**(**const** char **number*)

Place a call with a specified number, if number is NULL, last called number is called. As a precondition to use this API, Service Level Connection shall exist with AG.

Return

- ESP_OK: disconnect request is sent to lower layer
- ESP_INVALID_STATE: if bluetooth stack is not yet enabled
- ESP_FAIL: others

Parameters

- `[in] number`: number string of the call. If NULL, the last number is called(aka re-dial)

esp_err_t **esp_hf_client_dial_memory**(int *location*)

Place a call with number specified by location(speed dial). As a precondition to use this API, Service Level Connection shall exist with AG.

Return

- ESP_OK: disconnect request is sent to lower layer
- ESP_INVALID_STATE: if bluetooth stack is not yet enabled
- ESP_FAIL: others

Parameters

- `[in] location`: location of the number in the memory

esp_err_t **esp_hf_client_send_chld_cmd**(*esp_hf_chld_type_t chld*, int *idx*)

Send call hold and multiparty commands, or enhanced call control commands(Use AT+CHLD). As a precondition to use this API, Service Level Connection shall exist with AG.

Return

- ESP_OK: disconnect request is sent to lower layer
- ESP_INVALID_STATE: if bluetooth stack is not yet enabled
- ESP_FAIL: others

Parameters

- `[in] chld`: AT+CHLD call hold and multiparty handling AT command.
- `[in] idx`: used in Enhanced Call Control Mechanisms, used if chld is ESP_HF_CHLD_TYPE_REL_X or ESP_HF_CHLD_TYPE_PRIV_X

esp_err_t **esp_hf_client_send_btrh_cmd**(*esp_hf_btrh_cmd_t btrh*)

Send response and hold action command(Send AT+BTRH command) As a precondition to use this API, Service Level Connection shall exist with AG.

Return

- ESP_OK: disconnect request is sent to lower layer
- ESP_INVALID_STATE: if bluetooth stack is not yet enabled
- ESP_FAIL: others

Parameters

- `[in] btrh`: response and hold action to send

esp_err_t **esp_hf_client_answer_call**(void)

Answer an incoming call(send ATA command). As a precondition to use this API, Service Level Connection shall exist with AG.

Return

- ESP_OK: disconnect request is sent to lower layer
- ESP_INVALID_STATE: if bluetooth stack is not yet enabled
- ESP_FAIL: others

esp_err_t **esp_hf_client_reject_call**(void)

Reject an incoming call(send AT+CHUP command). As a precondition to use this API, Service Level Connection shall exist with AG.

Return

- ESP_OK: disconnect request is sent to lower layer
- ESP_INVALID_STATE: if bluetooth stack is not yet enabled
- ESP_FAIL: others

esp_err_t **esp_hf_client_query_current_calls**(void)

Query list of current calls in AG(send AT+CLCC command). As a precondition to use this API, Service Level Connection shall exist with AG.

Return

- ESP_OK: disconnect request is sent to lower layer
- ESP_INVALID_STATE: if bluetooth stack is not yet enabled
- ESP_FAIL: others

esp_err_t **esp_hf_client_query_current_operator_name**(void)

Query the name of currently selected network operator in AG(use AT+COPS commands). As a precondition to use this API, Service Level Connection shall exist with AG.

Return

- ESP_OK: disconnect request is sent to lower layer
- ESP_INVALID_STATE: if bluetooth stack is not yet enabled
- ESP_FAIL: others

esp_err_t **esp_hf_client_retrieve_subscriber_info**(void)

Get subscriber information number from AG(send AT+CNUM command) As a precondition to use this API, Service Level Connection shall exist with AG.

Return

- ESP_OK: disconnect request is sent to lower layer
- ESP_INVALID_STATE: if bluetooth stack is not yet enabled
- ESP_FAIL: others

esp_err_t **esp_hf_client_send_dtmf**(char *code*)

Transmit DTMF codes during an ongoing call(use AT+VTS commands) As a precondition to use this API, Service Level Connection shall exist with AG.

Return

- ESP_OK: disconnect request is sent to lower layer
- ESP_INVALID_STATE: if bluetooth stack is not yet enabled
- ESP_FAIL: others

Parameters

- `[in] code`: dtmf code, single ascii character in the set 0-9, #, *, A-D

esp_err_t **esp_hf_client_request_last_voice_tag_number** (void)

Request a phone number from AG corresponding to last voice tag recorded (send AT+BINP command). As a precondition to use this API, Service Level Connection shall exist with AG.

Return

- ESP_OK: disconnect request is sent to lower layer
- ESP_INVALID_STATE: if bluetooth stack is not yet enabled
- ESP_FAIL: others

esp_err_t **esp_hf_client_send_nrec** (void)

Disable echo cancellation and noise reduction in the AG (use AT+NREC=0 command). As a precondition to use this API, Service Level Connection shall exist with AG.

Return

- ESP_OK: NREC=0 request is sent to lower layer
- ESP_INVALID_STATE: if bluetooth stack is not yet enabled
- ESP_FAIL: others

esp_err_t **esp_hf_client_register_data_callback** (*esp_hf_client_incoming_data_cb_t* *recv*, *esp_hf_client_outgoing_data_cb_t* *send*)

Register HFP client data output function; the callback is only used in the case that Voice Over HCI is enabled.

Return

- ESP_OK: success
- ESP_INVALID_STATE: if bluetooth stack is not yet enabled
- ESP_FAIL: if callback is a NULL function pointer

Parameters

- `[in] recv`: HFP client incoming data callback function
- `[in] send`: HFP client outgoing data callback function

void **esp_hf_client_outgoing_data_ready** (void)

Trigger the lower-layer to fetch and send audio data. This function is only only used in the case that Voice Over HCI is enabled. After this function is called, lower layer will invoke esp_hf_client_outgoing_data_cb_t to fetch data.

As a precondition to use this API, Service Level Connection shall exist with AG.

void **esp_hf_client_pcm_resample_init** (uint32_t *src_sps*, uint32_t *bits*, uint32_t *channels*)

Initialize the down sampling converter. This is a utility function that can only be used in the case that Voice Over HCI is enabled.

Parameters

- `[in] src_sps`: original samples per second(source audio data, i.e. 48000, 32000, 16000, 44100, 22050, 11025)
- `[in] bits`: number of bits per pcm sample (16)
- `[in] channels`: number of channels (i.e. mono(1), stereo(2)···)

void **esp_hf_client_pcm_resample_deinit** (void)

Deinitialize the down sampling converter.

int32_t **esp_hf_client_pcm_resample** (void **src*, uint32_t *in_bytes*, void **dst*)

Down sampling utility to convert high sampling rate into 8K/16bits 1-channel mode PCM samples. This can only be used in the case that Voice Over HCI is enabled.

Return number of samples converted

Parameters

- `[in] src`: pointer to the buffer where the original sampling PCM are stored
- `[in] in_bytes`: length of the input PCM sample buffer in byte
- `[in] dst`: pointer to the buffer which is to be used to store the converted PCM samples

Unions

union esp_hf_client_cb_param_t

#include <esp_hf_client_api.h> HFP client callback parameters.

Public Members

struct *esp_hf_client_cb_param_t*::*hf_client_conn_stat_param* **conn_stat**
HF callback param of ESP_HF_CLIENT_CONNECTION_STATE_EVT

struct *esp_hf_client_cb_param_t*::*hf_client_audio_stat_param* **audio_stat**
HF callback param of ESP_HF_CLIENT_AUDIO_STATE_EVT

struct *esp_hf_client_cb_param_t*::*hf_client_bvra_param* **bvra**
HF callback param of ESP_HF_CLIENT_BVRA_EVT

struct *esp_hf_client_cb_param_t*::*hf_client_service_availability_param* **service_availability**
HF callback param of ESP_HF_CLIENT_CIND_SERVICE_AVAILABILITY_EVT

struct *esp_hf_client_cb_param_t*::*hf_client_network_roaming_param* **roaming**
HF callback param of ESP_HF_CLIENT_CIND_ROAMING_STATUS_EVT

struct *esp_hf_client_cb_param_t*::*hf_client_signal_strength_ind_param* **signal_strength**
HF callback param of ESP_HF_CLIENT_CIND_SIGNAL_STRENGTH_EVT

struct *esp_hf_client_cb_param_t*::*hf_client_battery_level_ind_param* **battery_level**
HF callback param of ESP_HF_CLIENT_CIND_BATTERY_LEVEL_EVT

struct *esp_hf_client_cb_param_t*::*hf_client_current_operator_param* **cops**
HF callback param of ESP_HF_CLIENT_COPS_CURRENT_OPERATOR_EVT

struct *esp_hf_client_cb_param_t*::*hf_client_call_ind_param* **call**
HF callback param of ESP_HF_CLIENT_CIND_CALL_EVT

struct *esp_hf_client_cb_param_t*::*hf_client_call_setup_ind_param* **call_setup**
HF callback param of ESP_HF_CLIENT_BVRA_EVT

struct *esp_hf_client_cb_param_t*::*hf_client_call_held_ind_param* **call_held**
HF callback param of ESP_HF_CLIENT_CIND_CALL_HELD_EVT

struct *esp_hf_client_cb_param_t*::*hf_client_btrh_param* **btrh**
HF callback param of ESP_HF_CLIENT_BRTH_EVT

struct *esp_hf_client_cb_param_t*::*hf_client_clip_param* **clip**
HF callback param of ESP_HF_CLIENT_CLIP_EVT

struct *esp_hf_client_cb_param_t*::*hf_client_ccwa_param* **ccwa**
HF callback param of ESP_HF_CLIENT_BVRA_EVT

struct *esp_hf_client_cb_param_t*::*hf_client_clcc_param* **clcc**
HF callback param of ESP_HF_CLIENT_CLCC_EVT

struct *esp_hf_client_cb_param_t*::*hf_client_volume_control_param* **volume_control**
HF callback param of ESP_HF_CLIENT_VOLUME_CONTROL_EVT

struct *esp_hf_client_cb_param_t*::*hf_client_at_response_param* **at_response**
HF callback param of ESP_HF_CLIENT_AT_RESPONSE_EVT

struct *esp_hf_client_cb_param_t*::*hf_client_cnum_param* **cnum**
HF callback param of ESP_HF_CLIENT_CNUM_EVT

struct *esp_hf_client_cb_param_t*::*hf_client_bsirparam* **bsir**
HF callback param of ESP_HF_CLIENT_BSIR_EVT

struct *esp_hf_client_cb_param_t*::*hf_client_binp_param* **binp**
HF callback param of ESP_HF_CLIENT_BINP_EVT

struct hf_client_at_response_param

#include <esp_hf_client_api.h> ESP_HF_CLIENT_AT_RESPONSE_EVT.

Public Members

esp_hf_at_response_code_t **code**
AT response code

esp_hf_cme_err_t **cme**
Extended Audio Gateway Error Result Code

struct hf_client_audio_stat_param

#include <esp_hf_client_api.h> ESP_HF_CLIENT_AUDIO_STATE_EVT.

Public Members

esp_hf_client_audio_state_t **state**
audio connection state

esp_bd_addr_t **remote_bda**
remote bluetooth device address

struct hf_client_battery_level_ind_param

#include <esp_hf_client_api.h> ESP_HF_CLIENT_CIND_BATTERY_LEVEL_EVT.

Public Members

int **value**
battery charge value, ranges from 0 to 5

struct hf_client_binp_param

#include <esp_hf_client_api.h> ESP_HF_CLIENT_BINP_EVT.

Public Members

const char ***number**
phone number corresponding to the last voice tag in the HF

struct hf_client_bsirparam

#include <esp_hf_client_api.h> ESP_HF_CLIENT_BSIR_EVT.

Public Members

esp_hf_client_in_band_ring_state_t **state**
setting state of in-band ring tone

struct hf_client_btrh_param

#include <esp_hf_client_api.h> ESP_HF_CLIENT_BTRH_EVT.

Public Members

esp_hf_btrh_status_t **status**
call hold and response status result code

struct hf_client_bvra_param

#include <esp_hf_client_api.h> ESP_HF_CLIENT_BVRA_EVT.

Public Members

esp_hf_vr_state_t **value**
voice recognition state

struct hf_client_call_held_ind_param
#include <esp_hf_client_api.h> ESP_HF_CLIENT_CIND_CALL_HELD_EVT.

Public Members

esp_hf_call_held_status_t **status**
bluetooth proprietary call hold status indicator

struct hf_client_call_ind_param
#include <esp_hf_client_api.h> ESP_HF_CLIENT_CIND_CALL_EVT.

Public Members

esp_hf_call_status_t **status**
call status indicator

struct hf_client_call_setup_ind_param
#include <esp_hf_client_api.h> ESP_HF_CLIENT_CIND_CALL_SETUP_EVT.

Public Members

esp_hf_call_setup_status_t **status**
call setup status indicator

struct hf_client_ccwa_param
#include <esp_hf_client_api.h> ESP_HF_CLIENT_CCWA_EVT.

Public Members

const char ***number**
phone number string of waiting call

struct hf_client_clcc_param
#include <esp_hf_client_api.h> ESP_HF_CLIENT_CLCC_EVT.

Public Members

int **idx**
numbering(starting with 1) of the call

esp_hf_current_call_direction_t **dir**
direction of the call

esp_hf_current_call_status_t **status**
status of the call

esp_hf_current_call_mpty_type_t **mpty**
multi-party flag

char ***number**
phone number(optional)

struct hf_client_clip_param

#include <esp_hf_client_api.h> ESP_HF_CLIENT_CLIP_EVT.

Public Members

const char ***number**

phone number string of call

struct hf_client_cnum_param

#include <esp_hf_client_api.h> ESP_HF_CLIENT_CNUM_EVT.

Public Members

const char ***number**

phone number string

esp_hf_subscriber_service_type_t **type**

service type that the phone number relates to

struct hf_client_conn_stat_param

#include <esp_hf_client_api.h> ESP_HF_CLIENT_CONNECTION_STATE_EVT.

Public Members

esp_hf_client_connection_state_t **state**

HF connection state

uint32_t **peer_feat**

AG supported features

uint32_t **chld_feat**

AG supported features on call hold and multiparty services

esp_bd_addr_t **remote_bda**

remote bluetooth device address

struct hf_client_current_operator_param

#include <esp_hf_client_api.h> ESP_HF_CLIENT_COPS_CURRENT_OPERATOR_EVT.

Public Members

const char ***name**

name of the network operator

struct hf_client_network_roaming_param

#include <esp_hf_client_api.h> ESP_HF_CLIENT_CIND_ROAMING_STATUS_EVT.

Public Members

esp_hf_roaming_status_t **status**

roaming status

struct hf_client_service_availability_param

#include <esp_hf_client_api.h> ESP_HF_CLIENT_CIND_SERVICE_AVAILABILITY_EVT.

Public Members

esp_hf_network_state_t **status**
service availability status

struct hf_client_signal_strength_ind_param
#include <esp_hf_client_api.h> ESP_HF_CLIENT_CIND_SIGNAL_STRENGTH_EVT.

Public Members

int **value**
signal strength value, ranges from 0 to 5

struct hf_client_volume_control_param
#include <esp_hf_client_api.h> ESP_HF_CLIENT_VOLUME_CONTROL_EVT.

Public Members

esp_hf_volume_control_target_t **type**
volume control target, speaker or microphone

int **volume**
gain, ranges from 0 to 15

Macros

ESP_BT_HF_CLIENT_NUMBER_LEN
ESP_BT_HF_CLIENT_OPERATOR_NAME_LEN
ESP_HF_CLIENT_PEER_FEAT_3WAY
ESP_HF_CLIENT_PEER_FEAT_ECNR
ESP_HF_CLIENT_PEER_FEAT_VREC
ESP_HF_CLIENT_PEER_FEAT_INBAND
ESP_HF_CLIENT_PEER_FEAT_VTAG
ESP_HF_CLIENT_PEER_FEAT_REJECT
ESP_HF_CLIENT_PEER_FEAT_ECS
ESP_HF_CLIENT_PEER_FEAT_ECC
ESP_HF_CLIENT_PEER_FEAT_EXTERR
ESP_HF_CLIENT_PEER_FEAT_CODEC
ESP_HF_CLIENT_PEER_FEAT_HF_IND
ESP_HF_CLIENT_PEER_FEAT_ESCO_S4
ESP_HF_CLIENT_CHLD_FEAT_REL
ESP_HF_CLIENT_CHLD_FEAT_REL_ACC
ESP_HF_CLIENT_CHLD_FEAT_REL_X
ESP_HF_CLIENT_CHLD_FEAT_HOLD_ACC
ESP_HF_CLIENT_CHLD_FEAT_PRIV_X
ESP_HF_CLIENT_CHLD_FEAT_MERGE
ESP_HF_CLIENT_CHLD_FEAT_MERGE_DETACH

Type Definitions

typedef void (***esp_hf_client_incoming_data_cb_t**)(**const** uint8_t *buf, uint32_t len)

HFP client incoming data callback function, the callback is useful in case of Voice Over HCI.

Parameters

- `[in] buf`: : pointer to incoming data(payload of HCI synchronous data packet), the buffer is allocated inside bluetooth protocol stack and will be released after invoke of the callback is finished.
- `[in] len`: : size(in bytes) in buf

typedef uint32_t (***esp_hf_client_outgoing_data_cb_t**)(uint8_t *buf, uint32_t len)

HFP client outgoing data callback function, the callback is useful in case of Voice Over HCI. Once audio connection is set up and the application layer has prepared data to send, the lower layer will call this function to read data and then send. This callback is supposed to be implemented as non-blocking, and if data is not enough, return value 0 is supposed.

Return length of data successfully read

Parameters

- `[in] buf`: : pointer to incoming data(payload of HCI synchronous data packet), the buffer is allocated inside bluetooth protocol stack and will be released after invoke of the callback is finished.
- `[in] len`: : size(in bytes) in buf

typedef void (***esp_hf_client_cb_t**)(*esp_hf_client_cb_event_t* event, *esp_hf_client_cb_param_t* *param)

HFP client callback function type.

Parameters

- `event`: : Event type
- `param`: : Pointer to callback parameter

Enumerations

enum esp_hf_client_connection_state_t

Bluetooth HFP RFCOMM connection and service level connection status.

Values:

ESP_HF_CLIENT_CONNECTION_STATE_DISCONNECTED = 0

RFCOMM data link channel released

ESP_HF_CLIENT_CONNECTION_STATE_CONNECTING

connecting remote device on the RFCOMM data link

ESP_HF_CLIENT_CONNECTION_STATE_CONNECTED

RFCOMM connection established

ESP_HF_CLIENT_CONNECTION_STATE_SLC_CONNECTED

service level connection established

ESP_HF_CLIENT_CONNECTION_STATE_DISCONNECTING

disconnecting with remote device on the RFCOMM dat link

enum esp_hf_client_audio_state_t

Bluetooth HFP audio connection status.

Values:

ESP_HF_CLIENT_AUDIO_STATE_DISCONNECTED = 0

audio connection released

ESP_HF_CLIENT_AUDIO_STATE_CONNECTING

audio connection has been initiated

ESP_HF_CLIENT_AUDIO_STATE_CONNECTED

audio connection is established

ESP_HF_CLIENT_AUDIO_STATE_CONNECTED_MSBC

mSBC audio connection is established

enum esp_hf_client_in_band_ring_state_t
in-band ring tone state

Values:

ESP_HF_CLIENT_IN_BAND_RINGTONE_NOT_PROVIDED = 0

ESP_HF_CLIENT_IN_BAND_RINGTONE_PROVIDED

enum esp_hf_client_cb_event_t
HF CLIENT callback events.

Values:

ESP_HF_CLIENT_CONNECTION_STATE_EVT = 0
connection state changed event

ESP_HF_CLIENT_AUDIO_STATE_EVT
audio connection state change event

ESP_HF_CLIENT_BVRA_EVT
voice recognition state change event

ESP_HF_CLIENT_CIND_CALL_EVT
call indication

ESP_HF_CLIENT_CIND_CALL_SETUP_EVT
call setup indication

ESP_HF_CLIENT_CIND_CALL_HELD_EVT
call held indication

ESP_HF_CLIENT_CIND_SERVICE_AVAILABILITY_EVT
network service availability indication

ESP_HF_CLIENT_CIND_SIGNAL_STRENGTH_EVT
signal strength indication

ESP_HF_CLIENT_CIND_ROAMING_STATUS_EVT
roaming status indication

ESP_HF_CLIENT_CIND_BATTERY_LEVEL_EVT
battery level indication

ESP_HF_CLIENT_COPS_CURRENT_OPERATOR_EVT
current operator information

ESP_HF_CLIENT_BTRH_EVT
call response and hold event

ESP_HF_CLIENT_CLIP_EVT
Calling Line Identification notification

ESP_HF_CLIENT_CCWA_EVT
call waiting notification

ESP_HF_CLIENT_CLCC_EVT
list of current calls notification

ESP_HF_CLIENT_VOLUME_CONTROL_EVT
audio volume control command from AG, provided by +VGM or +VGS message

ESP_HF_CLIENT_AT_RESPONSE_EVT
AT command response event

ESP_HF_CLIENT_CNUM_EVT
subscriber information response from AG

ESP_HF_CLIENT_BSIR_EVT
setting of in-band ring tone

ESP_HF_CLIENT_BINP_EVT
requested number of last voice tag from AG

ESP_HF_CLIENT_RING_IND_EVT
ring indication event

HFP AG API

API Reference

Header File

- bt/host/bluedroid/api/include/api/esp_hf_ag_api.h

Functions

esp_err_t **esp_bt_hf_register_callback**(*esp_hf_cb_t callback*)
Register application callback function to HFP AG module. This function should be called only after esp_bluedroid_enable() completes successfully.

Return
- ESP_OK: success
- ESP_INVALID_STATE: if bluetooth stack is not yet enabled
- ESP_FAIL: if callback is a NULL function pointer

Parameters
- `[in] callback`: HFP AG event callback function

esp_err_t **esp_bt_hf_init**(*esp_bd_addr_t remote_addr*)
Initialize the bluetooth HF AG module. This function should be called after esp_bluedroid_enable() completes successfully.

Return
- ESP_OK: if the initialization request is sent successfully
- ESP_INVALID_STATE: if bluetooth stack is not yet enabled
- ESP_FAIL: others

Parameters
- `[in] remote_addr`: remote bluetooth device address

esp_err_t **esp_bt_hf_deinit**(*esp_bd_addr_t remote_addr*)
De-initialize for HF AG module. This function should be called only after esp_bluedroid_enable() completes successfully.

Return
- ESP_OK: success
- ESP_INVALID_STATE: if bluetooth stack is not yet enabled
- ESP_FAIL: others

Parameters
- `[in] remote_addr`: remote bluetooth device address

esp_err_t **esp_bt_hf_connect**(*esp_bd_addr_t remote_bda*)
To establish a Service Level Connection to remote bluetooth HFP client device. This function must be called after esp_bt_hf_init() and before esp_bt_hf_deinit().

Return
- ESP_OK: connect request is sent to lower layer
- ESP_INVALID_STATE: if bluetooth stack is not yet enabled
- ESP_FAIL: others

Parameters
- `[in] remote_bda`: remote bluetooth HFP client device address

esp_err_t **esp_bt_hf_disconnect**(*esp_bd_addr_t remote_bda*)
Disconnect from the remote HFP client. This function must be called after esp_bt_hf_init() and before esp_bt_hf_deinit().

Return

- ESP_OK: disconnect request is sent to lower layer
- ESP_INVALID_STATE: if bluetooth stack is not yet enabled
- ESP_FAIL: others

Parameters

- `[in] remote_bda`: remote bluetooth device address

esp_err_t **esp_bt_hf_connect_audio**(*esp_bd_addr_t remote_bda*)

Create audio connection with remote HFP client. As a precondition to use this API, Service Level Connection shall exist with HFP client.

Return

- ESP_OK: disconnect request is sent to lower layer
- ESP_INVALID_STATE: if bluetooth stack is not yet enabled
- ESP_FAIL: others

Parameters

- `[in] remote_bda`: remote bluetooth device address

esp_err_t **esp_bt_hf_disconnect_audio**(*esp_bd_addr_t remote_bda*)

Release the established audio connection with remote HFP client. As a precondition to use this API, Service Level Connection shall exist with HFP client.

Return

- ESP_OK: disconnect request is sent to lower layer
- ESP_INVALID_STATE: if bluetooth stack is not yet enabled
- ESP_FAIL: others

Parameters

- `[in] remote_bda`: remote bluetooth device address

esp_err_t **esp_bt_hf_vra**(*esp_bd_addr_t remote_bda*, *esp_hf_vr_state_t value*)

Response of Volume Recognition Command(AT+VRA) from HFP client. As a precondition to use this API, Service Level Connection shall exist with HFP client.

Return

- ESP_OK: disconnect request is sent to lower layer
- ESP_INVALID_STATE: if bluetooth stack is not yet enabled
- ESP_FAIL: others

Parameters

- `[in] remote_bda`: the device address of voice recognization initiator
- `[in] value`: 0 - voice recognition disabled, 1- voice recognition enabled

esp_err_t **esp_bt_hf_volume_control**(*esp_bd_addr_t remote_bda*, *esp_hf_volume_control_target_t type*, int *volume*)

Volume synchronization with HFP client. As a precondition to use this API, Service Level Connection shall exist with HFP client.

Return

- ESP_OK: disconnect request is sent to lower layer
- ESP_INVALID_STATE: if bluetooth stack is not yet enabled
- ESP_FAIL: others

Parameters

- `[in] remote_bda`: remote bluetooth device address
- `[in] type`: volume control target, speaker or microphone
- `[in] volume`: gain of the speaker of microphone, ranges 0 to 15

esp_err_t **esp_hf_unat_response**(*esp_bd_addr_t remote_addr*, char **unat*)

Handle Unknown AT command from HFP Client. As a precondition to use this API, Service Level Connection shall exist with HFP client.

Return

- ESP_OK: disconnect request is sent to lower layer
- ESP_INVALID_STATE: if bluetooth stack is not yet enabled
- ESP_FAIL: others

Parameters

- `[in] remote_addr`: remote bluetooth device address
- `[in] unat`: User AT command response to HF Client. It will response "ERROR" by default if unat is NULL.

esp_err_t **esp_bt_hf_cmee_response**(*esp_bd_addr_t remote_bda*, *esp_hf_at_response_code_t response_code*, *esp_hf_cme_err_t error_code*)

Unsolicited send extend AT error code to HFP Client. As a precondition to use this API, Service Level Connection shall exist with HFP client.

Return

- ESP_OK: disconnect request is sent to lower layer
- ESP_INVALID_STATE: if bluetooth stack is not yet enabled
- ESP_FAIL: others

Parameters

- `[in] remote_bda`: remote bluetooth device address
- `[in] response_code`: AT command response code
- `[in] error_code`: CME error code

esp_err_t **esp_bt_hf_indchange_notification**(*esp_bd_addr_t remote_addr*, *esp_hf_call_status_t call_state*, *esp_hf_call_setup_status_t call_setup_state*, *esp_hf_network_state_t ntk_state*, int *signal*)

Usolicited send device status notificationto HFP Client. As a precondition to use this API, Service Level Connection shall exist with HFP client.

Return

- ESP_OK: disconnect request is sent to lower layer
- ESP_INVALID_STATE: if bluetooth stack is not yet enabled
- ESP_FAIL: others

Parameters

- `[in] remote_addr`: remote bluetooth device address
- `[in] call_state`: call state
- `[in] call_setup_state`: call setup state
- `[in] ntk_state`: network service state
- `[in] signal`: signal strength from 0 to 5

esp_err_t **esp_bt_hf_cind_response**(*esp_bd_addr_t remote_addr*, *esp_hf_call_status_t call_state*, *esp_hf_call_setup_status_t call_setup_state*, *esp_hf_network_state_t ntk_state*, int *signal*, *esp_hf_roaming_status_t roam*, int *batt_lev*, *esp_hf_call_held_status_t call_held_status*)

Response to device individual indicatiors to HFP Client. As a precondition to use this API, Service Level Connection shall exist with HFP client.

Return

- ESP_OK: disconnect request is sent to lower layer
- ESP_INVALID_STATE: if bluetooth stack is not yet enabled
- ESP_FAIL: others

Parameters

- `[in] remote_addr`: remote bluetooth device address
- `[in] call_state`: call state
- `[in] call_setup_state`: call setup state
- `[in] ntk_state`: network service state
- `[in] signal`: signal strength from 0 to 5
- `[in] roam`: roam state
- `[in] batt_lev`: batery level from 0 to 5
- `[in] call_held_status`: call held status

esp_err_t **esp_bt_hf_cops_response**(*esp_bd_addr_t remote_addr*, char **name*)

Reponse for AT+COPS command from HF Client. As a precondition to use this API, Service Level Connection shall exist with HFP client.

Return

- ESP_OK: disconnect request is sent to lower layer
- ESP_INVALID_STATE: if bluetooth stack is not yet enabled
- ESP_FAIL: others

Parameters

- `[in] remote_addr`: remote bluetooth device address
- `[in] name`: current operator name

esp_err_t **esp_bt_hf_clcc_response**(*esp_bd_addr_t remote_addr*, int *index*, *esp_hf_current_call_direction_t dir*, *esp_hf_current_call_status_t current_call_state*, *esp_hf_current_call_mode_t mode*, *esp_hf_current_call_mpty_type_t mpty*, char **number*, *esp_hf_call_addr_type_t type*)

Response to AT+CLCC command from HFP Client. As a precondition to use this API, Service Level Connection shall exist with HFP client.

Return

- ESP_OK: disconnect request is sent to lower layer
- ESP_INVALID_STATE: if bluetooth stack is not yet enabled
- ESP_FAIL: others

Parameters

- `[in] remote_addr`: remote bluetooth device address
- `[in] index`: the index of current call
- `[in] dir`: call direction (incoming/outgoing)
- `[in] current_call_state`: current call state
- `[in] mode`: current call mode (voice/data/fax)
- `[in] mpty`: single or multi type
- `[in] number`: current call number
- `[in] type`: international type or unknow

esp_err_t **esp_bt_hf_cnum_response**(*esp_bd_addr_t remote_addr*, char **number*, *esp_hf_subscriber_service_type_t type*)

Response for AT+CNUM command from HF Client. As a precondition to use this API, Service Level Connection shall exist with HFP client.

Return

- ESP_OK: disconnect request is sent to lower layer
- ESP_INVALID_STATE: if bluetooth stack is not yet enabled
- ESP_FAIL: others

Parameters

- `[in] remote_addr`: remote bluetooth device address
- `[in] number`: registration number
- `[in] type`: service type (unknown/voice/fax)

esp_err_t **esp_bt_hf_bsir**(*esp_bd_addr_t remote_addr*, *esp_hf_in_band_ring_state_t state*)

Inform HF Client that AG Provided in-band ring tone or not. As a precondition to use this API, Service Level Connection shall exist with HFP client.

Return

- ESP_OK: disconnect request is sent to lower layer
- ESP_INVALID_STATE: if bluetooth stack is not yet enabled
- ESP_FAIL: others

Parameters

- `[in] remote_addr`: remote bluetooth device address
- `[in] state`: in-band ring tone state

esp_err_t **esp_bt_hf_answer_call**(*esp_bd_addr_t remote_addr*, int *num_active*, int *num_held*, *esp_hf_call_status_t call_state*, *esp_hf_call_setup_status_t call_setup_state*, char **number*, *esp_hf_call_addr_type_t call_addr_type*)

Answer Incoming Call from AG. As a precondition to use this API, Service Level Connection shall exist with

HFP client.

Return

- ESP_OK: disconnect request is sent to lower layer
- ESP_INVALID_STATE: if bluetooth stack is not yet enabled
- ESP_FAIL: others

Parameters

- `[in] remote_addr`: remote bluetooth device address
- `[in] num_active`: the number of active call
- `[in] num_held`: the number of held call
- `[in] call_state`: call state
- `[in] call_setup_state`: call setup state
- `[in] number`: number of the incoming call
- `[in] call_addr_type`: call address type

esp_err_t **esp_bt_hf_reject_call**(*esp_bd_addr_t remote_addr*, int *num_active*, int *num_held*, *esp_hf_call_status_t call_state*, *esp_hf_call_setup_status_t call_setup_state*, char **number*, *esp_hf_call_addr_type_t call_addr_type*)

Reject Incoming Call from AG. As a precondition to use this API, Service Level Connection shall exist with HFP client.

Return

- ESP_OK: disconnect request is sent to lower layer
- ESP_INVALID_STATE: if bluetooth stack is not yet enabled
- ESP_FAIL: others

Parameters

- `[in] remote_addr`: remote bluetooth device address
- `[in] num_active`: the number of active call
- `[in] num_held`: the number of held call
- `[in] call_state`: call state
- `[in] call_setup_state`: call setup state
- `[in] number`: number of the incoming call
- `[in] call_addr_type`: call address type

esp_err_t **esp_bt_hf_out_call**(*esp_bd_addr_t remote_addr*, int *num_active*, int *num_held*, *esp_hf_call_status_t call_state*, *esp_hf_call_setup_status_t call_setup_state*, char **number*, *esp_hf_call_addr_type_t call_addr_type*)

Initiate a call from AG. As a precondition to use this API, Service Level Connection shall exist with HFP client.

Return

- ESP_OK: disconnect request is sent to lower layer
- ESP_INVALID_STATE: if bluetooth stack is not yet enabled
- ESP_FAIL: others

Parameters

- `[in] remote_addr`: remote bluetooth device address
- `[in] num_active`: the number of active call
- `[in] num_held`: the number of held call
- `[in] call_state`: call state
- `[in] call_setup_state`: call setup state
- `[in] number`: number of the outgoing call
- `[in] call_addr_type`: call address type

esp_err_t **esp_bt_hf_end_call**(*esp_bd_addr_t remote_addr*, int *num_active*, int *num_held*, *esp_hf_call_status_t call_state*, *esp_hf_call_setup_status_t call_setup_state*, char **number*, *esp_hf_call_addr_type_t call_addr_type*)

End an ongoing call. As a precondition to use this API, Service Level Connection shall exist with HFP client.

Return

- ESP_OK: disconnect request is sent to lower layer

- ESP_INVALID_STATE: if bluetooth stack is not yet enabled
- ESP_FAIL: others

Parameters

- `[in] remote_addr`: remote bluetooth device address
- `[in] num_active`: the number of active call
- `[in] num_held`: the number of held call
- `[in] call_state`: call state
- `[in] call_setup_state`: call setup state
- `[in] number`: number of the call
- `[in] call_addr_type`: call address type

esp_err_t **esp_bt_hf_register_data_callback**(*esp_hf_incoming_data_cb_t recv*, *esp_hf_outgoing_data_cb_t send*)

Register AG data output function. The callback is only used in the case that Voice Over HCI is enabled.

Return

- ESP_OK: success
- ESP_INVALID_STATE: if bluetooth stack is not yet enabled
- ESP_FAIL: if callback is a NULL function pointer

Parameters

- `[in] recv`: HFP client incoming data callback function
- `[in] send`: HFP client outgoing data callback function

void **esp_hf_outgoing_data_ready**(void)

Trigger the lower-layer to fetch and send audio data.

This function is only used in the case that Voice Over HCI is enabled. As a precondition to use this API, Service Level Connection shall exist with HFP client. After this function is called, lower layer will invoke esp_hf_client_outgoing_data_cb_t to fetch data

Unions

union esp_hf_cb_param_t

#include <esp_hf_ag_api.h> HFP AG callback parameters.

Public Members

struct *esp_hf_cb_param_t*::*hf_conn_stat_param* **conn_stat**

AG callback param of ESP_HF_CONNECTION_STATE_EVT

struct *esp_hf_cb_param_t*::*hf_audio_stat_param* **audio_stat**

AG callback param of ESP_HF_AUDIO_STATE_EVT

struct *esp_hf_cb_param_t*::*hf_vra_rep_param* **vra_rep**

AG callback param of ESP_HF_BVRA_RESPONSE_EVT

struct *esp_hf_cb_param_t*::*hf_volume_control_param* **volume_control**

AG callback param of ESP_HF_VOLUME_CONTROL_EVT

struct *esp_hf_cb_param_t*::*hf_unat_rep_param* **unat_rep**

AG callback param of ESP_HF_UNAT_RESPONSE_EVT

struct *esp_hf_cb_param_t*::*hf_cind_param* **cind**

AG callback param of ESP_HF_CIND_RESPONSE_EVT

struct *esp_hf_cb_param_t*::*hf_out_call_param* **out_call**

AG callback param of ESP_HF_DIAL_EVT

struct *esp_hf_cb_param_t*::*hf_vts_rep_param* **vts_rep**

AG callback param of ESP_HF_VTS_RESPONSE_EVT

struct *esp_hf_cb_param_t*::*hf_nrec_param* **nrec**

AG callback param of ESP_HF_NREC_RESPONSE_EVT

struct *esp_hf_cb_param_t*::*hf_wbs_rep_param* **wbs_rep**
AG callback param of ESP_HF_WBS_RESPONSE_EVT

struct *esp_hf_cb_param_t*::*hf_bcs_rep_param* **bcs_rep**
AG callback param of ESP_HF_BCS_RESPONSE_EVT

struct hf_audio_stat_param
#include <*esp_hf_ag_api.h*> ESP_HF_AUDIO_STATE_EVT.

Public Members

esp_bd_addr_t **remote_addr**
Remote bluetooth device address

esp_hf_audio_state_t **state**
Audio connection state

struct hf_bcs_rep_param
#include <*esp_hf_ag_api.h*> ESP_HF_BCS_RESPONSE_EVT.

Public Members

esp_hf_wbs_config_t **mode**
codec mode CVSD or mSBC

struct hf_cind_param
#include <*esp_hf_ag_api.h*> ESP_HF_CIND_RESPONSE_EVT.

Public Members

esp_hf_call_status_t **call_status**
call status indicator

esp_hf_call_setup_status_t **call_setup_status**
call setup status indicator

esp_hf_network_state_t **svc**
bluetooth proprietary call hold status indicator

int **signal_strength**
bluetooth proprietary call hold status indicator

esp_hf_roaming_status_t **roam**
bluetooth proprietary call hold status indicator

int **battery_level**
battery charge value, ranges from 0 to 5

esp_hf_call_held_status_t **call_held_status**
bluetooth proprietary call hold status indicator

struct hf_conn_stat_param
#include <*esp_hf_ag_api.h*> ESP_HS_CONNECTION_STATE_EVT.

Public Members

esp_bd_addr_t **remote_bda**
Remote bluetooth device address

esp_hf_connection_state_t **state**
Connection state

uint32_t **peer_feat**
HF supported features

uint32_t **chld_feat**
AG supported features on call hold and multiparty services

struct hf_nrec_param
#include <esp_hf_ag_api.h> ESP_HF_NREC_RESPOSNE_EVT.

Public Members

esp_hf_nrec_t **state**
NREC enabled or disabled

struct hf_out_call_param
#include <esp_hf_ag_api.h> ESP_HF_DIAL_EVT.

Public Members

esp_bd_addr_t **remote_addr**
remote bluetooth device address

char ***num_or_loc**
location in phone memory

struct hf_unat_rep_param
#include <esp_hf_ag_api.h> ESP_HF_UNAT_RESPOSNE_EVT.

Public Members

char ***unat**
Unknown AT command string

struct hf_volume_control_param
#include <esp_hf_ag_api.h> ESP_HF_VOLUME_CONTROL_EVT.

Public Members

esp_hf_volume_type_t **type**
Volume control target, speaker or microphone

int **volume**
Gain, ranges from 0 to 15

struct hf_vra_rep_param
#include <esp_hf_ag_api.h> ESP_HF_BVRA_RESPONSE_EVT.

Public Members

esp_bd_addr_t **remote_addr**
Remote bluetooth device address

esp_hf_vr_state_t **value**
Voice recognition state

struct hf_vts_rep_param
#include <esp_hf_ag_api.h> ESP_HF_VTS_RESPOSNE_EVT.

Public Members

char *code
MTF code from HF Client

struct hf_wbs_rep_param

#include <esp_hf_ag_api.h> ESP_HF_WBS_RESPONSE_EVT.

Public Members

esp_hf_wbs_config_t codec
codec mode CVSD or mSBC

Macros

ESP_HF_PEER_FEAT_3WAY
ESP_HF_PEER_FEAT_ECNR
ESP_HF_PEER_FEAT_VREC
ESP_HF_PEER_FEAT_INBAND
ESP_HF_PEER_FEAT_VTAG
ESP_HF_PEER_FEAT_REJECT
ESP_HF_PEER_FEAT_ECS
ESP_HF_PEER_FEAT_ECC
ESP_HF_PEER_FEAT_EXTERR
ESP_HF_PEER_FEAT_CODEC
ESP_HF_PEER_FEAT_HF_IND
ESP_HF_PEER_FEAT_ESCO_S4
ESP_HF_CHLD_FEAT_REL
ESP_HF_CHLD_FEAT_REL_ACC
ESP_HF_CHLD_FEAT_REL_X
ESP_HF_CHLD_FEAT_HOLD_ACC
ESP_HF_CHLD_FEAT_PRIV_X
ESP_HF_CHLD_FEAT_MERGE
ESP_HF_CHLD_FEAT_MERGE_DETACH

Type Definitions

typedef void (*esp_hf_incoming_data_cb_t)(const uint8_t *buf, uint32_t len)
AG incoming data callback function, the callback is useful in case of Voice Over HCI.

Parameters

- [in] buf: : pointer to incoming data(payload of HCI synchronous data packet), the buffer is allocated inside bluetooth protocol stack and will be released after invoke of the callback is finished.
- [in] len: : size(in bytes) in buf

typedef uint32_t (*esp_hf_outgoing_data_cb_t)(uint8_t *buf, uint32_t len)
AG outgoing data callback function, the callback is useful in case of Voice Over HCI. Once audio connection is set up and the application layer has prepared data to send, the lower layer will call this function to read data and then send. This callback is supposed to be implemented as non-blocking, and if data is not enough, return value 0 is supposed.

Return length of data successfully read

Parameters

- `[in] buf`: : pointer to incoming data(payload of HCI synchronous data packet), the buffer is allocated inside bluetooth protocol stack and will be released after invoke of the callback is finished.
- `[in] len`: : size(in bytes) in buf

typedef void (***esp_hf_cb_t**) (*esp_hf_cb_event_t* event, *esp_hf_cb_param_t* *param)

HF AG callback function type.

Parameters

- `event`: : Event type
- `param`: : Pointer to callback parameter

Enumerations

enum esp_hf_cb_event_t

HF callback events.

Values:

ESP_HF_CONNECTION_STATE_EVT = 0

Connection state changed event

ESP_HF_AUDIO_STATE_EVT

Audio connection state change event

ESP_HF_BVRA_RESPONSE_EVT

Voice recognition state change event

ESP_HF_VOLUME_CONTROL_EVT

Audio volume control command from HF Client, provided by +VGM or +VGS message

ESP_HF_UNAT_RESPONSE_EVT

Unknown AT cmd Response

ESP_HF_IND_UPDATE_EVT

Indicator Update Event

ESP_HF_CIND_RESPONSE_EVT

Call And Device Indicator Response

ESP_HF_COPS_RESPONSE_EVT

Current operator information

ESP_HF_CLCC_RESPONSE_EVT

List of current calls notification

ESP_HF_CNUM_RESPONSE_EVT

Subscriber information response from HF Client

ESP_HF_VTS_RESPONSE_EVT

Enable or not DTMF

ESP_HF_NREC_RESPONSE_EVT

Enable or not NREC

ESP_HF_ATA_RESPONSE_EVT

Answer an Incoming Call

ESP_HF_CHUP_RESPONSE_EVT

Reject an Incoming Call

ESP_HF_DIAL_EVT

Origin an outgoing call with specific number or the dial the last number

ESP_HF_WBS_RESPONSE_EVT

Codec Status

ESP_HF_BCS_RESPONSE_EVT
Final Codec Choice

2.1.5 NimBLE-based host APIs

Overview

Apache MyNewt NimBLE is a highly configurable and BT SIG qualifiable BLE stack providing both host and controller functionalities. ESP-IDF supports NimBLE host stack which is specifically ported for ESP32 platform and FreeRTOS. The underlying controller is still the same (as in case of Bluedroid) providing VHCI interface. Refer to NimBLE user guide for a complete list of features and additional information on NimBLE stack. Most features of NimBLE including BLE Mesh are supported by ESP-IDF. The porting layer is kept cleaner by maintaining all the existing APIs of NimBLE along with a single ESP-NimBLE API for initialization, making it simpler for the application developers.

Architecture

Currently, NimBLE host and controller support different transports such as UART and RAM between them. However, RAM transport cannot be used as is in case of ESP as ESP controller supports VHCI interface and buffering schemes used by NimBLE host is incompatible with that used by ESP controller. Therefore, a new transport between NimBLE host and ESP controller has been added. This is depicted in the figure below. This layer is responsible for maintaining pool of transport buffers and formatting buffers exchanges between host and controller as per the requirements.

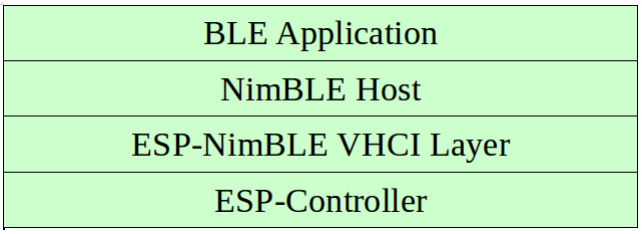

图 1: ESP NimBLE Stack

Threading Model

The NimBLE host can run inside the application thread or can have its own independent thread. This flexibility is inherently provided by NimBLE design. By default, a thread is spawned by the porting function `nimble_port_freertos_init`. This behavior can be changed by overriding the same function. For BLE Mesh, additional thread (advertising thread) is used which keeps on feeding advertisement events to the main thread.

Programming Sequence

To begin with, make sure that the NimBLE stack is enabled from menuconfig *choose NimBLE for the Bluetooth host*.

Typical programming sequence with NimBLE stack consists of the following steps:

- Initialize NVS flash using *`nvs_flash_init()`* API. This is because ESP controller uses NVS during initialization.
- Call *`esp_nimble_hci_and_controller_init()`* to initialize ESP controller as well as transport layer. This will also link the host and controller modules together. Alternatively, if ESP controller is already initialized, then *`esp_nimble_hci_init()`* can be called for the remaining initialization.
- Initialize the host stack using `nimble_port_init`.
- Initialize the required NimBLE host configuration parameters and callbacks
- Perform application specific tasks/initialization
- Run the thread for host stack using `nimble_port_freertos_init`

This documentation does not cover NimBLE APIs. Refer to NimBLE tutorial for more details on the programming sequence/NimBLE APIs for different scenarios.

API Reference

Header File

- bt/host/nimble/esp-hci/include/esp_nimble_hci.h

Functions

esp_err_t **esp_nimble_hci_init** (void)

Initialize VHCI transport layer between NimBLE Host and ESP Bluetooth controller.

This function initializes the transport buffers to be exchanged between NimBLE host and ESP controller. It also registers required host callbacks with the controller.

Return

- ESP_OK if the initialization is successful
- Appropriate error code from esp_err_t in case of an error

esp_err_t **esp_nimble_hci_and_controller_init** (void)

Initialize ESP Bluetooth controller(link layer) and VHCI transport layer between NimBLE Host and ESP Bluetooth controller.

This function initializes ESP controller in BLE only mode and the transport buffers to be exchanged between NimBLE host and ESP controller. It also registers required host callbacks with the controller.

Below is the sequence of APIs to be called to init/enable NimBLE host and ESP controller:

```
void ble_host_task(void *param)
{
     nimble_port_run(); //This function will return only when nimble_port_
↪stop() is executed.
     nimble_port_freertos_deinit();
}

int ret = esp_nimble_hci_and_controller_init();
if (ret != ESP_OK) {
     ESP_LOGE(TAG, "esp_nimble_hci_and_controller_init() failed with error: %d
↪", ret);
     return;
}

nimble_port_init();

//Initialize the NimBLE Host configuration

nimble_port_freertos_init(ble_host_task);
```

nimble_port_freertos_init() is an optional call that creates a new task in which the NimBLE host will run. The task function should have a call to nimble_port_run(). If a separate task is not required, calling nimble_port_run() will run the NimBLE host in the current task.

Return

- ESP_OK if the initialization is successful
- Appropriate error code from esp_err_t in case of an error

esp_err_t **esp_nimble_hci_deinit** (void)

Deinitialize VHCI transport layer between NimBLE Host and ESP Bluetooth controller.

Note This function should be called after the NimBLE host is deinitialized.

Return

- ESP_OK if the deinitialization is successful

- Appropriate error codes from esp_err_t in case of an error

esp_err_t **esp_nimble_hci_and_controller_deinit**(void)

Deinitialize VHCI transport layer between NimBLE Host and ESP Bluetooth controller and disable and deinitialize the controller.

Below is the sequence of APIs to be called to disable/deinit NimBLE host and ESP controller:

Note This function should not be executed in the context of Bluetooth host task.
Note This function should be called after the NimBLE host is deinitialized.

```
int ret = nimble_port_stop();
if (ret == 0) {
     nimble_port_deinit();

     ret = esp_nimble_hci_and_controller_deinit();
     if (ret != ESP_OK) {
         ESP_LOGE(TAG, "esp_nimble_hci_and_controller_deinit() failed with␣
↪error: %d", ret);
     }
}
```

If nimble_port_freertos_init() is used during initialization, then nimble_port_freertos_deinit() should be called in the host task after nimble_port_run().

Return

- ESP_OK if the deinitialization is successful
- Appropriate error codes from esp_err_t in case of an error

Macros

BLE_HCI_UART_H4_NONE
BLE_HCI_UART_H4_CMD
BLE_HCI_UART_H4_ACL
BLE_HCI_UART_H4_SCO
BLE_HCI_UART_H4_EVT

2.1.6 ESP-BLE-MESH

With various features of ESP-BLE-MESH, users can create a managed flooding mesh network for several scenarios, such as lighting, sensor and etc.

For an ESP32 to join and work on a ESP-BLE-MESH network, it must be provisioned firstly. By provisioning, the ESP32, as an unprovisioned device, will join the ESP-BLE-MESH network and become a ESP-BLE-MESH node, communicating with other nodes within or beyond the radio range.

Apart from ESP-BLE-MESH nodes, inside ESP-BLE-MESH network, there is also ESP32 that works as ESP-BLE-MESH Provisioner, which could provision unprovisioned devices into ESP-BLE-MESH nodes and configure the nodes with various features.

For information how to start using ESP32 and ESP-BLE-MESH, please see the Section *ESP-BLE-MESH 快速入门*. If you are interested in information on ESP-BLE-MESH architecture, including some details of software implementation, please see Section *ESP-BLE-MESH 架构*.

Application Examples and Demos

Please refer to Sections *ESP-BLE-MESH 示例* and *ESP-BLE-MESH 演示视频*.

API Reference

ESP-BLE-MESH APIs are divided into the following parts:

- *ESP-BLE-MESH Definitions*
- *ESP-BLE-MESH Core API Reference*
- *ESP-BLE-MESH Models API Reference*

ESP-BLE-MESH Definitions

This section contains only one header file, which lists the following items of ESP-BLE-MESH.

- ID of all the models and related message opcodes
- Structs of model, element and Composition Data
- Structs of used by ESP-BLE-MESH Node/Provisioner for provisioning
- Structs used to transmit/receive messages
- Event types and related event parameters

Header File

- bt/esp_ble_mesh/api/esp_ble_mesh_defs.h

Unions

union esp_ble_mesh_prov_cb_param_t

#include <esp_ble_mesh_defs.h> BLE Mesh Node/Provisioner callback parameters union.

Public Members

struct *esp_ble_mesh_prov_cb_param_t*::*ble_mesh_prov_register_comp_param* **prov_register_comp**

Event parameter of ESP_BLE_MESH_PROV_REGISTER_COMP_EVT

struct *esp_ble_mesh_prov_cb_param_t*::*ble_mesh_set_unprov_dev_name_comp_param* **node_set_unprov_dev_name**

Event parameter of ESP_BLE_MESH_NODE_SET_UNPROV_DEV_NAME_COMP_EVT

struct *esp_ble_mesh_prov_cb_param_t*::*ble_mesh_prov_enable_comp_param* **node_prov_enable_comp**

Event parameter of ESP_BLE_MESH_NODE_PROV_ENABLE_COMP_EVT

struct *esp_ble_mesh_prov_cb_param_t*::*ble_mesh_prov_disable_comp_param* **node_prov_disable_comp**

Event parameter of ESP_BLE_MESH_NODE_PROV_DISABLE_COMP_EVT

struct *esp_ble_mesh_prov_cb_param_t*::*ble_mesh_link_open_evt_param* **node_prov_link_open**

Event parameter of ESP_BLE_MESH_NODE_PROV_LINK_OPEN_EVT

struct *esp_ble_mesh_prov_cb_param_t*::*ble_mesh_link_close_evt_param* **node_prov_link_close**

Event parameter of ESP_BLE_MESH_NODE_PROV_LINK_CLOSE_EVT

struct *esp_ble_mesh_prov_cb_param_t*::*ble_mesh_output_num_evt_param* **node_prov_output_num**

Event parameter of ESP_BLE_MESH_NODE_PROV_OUTPUT_NUMBER_EVT

struct *esp_ble_mesh_prov_cb_param_t*::*ble_mesh_output_str_evt_param* **node_prov_output_str**

Event parameter of ESP_BLE_MESH_NODE_PROV_OUTPUT_STRING_EVT

struct *esp_ble_mesh_prov_cb_param_t*::*ble_mesh_input_evt_param* **node_prov_input**

Event parameter of ESP_BLE_MESH_NODE_PROV_INPUT_EVT

struct *esp_ble_mesh_prov_cb_param_t*::*ble_mesh_provision_complete_evt_param* **node_prov_complete**

Event parameter of ESP_BLE_MESH_NODE_PROV_COMPLETE_EVT

struct *esp_ble_mesh_prov_cb_param_t*::*ble_mesh_provision_reset_param* **node_prov_reset**

Event parameter of ESP_BLE_MESH_NODE_PROV_RESET_EVT

struct *esp_ble_mesh_prov_cb_param_t*::*ble_mesh_set_oob_pub_key_comp_param* **node_prov_set_oob_pub_key_c**
Event parameter of ESP_BLE_MESH_NODE_PROV_SET_OOB_PUB_KEY_COMP_EVT

struct *esp_ble_mesh_prov_cb_param_t*::*ble_mesh_input_number_comp_param* **node_prov_input_num_comp**
Event parameter of ESP_BLE_MESH_NODE_PROV_INPUT_NUM_COMP_EVT

struct *esp_ble_mesh_prov_cb_param_t*::*ble_mesh_input_string_comp_param* **node_prov_input_str_comp**
Event parameter of ESP_BLE_MESH_NODE_PROV_INPUT_STR_COMP_EVT

struct *esp_ble_mesh_prov_cb_param_t*::*ble_mesh_proxy_identity_enable_comp_param* **node_proxy_identity_enab**
Event parameter of ESP_BLE_MESH_NODE_PROXY_IDENTITY_ENABLE_COMP_EVT

struct *esp_ble_mesh_prov_cb_param_t*::*ble_mesh_proxy_gatt_enable_comp_param* **node_proxy_gatt_enable_comp**
Event parameter of ESP_BLE_MESH_NODE_PROXY_GATT_ENABLE_COMP_EVT

struct *esp_ble_mesh_prov_cb_param_t*::*ble_mesh_proxy_gatt_disable_comp_param* **node_proxy_gatt_disable_co**
Event parameter of ESP_BLE_MESH_NODE_PROXY_GATT_DISABLE_COMP_EVT

struct *esp_ble_mesh_prov_cb_param_t*::*ble_mesh_node_add_local_net_key_comp_param* **node_add_net_key_comp**
Event parameter of ESP_BLE_MESH_NODE_ADD_LOCAL_NET_KEY_COMP_EVT

struct *esp_ble_mesh_prov_cb_param_t*::*ble_mesh_node_add_local_app_key_comp_param* **node_add_app_key_comp**
Event parameter of ESP_BLE_MESH_NODE_ADD_LOCAL_APP_KEY_COMP_EVT

struct *esp_ble_mesh_prov_cb_param_t*::*ble_mesh_node_bind_local_mod_app_comp_param* **node_bind_app_key_to_**
Event parameter of ESP_BLE_MESH_NODE_BIND_APP_KEY_TO_MODEL_COMP_EVT

struct *esp_ble_mesh_prov_cb_param_t*::*ble_mesh_provisioner_recv_unprov_adv_pkt_param* **provisioner_recv_unpr**
Event parameter of ESP_BLE_MESH_PROVISIONER_RECV_UNPROV_ADV_PKT_EVT

struct *esp_ble_mesh_prov_cb_param_t*::*ble_mesh_provisioner_prov_enable_comp_param* **provisioner_prov_enable**
Event parameter of ESP_BLE_MESH_PROVISIONER_PROV_ENABLE_COMP_EVT

struct *esp_ble_mesh_prov_cb_param_t*::*ble_mesh_provisioner_prov_disable_comp_param* **provisioner_prov_disab**
Event parameter of ESP_BLE_MESH_PROVISIONER_PROV_DISABLE_COMP_EVT

struct *esp_ble_mesh_prov_cb_param_t*::*ble_mesh_provisioner_link_open_evt_param* **provisioner_prov_link_oper**
Event parameter of ESP_BLE_MESH_PROVISIONER_PROV_LINK_OPEN_EVT

struct *esp_ble_mesh_prov_cb_param_t*::*ble_mesh_provisioner_prov_read_oob_pub_key_evt_param* **provisioner_prov**
Event parameter of ESP_BLE_MESH_PROVISIONER_PROV_READ_OOB_PUB_KEY_EVT

struct *esp_ble_mesh_prov_cb_param_t*::*ble_mesh_provisioner_prov_input_evt_param* **provisioner_prov_input**
Event parameter of ESP_BLE_MESH_PROVISIONER_PROV_INPUT_EVT

struct *esp_ble_mesh_prov_cb_param_t*::*ble_mesh_provisioner_prov_output_evt_param* **provisioner_prov_output**
Event parameter of ESP_BLE_MESH_PROVISIONER_PROV_OUTPUT_EVT

struct *esp_ble_mesh_prov_cb_param_t*::*ble_mesh_provisioner_link_close_evt_param* **provisioner_prov_link_clos**
Event parameter of ESP_BLE_MESH_PROVISIONER_PROV_LINK_CLOSE_EVT

struct *esp_ble_mesh_prov_cb_param_t*::*ble_mesh_provisioner_prov_comp_param* **provisioner_prov_complete**
Event parameter of ESP_BLE_MESH_PROVISIONER_PROV_COMPLETE_EVT

struct *esp_ble_mesh_prov_cb_param_t*::*ble_mesh_provisioner_add_unprov_dev_comp_param* **provisioner_add_unpr**
Event parameter of ESP_BLE_MESH_PROVISIONER_ADD_UNPROV_DEV_COMP_EVT

struct *esp_ble_mesh_prov_cb_param_t*::*ble_mesh_provisioner_prov_dev_with_addr_comp_param* **provisioner_prov_**
Event parameter of ESP_BLE_MESH_PROVISIONER_PROV_DEV_WITH_ADDR_COMP_EVT

struct *esp_ble_mesh_prov_cb_param_t*::*ble_mesh_provisioner_delete_dev_comp_param* **provisioner_delete_dev_c**
Event parameter of ESP_BLE_MESH_PROVISIONER_DELETE_DEV_COMP_EVT

struct *esp_ble_mesh_prov_cb_param_t*::*ble_mesh_provisioner_set_dev_uuid_match_comp_param* **provisioner_set_d**
Event parameter of ESP_BLE_MESH_PROVISIONER_SET_DEV_UUID_MATCH_COMP_EVT

struct *esp_ble_mesh_prov_cb_param_t*::*ble_mesh_provisioner_set_prov_data_info_comp_param* **provisioner_set_pr**
Event parameter of ESP_BLE_MESH_PROVISIONER_SET_PROV_DATA_INFO_COMP_EVT

struct *esp_ble_mesh_prov_cb_param_t*::*ble_mesh_provisioner_set_static_oob_val_comp_param* **provisioner_set_sta**
Event parameter of ESP_BLE_MESH_PROVISIONER_SET_STATIC_OOB_VALUE_COMP_EVT

struct *esp_ble_mesh_prov_cb_param_t*::*ble_mesh_provisioner_set_primary_elem_addr_comp_param* **provisioner_set**
Event parameter of ESP_BLE_MESH_PROVISIONER_SET_PRIMARY_ELEM_ADDR_COMP_EVT

struct *esp_ble_mesh_prov_cb_param_t*::*ble_mesh_provisioner_prov_read_oob_pub_key_comp_param* **provisioner_pr**
Event parameter of ESP_BLE_MESH_PROVISIONER_PROV_READ_OOB_PUB_KEY_COMP_EVT

struct *esp_ble_mesh_prov_cb_param_t*::*ble_mesh_provisioner_prov_input_num_comp_param* **provisioner_prov_inp**
Event parameter of ESP_BLE_MESH_PROVISIONER_PROV_INPUT_NUMBER_COMP_EVT

struct *esp_ble_mesh_prov_cb_param_t*::*ble_mesh_provisioner_prov_input_str_comp_param* **provisioner_prov_inpu**
Event parameter of ESP_BLE_MESH_PROVISIONER_PROV_INPUT_STRING_COMP_EVT

struct *esp_ble_mesh_prov_cb_param_t*::*ble_mesh_provisioner_set_node_name_comp_param* **provisioner_set_node_**
Event parameter of ESP_BLE_MESH_PROVISIONER_SET_NODE_NAME_COMP_EVT

struct *esp_ble_mesh_prov_cb_param_t*::*ble_mesh_provisioner_add_local_app_key_comp_param* **provisioner_add_ap**
Event parameter of ESP_BLE_MESH_PROVISIONER_ADD_LOCAL_APP_KEY_COMP_EVT

struct *esp_ble_mesh_prov_cb_param_t*::*ble_mesh_provisioner_update_local_app_key_comp_param* **provisioner_upda**
Event parameter of ESP_BLE_MESH_PROVISIONER_UPDATE_LOCAL_APP_KEY_COMP_EVT

struct *esp_ble_mesh_prov_cb_param_t*::*ble_mesh_provisioner_bind_local_mod_app_comp_param* **provisioner_bind_**
Event parameter of ESP_BLE_MESH_PROVISIONER_BIND_APP_KEY_TO_MODEL_COMP_EVT

struct *esp_ble_mesh_prov_cb_param_t*::*ble_mesh_provisioner_add_local_net_key_comp_param* **provisioner_add_ne**
Event parameter of ESP_BLE_MESH_PROVISIONER_ADD_LOCAL_NET_KEY_COMP_EVT

struct *esp_ble_mesh_prov_cb_param_t*::*ble_mesh_provisioner_update_local_net_key_comp_param* **provisioner_updat**
Event parameter of ESP_BLE_MESH_PROVISIONER_UPDATE_LOCAL_NET_KEY_COMP_EVT

struct *esp_ble_mesh_prov_cb_param_t*::*ble_mesh_provisioner_store_node_comp_data_comp_param* **provisioner_sto**
Event parameter of ESP_BLE_MESH_PROVISIONER_STORE_NODE_COMP_DATA_COMP_EVT

struct *esp_ble_mesh_prov_cb_param_t*::*ble_mesh_provisioner_delete_node_with_uuid_comp_param* **provisioner_dele**
Event parameter of ESP_BLE_MESH_PROVISIONER_DELETE_NODE_WITH_UUID_COMP_EVT

struct *esp_ble_mesh_prov_cb_param_t*::*ble_mesh_provisioner_delete_node_with_addr_comp_param* **provisioner_del**
Event parameter of ESP_BLE_MESH_PROVISIONER_DELETE_NODE_WITH_ADDR_COMP_EVT

int **err_code**
Indicate the result of enabling/disabling to receive heartbeat messages by the Provisioner

Indicate the result of setting the heartbeat filter type by the Provisioner

Indicate the result of setting the heartbeat filter address by the Provisioner

Indicate the result of directly erasing settings by the Provisioner

Indicate the result of opening settings with index by the Provisioner

Indicate the result of opening settings with user id by the Provisioner

Indicate the result of closing settings with index by the Provisioner

Indicate the result of closing settings with user id by the Provisioner

Indicate the result of deleting settings with index by the Provisioner

Indicate the result of deleting settings with user id by the Provisioner

bool **enable**
Indicate enabling or disabling receiving heartbeat messages

struct *esp_ble_mesh_prov_cb_param_t*::**[anonymous]** **provisioner_enable_heartbeat_recv_comp**
ESP_BLE_MESH_PROVISIONER_ENABLE_HEARTBEAT_RECV_COMP_EVT.

Event parameters of ESP_BLE_MESH_PROVISIONER_ENABLE_HEARTBEAT_RECV_COMP_EVT

uint8_t **type**
Type of the filter used for receiving heartbeat messages

struct *esp_ble_mesh_prov_cb_param_t*::**[anonymous] provisioner_set_heartbeat_filter_type_comp**
ESP_BLE_MESH_PROVISIONER_SET_HEARTBEAT_FILTER_TYPE_COMP_EVT.

Event parameters of ESP_BLE_MESH_PROVISIONER_SET_HEARTBEAT_FILTER_TYPE_COMP_EVT

uint8_t **op**
Operation (add, remove, clean)

uint16_t **hb_src**
Heartbeat source address

uint16_t **hb_dst**
Heartbeat destination address

struct *esp_ble_mesh_prov_cb_param_t*::**[anonymous] provisioner_set_heartbeat_filter_info_comp**
ESP_BLE_MESH_PROVISIONER_SET_HEARTBEAT_FILTER_INFO_COMP_EVT.

Event parameters of ESP_BLE_MESH_PROVISIONER_SET_HEARTBEAT_FILTER_INFO_COMP_EVT

uint8_t **init_ttl**
Heartbeat InitTTL

uint8_t **rx_ttl**
Heartbeat RxTTL

uint8_t **hops**
Heartbeat hops (InitTTL - RxTTL + 1)

uint16_t **feature**
Bit field of currently active features of the node

int8_t **rssi**
RSSI of the heartbeat message

struct *esp_ble_mesh_prov_cb_param_t*::**[anonymous] provisioner_recv_heartbeat**
ESP_BLE_MESH_PROVISIONER_RECV_HEARTBEAT_MESSAGE_EVT.

Event parameters of ESP_BLE_MESH_PROVISIONER_RECV_HEARTBEAT_MESSAGE_EVT

struct *esp_ble_mesh_prov_cb_param_t*::**[anonymous] provisioner_direct_erase_settings_comp**
ESP_BLE_MESH_PROVISIONER_DRIECT_ERASE_SETTINGS_COMP_EVT.

Event parameters of ESP_BLE_MESH_PROVISIONER_DRIECT_ERASE_SETTINGS_COMP_EVT

uint8_t **index**
Index of Provisioner settings

struct *esp_ble_mesh_prov_cb_param_t*::**[anonymous] provisioner_open_settings_with_index_comp**
ESP_BLE_MESH_PROVISIONER_OPEN_SETTINGS_WITH_INDEX_COMP_EVT.

Event parameter of ESP_BLE_MESH_PROVISIONER_OPEN_SETTINGS_WITH_INDEX_COMP_EVT

char **uid**[**ESP_BLE_MESH_SETTINGS_UID_SIZE** + 1]
Provisioner settings user id

struct *esp_ble_mesh_prov_cb_param_t*::**[anonymous] provisioner_open_settings_with_uid_comp**
ESP_BLE_MESH_PROVISIONER_OPEN_SETTINGS_WITH_UID_COMP_EVT.

Event parameters of ESP_BLE_MESH_PROVISIONER_OPEN_SETTINGS_WITH_UID_COMP_EVT

struct *esp_ble_mesh_prov_cb_param_t*::**[anonymous] provisioner_close_settings_with_index_comp**
ESP_BLE_MESH_PROVISIONER_CLOSE_SETTINGS_WITH_INDEX_COMP_EVT.

Event parameter of ESP_BLE_MESH_PROVISIONER_CLOSE_SETTINGS_WITH_INDEX_COMP_EVT

struct *esp_ble_mesh_prov_cb_param_t*::**[anonymous] provisioner_close_settings_with_uid_comp**
ESP_BLE_MESH_PROVISIONER_CLOSE_SETTINGS_WITH_UID_COMP_EVT.

Event parameters of ESP_BLE_MESH_PROVISIONER_CLOSE_SETTINGS_WITH_UID_COMP_EVT

struct *esp_ble_mesh_prov_cb_param_t*::**[anonymous] provisioner_delete_settings_with_index_comp**
ESP_BLE_MESH_PROVISIONER_DELETE_SETTINGS_WITH_INDEX_COMP_EVT.

Event parameter of ESP_BLE_MESH_PROVISIONER_DELETE_SETTINGS_WITH_INDEX_COMP_EVT

struct *esp_ble_mesh_prov_cb_param_t*::**[anonymous] provisioner_delete_settings_with_uid_comp**
ESP_BLE_MESH_PROVISIONER_DELETE_SETTINGS_WITH_UID_COMP_EVT.

Event parameters of ESP_BLE_MESH_PROVISIONER_DELETE_SETTINGS_WITH_UID_COMP_EVT

struct *esp_ble_mesh_prov_cb_param_t*::*ble_mesh_set_fast_prov_info_comp_param* **set_fast_prov_info_comp**
Event parameter of ESP_BLE_MESH_SET_FAST_PROV_INFO_COMP_EVT

struct *esp_ble_mesh_prov_cb_param_t*::*ble_mesh_set_fast_prov_action_comp_param* **set_fast_prov_action_comp**
Event parameter of ESP_BLE_MESH_SET_FAST_PROV_ACTION_COMP_EVT

struct *esp_ble_mesh_prov_cb_param_t*::*ble_mesh_heartbeat_msg_recv_param* **heartbeat_msg_recv**
Event parameter of ESP_BLE_MESH_HEARTBEAT_MESSAGE_RECV_EVT

struct *esp_ble_mesh_prov_cb_param_t*::*ble_mesh_lpn_enable_comp_param* **lpn_enable_comp**
Event parameter of ESP_BLE_MESH_LPN_ENABLE_COMP_EVT

struct *esp_ble_mesh_prov_cb_param_t*::*ble_mesh_lpn_disable_comp_param* **lpn_disable_comp**
Event parameter of ESP_BLE_MESH_LPN_DISABLE_COMP_EVT

struct *esp_ble_mesh_prov_cb_param_t*::*ble_mesh_lpn_poll_comp_param* **lpn_poll_comp**
Event parameter of ESP_BLE_MESH_LPN_POLL_COMP_EVT

struct *esp_ble_mesh_prov_cb_param_t*::*ble_mesh_lpn_friendship_establish_param* **lpn_friendship_establish**
Event parameter of ESP_BLE_MESH_LPN_FRIENDSHIP_ESTABLISH_EVT

struct *esp_ble_mesh_prov_cb_param_t*::*ble_mesh_lpn_friendship_terminate_param* **lpn_friendship_terminate**
Event parameter of ESP_BLE_MESH_LPN_FRIENDSHIP_TERMINATE_EVT

struct *esp_ble_mesh_prov_cb_param_t*::*ble_mesh_friend_friendship_establish_param* **frnd_friendship_establish**
Event parameter of ESP_BLE_MESH_FRIEND_FRIENDSHIP_ESTABLISH_EVT

struct *esp_ble_mesh_prov_cb_param_t*::*ble_mesh_friend_friendship_terminate_param* **frnd_friendship_terminate**
Event parameter of ESP_BLE_MESH_FRIEND_FRIENDSHIP_TERMINATE_EVT

struct *esp_ble_mesh_prov_cb_param_t*::*ble_mesh_proxy_client_recv_adv_pkt_param* **proxy_client_recv_adv_pkt**
Event parameter of ESP_BLE_MESH_PROXY_CLIENT_RECV_ADV_PKT_EVT

struct *esp_ble_mesh_prov_cb_param_t*::*ble_mesh_proxy_client_connected_param* **proxy_client_connected**
Event parameter of ESP_BLE_MESH_PROXY_CLIENT_CONNECTED_EVT

struct *esp_ble_mesh_prov_cb_param_t*::*ble_mesh_proxy_client_disconnected_param* **proxy_client_disconnected**
Event parameter of ESP_BLE_MESH_PROXY_CLIENT_DISCONNECTED_EVT

struct *esp_ble_mesh_prov_cb_param_t*::*ble_mesh_proxy_client_recv_filter_status_param* **proxy_client_recv_filte**
Event parameter of ESP_BLE_MESH_PROXY_CLIENT_RECV_FILTER_STATUS_EVT

struct *esp_ble_mesh_prov_cb_param_t*::*ble_mesh_proxy_client_connect_comp_param* **proxy_client_connect_comp**
Event parameter of ESP_BLE_MESH_PROXY_CLIENT_CONNECT_COMP_EVT

struct *esp_ble_mesh_prov_cb_param_t*::*ble_mesh_proxy_client_disconnect_comp_param* **proxy_client_disconnect**
Event parameter of ESP_BLE_MESH_PROXY_CLIENT_DISCONNECT_COMP_EVT

struct *esp_ble_mesh_prov_cb_param_t*::*ble_mesh_proxy_client_set_filter_type_comp_param* **proxy_client_set_filt**
Event parameter of ESP_BLE_MESH_PROXY_CLIENT_SET_FILTER_TYPE_COMP_EVT

struct *esp_ble_mesh_prov_cb_param_t*::*ble_mesh_proxy_client_add_filter_addr_comp_param* **proxy_client_add_fi**
Event parameter of ESP_BLE_MESH_PROXY_CLIENT_ADD_FILTER_ADDR_COMP_EVT

struct *esp_ble_mesh_prov_cb_param_t*::*ble_mesh_proxy_client_remove_filter_addr_comp_param* **proxy_client_remo**
Event parameter of ESP_BLE_MESH_PROXY_CLIENT_REMOVE_FILTER_ADDR_COMP_EVT

struct *esp_ble_mesh_prov_cb_param_t*::*ble_mesh_proxy_server_connected_param* **proxy_server_connected**
Event parameter of ESP_BLE_MESH_PROXY_SERVER_CONNECTED_EVT

struct *esp_ble_mesh_prov_cb_param_t*::*ble_mesh_proxy_server_disconnected_param* **proxy_server_disconnected**
Event parameter of ESP_BLE_MESH_PROXY_SERVER_DISCONNECTED_EVT

struct *esp_ble_mesh_prov_cb_param_t*::*ble_mesh_model_sub_group_addr_comp_param* **model_sub_group_addr_co**
Event parameters of ESP_BLE_MESH_MODEL_SUBSCRIBE_GROUP_ADDR_COMP_EVT

struct *esp_ble_mesh_prov_cb_param_t*::*ble_mesh_model_unsub_group_addr_comp_param* **model_unsub_group_addr**
Event parameters of ESP_BLE_MESH_MODEL_UNSUBSCRIBE_GROUP_ADDR_COMP_EVT

struct *esp_ble_mesh_prov_cb_param_t*::*ble_mesh_deinit_mesh_comp_param* **deinit_mesh_comp**
Event parameter of ESP_BLE_MESH_DEINIT_MESH_COMP_EVT

struct ble_mesh_deinit_mesh_comp_param
#include <esp_ble_mesh_defs.h> ESP_BLE_MESH_DEINIT_MESH_COMP_EVT.

Public Members

int **err_code**
Indicate the result of BLE Mesh deinitialization

struct ble_mesh_friend_friendship_establish_param
#include <esp_ble_mesh_defs.h> ESP_BLE_MESH_FRIEND_FRIENDSHIP_ESTABLISH_EVT.

Public Members

uint16_t **lpn_addr**
Low Power Node unicast address

struct ble_mesh_friend_friendship_terminate_param
#include <esp_ble_mesh_defs.h> ESP_BLE_MESH_FRIEND_FRIENDSHIP_TERMINATE_EVT.

Public Types

enum [anonymous]
This enum value is the reason of friendship termination on the friend node side

Values:

ESP_BLE_MESH_FRND_FRIENDSHIP_TERMINATE_ESTABLISH_FAIL
Friend Offer has been sent, but Friend Offer is not received within 1 second, friendship fails to be established

ESP_BLE_MESH_FRND_FRIENDSHIP_TERMINATE_POLL_TIMEOUT
Friendship is established, PollTimeout timer expires and no Friend Poll/Sub Add/Sub Remove is received

ESP_BLE_MESH_FRND_FRIENDSHIP_TERMINATE_RECV_FRND_REQ
Receive Friend Request from existing Low Power Node

ESP_BLE_MESH_FRND_FRIENDSHIP_TERMINATE_RECV_FRND_CLEAR
Receive Friend Clear from other friend node

ESP_BLE_MESH_FRND_FRIENDSHIP_TERMINATE_DISABLE
Friend feature disabled or corresponding NetKey is deleted

Public Members

uint16_t **lpn_addr**
Low Power Node unicast address

esp_ble_mesh_prov_cb_param_t::*ble_mesh_friend_friendship_terminate_param*::**[anonymous]** **reason**
This enum value is the reason of friendship termination on the friend node side Friendship terminated reason

struct ble_mesh_heartbeat_msg_recv_param
#include <esp_ble_mesh_defs.h> ESP_BLE_MESH_HEARTBEAT_MESSAGE_RECV_EVT.

Public Members

uint8_t **hops**
Heartbeat hops (InitTTL - RxTTL + 1)

uint16_t **feature**
Bit field of currently active features of the node

struct ble_mesh_input_evt_param
#include <esp_ble_mesh_defs.h> ESP_BLE_MESH_NODE_PROV_INPUT_EVT.

Public Members

esp_ble_mesh_input_action_t **action**
Action of Input OOB Authentication

uint8_t **size**
Size of Input OOB Authentication

struct ble_mesh_input_number_comp_param
#include <esp_ble_mesh_defs.h> ESP_BLE_MESH_NODE_PROV_INPUT_NUM_COMP_EVT.

Public Members

int **err_code**
Indicate the result of inputting number

struct ble_mesh_input_string_comp_param
#include <esp_ble_mesh_defs.h> ESP_BLE_MESH_NODE_PROV_INPUT_STR_COMP_EVT.

Public Members

int **err_code**
Indicate the result of inputting string

struct ble_mesh_link_close_evt_param
#include <esp_ble_mesh_defs.h> ESP_BLE_MESH_NODE_PROV_LINK_CLOSE_EVT.

Public Members

esp_ble_mesh_prov_bearer_t **bearer**
Type of the bearer used when device link is closed

struct ble_mesh_link_open_evt_param
#include <esp_ble_mesh_defs.h> ESP_BLE_MESH_NODE_PROV_LINK_OPEN_EVT.

Public Members

esp_ble_mesh_prov_bearer_t **bearer**
Type of the bearer used when device link is open

struct ble_mesh_lpn_disable_comp_param
#include <esp_ble_mesh_defs.h> ESP_BLE_MESH_LPN_DISABLE_COMP_EVT.

Public Members

int **err_code**
Indicate the result of disabling LPN functionality

struct ble_mesh_lpn_enable_comp_param
#include <esp_ble_mesh_defs.h> ESP_BLE_MESH_LPN_ENABLE_COMP_EVT.

Public Members

int **err_code**
Indicate the result of enabling LPN functionality

struct ble_mesh_lpn_friendship_establish_param
#include <esp_ble_mesh_defs.h> ESP_BLE_MESH_LPN_FRIENDSHIP_ESTABLISH_EVT.

Public Members

uint16_t **friend_addr**
Friend Node unicast address

struct ble_mesh_lpn_friendship_terminate_param
#include <esp_ble_mesh_defs.h> ESP_BLE_MESH_LPN_FRIENDSHIP_TERMINATE_EVT.

Public Members

uint16_t **friend_addr**
Friend Node unicast address

struct ble_mesh_lpn_poll_comp_param
#include <esp_ble_mesh_defs.h> ESP_BLE_MESH_LPN_POLL_COMP_EVT.

Public Members

int **err_code**
Indicate the result of sending Friend Poll

struct ble_mesh_model_sub_group_addr_comp_param
#include <esp_ble_mesh_defs.h> ESP_BLE_MESH_MODEL_SUBSCRIBE_GROUP_ADDR_COMP_EVT.

Public Members

int **err_code**
Indicate the result of local model subscribing group address

uint16_t **element_addr**
Element address

uint16_t **company_id**
Company ID

uint16_t **model_id**
Model ID

uint16_t **group_addr**
Group Address

struct ble_mesh_model_unsub_group_addr_comp_param
#include <esp_ble_mesh_defs.h> ESP_BLE_MESH_MODEL_UNSUBSCRIBE_GROUP_ADDR_COMP_EVT.

Public Members

int **err_code**
Indicate the result of local model unsubscribing group address

uint16_t **element_addr**
Element address

uint16_t **company_id**
Company ID

uint16_t **model_id**
Model ID

uint16_t **group_addr**
Group Address

struct ble_mesh_node_add_local_app_key_comp_param
#include <esp_ble_mesh_defs.h> ESP_BLE_MESH_NODE_ADD_LOCAL_APP_KEY_COMP_EVT.

Public Members

int **err_code**
Indicate the result of adding local AppKey by the node

uint16_t **net_idx**
NetKey Index

uint16_t **app_idx**
AppKey Index

struct ble_mesh_node_add_local_net_key_comp_param
#include <esp_ble_mesh_defs.h> ESP_BLE_MESH_NODE_ADD_LOCAL_NET_KEY_COMP_EVT.

Public Members

int **err_code**
Indicate the result of adding local NetKey by the node

uint16_t **net_idx**
NetKey Index

struct ble_mesh_node_bind_local_mod_app_comp_param
#include <esp_ble_mesh_defs.h> ESP_BLE_MESH_NODE_BIND_APP_KEY_TO_MODEL_COMP_EVT.

Public Members

int **err_code**
Indicate the result of binding AppKey with model by the node

uint16_t **element_addr**
Element address

uint16_t **app_idx**
AppKey Index

uint16_t **company_id**
Company ID

uint16_t **model_id**
Model ID

struct ble_mesh_output_num_evt_param
#include <esp_ble_mesh_defs.h> ESP_BLE_MESH_NODE_PROV_OUTPUT_NUMBER_EVT.

Public Members

esp_ble_mesh_output_action_t **action**
Action of Output OOB Authentication

uint32_t **number**
Number of Output OOB Authentication

struct ble_mesh_output_str_evt_param
#include <esp_ble_mesh_defs.h> ESP_BLE_MESH_NODE_PROV_OUTPUT_STRING_EVT.

Public Members

char **string**[8]
String of Output OOB Authentication

struct ble_mesh_prov_disable_comp_param
#include <esp_ble_mesh_defs.h> ESP_BLE_MESH_NODE_PROV_DISABLE_COMP_EVT.

Public Members

int **err_code**
Indicate the result of disabling BLE Mesh device

struct ble_mesh_prov_enable_comp_param
#include <esp_ble_mesh_defs.h> ESP_BLE_MESH_NODE_PROV_ENABLE_COMP_EVT.

Public Members

int **err_code**
Indicate the result of enabling BLE Mesh device

struct ble_mesh_prov_register_comp_param
#include <esp_ble_mesh_defs.h> ESP_BLE_MESH_PROV_REGISTER_COMP_EVT.

Public Members

int **err_code**
Indicate the result of BLE Mesh initialization

struct ble_mesh_provision_complete_evt_param
#include <esp_ble_mesh_defs.h> ESP_BLE_MESH_NODE_PROV_COMPLETE_EVT.

Public Members

uint16_t **net_idx**
NetKey Index

uint8_t **net_key**[16]
NetKey

uint16_t **addr**
Primary address

uint8_t **flags**
Flags

uint32_t **iv_index**
IV Index

struct ble_mesh_provision_reset_param
#include <esp_ble_mesh_defs.h> ESP_BLE_MESH_NODE_PROV_RESET_EVT.

struct ble_mesh_provisioner_add_local_app_key_comp_param
#include <esp_ble_mesh_defs.h> ESP_BLE_MESH_PROVISIONER_ADD_LOCAL_APP_KEY_COMP_EVT.

Public Members

int **err_code**
Indicate the result of adding local AppKey by the Provisioner

uint16_t **net_idx**
NetKey Index

uint16_t **app_idx**
AppKey Index

struct ble_mesh_provisioner_add_local_net_key_comp_param
#include <esp_ble_mesh_defs.h> ESP_BLE_MESH_PROVISIONER_ADD_LOCAL_NET_KEY_COMP_EVT.

Public Members

int **err_code**
Indicate the result of adding local NetKey by the Provisioner

uint16_t **net_idx**
NetKey Index

struct ble_mesh_provisioner_add_unprov_dev_comp_param
#include <esp_ble_mesh_defs.h> ESP_BLE_MESH_PROVISIONER_ADD_UNPROV_DEV_COMP_EVT.

Public Members

int **err_code**
Indicate the result of adding device into queue by the Provisioner

struct ble_mesh_provisioner_bind_local_mod_app_comp_param
#include <esp_ble_mesh_defs.h> ESP_BLE_MESH_PROVISIONER_BIND_APP_KEY_TO_MODEL_COMP_EVT.

Public Members

int **err_code**
Indicate the result of binding AppKey with model by the Provisioner

uint16_t **element_addr**
Element address

uint16_t **app_idx**
AppKey Index

uint16_t **company_id**
Company ID

uint16_t **model_id**
Model ID

struct ble_mesh_provisioner_delete_dev_comp_param
#include <esp_ble_mesh_defs.h> ESP_BLE_MESH_PROVISIONER_DELETE_DEV_COMP_EVT.

Public Members

int **err_code**
Indicate the result of deleting device by the Provisioner

struct ble_mesh_provisioner_delete_node_with_addr_comp_param
#include <esp_ble_mesh_defs.h> ESP_BLE_MESH_PROVISIONER_DELETE_NODE_WITH_ADDR_COMP_EVT.

Public Members

int **err_code**
Indicate the result of deleting node with unicast address by the Provisioner

uint16_t **unicast_addr**
Node unicast address

struct ble_mesh_provisioner_delete_node_with_uuid_comp_param
#include <esp_ble_mesh_defs.h> ESP_BLE_MESH_PROVISIONER_DELETE_NODE_WITH_UUID_COMP_EVT.

Public Members

int **err_code**
Indicate the result of deleting node with uuid by the Provisioner

uint8_t **uuid**[16]
Node device uuid

struct ble_mesh_provisioner_link_close_evt_param
#include <esp_ble_mesh_defs.h> ESP_BLE_MESH_PROVISIONER_PROV_LINK_CLOSE_EVT.

Public Members

esp_ble_mesh_prov_bearer_t **bearer**
Type of the bearer used when Provisioner link is closed

uint8_t **reason**
Reason of the closed provisioning link

struct ble_mesh_provisioner_link_open_evt_param
#include <esp_ble_mesh_defs.h> ESP_BLE_MESH_PROVISIONER_PROV_LINK_OPEN_EVT.

Public Members

esp_ble_mesh_prov_bearer_t **bearer**
Type of the bearer used when Provisioner link is opened

struct ble_mesh_provisioner_prov_comp_param
#include <esp_ble_mesh_defs.h> ESP_BLE_MESH_PROVISIONER_PROV_COMPLETE_EVT.

Public Members

uint16_t **node_idx**
Index of the provisioned device

esp_ble_mesh_octet16_t **device_uuid**
Device UUID of the provisioned device

uint16_t **unicast_addr**
Primary address of the provisioned device

uint8_t **element_num**
Element count of the provisioned device

uint16_t **netkey_idx**
NetKey Index of the provisioned device

struct ble_mesh_provisioner_prov_dev_with_addr_comp_param
#include <esp_ble_mesh_defs.h> ESP_BLE_MESH_PROVISIONER_PROV_DEV_WITH_ADDR_COMP_EVT.

Public Members

int **err_code**
Indicate the result of Provisioner starting to provision a device

struct ble_mesh_provisioner_prov_disable_comp_param
#include <esp_ble_mesh_defs.h> ESP_BLE_MESH_PROVISIONER_PROV_DISABLE_COMP_EVT.

Public Members

int **err_code**
Indicate the result of disabling BLE Mesh Provisioner

struct ble_mesh_provisioner_prov_enable_comp_param
#include <esp_ble_mesh_defs.h> ESP_BLE_MESH_PROVISIONER_PROV_ENABLE_COMP_EVT.

Public Members

int **err_code**
Indicate the result of enabling BLE Mesh Provisioner

struct ble_mesh_provisioner_prov_input_evt_param
#include <esp_ble_mesh_defs.h> ESP_BLE_MESH_PROVISIONER_PROV_INPUT_EVT.

Public Members

esp_ble_mesh_oob_method_t **method**
Method of device Output OOB Authentication

esp_ble_mesh_output_action_t **action**
Action of device Output OOB Authentication

uint8_t **size**
Size of device Output OOB Authentication

uint8_t **link_idx**
Index of the provisioning link

struct ble_mesh_provisioner_prov_input_num_comp_param
#include <esp_ble_mesh_defs.h> ESP_BLE_MESH_PROVISIONER_PROV_INPUT_NUMBER_COMP_EVT.

Public Members

int **err_code**
Indicate the result of inputting number by the Provisioner

struct ble_mesh_provisioner_prov_input_str_comp_param
#include <esp_ble_mesh_defs.h> ESP_BLE_MESH_PROVISIONER_PROV_INPUT_STRING_COMP_EVT.

Public Members

int **err_code**
Indicate the result of inputting string by the Provisioner

struct ble_mesh_provisioner_prov_output_evt_param
#include <esp_ble_mesh_defs.h> ESP_BLE_MESH_PROVISIONER_PROV_OUTPUT_EVT.

Public Members

esp_ble_mesh_oob_method_t **method**
Method of device Input OOB Authentication

esp_ble_mesh_input_action_t **action**
Action of device Input OOB Authentication

uint8_t **size**
Size of device Input OOB Authentication

uint8_t **link_idx**
Index of the provisioning link

char **string**[8]
String output by the Provisioner

uint32_t **number**
Number output by the Provisioner

union *esp_ble_mesh_prov_cb_param_t*::*ble_mesh_provisioner_prov_output_evt_param*::**[anonymous] [anonymous]**

struct ble_mesh_provisioner_prov_read_oob_pub_key_comp_param

#include <esp_ble_mesh_defs.h> ESP_BLE_MESH_PROVISIONER_PROV_READ_OOB_PUB_KEY_COMP_EVT.

Public Members

int **err_code**

Indicate the result of setting OOB Public Key by the Provisioner

struct ble_mesh_provisioner_prov_read_oob_pub_key_evt_param

#include <esp_ble_mesh_defs.h> ESP_BLE_MESH_PROVISIONER_PROV_READ_OOB_PUB_KEY_EVT.

Public Members

uint8_t **link_idx**

Index of the provisioning link

struct ble_mesh_provisioner_recv_unprov_adv_pkt_param

#include <esp_ble_mesh_defs.h> ESP_BLE_MESH_PROVISIONER_RECV_UNPROV_ADV_PKT_EVT.

Public Members

uint8_t **dev_uuid**[16]

Device UUID of the unprovisioned device

esp_ble_mesh_bd_addr_t **addr**

Device address of the unprovisioned device

esp_ble_mesh_addr_type_t **addr_type**

Device address type

uint16_t **oob_info**

OOB Info of the unprovisioned device

uint8_t **adv_type**

Avertising type of the unprovisioned device

esp_ble_mesh_prov_bearer_t **bearer**

Bearer of the unprovisioned device

int8_t **rssi**

RSSI of the received advertising packet

struct ble_mesh_provisioner_set_dev_uuid_match_comp_param

#include <esp_ble_mesh_defs.h> ESP_BLE_MESH_PROVISIONER_SET_DEV_UUID_MATCH_COMP_EVT.

Public Members

int **err_code**

Indicate the result of setting Device UUID match value by the Provisioner

struct ble_mesh_provisioner_set_node_name_comp_param

#include <esp_ble_mesh_defs.h> ESP_BLE_MESH_PROVISIONER_SET_NODE_NAME_COMP_EVT.

Public Members

int **err_code**
Indicate the result of setting provisioned device name by the Provisioner

uint16_t **node_index**
Index of the provisioned device

struct ble_mesh_provisioner_set_primary_elem_addr_comp_param
#include <esp_ble_mesh_defs.h> ESP_BLE_MESH_PROVISIONER_SET_PRIMARY_ELEM_ADDR_COMP_EVT.

Public Members

int **err_code**
Indicate the result of setting unicast address of primary element by the Provisioner

struct ble_mesh_provisioner_set_prov_data_info_comp_param
#include <esp_ble_mesh_defs.h> ESP_BLE_MESH_PROVISIONER_SET_PROV_DATA_INFO_COMP_EVT.

Public Members

int **err_code**
Indicate the result of setting provisioning info by the Provisioner

struct ble_mesh_provisioner_set_static_oob_val_comp_param
#include <esp_ble_mesh_defs.h> ESP_BLE_MESH_PROVISIONER_SET_STATIC_OOB_VALUE_COMP_EVT.

Public Members

int **err_code**
Indicate the result of setting static oob value by the Provisioner

struct ble_mesh_provisioner_store_node_comp_data_comp_param
#include <esp_ble_mesh_defs.h> ESP_BLE_MESH_PROVISIONER_STORE_NODE_COMP_DATA_COMP_EVT.

Public Members

int **err_code**
Indicate the result of storing node composition data by the Provisioner

uint16_t **addr**
Node element address

struct ble_mesh_provisioner_update_local_app_key_comp_param
#include <esp_ble_mesh_defs.h> ESP_BLE_MESH_PROVISIONER_UPDATE_LOCAL_APP_KEY_COMP_EVT.

Public Members

int **err_code**
Indicate the result of updating local AppKey by the Provisioner

uint16_t **net_idx**
NetKey Index

uint16_t **app_idx**
AppKey Index

struct ble_mesh_provisioner_update_local_net_key_comp_param

#include <esp_ble_mesh_defs.h> ESP_BLE_MESH_PROVISIONER_UPDATE_LOCAL_NET_KEY_COMP_EVT.

Public Members

int **err_code**
Indicate the result of updating local NetKey by the Provisioner

uint16_t **net_idx**
NetKey Index

struct ble_mesh_proxy_client_add_filter_addr_comp_param

#include <esp_ble_mesh_defs.h> ESP_BLE_MESH_PROXY_CLIENT_ADD_FILTER_ADDR_COMP_EVT.

Public Members

int **err_code**
Indicate the result of Proxy Client add filter address

uint8_t **conn_handle**
Proxy connection handle

uint16_t **net_idx**
Corresponding NetKey Index

struct ble_mesh_proxy_client_connect_comp_param

#include <esp_ble_mesh_defs.h> ESP_BLE_MESH_PROXY_CLIENT_CONNECT_COMP_EVT.

Public Members

int **err_code**
Indicate the result of Proxy Client connect

esp_ble_mesh_bd_addr_t **addr**
Device address of the Proxy Server

esp_ble_mesh_addr_type_t **addr_type**
Device address type

uint16_t **net_idx**
Corresponding NetKey Index

struct ble_mesh_proxy_client_connected_param

#include <esp_ble_mesh_defs.h> ESP_BLE_MESH_PROXY_CLIENT_CONNECTED_EVT.

Public Members

esp_ble_mesh_bd_addr_t **addr**
Device address of the Proxy Server

esp_ble_mesh_addr_type_t **addr_type**
Device address type

uint8_t **conn_handle**
Proxy connection handle

uint16_t **net_idx**
Corresponding NetKey Index

struct ble_mesh_proxy_client_disconnect_comp_param

#include <esp_ble_mesh_defs.h> ESP_BLE_MESH_PROXY_CLIENT_DISCONNECT_COMP_EVT.

Public Members

int **err_code**
Indicate the result of Proxy Client disconnect

uint8_t **conn_handle**
Proxy connection handle

struct ble_mesh_proxy_client_disconnected_param
#include <esp_ble_mesh_defs.h> ESP_BLE_MESH_PROXY_CLIENT_DISCONNECTED_EVT.

Public Members

esp_ble_mesh_bd_addr_t **addr**
Device address of the Proxy Server

esp_ble_mesh_addr_type_t **addr_type**
Device address type

uint8_t **conn_handle**
Proxy connection handle

uint16_t **net_idx**
Corresponding NetKey Index

uint8_t **reason**
Proxy disconnect reason

struct ble_mesh_proxy_client_recv_adv_pkt_param
#include <esp_ble_mesh_defs.h> ESP_BLE_MESH_PROXY_CLIENT_RECV_ADV_PKT_EVT.

Public Members

esp_ble_mesh_bd_addr_t **addr**
Device address

esp_ble_mesh_addr_type_t **addr_type**
Device address type

uint16_t **net_idx**
Network ID related NetKey Index

uint8_t **net_id**[8]
Network ID contained in the advertising packet

int8_t **rssi**
RSSI of the received advertising packet

struct ble_mesh_proxy_client_recv_filter_status_param
#include <esp_ble_mesh_defs.h> ESP_BLE_MESH_PROXY_CLIENT_RECV_FILTER_STATUS_EVT.

Public Members

uint8_t **conn_handle**
Proxy connection handle

uint16_t **server_addr**
Proxy Server primary element address

uint16_t **net_idx**
Corresponding NetKey Index

uint8_t **filter_type**
Proxy Server filter type(whitelist or blacklist)

uint16_t **list_size**
Number of addresses in the Proxy Server filter list

struct ble_mesh_proxy_client_remove_filter_addr_comp_param
#include <esp_ble_mesh_defs.h> ESP_BLE_MESH_PROXY_CLIENT_REMOVE_FILTER_ADDR_COMP_EVT.

Public Members

int **err_code**
Indicate the result of Proxy Client remove filter address

uint8_t **conn_handle**
Proxy connection handle

uint16_t **net_idx**
Corresponding NetKey Index

struct ble_mesh_proxy_client_set_filter_type_comp_param
#include <esp_ble_mesh_defs.h> ESP_BLE_MESH_PROXY_CLIENT_SET_FILTER_TYPE_COMP_EVT.

Public Members

int **err_code**
Indicate the result of Proxy Client set filter type

uint8_t **conn_handle**
Proxy connection handle

uint16_t **net_idx**
Corresponding NetKey Index

struct ble_mesh_proxy_gatt_disable_comp_param
#include <esp_ble_mesh_defs.h> ESP_BLE_MESH_NODE_PROXY_GATT_DISABLE_COMP_EVT.

Public Members

int **err_code**
Indicate the result of disabling Mesh Proxy Service

struct ble_mesh_proxy_gatt_enable_comp_param
#include <esp_ble_mesh_defs.h> ESP_BLE_MESH_NODE_PROXY_GATT_ENABLE_COMP_EVT.

Public Members

int **err_code**
Indicate the result of enabling Mesh Proxy Service

struct ble_mesh_proxy_identity_enable_comp_param
#include <esp_ble_mesh_defs.h> ESP_BLE_MESH_NODE_PROXY_IDENTITY_ENABLE_COMP_EVT.

Public Members

int **err_code**
Indicate the result of enabling Mesh Proxy advertising

struct ble_mesh_proxy_server_connected_param
#include <esp_ble_mesh_defs.h> ESP_BLE_MESH_PROXY_SERVER_CONNECTED_EVT.

Public Members

uint8_t **conn_handle**
Proxy connection handle

struct ble_mesh_proxy_server_disconnected_param
#include <esp_ble_mesh_defs.h> ESP_BLE_MESH_PROXY_SERVER_DISCONNECTED_EVT.

Public Members

uint8_t **conn_handle**
Proxy connection handle

uint8_t **reason**
Proxy disconnect reason

struct ble_mesh_set_fast_prov_action_comp_param
#include <esp_ble_mesh_defs.h> ESP_BLE_MESH_SET_FAST_PROV_ACTION_COMP_EVT.

Public Members

uint8_t **status_action**
Indicate the result of setting action of fast provisioning

struct ble_mesh_set_fast_prov_info_comp_param
#include <esp_ble_mesh_defs.h> ESP_BLE_MESH_SET_FAST_PROV_INFO_COMP_EVT.

Public Members

uint8_t **status_unicast**
Indicate the result of setting unicast address range of fast provisioning

uint8_t **status_net_idx**
Indicate the result of setting NetKey Index of fast provisioning

uint8_t **status_match**
Indicate the result of setting matching Device UUID of fast provisioning

struct ble_mesh_set_oob_pub_key_comp_param
#include <esp_ble_mesh_defs.h> ESP_BLE_MESH_NODE_PROV_SET_OOB_PUB_KEY_COMP_EVT.

Public Members

int **err_code**
Indicate the result of setting OOB Public Key

struct ble_mesh_set_unprov_dev_name_comp_param
#include <esp_ble_mesh_defs.h> ESP_BLE_MESH_NODE_SET_UNPROV_DEV_NAME_COMP_EVT.

Public Members

int **err_code**
Indicate the result of setting BLE Mesh device name

union esp_ble_mesh_server_state_value_t
#include <esp_ble_mesh_defs.h> Server model state value union.

Public Members

uint8_t **onoff**
The value of the Generic OnOff state

The value of the Light LC Light OnOff state

struct *esp_ble_mesh_server_state_value_t*::**[anonymous] gen_onoff**
The Generic OnOff state

int16_t **level**
The value of the Generic Level state

struct *esp_ble_mesh_server_state_value_t*::**[anonymous] gen_level**
The Generic Level state

uint8_t **onpowerup**
The value of the Generic OnPowerUp state

struct *esp_ble_mesh_server_state_value_t*::**[anonymous] gen_onpowerup**
The Generic OnPowerUp state

uint16_t **power**
The value of the Generic Power Actual state

struct *esp_ble_mesh_server_state_value_t*::**[anonymous] gen_power_actual**
The Generic Power Actual state

uint16_t **lightness**
The value of the Light Lightness Actual state

The value of the Light Lightness Linear state

The value of the Light CTL Lightness state

The value of the Light HSL Lightness state

The value of the Light xyL Lightness state

struct *esp_ble_mesh_server_state_value_t*::**[anonymous] light_lightness_actual**
The Light Lightness Actual state

struct *esp_ble_mesh_server_state_value_t*::**[anonymous] light_lightness_linear**
The Light Lightness Linear state

struct *esp_ble_mesh_server_state_value_t*::**[anonymous] light_ctl_lightness**
The Light CTL Lightness state

uint16_t **temperature**
The value of the Light CTL Temperature state

int16_t **delta_uv**
The value of the Light CTL Delta UV state

struct *esp_ble_mesh_server_state_value_t*::**[anonymous] light_ctl_temp_delta_uv**
The Light CTL Temperature & Delta UV states

uint16_t **hue**
The value of the Light HSL Hue state

uint16_t **saturation**
The value of the Light HSL Saturation state

struct *esp_ble_mesh_server_state_value_t*::**[anonymous]** **light_hsl**
The Light HSL composite state

struct *esp_ble_mesh_server_state_value_t*::**[anonymous]** **light_hsl_lightness**
The Light HSL Lightness state

struct *esp_ble_mesh_server_state_value_t*::**[anonymous]** **light_hsl_hue**
The Light HSL Hue state

struct *esp_ble_mesh_server_state_value_t*::**[anonymous]** **light_hsl_saturation**
The Light HSL Saturation state

struct *esp_ble_mesh_server_state_value_t*::**[anonymous]** **light_xyl_lightness**
The Light xyL Lightness state

struct *esp_ble_mesh_server_state_value_t*::**[anonymous]** **light_lc_light_onoff**
The Light LC Light OnOff state

union esp_ble_mesh_model_cb_param_t
#include <esp_ble_mesh_defs.h> BLE Mesh model callback parameters union.

Public Members

struct *esp_ble_mesh_model_cb_param_t*::*ble_mesh_model_operation_evt_param* **model_operation**
Event parameter of ESP_BLE_MESH_MODEL_OPERATION_EVT

struct *esp_ble_mesh_model_cb_param_t*::*ble_mesh_model_send_comp_param* **model_send_comp**
Event parameter of ESP_BLE_MESH_MODEL_SEND_COMP_EVT

struct *esp_ble_mesh_model_cb_param_t*::*ble_mesh_model_publish_comp_param* **model_publish_comp**
Event parameter of ESP_BLE_MESH_MODEL_PUBLISH_COMP_EVT

struct *esp_ble_mesh_model_cb_param_t*::*ble_mesh_mod_recv_publish_msg_param* **client_recv_publish_msg**
Event parameter of ESP_BLE_MESH_CLIENT_MODEL_RECV_PUBLISH_MSG_EVT

struct *esp_ble_mesh_model_cb_param_t*::*ble_mesh_client_model_send_timeout_param* **client_send_timeout**
Event parameter of ESP_BLE_MESH_CLIENT_MODEL_SEND_TIMEOUT_EVT

struct *esp_ble_mesh_model_cb_param_t*::*ble_mesh_model_publish_update_evt_param* **model_publish_update**
Event parameter of ESP_BLE_MESH_MODEL_PUBLISH_UPDATE_EVT

struct *esp_ble_mesh_model_cb_param_t*::*ble_mesh_server_model_update_state_comp_param* **server_model_update_**
Event parameter of ESP_BLE_MESH_SERVER_MODEL_UPDATE_STATE_COMP_EVT

struct ble_mesh_client_model_send_timeout_param
#include <esp_ble_mesh_defs.h> ESP_BLE_MESH_CLIENT_MODEL_SEND_TIMEOUT_EVT.

Public Members

uint32_t **opcode**
Opcode of the previously sent message

esp_ble_mesh_model_t ***model**
Pointer to the model which sends the previous message

esp_ble_mesh_msg_ctx_t ***ctx**
Pointer to the context of the previous message

struct ble_mesh_mod_recv_publish_msg_param
#include <esp_ble_mesh_defs.h> ESP_BLE_MESH_CLIENT_MODEL_RECV_PUBLISH_MSG_EVT.

Public Members

uint32_t **opcode**
Opcode of the unsolicited received message

esp_ble_mesh_model_t ***model**
Pointer to the model which receives the message

esp_ble_mesh_msg_ctx_t ***ctx**
Pointer to the context of the message

uint16_t **length**
Length of the received message

uint8_t ***msg**
Value of the received message

struct ble_mesh_model_operation_evt_param
#include <esp_ble_mesh_defs.h> ESP_BLE_MESH_MODEL_OPERATION_EVT.

Public Members

uint32_t **opcode**
Opcode of the received message

esp_ble_mesh_model_t ***model**
Pointer to the model which receives the message

esp_ble_mesh_msg_ctx_t ***ctx**
Pointer to the context of the received message

uint16_t **length**
Length of the received message

uint8_t ***msg**
Value of the received message

struct ble_mesh_model_publish_comp_param
#include <esp_ble_mesh_defs.h> ESP_BLE_MESH_MODEL_PUBLISH_COMP_EVT.

Public Members

int **err_code**
Indicate the result of publishing a message

esp_ble_mesh_model_t ***model**
Pointer to the model which publishes the message

struct ble_mesh_model_publish_update_evt_param
#include <esp_ble_mesh_defs.h> ESP_BLE_MESH_MODEL_PUBLISH_UPDATE_EVT.

Public Members

esp_ble_mesh_model_t ***model**
Pointer to the model which is going to update its publish message

struct ble_mesh_model_send_comp_param
#include <esp_ble_mesh_defs.h> ESP_BLE_MESH_MODEL_SEND_COMP_EVT.

Public Members

int **err_code**
Indicate the result of sending a message

uint32_t **opcode**
Opcode of the message

esp_ble_mesh_model_t ***model**
Pointer to the model which sends the message

esp_ble_mesh_msg_ctx_t ***ctx**
Context of the message

struct ble_mesh_server_model_update_state_comp_param
#include <esp_ble_mesh_defs.h> ESP_BLE_MESH_SERVER_MODEL_UPDATE_STATE_COMP_EVT.

Public Members

int **err_code**
Indicate the result of updating server model state

esp_ble_mesh_model_t ***model**
Pointer to the server model which state value is updated

esp_ble_mesh_server_state_type_t **type**
Type of the updated server state

Structures

struct esp_ble_mesh_deinit_param_t
BLE Mesh deinit parameters

Public Members

bool **erase_flash**
Indicate if erasing flash when deinit mesh stack

struct esp_ble_mesh_elem_t
Abstraction that describes a BLE Mesh Element. This structure is associated with struct bt_mesh_elem in mesh_access.h

Public Members

uint16_t **element_addr**
Element Address, assigned during provisioning.

const uint16_t **location**
Location Descriptor (GATT Bluetooth Namespace Descriptors)

const uint8_t **sig_model_count**
SIG Model count

const uint8_t **vnd_model_count**
Vendor Model count

esp_ble_mesh_model_t ***sig_models**
SIG Models

esp_ble_mesh_model_t ***vnd_models**
Vendor Models

struct esp_ble_mesh_model_pub_t

Abstraction that describes a model publication context. This structure is associated with struct bt_mesh_model_pub in mesh_access.h

Public Members

esp_ble_mesh_model_t ***model**

Pointer to the model to which the context belongs. Initialized by the stack.

uint16_t **publish_addr**

Publish Address.

uint16_t **app_idx** : 12

Publish AppKey Index.

uint16_t **cred** : 1

Friendship Credentials Flag.

uint16_t **send_rel** : 1

Force reliable sending (segment acks)

uint8_t **ttl**

Publish Time to Live.

uint8_t **retransmit**

Retransmit Count & Interval Steps.

uint8_t **period**

Publish Period.

uint8_t **period_div** : 4

Divisor for the Period.

uint8_t **fast_period** : 1

Use FastPeriodDivisor

uint8_t **count** : 3

Retransmissions left.

uint32_t **period_start**

Start of the current period.

struct net_buf_simple ***msg**

Publication buffer, containing the publication message.

This will get correctly created when the publication context has been defined using the ESP_BLE_MESH_MODEL_PUB_DEFINE macro.

ESP_BLE_MESH_MODEL_PUB_DEFINE(name, size);

esp_ble_mesh_cb_t **update**

Callback used to update publish message. Initialized by the stack.

struct k_delayed_work **timer**

Publish Period Timer. Initialized by the stack.

uint8_t **dev_role**

Role of the device that is going to publish messages

struct esp_ble_mesh_model_op_t

Abstraction that describes a model operation context. This structure is associated with struct bt_mesh_model_op in mesh_access.h

Public Members

const uint32_t **opcode**
Message opcode

const size_t **min_len**
Message minimum length

esp_ble_mesh_cb_t **param_cb**
Callback used to handle message. Initialized by the stack.

struct esp_ble_mesh_model_cbs_t
Abstraction that describes a model callback structure. This structure is associated with struct bt_mesh_model_cb in mesh_access.h.

Public Members

esp_ble_mesh_cb_t **init_cb**
Callback used during model initialization. Initialized by the stack.

struct esp_ble_mesh_model
Abstraction that describes a Mesh Model instance. This structure is associated with struct bt_mesh_model in mesh_access.h

Public Members

const uint16_t **model_id**
16-bit model identifier

uint16_t **company_id**
16-bit company identifier

uint16_t **vnd_model_id**
16-bit vendor model identifier

struct *esp_ble_mesh_model*::**[anonymous]**::**[anonymous]** **vnd**
Structure encapsulating a model ID with a company ID

union *esp_ble_mesh_model*::**[anonymous]** **[anonymous]**
Model ID

uint8_t **element_idx**
Internal information, mainly for persistent storage Belongs to Nth element

uint8_t **model_idx**
Is the Nth model in the element

uint16_t **flags**
Information about what has changed

esp_ble_mesh_elem_t ***element**
The Element to which this Model belongs

esp_ble_mesh_model_pub_t ***const** **pub**
Model Publication

uint16_t **keys**[**CONFIG_BLE_MESH_MODEL_KEY_COUNT**]
AppKey List

uint16_t **groups**[**CONFIG_BLE_MESH_MODEL_GROUP_COUNT**]
Subscription List (group or virtual addresses)

esp_ble_mesh_model_op_t ***op**
Model operation context

esp_ble_mesh_model_cbs_t ***cb**
Model callback structure

void ***user_data**
Model-specific user data

struct esp_ble_mesh_msg_ctx_t
Message sending context. This structure is associated with struct bt_mesh_msg_ctx in mesh_access.h

Public Members

uint16_t **net_idx**
NetKey Index of the subnet through which to send the message.

uint16_t **app_idx**
AppKey Index for message encryption.

uint16_t **addr**
Remote address.

uint16_t **recv_dst**
Destination address of a received message. Not used for sending.

int8_t **recv_rssi**
RSSI of received packet. Not used for sending.

uint8_t **recv_ttl** : 7
Received TTL value. Not used for sending.

uint8_t **send_rel** : 1
Force sending reliably by using segment acknowledgement

uint8_t **send_ttl**
TTL, or ESP_BLE_MESH_TTL_DEFAULT for default TTL.

uint32_t **recv_op**
Opcode of a received message. Not used for sending message.

esp_ble_mesh_model_t ***model**
Model corresponding to the message, no need to be initialized before sending message

bool **srv_send**
Indicate if the message is sent by a node server model, no need to be initialized before sending message

struct esp_ble_mesh_prov_t
Provisioning properties & capabilities. This structure is associated with struct bt_mesh_prov in mesh_access.h

struct esp_ble_mesh_comp_t
Node Composition data context. This structure is associated with struct bt_mesh_comp in mesh_access.h

Public Members

uint16_t **cid**
16-bit SIG-assigned company identifier

uint16_t **pid**
16-bit vendor-assigned product identifier

uint16_t **vid**
16-bit vendor-assigned product version identifier

size_t **element_count**
Element count

esp_ble_mesh_elem_t ***elements**
A sequence of elements

struct esp_ble_mesh_unprov_dev_add_t
Information of the device which is going to be added for provisioning.

Public Members

esp_ble_mesh_bd_addr_t **addr**
Device address

esp_ble_mesh_addr_type_t **addr_type**
Device address type

uint8_t **uuid**[16]
Device UUID

uint16_t **oob_info**
Device OOB Info ADD_DEV_START_PROV_NOW_FLAG shall not be set if the bearer has both PB-ADV and PB-GATT enabled

esp_ble_mesh_prov_bearer_t **bearer**
Provisioning Bearer

struct esp_ble_mesh_device_delete_t
Information of the device which is going to be deleted.

Public Members

esp_ble_mesh_bd_addr_t **addr**
Device address

esp_ble_mesh_addr_type_t **addr_type**
Device address type

uint8_t **uuid**[16]
Device UUID

uint8_t **flag**
BIT0: device address; BIT1: device UUID

struct esp_ble_mesh_prov_data_info_t
Information of the provisioner which is going to be updated.

Public Members

uint16_t **net_idx**
NetKey Index

uint8_t **flags**
Flags

uint32_t **iv_index**
IV Index

uint8_t **flag**
BIT0: net_idx; BIT1: flags; BIT2: iv_index

struct esp_ble_mesh_node_t
Information of the provisioned node

Public Members

esp_ble_mesh_bd_addr_t **addr**
Node device address

esp_ble_mesh_addr_type_t **addr_type**
Node device address type

uint8_t **dev_uuid**[16]
Device UUID

uint16_t **oob_info**
Node OOB information

uint16_t **unicast_addr**
Node unicast address

uint8_t **element_num**
Node element number

uint16_t **net_idx**
Node NetKey Index

uint8_t **flags**
Node key refresh flag and iv update flag

uint32_t **iv_index**
Node IV Index

uint8_t **dev_key**[16]
Node device key

char **name**[**ESP_BLE_MESH_NODE_NAME_MAX_LEN** + 1]
Node name

uint16_t **comp_length**
Length of Composition Data

uint8_t ***comp_data**
Value of Composition Data

struct esp_ble_mesh_fast_prov_info_t
Context of fast provisioning which need to be set.

Public Members

uint16_t **unicast_min**
Minimum unicast address used for fast provisioning

uint16_t **unicast_max**
Maximum unicast address used for fast provisioning

uint16_t **net_idx**
Netkey index used for fast provisioning

uint8_t **flags**
Flags used for fast provisioning

uint32_t **iv_index**
IV Index used for fast provisioning

uint8_t **offset**
Offset of the UUID to be compared

uint8_t **match_len**
Length of the UUID to be compared

uint8_t **match_val**[16]
Value of UUID to be compared

struct esp_ble_mesh_heartbeat_filter_info_t
Context of Provisioner heartbeat filter information to be set

Public Members

uint16_t **hb_src**
Heartbeat source address (unicast address)

uint16_t **hb_dst**
Heartbeat destination address (unicast address or group address)

struct esp_ble_mesh_client_op_pair_t
BLE Mesh client models related definitions.

Client model Get/Set message opcode and corresponding Status message opcode

Public Members

uint32_t **cli_op**
The client message opcode

uint32_t **status_op**
The server status opcode corresponding to the client message opcode

struct esp_ble_mesh_client_t
Client Model user data context.

Public Members

esp_ble_mesh_model_t ***model**
Pointer to the client model. Initialized by the stack.

int **op_pair_size**
Size of the op_pair

const *esp_ble_mesh_client_op_pair_t* ***op_pair**
Table containing get/set message opcode and corresponding status message opcode

uint32_t **publish_status**
Callback used to handle the received unsolicited message. Initialized by the stack.

void ***internal_data**
Pointer to the internal data of client model

uint8_t **msg_role**
Role of the device (Node/Provisioner) that is going to send messages

struct esp_ble_mesh_client_common_param_t
Common parameters of the messages sent by Client Model.

Public Members

esp_ble_mesh_opcode_t **opcode**
Message opcode

esp_ble_mesh_model_t ***model**
Pointer to the client model structure

esp_ble_mesh_msg_ctx_t **ctx**
The context used to send message

int32_t **msg_timeout**
Timeout value (ms) to get response to the sent message Note: if using default timeout value in menuconfig, make sure to set this value to 0

uint8_t **msg_role**
Role of the device - Node/Provisioner

struct esp_ble_mesh_state_transition_t
Parameters of the server model state transition

Public Functions

BLE_MESH_ATOMIC_DEFINE(flag, *ESP_BLE_MESH_SERVER_FLAG_MAX*)
Flag used to indicate if the transition timer has been started internally.

If the model which contains *esp_ble_mesh_state_transition_t* sets "set_auto_rsp" to ESP_BLE_MESH_SERVER_RSP_BY_APP, the handler of the timer shall be initialized by the users.

And users can use this flag to indicate whether the timer is started or not.

Public Members

bool **just_started**
Indicate if the state transition has just started

uint8_t **trans_time**
State transition time

uint8_t **remain_time**
Remaining time of state transition

uint8_t **delay**
Delay before starting state transition

uint32_t **quo_tt**
Duration of each divided transition step

uint32_t **counter**
Number of steps which the transition duration is divided

uint32_t **total_duration**
State transition total duration

int64_t **start_timestamp**
Time when the state transition is started

struct k_delayed_work **timer**
Timer used for state transition

struct esp_ble_mesh_last_msg_info_t
Parameters of the server model received last same set message.

Public Members

uint8_t **tid**
Transaction number of the last message

uint16_t **src**
Source address of the last message

uint16_t **dst**
Destination address of the last message

int64_t **timestamp**
Time when the last message is received

struct esp_ble_mesh_server_rsp_ctrl_t
Parameters of the Server Model response control

Public Members

uint8_t **get_auto_rsp** : 1
BLE Mesh Server Response Option.

1. If get_auto_rsp is set to ESP_BLE_MESH_SERVER_RSP_BY_APP, then the response of Client Get messages need to be replied by the application;
2. If get_auto_rsp is set to ESP_BLE_MESH_SERVER_AUTO_RSP, then the response of Client Get messages will be replied by the server models;
3. If set_auto_rsp is set to ESP_BLE_MESH_SERVER_RSP_BY_APP, then the response of Client Set messages need to be replied by the application;
4. If set_auto_rsp is set to ESP_BLE_MESH_SERVER_AUTO_RSP, then the response of Client Set messages will be replied by the server models;
5. If status_auto_rsp is set to ESP_BLE_MESH_SERVER_RSP_BY_APP, then the response of Server Status messages need to be replied by the application;
6. If status_auto_rsp is set to ESP_BLE_MESH_SERVER_AUTO_RSP, then the response of Server Status messages will be replied by the server models;Response control for Client Get messages

uint8_t **set_auto_rsp** : 1
Response control for Client Set messages

uint8_t **status_auto_rsp** : 1
Response control for Server Status messages

Macros

ESP_BLE_MESH_SDU_MAX_LEN
< The maximum length of a BLE Mesh message, including Opcode, Payload and TransMIC Length of a short Mesh MIC.

ESP_BLE_MESH_MIC_SHORT
Length of a long Mesh MIC.

ESP_BLE_MESH_MIC_LONG
The maximum length of a BLE Mesh provisioned node name

ESP_BLE_MESH_NODE_NAME_MAX_LEN
The maximum length of a BLE Mesh unprovisioned device name

ESP_BLE_MESH_DEVICE_NAME_MAX_LEN
The maximum length of settings user id

ESP_BLE_MESH_SETTINGS_UID_SIZE
Invalid settings index

ESP_BLE_MESH_INVALID_SETTINGS_IDX
Define the BLE Mesh octet 16 bytes size

ESP_BLE_MESH_OCTET16_LEN

ESP_BLE_MESH_OCTET8_LEN

ESP_BLE_MESH_CID_NVAL
Special TTL value to request using configured default TTL

ESP_BLE_MESH_TTL_DEFAULT
Maximum allowed TTL value

ESP_BLE_MESH_TTL_MAX

ESP_BLE_MESH_ADDR_UNASSIGNED

ESP_BLE_MESH_ADDR_ALL_NODES

ESP_BLE_MESH_ADDR_PROXIES

ESP_BLE_MESH_ADDR_FRIENDS

ESP_BLE_MESH_ADDR_RELAYS

ESP_BLE_MESH_KEY_UNUSED

ESP_BLE_MESH_KEY_DEV

ESP_BLE_MESH_KEY_PRIMARY

ESP_BLE_MESH_KEY_ANY
Primary Network Key index

ESP_BLE_MESH_NET_PRIMARY
Relay state value

ESP_BLE_MESH_RELAY_DISABLED

ESP_BLE_MESH_RELAY_ENABLED

ESP_BLE_MESH_RELAY_NOT_SUPPORTED
Beacon state value

ESP_BLE_MESH_BEACON_DISABLED

ESP_BLE_MESH_BEACON_ENABLED
GATT Proxy state value

ESP_BLE_MESH_GATT_PROXY_DISABLED

ESP_BLE_MESH_GATT_PROXY_ENABLED

ESP_BLE_MESH_GATT_PROXY_NOT_SUPPORTED
Friend state value

ESP_BLE_MESH_FRIEND_DISABLED

ESP_BLE_MESH_FRIEND_ENABLED

ESP_BLE_MESH_FRIEND_NOT_SUPPORTED
Node identity state value

ESP_BLE_MESH_NODE_IDENTITY_STOPPED

ESP_BLE_MESH_NODE_IDENTITY_RUNNING

ESP_BLE_MESH_NODE_IDENTITY_NOT_SUPPORTED
Supported features

ESP_BLE_MESH_FEATURE_RELAY

ESP_BLE_MESH_FEATURE_PROXY

ESP_BLE_MESH_FEATURE_FRIEND

ESP_BLE_MESH_FEATURE_LOW_POWER

ESP_BLE_MESH_FEATURE_ALL_SUPPORTED

ESP_BLE_MESH_ADDR_IS_UNICAST(addr)

ESP_BLE_MESH_ADDR_IS_GROUP(addr)

ESP_BLE_MESH_ADDR_IS_VIRTUAL(addr)

ESP_BLE_MESH_ADDR_IS_RFU(addr)

ESP_BLE_MESH_INVALID_NODE_INDEX

ESP_BLE_MESH_TRANSMIT(count, int_ms)
Encode transmission count & interval steps.

Note For example, ESP_BLE_MESH_TRANSMIT(2, 20) means that the message will be sent about 90ms(count is 3, step is 1, interval is 30 ms which includes 10ms of advertising interval random delay).

Return BLE Mesh transmit value that can be used e.g. for the default values of the Configuration Model data.

Parameters

- `count`: Number of retransmissions (first transmission is excluded).
- `int_ms`: Interval steps in milliseconds. Must be greater than 0 and a multiple of 10.

ESP_BLE_MESH_GET_TRANSMIT_COUNT(transmit)
Decode transmit count from a transmit value.

Return Transmission count (actual transmissions equal to N + 1).

Parameters

- `transmit`: Encoded transmit count & interval value.

ESP_BLE_MESH_GET_TRANSMIT_INTERVAL(transmit)
Decode transmit interval from a transmit value.

Return Transmission interval in milliseconds.

Parameters

- `transmit`: Encoded transmit count & interval value.

ESP_BLE_MESH_PUBLISH_TRANSMIT(count, int_ms)
Encode Publish Retransmit count & interval steps.

Return BLE Mesh transmit value that can be used e.g. for the default values of the Configuration Model data.

Parameters

- `count`: Number of retransmissions (first transmission is excluded).
- `int_ms`: Interval steps in milliseconds. Must be greater than 0 and a multiple of 50.

ESP_BLE_MESH_GET_PUBLISH_TRANSMIT_COUNT(transmit)
Decode Publish Retransmit count from a given value.

Return Retransmission count (actual transmissions equal to N + 1).

Parameters

- `transmit`: Encoded Publish Retransmit count & interval value.

ESP_BLE_MESH_GET_PUBLISH_TRANSMIT_INTERVAL(transmit)
Decode Publish Retransmit interval from a given value.

Callbacks which are not needed to be initialized by users (set with 0 and will be initialized internally)

Return Transmission interval in milliseconds.

Parameters

- `transmit`: Encoded Publish Retransmit count & interval value.

ESP_BLE_MESH_PROV_STATIC_OOB_MAX_LEN
Maximum length of string used by Output OOB authentication

ESP_BLE_MESH_PROV_OUTPUT_OOB_MAX_LEN
Maximum length of string used by Output OOB authentication

ESP_BLE_MESH_PROV_INPUT_OOB_MAX_LEN
Macros used to define message opcode

ESP_BLE_MESH_MODEL_OP_1(b0)

ESP_BLE_MESH_MODEL_OP_2(b0, b1)

ESP_BLE_MESH_MODEL_OP_3(b0, cid)
This macro is associated with BLE_MESH_MODEL_CB in mesh_access.h

ESP_BLE_MESH_SIG_MODEL(_id, _op, _pub, _user_data)
This macro is associated with BLE_MESH_MODEL_VND_CB in mesh_access.h

ESP_BLE_MESH_VENDOR_MODEL(_company, _id, _op, _pub, _user_data)

ESP_BLE_MESH_ELEMENT(_loc, _mods, _vnd_mods)
Helper to define a BLE Mesh element within an array.

In case the element has no SIG or Vendor models, the helper macro ESP_BLE_MESH_MODEL_NONE can be given instead.

Note This macro is associated with BLE_MESH_ELEM in mesh_access.h
Parameters
- `_loc`: Location Descriptor.
- `_mods`: Array of SIG models.
- `_vnd_mods`: Array of vendor models.

ESP_BLE_MESH_PROV(uuid, sta_val, sta_val_len, out_size, out_act, in_size, in_act)

BT_OCTET32_LEN

BD_ADDR_LEN

ESP_BLE_MESH_ADDR_TYPE_PUBLIC

ESP_BLE_MESH_ADDR_TYPE_RANDOM

ESP_BLE_MESH_ADDR_TYPE_RPA_PUBLIC

ESP_BLE_MESH_ADDR_TYPE_RPA_RANDOM

ESP_BLE_MESH_MODEL_PUB_DEFINE(_name, _msg_len, _role)
Define a model publication context.

Parameters
- `_name`: Variable name given to the context.
- `_msg_len`: Length of the publication message.
- `_role`: Role of the device which contains the model.

ESP_BLE_MESH_MODEL_OP(_opcode, _min_len)
Define a model operation context.

Parameters
- `_opcode`: Message opcode.
- `_min_len`: Message minimum length.

ESP_BLE_MESH_MODEL_OP_END
Define the terminator for the model operation table. Each model operation struct array must use this terminator as the end tag of the operation unit.

ESP_BLE_MESH_MODEL_NONE
Helper to define an empty model array. This structure is associated with BLE_MESH_MODEL_NONE in mesh_access.h

ADD_DEV_RM_AFTER_PROV_FLAG
Device will be removed from queue after provisioned successfully

ADD_DEV_START_PROV_NOW_FLAG
Start provisioning device immediately

ADD_DEV_FLUSHABLE_DEV_FLAG
Device can be remove when queue is full and new device is going to added

DEL_DEV_ADDR_FLAG

DEL_DEV_UUID_FLAG

PROV_DATA_NET_IDX_FLAG

PROV_DATA_FLAGS_FLAG

PROV_DATA_IV_INDEX_FLAG

ESP_BLE_MESH_HEARTBEAT_FILTER_ACCEPTLIST

ESP_BLE_MESH_HEARTBEAT_FILTER_REJECTLIST
Provisioner heartbeat filter operation

ESP_BLE_MESH_HEARTBEAT_FILTER_ADD

ESP_BLE_MESH_HEARTBEAT_FILTER_REMOVE

ESP_BLE_MESH_MODEL_ID_CONFIG_SRV
BLE Mesh models related Model ID and Opcode definitions.

< Foundation Models

ESP_BLE_MESH_MODEL_ID_CONFIG_CLI

ESP_BLE_MESH_MODEL_ID_HEALTH_SRV

ESP_BLE_MESH_MODEL_ID_HEALTH_CLI
Models from the Mesh Model Specification

ESP_BLE_MESH_MODEL_ID_GEN_ONOFF_SRV

ESP_BLE_MESH_MODEL_ID_GEN_ONOFF_CLI

ESP_BLE_MESH_MODEL_ID_GEN_LEVEL_SRV

ESP_BLE_MESH_MODEL_ID_GEN_LEVEL_CLI

ESP_BLE_MESH_MODEL_ID_GEN_DEF_TRANS_TIME_SRV

ESP_BLE_MESH_MODEL_ID_GEN_DEF_TRANS_TIME_CLI

ESP_BLE_MESH_MODEL_ID_GEN_POWER_ONOFF_SRV

ESP_BLE_MESH_MODEL_ID_GEN_POWER_ONOFF_SETUP_SRV

ESP_BLE_MESH_MODEL_ID_GEN_POWER_ONOFF_CLI

ESP_BLE_MESH_MODEL_ID_GEN_POWER_LEVEL_SRV

ESP_BLE_MESH_MODEL_ID_GEN_POWER_LEVEL_SETUP_SRV

ESP_BLE_MESH_MODEL_ID_GEN_POWER_LEVEL_CLI

ESP_BLE_MESH_MODEL_ID_GEN_BATTERY_SRV

ESP_BLE_MESH_MODEL_ID_GEN_BATTERY_CLI

ESP_BLE_MESH_MODEL_ID_GEN_LOCATION_SRV

ESP_BLE_MESH_MODEL_ID_GEN_LOCATION_SETUP_SRV

ESP_BLE_MESH_MODEL_ID_GEN_LOCATION_CLI

ESP_BLE_MESH_MODEL_ID_GEN_ADMIN_PROP_SRV

ESP_BLE_MESH_MODEL_ID_GEN_MANUFACTURER_PROP_SRV

ESP_BLE_MESH_MODEL_ID_GEN_USER_PROP_SRV

ESP_BLE_MESH_MODEL_ID_GEN_CLIENT_PROP_SRV

ESP_BLE_MESH_MODEL_ID_GEN_PROP_CLI

ESP_BLE_MESH_MODEL_ID_SENSOR_SRV

ESP_BLE_MESH_MODEL_ID_SENSOR_SETUP_SRV

ESP_BLE_MESH_MODEL_ID_SENSOR_CLI

ESP_BLE_MESH_MODEL_ID_TIME_SRV

ESP_BLE_MESH_MODEL_ID_TIME_SETUP_SRV

ESP_BLE_MESH_MODEL_ID_TIME_CLI

ESP_BLE_MESH_MODEL_ID_SCENE_SRV

ESP_BLE_MESH_MODEL_ID_SCENE_SETUP_SRV

ESP_BLE_MESH_MODEL_ID_SCENE_CLI

ESP_BLE_MESH_MODEL_ID_SCHEDULER_SRV

ESP_BLE_MESH_MODEL_ID_SCHEDULER_SETUP_SRV

ESP_BLE_MESH_MODEL_ID_SCHEDULER_CLI

ESP_BLE_MESH_MODEL_ID_LIGHT_LIGHTNESS_SRV

ESP_BLE_MESH_MODEL_ID_LIGHT_LIGHTNESS_SETUP_SRV

ESP_BLE_MESH_MODEL_ID_LIGHT_LIGHTNESS_CLI

ESP_BLE_MESH_MODEL_ID_LIGHT_CTL_SRV

ESP_BLE_MESH_MODEL_ID_LIGHT_CTL_SETUP_SRV

ESP_BLE_MESH_MODEL_ID_LIGHT_CTL_CLI

ESP_BLE_MESH_MODEL_ID_LIGHT_CTL_TEMP_SRV

ESP_BLE_MESH_MODEL_ID_LIGHT_HSL_SRV

ESP_BLE_MESH_MODEL_ID_LIGHT_HSL_SETUP_SRV

ESP_BLE_MESH_MODEL_ID_LIGHT_HSL_CLI

ESP_BLE_MESH_MODEL_ID_LIGHT_HSL_HUE_SRV

ESP_BLE_MESH_MODEL_ID_LIGHT_HSL_SAT_SRV

ESP_BLE_MESH_MODEL_ID_LIGHT_XYL_SRV

ESP_BLE_MESH_MODEL_ID_LIGHT_XYL_SETUP_SRV

ESP_BLE_MESH_MODEL_ID_LIGHT_XYL_CLI

ESP_BLE_MESH_MODEL_ID_LIGHT_LC_SRV

ESP_BLE_MESH_MODEL_ID_LIGHT_LC_SETUP_SRV

ESP_BLE_MESH_MODEL_ID_LIGHT_LC_CLI

ESP_BLE_MESH_MODEL_OP_BEACON_GET
Config Beacon Get

ESP_BLE_MESH_MODEL_OP_COMPOSITION_DATA_GET
Config Composition Data Get

ESP_BLE_MESH_MODEL_OP_DEFAULT_TTL_GET
Config Default TTL Get

ESP_BLE_MESH_MODEL_OP_GATT_PROXY_GET
Config GATT Proxy Get

ESP_BLE_MESH_MODEL_OP_RELAY_GET
Config Relay Get

ESP_BLE_MESH_MODEL_OP_MODEL_PUB_GET
Config Model Publication Get

ESP_BLE_MESH_MODEL_OP_FRIEND_GET
Config Friend Get

ESP_BLE_MESH_MODEL_OP_HEARTBEAT_PUB_GET
Config Heartbeat Publication Get

ESP_BLE_MESH_MODEL_OP_HEARTBEAT_SUB_GET
Config Heartbeat Subscription Get

ESP_BLE_MESH_MODEL_OP_NET_KEY_GET
Config NetKey Get

ESP_BLE_MESH_MODEL_OP_APP_KEY_GET
Config AppKey Get

ESP_BLE_MESH_MODEL_OP_NODE_IDENTITY_GET
Config Node Identity Get

ESP_BLE_MESH_MODEL_OP_SIG_MODEL_SUB_GET
Config SIG Model Subscription Get

ESP_BLE_MESH_MODEL_OP_VENDOR_MODEL_SUB_GET
Config Vendor Model Subscription Get

ESP_BLE_MESH_MODEL_OP_SIG_MODEL_APP_GET
Config SIG Model App Get

ESP_BLE_MESH_MODEL_OP_VENDOR_MODEL_APP_GET
Config Vendor Model App Get

ESP_BLE_MESH_MODEL_OP_KEY_REFRESH_PHASE_GET
Config Key Refresh Phase Get

ESP_BLE_MESH_MODEL_OP_LPN_POLLTIMEOUT_GET
Config Low Power Node PollTimeout Get

ESP_BLE_MESH_MODEL_OP_NETWORK_TRANSMIT_GET
Config Network Transmit Get

ESP_BLE_MESH_MODEL_OP_BEACON_SET
Config Beacon Set

ESP_BLE_MESH_MODEL_OP_DEFAULT_TTL_SET
Config Default TTL Set

ESP_BLE_MESH_MODEL_OP_GATT_PROXY_SET
Config GATT Proxy Set

ESP_BLE_MESH_MODEL_OP_RELAY_SET
Config Relay Set

ESP_BLE_MESH_MODEL_OP_MODEL_PUB_SET
Config Model Publication Set

ESP_BLE_MESH_MODEL_OP_MODEL_SUB_ADD
Config Model Subscription Add

ESP_BLE_MESH_MODEL_OP_MODEL_SUB_VIRTUAL_ADDR_ADD
Config Model Subscription Virtual Address Add

ESP_BLE_MESH_MODEL_OP_MODEL_SUB_DELETE
Config Model Subscription Delete

ESP_BLE_MESH_MODEL_OP_MODEL_SUB_VIRTUAL_ADDR_DELETE
Config Model Subscription Virtual Address Delete

ESP_BLE_MESH_MODEL_OP_MODEL_SUB_OVERWRITE
Config Model Subscription Overwrite

ESP_BLE_MESH_MODEL_OP_MODEL_SUB_VIRTUAL_ADDR_OVERWRITE
Config Model Subscription Virtual Address Overwrite

ESP_BLE_MESH_MODEL_OP_NET_KEY_ADD
Config NetKey Add

ESP_BLE_MESH_MODEL_OP_APP_KEY_ADD
Config AppKey Add

ESP_BLE_MESH_MODEL_OP_MODEL_APP_BIND
Config Model App Bind

ESP_BLE_MESH_MODEL_OP_NODE_RESET
Config Node Reset

ESP_BLE_MESH_MODEL_OP_FRIEND_SET
Config Friend Set

ESP_BLE_MESH_MODEL_OP_HEARTBEAT_PUB_SET
Config Heartbeat Publication Set

ESP_BLE_MESH_MODEL_OP_HEARTBEAT_SUB_SET
Config Heartbeat Subscription Set

ESP_BLE_MESH_MODEL_OP_NET_KEY_UPDATE
Config NetKey Update

ESP_BLE_MESH_MODEL_OP_NET_KEY_DELETE
Config NetKey Delete

ESP_BLE_MESH_MODEL_OP_APP_KEY_UPDATE
Config AppKey Update

ESP_BLE_MESH_MODEL_OP_APP_KEY_DELETE
Config AppKey Delete

ESP_BLE_MESH_MODEL_OP_NODE_IDENTITY_SET
Config Node Identity Set

ESP_BLE_MESH_MODEL_OP_KEY_REFRESH_PHASE_SET
Config Key Refresh Phase Set

ESP_BLE_MESH_MODEL_OP_MODEL_PUB_VIRTUAL_ADDR_SET
Config Model Publication Virtual Address Set

ESP_BLE_MESH_MODEL_OP_MODEL_SUB_DELETE_ALL
Config Model Subscription Delete All

ESP_BLE_MESH_MODEL_OP_MODEL_APP_UNBIND
Config Model App Unbind

ESP_BLE_MESH_MODEL_OP_NETWORK_TRANSMIT_SET
Config Network Transmit Set

ESP_BLE_MESH_MODEL_OP_BEACON_STATUS

ESP_BLE_MESH_MODEL_OP_COMPOSITION_DATA_STATUS

ESP_BLE_MESH_MODEL_OP_DEFAULT_TTL_STATUS

ESP_BLE_MESH_MODEL_OP_GATT_PROXY_STATUS

ESP_BLE_MESH_MODEL_OP_RELAY_STATUS

ESP_BLE_MESH_MODEL_OP_MODEL_PUB_STATUS

ESP_BLE_MESH_MODEL_OP_MODEL_SUB_STATUS

ESP_BLE_MESH_MODEL_OP_SIG_MODEL_SUB_LIST

ESP_BLE_MESH_MODEL_OP_VENDOR_MODEL_SUB_LIST

ESP_BLE_MESH_MODEL_OP_NET_KEY_STATUS

ESP_BLE_MESH_MODEL_OP_NET_KEY_LIST

ESP_BLE_MESH_MODEL_OP_APP_KEY_STATUS

ESP_BLE_MESH_MODEL_OP_APP_KEY_LIST

ESP_BLE_MESH_MODEL_OP_NODE_IDENTITY_STATUS

ESP_BLE_MESH_MODEL_OP_MODEL_APP_STATUS

ESP_BLE_MESH_MODEL_OP_SIG_MODEL_APP_LIST

ESP_BLE_MESH_MODEL_OP_VENDOR_MODEL_APP_LIST

ESP_BLE_MESH_MODEL_OP_NODE_RESET_STATUS

ESP_BLE_MESH_MODEL_OP_FRIEND_STATUS

ESP_BLE_MESH_MODEL_OP_KEY_REFRESH_PHASE_STATUS

ESP_BLE_MESH_MODEL_OP_HEARTBEAT_PUB_STATUS

ESP_BLE_MESH_MODEL_OP_HEARTBEAT_SUB_STATUS

ESP_BLE_MESH_MODEL_OP_LPN_POLLTIMEOUT_STATUS

ESP_BLE_MESH_MODEL_OP_NETWORK_TRANSMIT_STATUS

ESP_BLE_MESH_CFG_STATUS_SUCCESS

ESP_BLE_MESH_CFG_STATUS_INVALID_ADDRESS

ESP_BLE_MESH_CFG_STATUS_INVALID_MODEL

ESP_BLE_MESH_CFG_STATUS_INVALID_APPKEY

ESP_BLE_MESH_CFG_STATUS_INVALID_NETKEY

ESP_BLE_MESH_CFG_STATUS_INSUFFICIENT_RESOURCES

ESP_BLE_MESH_CFG_STATUS_KEY_INDEX_ALREADY_STORED

ESP_BLE_MESH_CFG_STATUS_INVALID_PUBLISH_PARAMETERS

ESP_BLE_MESH_CFG_STATUS_NOT_A_SUBSCRIBE_MODEL

ESP_BLE_MESH_CFG_STATUS_STORAGE_FAILURE

ESP_BLE_MESH_CFG_STATUS_FEATURE_NOT_SUPPORTED

ESP_BLE_MESH_CFG_STATUS_CANNOT_UPDATE

ESP_BLE_MESH_CFG_STATUS_CANNOT_REMOVE

ESP_BLE_MESH_CFG_STATUS_CANNOT_BIND

ESP_BLE_MESH_CFG_STATUS_TEMP_UNABLE_TO_CHANGE_STATE

ESP_BLE_MESH_CFG_STATUS_CANNOT_SET

ESP_BLE_MESH_CFG_STATUS_UNSPECIFIED_ERROR

ESP_BLE_MESH_CFG_STATUS_INVALID_BINDING

ESP_BLE_MESH_MODEL_OP_HEALTH_FAULT_GET
Health Fault Get

ESP_BLE_MESH_MODEL_OP_HEALTH_PERIOD_GET
Health Period Get

ESP_BLE_MESH_MODEL_OP_ATTENTION_GET
Health Attention Get

ESP_BLE_MESH_MODEL_OP_HEALTH_FAULT_CLEAR
Health Fault Clear

ESP_BLE_MESH_MODEL_OP_HEALTH_FAULT_CLEAR_UNACK
Health Fault Clear Unacknowledged

ESP_BLE_MESH_MODEL_OP_HEALTH_FAULT_TEST
Health Fault Test

ESP_BLE_MESH_MODEL_OP_HEALTH_FAULT_TEST_UNACK
Health Fault Test Unacknowledged

ESP_BLE_MESH_MODEL_OP_HEALTH_PERIOD_SET
Health Period Set

ESP_BLE_MESH_MODEL_OP_HEALTH_PERIOD_SET_UNACK
Health Period Set Unacknowledged

ESP_BLE_MESH_MODEL_OP_ATTENTION_SET
Health Attention Set

ESP_BLE_MESH_MODEL_OP_ATTENTION_SET_UNACK
Health Attention Set Unacknowledged

ESP_BLE_MESH_MODEL_OP_HEALTH_CURRENT_STATUS

ESP_BLE_MESH_MODEL_OP_HEALTH_FAULT_STATUS

ESP_BLE_MESH_MODEL_OP_HEALTH_PERIOD_STATUS

ESP_BLE_MESH_MODEL_OP_ATTENTION_STATUS

ESP_BLE_MESH_MODEL_OP_GEN_ONOFF_GET

ESP_BLE_MESH_MODEL_OP_GEN_ONOFF_SET

ESP_BLE_MESH_MODEL_OP_GEN_ONOFF_SET_UNACK

ESP_BLE_MESH_MODEL_OP_GEN_ONOFF_STATUS
Generic Level Message Opcode

ESP_BLE_MESH_MODEL_OP_GEN_LEVEL_GET

ESP_BLE_MESH_MODEL_OP_GEN_LEVEL_SET

ESP_BLE_MESH_MODEL_OP_GEN_LEVEL_SET_UNACK

ESP_BLE_MESH_MODEL_OP_GEN_LEVEL_STATUS

ESP_BLE_MESH_MODEL_OP_GEN_DELTA_SET

ESP_BLE_MESH_MODEL_OP_GEN_DELTA_SET_UNACK

ESP_BLE_MESH_MODEL_OP_GEN_MOVE_SET

ESP_BLE_MESH_MODEL_OP_GEN_MOVE_SET_UNACK
Generic Default Transition Time Message Opcode

ESP_BLE_MESH_MODEL_OP_GEN_DEF_TRANS_TIME_GET

ESP_BLE_MESH_MODEL_OP_GEN_DEF_TRANS_TIME_SET

ESP_BLE_MESH_MODEL_OP_GEN_DEF_TRANS_TIME_SET_UNACK

ESP_BLE_MESH_MODEL_OP_GEN_DEF_TRANS_TIME_STATUS
Generic Power OnOff Message Opcode

ESP_BLE_MESH_MODEL_OP_GEN_ONPOWERUP_GET

ESP_BLE_MESH_MODEL_OP_GEN_ONPOWERUP_STATUS
Generic Power OnOff Setup Message Opcode

ESP_BLE_MESH_MODEL_OP_GEN_ONPOWERUP_SET

ESP_BLE_MESH_MODEL_OP_GEN_ONPOWERUP_SET_UNACK
Generic Power Level Message Opcode

ESP_BLE_MESH_MODEL_OP_GEN_POWER_LEVEL_GET

ESP_BLE_MESH_MODEL_OP_GEN_POWER_LEVEL_SET

ESP_BLE_MESH_MODEL_OP_GEN_POWER_LEVEL_SET_UNACK

ESP_BLE_MESH_MODEL_OP_GEN_POWER_LEVEL_STATUS

ESP_BLE_MESH_MODEL_OP_GEN_POWER_LAST_GET

ESP_BLE_MESH_MODEL_OP_GEN_POWER_LAST_STATUS

ESP_BLE_MESH_MODEL_OP_GEN_POWER_DEFAULT_GET

ESP_BLE_MESH_MODEL_OP_GEN_POWER_DEFAULT_STATUS

ESP_BLE_MESH_MODEL_OP_GEN_POWER_RANGE_GET

ESP_BLE_MESH_MODEL_OP_GEN_POWER_RANGE_STATUS
Generic Power Level Setup Message Opcode

ESP_BLE_MESH_MODEL_OP_GEN_POWER_DEFAULT_SET

ESP_BLE_MESH_MODEL_OP_GEN_POWER_DEFAULT_SET_UNACK

ESP_BLE_MESH_MODEL_OP_GEN_POWER_RANGE_SET

ESP_BLE_MESH_MODEL_OP_GEN_POWER_RANGE_SET_UNACK
Generic Battery Message Opcode

ESP_BLE_MESH_MODEL_OP_GEN_BATTERY_GET

ESP_BLE_MESH_MODEL_OP_GEN_BATTERY_STATUS
Generic Location Message Opcode

ESP_BLE_MESH_MODEL_OP_GEN_LOC_GLOBAL_GET

ESP_BLE_MESH_MODEL_OP_GEN_LOC_GLOBAL_STATUS

ESP_BLE_MESH_MODEL_OP_GEN_LOC_LOCAL_GET

ESP_BLE_MESH_MODEL_OP_GEN_LOC_LOCAL_STATUS
Generic Location Setup Message Opcode

ESP_BLE_MESH_MODEL_OP_GEN_LOC_GLOBAL_SET

ESP_BLE_MESH_MODEL_OP_GEN_LOC_GLOBAL_SET_UNACK

ESP_BLE_MESH_MODEL_OP_GEN_LOC_LOCAL_SET

ESP_BLE_MESH_MODEL_OP_GEN_LOC_LOCAL_SET_UNACK
Generic Manufacturer Property Message Opcode

ESP_BLE_MESH_MODEL_OP_GEN_MANUFACTURER_PROPERTIES_GET

ESP_BLE_MESH_MODEL_OP_GEN_MANUFACTURER_PROPERTIES_STATUS

ESP_BLE_MESH_MODEL_OP_GEN_MANUFACTURER_PROPERTY_GET

ESP_BLE_MESH_MODEL_OP_GEN_MANUFACTURER_PROPERTY_SET

ESP_BLE_MESH_MODEL_OP_GEN_MANUFACTURER_PROPERTY_SET_UNACK

ESP_BLE_MESH_MODEL_OP_GEN_MANUFACTURER_PROPERTY_STATUS
Generic Admin Property Message Opcode

ESP_BLE_MESH_MODEL_OP_GEN_ADMIN_PROPERTIES_GET

ESP_BLE_MESH_MODEL_OP_GEN_ADMIN_PROPERTIES_STATUS

ESP_BLE_MESH_MODEL_OP_GEN_ADMIN_PROPERTY_GET

ESP_BLE_MESH_MODEL_OP_GEN_ADMIN_PROPERTY_SET

ESP_BLE_MESH_MODEL_OP_GEN_ADMIN_PROPERTY_SET_UNACK

ESP_BLE_MESH_MODEL_OP_GEN_ADMIN_PROPERTY_STATUS
Generic User Property Message Opcode

ESP_BLE_MESH_MODEL_OP_GEN_USER_PROPERTIES_GET

ESP_BLE_MESH_MODEL_OP_GEN_USER_PROPERTIES_STATUS

ESP_BLE_MESH_MODEL_OP_GEN_USER_PROPERTY_GET

ESP_BLE_MESH_MODEL_OP_GEN_USER_PROPERTY_SET

ESP_BLE_MESH_MODEL_OP_GEN_USER_PROPERTY_SET_UNACK

ESP_BLE_MESH_MODEL_OP_GEN_USER_PROPERTY_STATUS
Generic Client Property Message Opcode

ESP_BLE_MESH_MODEL_OP_GEN_CLIENT_PROPERTIES_GET

ESP_BLE_MESH_MODEL_OP_GEN_CLIENT_PROPERTIES_STATUS

ESP_BLE_MESH_MODEL_OP_SENSOR_DESCRIPTOR_GET

ESP_BLE_MESH_MODEL_OP_SENSOR_DESCRIPTOR_STATUS

ESP_BLE_MESH_MODEL_OP_SENSOR_GET

ESP_BLE_MESH_MODEL_OP_SENSOR_STATUS

ESP_BLE_MESH_MODEL_OP_SENSOR_COLUMN_GET

ESP_BLE_MESH_MODEL_OP_SENSOR_COLUMN_STATUS

ESP_BLE_MESH_MODEL_OP_SENSOR_SERIES_GET

ESP_BLE_MESH_MODEL_OP_SENSOR_SERIES_STATUS
Sensor Setup Message Opcode

ESP_BLE_MESH_MODEL_OP_SENSOR_CADENCE_GET

ESP_BLE_MESH_MODEL_OP_SENSOR_CADENCE_SET

ESP_BLE_MESH_MODEL_OP_SENSOR_CADENCE_SET_UNACK

ESP_BLE_MESH_MODEL_OP_SENSOR_CADENCE_STATUS

ESP_BLE_MESH_MODEL_OP_SENSOR_SETTINGS_GET

ESP_BLE_MESH_MODEL_OP_SENSOR_SETTINGS_STATUS

ESP_BLE_MESH_MODEL_OP_SENSOR_SETTING_GET

ESP_BLE_MESH_MODEL_OP_SENSOR_SETTING_SET

ESP_BLE_MESH_MODEL_OP_SENSOR_SETTING_SET_UNACK

ESP_BLE_MESH_MODEL_OP_SENSOR_SETTING_STATUS

ESP_BLE_MESH_MODEL_OP_TIME_GET

ESP_BLE_MESH_MODEL_OP_TIME_SET

ESP_BLE_MESH_MODEL_OP_TIME_STATUS

ESP_BLE_MESH_MODEL_OP_TIME_ROLE_GET

ESP_BLE_MESH_MODEL_OP_TIME_ROLE_SET

ESP_BLE_MESH_MODEL_OP_TIME_ROLE_STATUS

ESP_BLE_MESH_MODEL_OP_TIME_ZONE_GET

ESP_BLE_MESH_MODEL_OP_TIME_ZONE_SET

ESP_BLE_MESH_MODEL_OP_TIME_ZONE_STATUS

ESP_BLE_MESH_MODEL_OP_TAI_UTC_DELTA_GET

ESP_BLE_MESH_MODEL_OP_TAI_UTC_DELTA_SET

ESP_BLE_MESH_MODEL_OP_TAI_UTC_DELTA_STATUS
Scene Message Opcode

ESP_BLE_MESH_MODEL_OP_SCENE_GET

ESP_BLE_MESH_MODEL_OP_SCENE_RECALL

ESP_BLE_MESH_MODEL_OP_SCENE_RECALL_UNACK

ESP_BLE_MESH_MODEL_OP_SCENE_STATUS

ESP_BLE_MESH_MODEL_OP_SCENE_REGISTER_GET

ESP_BLE_MESH_MODEL_OP_SCENE_REGISTER_STATUS
Scene Setup Message Opcode

ESP_BLE_MESH_MODEL_OP_SCENE_STORE

ESP_BLE_MESH_MODEL_OP_SCENE_STORE_UNACK

ESP_BLE_MESH_MODEL_OP_SCENE_DELETE

ESP_BLE_MESH_MODEL_OP_SCENE_DELETE_UNACK
Scheduler Message Opcode

ESP_BLE_MESH_MODEL_OP_SCHEDULER_ACT_GET

ESP_BLE_MESH_MODEL_OP_SCHEDULER_ACT_STATUS

ESP_BLE_MESH_MODEL_OP_SCHEDULER_GET

ESP_BLE_MESH_MODEL_OP_SCHEDULER_STATUS
Scheduler Setup Message Opcode

ESP_BLE_MESH_MODEL_OP_SCHEDULER_ACT_SET

ESP_BLE_MESH_MODEL_OP_SCHEDULER_ACT_SET_UNACK

ESP_BLE_MESH_MODEL_OP_LIGHT_LIGHTNESS_GET

ESP_BLE_MESH_MODEL_OP_LIGHT_LIGHTNESS_SET

ESP_BLE_MESH_MODEL_OP_LIGHT_LIGHTNESS_SET_UNACK

ESP_BLE_MESH_MODEL_OP_LIGHT_LIGHTNESS_STATUS

ESP_BLE_MESH_MODEL_OP_LIGHT_LIGHTNESS_LINEAR_GET

ESP_BLE_MESH_MODEL_OP_LIGHT_LIGHTNESS_LINEAR_SET

ESP_BLE_MESH_MODEL_OP_LIGHT_LIGHTNESS_LINEAR_SET_UNACK

ESP_BLE_MESH_MODEL_OP_LIGHT_LIGHTNESS_LINEAR_STATUS

ESP_BLE_MESH_MODEL_OP_LIGHT_LIGHTNESS_LAST_GET

ESP_BLE_MESH_MODEL_OP_LIGHT_LIGHTNESS_LAST_STATUS

ESP_BLE_MESH_MODEL_OP_LIGHT_LIGHTNESS_DEFAULT_GET

ESP_BLE_MESH_MODEL_OP_LIGHT_LIGHTNESS_DEFAULT_STATUS

ESP_BLE_MESH_MODEL_OP_LIGHT_LIGHTNESS_RANGE_GET

ESP_BLE_MESH_MODEL_OP_LIGHT_LIGHTNESS_RANGE_STATUS
Light Lightness Setup Message Opcode

ESP_BLE_MESH_MODEL_OP_LIGHT_LIGHTNESS_DEFAULT_SET

ESP_BLE_MESH_MODEL_OP_LIGHT_LIGHTNESS_DEFAULT_SET_UNACK

ESP_BLE_MESH_MODEL_OP_LIGHT_LIGHTNESS_RANGE_SET

ESP_BLE_MESH_MODEL_OP_LIGHT_LIGHTNESS_RANGE_SET_UNACK
Light CTL Message Opcode

ESP_BLE_MESH_MODEL_OP_LIGHT_CTL_GET

ESP_BLE_MESH_MODEL_OP_LIGHT_CTL_SET

ESP_BLE_MESH_MODEL_OP_LIGHT_CTL_SET_UNACK

ESP_BLE_MESH_MODEL_OP_LIGHT_CTL_STATUS

ESP_BLE_MESH_MODEL_OP_LIGHT_CTL_TEMPERATURE_GET

ESP_BLE_MESH_MODEL_OP_LIGHT_CTL_TEMPERATURE_RANGE_GET

ESP_BLE_MESH_MODEL_OP_LIGHT_CTL_TEMPERATURE_RANGE_STATUS

ESP_BLE_MESH_MODEL_OP_LIGHT_CTL_TEMPERATURE_SET

ESP_BLE_MESH_MODEL_OP_LIGHT_CTL_TEMPERATURE_SET_UNACK

ESP_BLE_MESH_MODEL_OP_LIGHT_CTL_TEMPERATURE_STATUS

ESP_BLE_MESH_MODEL_OP_LIGHT_CTL_DEFAULT_GET

ESP_BLE_MESH_MODEL_OP_LIGHT_CTL_DEFAULT_STATUS
Light CTL Setup Message Opcode

ESP_BLE_MESH_MODEL_OP_LIGHT_CTL_DEFAULT_SET

ESP_BLE_MESH_MODEL_OP_LIGHT_CTL_DEFAULT_SET_UNACK

ESP_BLE_MESH_MODEL_OP_LIGHT_CTL_TEMPERATURE_RANGE_SET

ESP_BLE_MESH_MODEL_OP_LIGHT_CTL_TEMPERATURE_RANGE_SET_UNACK
Light HSL Message Opcode

ESP_BLE_MESH_MODEL_OP_LIGHT_HSL_GET

ESP_BLE_MESH_MODEL_OP_LIGHT_HSL_HUE_GET

ESP_BLE_MESH_MODEL_OP_LIGHT_HSL_HUE_SET

ESP_BLE_MESH_MODEL_OP_LIGHT_HSL_HUE_SET_UNACK

ESP_BLE_MESH_MODEL_OP_LIGHT_HSL_HUE_STATUS

ESP_BLE_MESH_MODEL_OP_LIGHT_HSL_SATURATION_GET

ESP_BLE_MESH_MODEL_OP_LIGHT_HSL_SATURATION_SET

ESP_BLE_MESH_MODEL_OP_LIGHT_HSL_SATURATION_SET_UNACK

ESP_BLE_MESH_MODEL_OP_LIGHT_HSL_SATURATION_STATUS

ESP_BLE_MESH_MODEL_OP_LIGHT_HSL_SET

ESP_BLE_MESH_MODEL_OP_LIGHT_HSL_SET_UNACK

ESP_BLE_MESH_MODEL_OP_LIGHT_HSL_STATUS

ESP_BLE_MESH_MODEL_OP_LIGHT_HSL_TARGET_GET

ESP_BLE_MESH_MODEL_OP_LIGHT_HSL_TARGET_STATUS

ESP_BLE_MESH_MODEL_OP_LIGHT_HSL_DEFAULT_GET

ESP_BLE_MESH_MODEL_OP_LIGHT_HSL_DEFAULT_STATUS

ESP_BLE_MESH_MODEL_OP_LIGHT_HSL_RANGE_GET

ESP_BLE_MESH_MODEL_OP_LIGHT_HSL_RANGE_STATUS
Light HSL Setup Message Opcode

ESP_BLE_MESH_MODEL_OP_LIGHT_HSL_DEFAULT_SET

ESP_BLE_MESH_MODEL_OP_LIGHT_HSL_DEFAULT_SET_UNACK

ESP_BLE_MESH_MODEL_OP_LIGHT_HSL_RANGE_SET

ESP_BLE_MESH_MODEL_OP_LIGHT_HSL_RANGE_SET_UNACK
Light xyL Message Opcode

ESP_BLE_MESH_MODEL_OP_LIGHT_XYL_GET

ESP_BLE_MESH_MODEL_OP_LIGHT_XYL_SET

ESP_BLE_MESH_MODEL_OP_LIGHT_XYL_SET_UNACK

ESP_BLE_MESH_MODEL_OP_LIGHT_XYL_STATUS

ESP_BLE_MESH_MODEL_OP_LIGHT_XYL_TARGET_GET

ESP_BLE_MESH_MODEL_OP_LIGHT_XYL_TARGET_STATUS

ESP_BLE_MESH_MODEL_OP_LIGHT_XYL_DEFAULT_GET

ESP_BLE_MESH_MODEL_OP_LIGHT_XYL_DEFAULT_STATUS

ESP_BLE_MESH_MODEL_OP_LIGHT_XYL_RANGE_GET

ESP_BLE_MESH_MODEL_OP_LIGHT_XYL_RANGE_STATUS
Light xyL Setup Message Opcode

ESP_BLE_MESH_MODEL_OP_LIGHT_XYL_DEFAULT_SET

ESP_BLE_MESH_MODEL_OP_LIGHT_XYL_DEFAULT_SET_UNACK

ESP_BLE_MESH_MODEL_OP_LIGHT_XYL_RANGE_SET

ESP_BLE_MESH_MODEL_OP_LIGHT_XYL_RANGE_SET_UNACK
Light Control Message Opcode

ESP_BLE_MESH_MODEL_OP_LIGHT_LC_MODE_GET

ESP_BLE_MESH_MODEL_OP_LIGHT_LC_MODE_SET

ESP_BLE_MESH_MODEL_OP_LIGHT_LC_MODE_SET_UNACK

ESP_BLE_MESH_MODEL_OP_LIGHT_LC_MODE_STATUS

ESP_BLE_MESH_MODEL_OP_LIGHT_LC_OM_GET

ESP_BLE_MESH_MODEL_OP_LIGHT_LC_OM_SET

ESP_BLE_MESH_MODEL_OP_LIGHT_LC_OM_SET_UNACK

ESP_BLE_MESH_MODEL_OP_LIGHT_LC_OM_STATUS

ESP_BLE_MESH_MODEL_OP_LIGHT_LC_LIGHT_ONOFF_GET

ESP_BLE_MESH_MODEL_OP_LIGHT_LC_LIGHT_ONOFF_SET

ESP_BLE_MESH_MODEL_OP_LIGHT_LC_LIGHT_ONOFF_SET_UNACK

ESP_BLE_MESH_MODEL_OP_LIGHT_LC_LIGHT_ONOFF_STATUS

ESP_BLE_MESH_MODEL_OP_LIGHT_LC_PROPERTY_GET

ESP_BLE_MESH_MODEL_OP_LIGHT_LC_PROPERTY_SET

ESP_BLE_MESH_MODEL_OP_LIGHT_LC_PROPERTY_SET_UNACK

ESP_BLE_MESH_MODEL_OP_LIGHT_LC_PROPERTY_STATUS

ESP_BLE_MESH_MODEL_STATUS_SUCCESS

ESP_BLE_MESH_MODEL_STATUS_CANNOT_SET_RANGE_MIN

ESP_BLE_MESH_MODEL_STATUS_CANNOT_SET_RANGE_MAX

ESP_BLE_MESH_SERVER_RSP_BY_APP
Response need to be sent in the application

ESP_BLE_MESH_SERVER_AUTO_RSP
Response will be sent internally

Type Definitions

typedef uint8_t **esp_ble_mesh_octet16_t**[**ESP_BLE_MESH_OCTET16_LEN**]
Define the BLE Mesh octet 8 bytes size

typedef uint8_t **esp_ble_mesh_octet8_t**[**ESP_BLE_MESH_OCTET8_LEN**]
Invalid Company ID

typedef uint32_t **esp_ble_mesh_cb_t**

typedef uint8_t **UINT8**

typedef uint16_t **UINT16**

typedef uint32_t **UINT32**

typedef uint64_t **UINT64**

typedef *UINT8* **BT_OCTET32**[**BT_OCTET32_LEN**]

typedef uint8_t **BD_ADDR**[**BD_ADDR_LEN**]

typedef uint8_t **esp_ble_mesh_bd_addr_t**[**BD_ADDR_LEN**]

typedef uint8_t **esp_ble_mesh_addr_type_t**
BLE device address type.

typedef **struct** *esp_ble_mesh_model* **esp_ble_mesh_model_t**

typedef uint8_t **esp_ble_mesh_dev_add_flag_t**

typedef uint32_t **esp_ble_mesh_opcode_config_client_get_t**
esp_ble_mesh_opcode_config_client_get_t belongs to esp_ble_mesh_opcode_t, this typedef is only used to locate the opcodes used by esp_ble_mesh_config_client_get_state. The following opcodes will only be used in the esp_ble_mesh_config_client_get_state function.

typedef uint32_t **esp_ble_mesh_opcode_config_client_set_t**
esp_ble_mesh_opcode_config_client_set_t belongs to esp_ble_mesh_opcode_t, this typedef is only used to locate the opcodes used by esp_ble_mesh_config_client_set_state. The following opcodes will only be used in the esp_ble_mesh_config_client_set_state function.

typedef uint32_t **esp_ble_mesh_opcode_config_status_t**
esp_ble_mesh_opcode_config_status_t belongs to esp_ble_mesh_opcode_t, this typedef is only used to locate the opcodes used by the Config Model messages The following opcodes are used by the BLE Mesh Config Server Model internally to respond to the Config Client Model' s request messages.

typedef uint8_t **esp_ble_mesh_cfg_status_t**
This typedef is only used to indicate the status code contained in some of the Configuration Server Model status message.

typedef uint32_t **esp_ble_mesh_opcode_health_client_get_t**
esp_ble_mesh_opcode_health_client_get_t belongs to esp_ble_mesh_opcode_t, this typedef is only used to locate the opcodes used by esp_ble_mesh_health_client_get_state. The following opcodes will only be used in the esp_ble_mesh_health_client_get_state function.

typedef uint32_t **esp_ble_mesh_opcode_health_client_set_t**
esp_ble_mesh_opcode_health_client_set_t belongs to esp_ble_mesh_opcode_t, this typedef is only used to locate the opcodes used by esp_ble_mesh_health_client_set_state. The following opcodes will only be used in the esp_ble_mesh_health_client_set_state function.

typedef uint32_t **esp_ble_mesh_health_model_status_t**
esp_ble_mesh_health_model_status_t belongs to esp_ble_mesh_opcode_t, this typedef is only used to locate the opcodes used by the Health Model messages. The following opcodes are used by the BLE Mesh Health Server Model internally to respond to the Health Client Model' s request messages.

typedef uint32_t **esp_ble_mesh_generic_message_opcode_t**
esp_ble_mesh_generic_message_opcode_t belongs to esp_ble_mesh_opcode_t, this typedef is only used to locate the opcodes used by functions esp_ble_mesh_generic_client_get_state & esp_ble_mesh_generic_client_set_state.Generic OnOff Message Opcode

typedef uint32_t **esp_ble_mesh_sensor_message_opcode_t**
esp_ble_mesh_sensor_message_opcode_t belongs to esp_ble_mesh_opcode_t, this typedef is only used to locate the opcodes used by functions esp_ble_mesh_sensor_client_get_state & esp_ble_mesh_sensor_client_set_state.Sensor Message Opcode

typedef uint32_t **esp_ble_mesh_time_scene_message_opcode_t**
esp_ble_mesh_time_scene_message_opcode_t belongs to esp_ble_mesh_opcode_t, this typedef is only used to locate the opcodes used by functions esp_ble_mesh_time_scene_client_get_state & esp_ble_mesh_time_scene_client_set_state.Time Message Opcode

typedef uint32_t **esp_ble_mesh_light_message_opcode_t**
esp_ble_mesh_light_message_opcode_t belongs to esp_ble_mesh_opcode_t, this typedef is only used to locate the opcodes used by functions esp_ble_mesh_light_client_get_state & esp_ble_mesh_light_client_set_state.Light Lightness Message Opcode

typedef uint32_t **esp_ble_mesh_opcode_t**
End of defines of esp_ble_mesh_opcode_t

typedef uint8_t **esp_ble_mesh_model_status_t**
This typedef is only used to indicate the status code contained in some of the server models (e.g. Generic Server Model) status message.

Enumerations

enum esp_ble_mesh_cb_type_t
Values:

ESP_BLE_MESH_TYPE_PROV_CB

ESP_BLE_MESH_TYPE_OUTPUT_NUM_CB

ESP_BLE_MESH_TYPE_OUTPUT_STR_CB

ESP_BLE_MESH_TYPE_INTPUT_CB

ESP_BLE_MESH_TYPE_LINK_OPEN_CB

ESP_BLE_MESH_TYPE_LINK_CLOSE_CB

ESP_BLE_MESH_TYPE_COMPLETE_CB

ESP_BLE_MESH_TYPE_RESET_CB

enum esp_ble_mesh_oob_method_t
Values:

ESP_BLE_MESH_NO_OOB

ESP_BLE_MESH_STATIC_OOB

ESP_BLE_MESH_OUTPUT_OOB

ESP_BLE_MESH_INPUT_OOB

enum esp_ble_mesh_output_action_t
Values:

ESP_BLE_MESH_NO_OUTPUT = 0

ESP_BLE_MESH_BLINK = BIT(0)

ESP_BLE_MESH_BEEP = BIT(1)

ESP_BLE_MESH_VIBRATE = BIT(2)

ESP_BLE_MESH_DISPLAY_NUMBER = BIT(3)

ESP_BLE_MESH_DISPLAY_STRING = BIT(4)

enum esp_ble_mesh_input_action_t
Values:

ESP_BLE_MESH_NO_INPUT = 0

ESP_BLE_MESH_PUSH = BIT(0)

ESP_BLE_MESH_TWIST = BIT(1)

ESP_BLE_MESH_ENTER_NUMBER = BIT(2)

ESP_BLE_MESH_ENTER_STRING = BIT(3)

enum esp_ble_mesh_prov_bearer_t

Values:

ESP_BLE_MESH_PROV_ADV = BIT(0)

ESP_BLE_MESH_PROV_GATT = BIT(1)

enum esp_ble_mesh_prov_oob_info_t

Values:

ESP_BLE_MESH_PROV_OOB_OTHER = BIT(0)

ESP_BLE_MESH_PROV_OOB_URI = BIT(1)

ESP_BLE_MESH_PROV_OOB_2D_CODE = BIT(2)

ESP_BLE_MESH_PROV_OOB_BAR_CODE = BIT(3)

ESP_BLE_MESH_PROV_OOB_NFC = BIT(4)

ESP_BLE_MESH_PROV_OOB_NUMBER = BIT(5)

ESP_BLE_MESH_PROV_OOB_STRING = BIT(6)

ESP_BLE_MESH_PROV_OOB_ON_BOX = BIT(11)

ESP_BLE_MESH_PROV_OOB_IN_BOX = BIT(12)

ESP_BLE_MESH_PROV_OOB_ON_PAPER = BIT(13)

ESP_BLE_MESH_PROV_OOB_IN_MANUAL = BIT(14)

ESP_BLE_MESH_PROV_OOB_ON_DEV = BIT(15)

enum esp_ble_mesh_dev_role_t

Values:

ROLE_NODE = 0

ROLE_PROVISIONER

ROLE_FAST_PROV

enum esp_ble_mesh_fast_prov_action_t

Values:

FAST_PROV_ACT_NONE

FAST_PROV_ACT_ENTER

FAST_PROV_ACT_SUSPEND

FAST_PROV_ACT_EXIT

FAST_PROV_ACT_MAX

enum esp_ble_mesh_proxy_filter_type_t

Values:

PROXY_FILTER_WHITELIST

PROXY_FILTER_BLACKLIST

enum esp_ble_mesh_prov_cb_event_t

Values:

ESP_BLE_MESH_PROV_REGISTER_COMP_EVT
Initialize BLE Mesh provisioning capabilities and internal data information completion event

ESP_BLE_MESH_NODE_SET_UNPROV_DEV_NAME_COMP_EVT
Set the unprovisioned device name completion event

ESP_BLE_MESH_NODE_PROV_ENABLE_COMP_EVT
Enable node provisioning functionality completion event

ESP_BLE_MESH_NODE_PROV_DISABLE_COMP_EVT
Disable node provisioning functionality completion event

ESP_BLE_MESH_NODE_PROV_LINK_OPEN_EVT
Establish a BLE Mesh link event

ESP_BLE_MESH_NODE_PROV_LINK_CLOSE_EVT
Close a BLE Mesh link event

ESP_BLE_MESH_NODE_PROV_OOB_PUB_KEY_EVT
Generate Node input OOB public key event

ESP_BLE_MESH_NODE_PROV_OUTPUT_NUMBER_EVT
Generate Node Output Number event

ESP_BLE_MESH_NODE_PROV_OUTPUT_STRING_EVT
Generate Node Output String event

ESP_BLE_MESH_NODE_PROV_INPUT_EVT
Event requiring the user to input a number or string

ESP_BLE_MESH_NODE_PROV_COMPLETE_EVT
Provisioning done event

ESP_BLE_MESH_NODE_PROV_RESET_EVT
Provisioning reset event

ESP_BLE_MESH_NODE_PROV_SET_OOB_PUB_KEY_COMP_EVT
Node set oob public key completion event

ESP_BLE_MESH_NODE_PROV_INPUT_NUMBER_COMP_EVT
Node input number completion event

ESP_BLE_MESH_NODE_PROV_INPUT_STRING_COMP_EVT
Node input string completion event

ESP_BLE_MESH_NODE_PROXY_IDENTITY_ENABLE_COMP_EVT
Enable BLE Mesh Proxy Identity advertising completion event

ESP_BLE_MESH_NODE_PROXY_GATT_ENABLE_COMP_EVT
Enable BLE Mesh GATT Proxy Service completion event

ESP_BLE_MESH_NODE_PROXY_GATT_DISABLE_COMP_EVT
Disable BLE Mesh GATT Proxy Service completion event

ESP_BLE_MESH_NODE_ADD_LOCAL_NET_KEY_COMP_EVT
Node add NetKey locally completion event

ESP_BLE_MESH_NODE_ADD_LOCAL_APP_KEY_COMP_EVT
Node add AppKey locally completion event

ESP_BLE_MESH_NODE_BIND_APP_KEY_TO_MODEL_COMP_EVT
Node bind AppKey to model locally completion event

ESP_BLE_MESH_PROVISIONER_PROV_ENABLE_COMP_EVT
Provisioner enable provisioning functionality completion event

ESP_BLE_MESH_PROVISIONER_PROV_DISABLE_COMP_EVT
Provisioner disable provisioning functionality completion event

ESP_BLE_MESH_PROVISIONER_RECV_UNPROV_ADV_PKT_EVT
Provisioner receives unprovisioned device beacon event

ESP_BLE_MESH_PROVISIONER_PROV_READ_OOB_PUB_KEY_EVT
Provisioner read unprovisioned device OOB public key event

ESP_BLE_MESH_PROVISIONER_PROV_INPUT_EVT
Provisioner input value for provisioning procedure event

ESP_BLE_MESH_PROVISIONER_PROV_OUTPUT_EVT
Provisioner output value for provisioning procedure event

ESP_BLE_MESH_PROVISIONER_PROV_LINK_OPEN_EVT
Provisioner establish a BLE Mesh link event

ESP_BLE_MESH_PROVISIONER_PROV_LINK_CLOSE_EVT
Provisioner close a BLE Mesh link event

ESP_BLE_MESH_PROVISIONER_PROV_COMPLETE_EVT
Provisioner provisioning done event

ESP_BLE_MESH_PROVISIONER_ADD_UNPROV_DEV_COMP_EVT
Provisioner add a device to the list which contains devices that are waiting/going to be provisioned completion event

ESP_BLE_MESH_PROVISIONER_PROV_DEV_WITH_ADDR_COMP_EVT
Provisioner start to provision an unprovisioned device completion event

ESP_BLE_MESH_PROVISIONER_DELETE_DEV_COMP_EVT
Provisioner delete a device from the list, close provisioning link with the device completion event

ESP_BLE_MESH_PROVISIONER_SET_DEV_UUID_MATCH_COMP_EVT
Provisioner set the value to be compared with part of the unprovisioned device UUID completion event

ESP_BLE_MESH_PROVISIONER_SET_PROV_DATA_INFO_COMP_EVT
Provisioner set net_idx/flags/iv_index used for provisioning completion event

ESP_BLE_MESH_PROVISIONER_SET_STATIC_OOB_VALUE_COMP_EVT
Provisioner set static oob value used for provisioning completion event

ESP_BLE_MESH_PROVISIONER_SET_PRIMARY_ELEM_ADDR_COMP_EVT
Provisioner set unicast address of primary element completion event

ESP_BLE_MESH_PROVISIONER_PROV_READ_OOB_PUB_KEY_COMP_EVT
Provisioner read unprovisioned device OOB public key completion event

ESP_BLE_MESH_PROVISIONER_PROV_INPUT_NUMBER_COMP_EVT
Provisioner input number completion event

ESP_BLE_MESH_PROVISIONER_PROV_INPUT_STRING_COMP_EVT
Provisioner input string completion event

ESP_BLE_MESH_PROVISIONER_SET_NODE_NAME_COMP_EVT
Provisioner set node name completion event

ESP_BLE_MESH_PROVISIONER_ADD_LOCAL_APP_KEY_COMP_EVT
Provisioner add local app key completion event

ESP_BLE_MESH_PROVISIONER_UPDATE_LOCAL_APP_KEY_COMP_EVT
Provisioner update local app key completion event

ESP_BLE_MESH_PROVISIONER_BIND_APP_KEY_TO_MODEL_COMP_EVT
Provisioner bind local model with local app key completion event

ESP_BLE_MESH_PROVISIONER_ADD_LOCAL_NET_KEY_COMP_EVT
Provisioner add local network key completion event

ESP_BLE_MESH_PROVISIONER_UPDATE_LOCAL_NET_KEY_COMP_EVT
Provisioner update local network key completion event

ESP_BLE_MESH_PROVISIONER_STORE_NODE_COMP_DATA_COMP_EVT
Provisioner store node composition data completion event

ESP_BLE_MESH_PROVISIONER_DELETE_NODE_WITH_UUID_COMP_EVT
Provisioner delete node with uuid completion event

ESP_BLE_MESH_PROVISIONER_DELETE_NODE_WITH_ADDR_COMP_EVT
Provisioner delete node with unicast address completion event

ESP_BLE_MESH_PROVISIONER_ENABLE_HEARTBEAT_RECV_COMP_EVT
Provisioner start to receive heartbeat message completion event

ESP_BLE_MESH_PROVISIONER_SET_HEARTBEAT_FILTER_TYPE_COMP_EVT
Provisioner set the heartbeat filter type completion event

ESP_BLE_MESH_PROVISIONER_SET_HEARTBEAT_FILTER_INFO_COMP_EVT
Provisioner set the heartbeat filter information completion event

ESP_BLE_MESH_PROVISIONER_RECV_HEARTBEAT_MESSAGE_EVT
Provisioner receive heartbeat message event

ESP_BLE_MESH_PROVISIONER_DRIECT_ERASE_SETTINGS_COMP_EVT
Provisioner directly erase settings completion event

ESP_BLE_MESH_PROVISIONER_OPEN_SETTINGS_WITH_INDEX_COMP_EVT
Provisioner open settings with index completion event

ESP_BLE_MESH_PROVISIONER_OPEN_SETTINGS_WITH_UID_COMP_EVT
Provisioner open settings with user id completion event

ESP_BLE_MESH_PROVISIONER_CLOSE_SETTINGS_WITH_INDEX_COMP_EVT
Provisioner close settings with index completion event

ESP_BLE_MESH_PROVISIONER_CLOSE_SETTINGS_WITH_UID_COMP_EVT
Provisioner close settings with user id completion event

ESP_BLE_MESH_PROVISIONER_DELETE_SETTINGS_WITH_INDEX_COMP_EVT
Provisioner delete settings with index completion event

ESP_BLE_MESH_PROVISIONER_DELETE_SETTINGS_WITH_UID_COMP_EVT
Provisioner delete settings with user id completion event

ESP_BLE_MESH_SET_FAST_PROV_INFO_COMP_EVT
Set fast provisioning information (e.g. unicast address range, net_idx, etc.) completion event

ESP_BLE_MESH_SET_FAST_PROV_ACTION_COMP_EVT
Set fast provisioning action completion event

ESP_BLE_MESH_HEARTBEAT_MESSAGE_RECV_EVT
Receive Heartbeat message event

ESP_BLE_MESH_LPN_ENABLE_COMP_EVT
Enable Low Power Node completion event

ESP_BLE_MESH_LPN_DISABLE_COMP_EVT
Disable Low Power Node completion event

ESP_BLE_MESH_LPN_POLL_COMP_EVT
Low Power Node send Friend Poll completion event

ESP_BLE_MESH_LPN_FRIENDSHIP_ESTABLISH_EVT
Low Power Node establishes friendship event

ESP_BLE_MESH_LPN_FRIENDSHIP_TERMINATE_EVT
Low Power Node terminates friendship event

ESP_BLE_MESH_FRIEND_FRIENDSHIP_ESTABLISH_EVT
Friend Node establishes friendship event

ESP_BLE_MESH_FRIEND_FRIENDSHIP_TERMINATE_EVT
Friend Node terminates friendship event

ESP_BLE_MESH_PROXY_CLIENT_RECV_ADV_PKT_EVT
Proxy Client receives Network ID advertising packet event

ESP_BLE_MESH_PROXY_CLIENT_CONNECTED_EVT
Proxy Client establishes connection successfully event

ESP_BLE_MESH_PROXY_CLIENT_DISCONNECTED_EVT
Proxy Client terminates connection successfully event

ESP_BLE_MESH_PROXY_CLIENT_RECV_FILTER_STATUS_EVT
Proxy Client receives Proxy Filter Status event

ESP_BLE_MESH_PROXY_CLIENT_CONNECT_COMP_EVT
Proxy Client connect completion event

ESP_BLE_MESH_PROXY_CLIENT_DISCONNECT_COMP_EVT
Proxy Client disconnect completion event

ESP_BLE_MESH_PROXY_CLIENT_SET_FILTER_TYPE_COMP_EVT
Proxy Client set filter type completion event

ESP_BLE_MESH_PROXY_CLIENT_ADD_FILTER_ADDR_COMP_EVT
Proxy Client add filter address completion event

ESP_BLE_MESH_PROXY_CLIENT_REMOVE_FILTER_ADDR_COMP_EVT
Proxy Client remove filter address completion event

ESP_BLE_MESH_PROXY_SERVER_CONNECTED_EVT
Proxy Server establishes connection successfully event

ESP_BLE_MESH_PROXY_SERVER_DISCONNECTED_EVT
Proxy Server terminates connection successfully event

ESP_BLE_MESH_MODEL_SUBSCRIBE_GROUP_ADDR_COMP_EVT
Local model subscribes group address completion event

ESP_BLE_MESH_MODEL_UNSUBSCRIBE_GROUP_ADDR_COMP_EVT
Local model unsubscribes group address completion event

ESP_BLE_MESH_DEINIT_MESH_COMP_EVT
De-initialize BLE Mesh stack completion event

ESP_BLE_MESH_PROV_EVT_MAX

enum [anonymous]
BLE Mesh server models related definitions.

This enum value is the flag of transition timer operation

Values:

ESP_BLE_MESH_SERVER_TRANS_TIMER_START

ESP_BLE_MESH_SERVER_FLAG_MAX

enum esp_ble_mesh_server_state_type_t
This enum value is the type of server model states

Values:

ESP_BLE_MESH_GENERIC_ONOFF_STATE

ESP_BLE_MESH_GENERIC_LEVEL_STATE

ESP_BLE_MESH_GENERIC_ONPOWERUP_STATE

ESP_BLE_MESH_GENERIC_POWER_ACTUAL_STATE

ESP_BLE_MESH_LIGHT_LIGHTNESS_ACTUAL_STATE

ESP_BLE_MESH_LIGHT_LIGHTNESS_LINEAR_STATE

ESP_BLE_MESH_LIGHT_CTL_LIGHTNESS_STATE

ESP_BLE_MESH_LIGHT_CTL_TEMP_DELTA_UV_STATE

ESP_BLE_MESH_LIGHT_HSL_STATE

ESP_BLE_MESH_LIGHT_HSL_LIGHTNESS_STATE

ESP_BLE_MESH_LIGHT_HSL_HUE_STATE

ESP_BLE_MESH_LIGHT_HSL_SATURATION_STATE

ESP_BLE_MESH_LIGHT_XYL_LIGHTNESS_STATE

ESP_BLE_MESH_LIGHT_LC_LIGHT_ONOFF_STATE

ESP_BLE_MESH_SERVER_MODEL_STATE_MAX

enum esp_ble_mesh_model_cb_event_t

Values:

ESP_BLE_MESH_MODEL_OPERATION_EVT
User-defined models receive messages from peer devices (e.g. get, set, status, etc) event

ESP_BLE_MESH_MODEL_SEND_COMP_EVT
User-defined models send messages completion event

ESP_BLE_MESH_MODEL_PUBLISH_COMP_EVT
User-defined models publish messages completion event

ESP_BLE_MESH_CLIENT_MODEL_RECV_PUBLISH_MSG_EVT
User-defined client models receive publish messages event

ESP_BLE_MESH_CLIENT_MODEL_SEND_TIMEOUT_EVT
Timeout event for the user-defined client models that failed to receive response from peer server models

ESP_BLE_MESH_MODEL_PUBLISH_UPDATE_EVT
When a model is configured to publish messages periodically, this event will occur during every publish period

ESP_BLE_MESH_SERVER_MODEL_UPDATE_STATE_COMP_EVT
Server models update state value completion event

ESP_BLE_MESH_MODEL_EVT_MAX

ESP-BLE-MESH Core API Reference

This section contains ESP-BLE-MESH Core related APIs, which can be used to initialize ESP-BLE-MESH stack, provision, send/publish messages, etc.

This API reference covers six components:

- *ESP-BLE-MESH Stack Initialization*
- *Reading of Local Data Information*
- *Low Power Operation (Updating)*
- *Send/Publish Messages, add Local AppKey, etc.*
- *ESP-BLE-MESH Node/Provisioner Provisioning*
- *ESP-BLE-MESH GATT Proxy Server*

ESP-BLE-MESH Stack Initialization

Header File

- bt/esp_ble_mesh/api/core/include/esp_ble_mesh_common_api.h

Functions

esp_err_t **esp_ble_mesh_init** (*esp_ble_mesh_prov_t* *prov, *esp_ble_mesh_comp_t* *comp)

Initialize BLE Mesh module. This API initializes provisioning capabilities and composition data information.

Note After calling this API, the device needs to call esp_ble_mesh_prov_enable() to enable provisioning functionality again.

Return ESP_OK on success or error code otherwise.

Parameters

- `[in] prov`: Pointer to the device provisioning capabilities. This pointer must remain valid during the lifetime of the BLE Mesh device.
- `[in] comp`: Pointer to the device composition data information. This pointer must remain valid during the lifetime of the BLE Mesh device.

esp_err_t **esp_ble_mesh_deinit** (*esp_ble_mesh_deinit_param_t* *param)

De-initialize BLE Mesh module.

Note This function shall be invoked after esp_ble_mesh_client_model_deinit().

Return ESP_OK on success or error code otherwise.

Parameters

- `[in] param`: Pointer to the structure of BLE Mesh deinit parameters.

Reading of Local Data Information

Header File

- bt/esp_ble_mesh/api/core/include/esp_ble_mesh_local_data_operation_api.h

Functions

int32_t **esp_ble_mesh_get_model_publish_period** (*esp_ble_mesh_model_t* *model)

Get the model publish period, the unit is ms.

Return Publish period value on success, 0 or (negative) error code from errno.h on failure.

Parameters

- `[in] model`: Model instance pointer.

uint16_t **esp_ble_mesh_get_primary_element_address** (void)

Get the address of the primary element.

Return Address of the primary element on success, or ESP_BLE_MESH_ADDR_UNASSIGNED on failure which means the device has not been provisioned.

uint16_t ***esp_ble_mesh_is_model_subscribed_to_group*** (*esp_ble_mesh_model_t* *model, uint16_t *group_addr*)

Check if the model has subscribed to the given group address. Note: E.g., once a status message is received and the destination address is a group address, the model uses this API to check if it is successfully subscribed to the given group address.

Return Pointer to the group address within the Subscription List of the model on success, or NULL on failure which means the model has not subscribed to the given group address. Note: With the pointer to the group address returned, you can reset the group address to 0x0000 in order to unsubscribe the model from the group.

Parameters

- `[in] model`: Pointer to the model.
- `[in] group_addr`: Group address.

esp_ble_mesh_elem_t ***esp_ble_mesh_find_element*** (uint16_t *element_addr*)

Find the BLE Mesh element pointer via the element address.

Return Pointer to the element on success, or NULL on failure.

Parameters

- `[in] element_addr`: Element address.

uint8_t **esp_ble_mesh_get_element_count**(void)
Get the number of elements that have been registered.

Return Number of elements.

esp_ble_mesh_model_t ***esp_ble_mesh_find_vendor_model**(**const** *esp_ble_mesh_elem_t* **element*, uint16_t *company_id*, uint16_t *model_id*)
Find the Vendor specific model with the given element, the company ID and the Vendor Model ID.

Return Pointer to the Vendor Model on success, or NULL on failure which means the Vendor Model is not found.
Parameters
- `[in] element`: Element to which the model belongs.
- `[in] company_id`: A 16-bit company identifier assigned by the Bluetooth SIG.
- `[in] model_id`: A 16-bit vendor-assigned model identifier.

esp_ble_mesh_model_t ***esp_ble_mesh_find_sig_model**(**const** *esp_ble_mesh_elem_t* **element*, uint16_t *model_id*)
Find the SIG model with the given element and Model id.

Return Pointer to the SIG Model on success, or NULL on failure which means the SIG Model is not found.
Parameters
- `[in] element`: Element to which the model belongs.
- `[in] model_id`: SIG model identifier.

const *esp_ble_mesh_comp_t* ***esp_ble_mesh_get_composition_data**(void)
Get the Composition data which has been registered.

Return Pointer to the Composition data on success, or NULL on failure which means the Composition data is not initialized.

esp_err_t **esp_ble_mesh_model_subscribe_group_addr**(uint16_t *element_addr*, uint16_t *company_id*, uint16_t *model_id*, uint16_t *group_addr*)
A local model of node or Provisioner subscribes a group address.

Note This function shall not be invoked before node is provisioned or Provisioner is enabled.
Return ESP_OK on success or error code otherwise.
Parameters
- `[in] element_addr`: Unicast address of the element to which the model belongs.
- `[in] company_id`: A 16-bit company identifier.
- `[in] model_id`: A 16-bit model identifier.
- `[in] group_addr`: The group address to be subscribed.

esp_err_t **esp_ble_mesh_model_unsubscribe_group_addr**(uint16_t *element_addr*, uint16_t *company_id*, uint16_t *model_id*, uint16_t *group_addr*)
A local model of node or Provisioner unsubscribes a group address.

Note This function shall not be invoked before node is provisioned or Provisioner is enabled.
Return ESP_OK on success or error code otherwise.
Parameters
- `[in] element_addr`: Unicast address of the element to which the model belongs.
- `[in] company_id`: A 16-bit company identifier.
- `[in] model_id`: A 16-bit model identifier.
- `[in] group_addr`: The subscribed group address.

const uint8_t ***esp_ble_mesh_node_get_local_net_key**(uint16_t *net_idx*)
This function is called by Node to get the local NetKey.

Return NetKey on success, or NULL on failure.
Parameters
- `[in] net_idx`: NetKey index.

const uint8_t ***esp_ble_mesh_node_get_local_app_key**(uint16_t *app_idx*)

This function is called by Node to get the local AppKey.

Return AppKey on success, or NULL on failure.

Parameters

- `[in] app_idx`: AppKey index.

esp_err_t **esp_ble_mesh_node_add_local_net_key**(**const** uint8_t *net_key*[16], uint16_t *net_idx*)

This function is called by Node to add a local NetKey.

Note This function can only be called after the device is provisioned.

Return ESP_OK on success or error code otherwise.

Parameters

- `[in] net_key`: NetKey to be added.
- `[in] net_idx`: NetKey Index.

esp_err_t **esp_ble_mesh_node_add_local_app_key**(**const** uint8_t *app_key*[16], uint16_t *net_idx*, uint16_t *app_idx*)

This function is called by Node to add a local AppKey.

Note The net_idx must be an existing one. This function can only be called after the device is provisioned.

Return ESP_OK on success or error code otherwise.

Parameters

- `[in] app_key`: AppKey to be added.
- `[in] net_idx`: NetKey Index.
- `[in] app_idx`: AppKey Index.

esp_err_t **esp_ble_mesh_node_bind_app_key_to_local_model**(uint16_t *element_addr*, uint16_t *company_id*, uint16_t *model_id*, uint16_t *app_idx*)

This function is called by Node to bind AppKey to model locally.

Note If going to bind app_key with local vendor model, the company_id shall be set to 0xFFFF. This function can only be called after the device is provisioned.

Return ESP_OK on success or error code otherwise.

Parameters

- `[in] element_addr`: Node local element address
- `[in] company_id`: Node local company id
- `[in] model_id`: Node local model id
- `[in] app_idx`: Node local appkey index

Low Power Operation (Updating)

Header File

- bt/esp_ble_mesh/api/core/include/esp_ble_mesh_low_power_api.h

Functions

esp_err_t **esp_ble_mesh_lpn_enable**(void)

Enable BLE Mesh device LPN functionality.

Note This API enables LPN functionality. Once called, the proper Friend Request will be sent.

Return ESP_OK on success or error code otherwise.

esp_err_t **esp_ble_mesh_lpn_disable**(bool *force*)

Disable BLE Mesh device LPN functionality.

Return ESP_OK on success or error code otherwise.

Parameters

- `[in] force`: when disabling LPN functionality, use this flag to indicate whether directly clear corresponding information or just send friend clear to disable it if friendship has already been established.

esp_err_t **esp_ble_mesh_lpn_poll**(void)

LPN tries to poll messages from the Friend Node.

Note The Friend Poll message is sent by a Low Power node to ask the Friend node to send a message that it has stored for the Low Power node. Users can call this API to send Friend Poll message manually. If this API is not invoked, the bottom layer of the Low Power node will send Friend Poll before the PollTimeout timer expires. If the corresponding Friend Update is received and MD is set to 0, which means there are no messages for the Low Power node, then the Low Power node will stop scanning.

Return ESP_OK on success or error code otherwise.

Send/Publish Messages, add Local AppKey, etc.

Header File

- bt/esp_ble_mesh/api/core/include/esp_ble_mesh_networking_api.h

Functions

esp_err_t **esp_ble_mesh_register_custom_model_callback**(*esp_ble_mesh_model_cb_t callback*)

Register BLE Mesh callback for user-defined models' operations. This callback can report the following events generated for the user-defined models:

- Call back the messages received by user-defined client and server models to the application layer;
- If users call esp_ble_mesh_server/client_model_send, this callback notifies the application layer of the send_complete event;
- If user-defined client model sends a message that requires response, and the response message is received after the timer expires, the response message will be reported to the application layer as published by a peer device;
- If the user-defined client model fails to receive the response message during a specified period of time, a timeout event will be reported to the application layer.

Note The client models (i.e. Config Client model, Health Client model, Generic Client models, Sensor Client model, Scene Client model and Lighting Client models) that have been realized internally have their specific register functions. For example, esp_ble_mesh_register_config_client_callback is the register function for Config Client Model.

Return ESP_OK on success or error code otherwise.

Parameters

- `[in] callback`: Pointer to the callback function.

esp_err_t **esp_ble_mesh_model_msg_opcode_init**(uint8_t **data*, uint32_t *opcode*)

Add the message opcode to the beginning of the model message before sending or publishing the model message.

Note This API is only used to set the opcode of the message.

Return ESP_OK on success or error code otherwise.

Parameters

- `[in] data`: Pointer to the message data.
- `[in] opcode`: The message opcode.

esp_err_t **esp_ble_mesh_client_model_init**(*esp_ble_mesh_model_t* **model*)

Initialize the user-defined client model. All user-defined client models shall call this function to initialize the client model internal data. Node: Before calling this API, the op_pair_size and op_pair variabled within the user_data(defined using esp_ble_mesh_client_t_) of the client model need to be initialized.

Return ESP_OK on success or error code otherwise.

Parameters

- `[in] model`: BLE Mesh Client model to which the message belongs.

esp_err_t **esp_ble_mesh_client_model_deinit**(*esp_ble_mesh_model_t* *model)

De-initialize the user-defined client model.

Note This function shall be invoked before esp_ble_mesh_deinit() is called.

Return ESP_OK on success or error code otherwise.

Parameters

- `[in] model`: Pointer of the Client model.

esp_err_t **esp_ble_mesh_server_model_send_msg**(*esp_ble_mesh_model_t* *model, *esp_ble_mesh_msg_ctx_t* *ctx, uint32_t *opcode*, uint16_t *length*, uint8_t *data)

Send server model messages(such as server model status messages).

Return ESP_OK on success or error code otherwise.

Parameters

- `[in] model`: BLE Mesh Server Model to which the message belongs.
- `[in] ctx`: Message context, includes keys, TTL, etc.
- `[in] opcode`: Message opcode.
- `[in] length`: Message length (exclude the message opcode).
- `[in] data`: Parameters of Access Payload (exclude the message opcode) to be sent.

esp_err_t **esp_ble_mesh_client_model_send_msg**(*esp_ble_mesh_model_t* *model, *esp_ble_mesh_msg_ctx_t* *ctx, uint32_t *opcode*, uint16_t *length*, uint8_t *data*, int32_t *msg_timeout*, bool *need_rsp*, *esp_ble_mesh_dev_role_t* *device_role*)

Send client model message (such as model get, set, etc).

Return ESP_OK on success or error code otherwise.

Parameters

- `[in] model`: BLE Mesh Client Model to which the message belongs.
- `[in] ctx`: Message context, includes keys, TTL, etc.
- `[in] opcode`: Message opcode.
- `[in] length`: Message length (exclude the message opcode).
- `[in] data`: Parameters of the Access Payload (exclude the message opcode) to be sent.
- `[in] msg_timeout`: Time to get response to the message (in milliseconds).
- `[in] need_rsp`: TRUE if the opcode requires the peer device to reply, FALSE otherwise.
- `[in] device_role`: Role of the device (Node/Provisioner) that sends the message.

esp_err_t **esp_ble_mesh_model_publish**(*esp_ble_mesh_model_t* *model, uint32_t *opcode*, uint16_t *length*, uint8_t *data*, *esp_ble_mesh_dev_role_t* *device_role*)

Send a model publication message.

Note Before calling this function, the user needs to ensure that the model publication message (*esp_ble_mesh_model_pub_t::msg*) contains a valid message to be sent. And if users want to update the publishing message, this API should be called in ESP_BLE_MESH_MODEL_PUBLISH_UPDATE_EVT with the message updated.

Return ESP_OK on success or error code otherwise.

Parameters

- `[in] model`: Mesh (client) Model publishing the message.
- `[in] opcode`: Message opcode.
- `[in] length`: Message length (exclude the message opcode).
- `[in] data`: Parameters of the Access Payload (exclude the message opcode) to be sent.
- `[in] device_role`: Role of the device (node/provisioner) publishing the message of the type esp_ble_mesh_dev_role_t.

esp_err_t **esp_ble_mesh_server_model_update_state**(*esp_ble_mesh_model_t* *model, *esp_ble_mesh_server_state_type_t* *type*, *esp_ble_mesh_server_state_value_t* *value*)

Update a server model state value. If the model publication state is set properly (e.g. publish address is set to a valid address), it will publish corresponding status message.

Note Currently this API is used to update bound state value, not for all server model states.
Return ESP_OK on success or error code otherwise.
Parameters
- `[in] model`: Server model which is going to update the state.
- `[in] type`: Server model state type.
- `[in] value`: Server model state value.

esp_err_t **esp_ble_mesh_node_local_reset**(void)
Reset the provisioning procedure of the local BLE Mesh node.

Note All provisioning information in this node will be deleted and the node needs to be reprovisioned. The API function esp_ble_mesh_node_prov_enable() needs to be called to start a new provisioning procedure.
Return ESP_OK on success or error code otherwise.

esp_err_t **esp_ble_mesh_provisioner_set_node_name**(uint16_t *index*, **const** char **name*)
This function is called to set the node (provisioned device) name.

Note index is obtained from the parameters of ESP_BLE_MESH_PROVISIONER_PROV_COMPLETE_EVT.
Return ESP_OK on success or error code otherwise.
Parameters
- `[in] index`: Index of the node in the node queue.
- `[in] name`: Name (end by '\0') to be set for the node.

const char ***esp_ble_mesh_provisioner_get_node_name**(uint16_t *index*)
This function is called to get the node (provisioned device) name.

Note index is obtained from the parameters of ESP_BLE_MESH_PROVISIONER_PROV_COMPLETE_EVT.
Return Node name on success, or NULL on failure.
Parameters
- `[in] index`: Index of the node in the node queue.

uint16_t **esp_ble_mesh_provisioner_get_node_index**(**const** char **name*)
This function is called to get the node (provisioned device) index.

Return Node index on success, or an invalid value (0xFFFF) on failure.
Parameters
- `[in] name`: Name of the node (end by '\0').

esp_err_t **esp_ble_mesh_provisioner_store_node_comp_data**(uint16_t *unicast_addr*, uint8_t **data*, uint16_t *length*)
This function is called to store the Composition Data of the node.

Return ESP_OK on success or error code otherwise.
Parameters
- `[in] unicast_addr`: Element address of the node
- `[in] data`: Pointer of Composition Data
- `[in] length`: Length of Composition Data

esp_ble_mesh_node_t ***esp_ble_mesh_provisioner_get_node_with_uuid**(**const** uint8_t *uuid*[16])
This function is called to get the provisioned node information with the node device uuid.

Return Pointer of the node info struct or NULL on failure.
Parameters
- `[in] uuid`: Device UUID of the node

esp_ble_mesh_node_t ***esp_ble_mesh_provisioner_get_node_with_addr**(uint16_t *unicast_addr*)
This function is called to get the provisioned node information with the node unicast address.

Return Pointer of the node info struct or NULL on failure.
Parameters
- `[in] unicast_addr`: Unicast address of the node

esp_ble_mesh_node_t ***esp_ble_mesh_provisioner_get_node_with_name**(**const** char **name*)

This function is called to get the provisioned node information with the node name.

Return Pointer of the node info struct or NULL on failure.

Parameters

- `[in] name`: Name of the node (end by '\0').

uint16_t **esp_ble_mesh_provisioner_get_prov_node_count**(void)

This function is called by Provisioner to get provisioned node count.

Return Number of the provisioned nodes.

const *esp_ble_mesh_node_t* ****esp_ble_mesh_provisioner_get_node_table_entry**(void)

This function is called by Provisioner to get the entry of the node table.

Note After invoking the function to get the entry of nodes, users can use the "for" loop combined with the macro CONFIG_BLE_MESH_MAX_PROV_NODES to get each node's information. Before trying to read the node's information, users need to check if the node exists, i.e. if the *(*esp_ble_mesh_node_t* **node) is NULL. For example: "" const *esp_ble_mesh_node_t* **entry = esp_ble_mesh_provisioner_get_node_table_entry(); for (int i = 0; i < CONFIG_BLE_MESH_MAX_PROV_NODES; i++) { const *esp_ble_mesh_node_t* *node = entry[i]; if (node) { ……} } ""

Return Pointer to the start of the node table.

esp_err_t **esp_ble_mesh_provisioner_delete_node_with_uuid**(**const** uint8_t *uuid*[16])

This function is called to delete the provisioned node information with the node device uuid.

Return ESP_OK on success or error code otherwise.

Parameters

- `[in] uuid`: Device UUID of the node

esp_err_t **esp_ble_mesh_provisioner_delete_node_with_addr**(uint16_t *unicast_addr*)

This function is called to delete the provisioned node information with the node unicast address.

Return ESP_OK on success or error code otherwise.

Parameters

- `[in] unicast_addr`: Unicast address of the node

esp_err_t **esp_ble_mesh_provisioner_add_local_app_key**(**const** uint8_t *app_key*[16], uint16_t *net_idx*, uint16_t *app_idx*)

This function is called to add a local AppKey for Provisioner.

Note app_key: If set to NULL, app_key will be generated internally. net_idx: Should be an existing one. app_idx: If it is going to be generated internally, it should be set to 0xFFFF, and the new app_idx will be reported via an event.

Return ESP_OK on success or error code otherwise.

Parameters

- `[in] app_key`: The app key to be set for the local BLE Mesh stack.
- `[in] net_idx`: The network key index.
- `[in] app_idx`: The app key index.

esp_err_t **esp_ble_mesh_provisioner_update_local_app_key**(**const** uint8_t *app_key*[16], uint16_t *net_idx*, uint16_t *app_idx*)

This function is used to update a local AppKey for Provisioner.

Return ESP_OK on success or error code otherwise.

Parameters

- `[in] app_key`: Value of the AppKey.
- `[in] net_idx`: Corresponding NetKey Index.
- `[in] app_idx`: The AppKey Index

const uint8_t ***esp_ble_mesh_provisioner_get_local_app_key**(uint16_t *net_idx*, uint16_t *app_idx*)

This function is called by Provisioner to get the local app key value.

Return App key on success, or NULL on failure.

Parameters

- `[in] net_idx`: Network key index.
- `[in] app_idx`: Application key index.

esp_err_t **esp_ble_mesh_provisioner_bind_app_key_to_local_model**(uint16_t *element_addr*, uint16_t *app_idx*, uint16_t *model_id*, uint16_t *company_id*)

This function is called by Provisioner to bind own model with proper app key.

Note company_id: If going to bind app_key with local vendor model, company_id should be set to 0xFFFF.

Return ESP_OK on success or error code otherwise.

Parameters

- `[in] element_addr`: Provisioner local element address
- `[in] app_idx`: Provisioner local appkey index
- `[in] model_id`: Provisioner local model id
- `[in] company_id`: Provisioner local company id

esp_err_t **esp_ble_mesh_provisioner_add_local_net_key**(**const** uint8_t *net_key*[16], uint16_t *net_idx*)

This function is called by Provisioner to add local network key.

Note net_key: If set to NULL, net_key will be generated internally. net_idx: If it is going to be generated internally, it should be set to 0xFFFF, and the new net_idx will be reported via an event.

Return ESP_OK on success or error code otherwise.

Parameters

- `[in] net_key`: The network key to be added to the Provisioner local BLE Mesh stack.
- `[in] net_idx`: The network key index.

esp_err_t **esp_ble_mesh_provisioner_update_local_net_key**(**const** uint8_t *net_key*[16], uint16_t *net_idx*)

This function is called by Provisioner to update a local network key.

Return ESP_OK on success or error code otherwise.

Parameters

- `[in] net_key`: Value of the NetKey.
- `[in] net_idx`: The NetKey Index.

const uint8_t ***esp_ble_mesh_provisioner_get_local_net_key**(uint16_t *net_idx*)

This function is called by Provisioner to get the local network key value.

Return Network key on success, or NULL on failure.

Parameters

- `[in] net_idx`: Network key index.

esp_err_t **esp_ble_mesh_provisioner_recv_heartbeat**(bool *enable*)

This function is called by Provisioner to enable or disable receiving heartbeat messages.

Note If enabling receiving heartbeat message successfully, the filter will be an empty rejectlist by default, which means all heartbeat messages received by the Provisioner will be reported to the application layer.

Return ESP_OK on success or error code otherwise.

Parameters

- `[in] enable`: Enable or disable receiving heartbeat messages.

esp_err_t **esp_ble_mesh_provisioner_set_heartbeat_filter_type**(uint8_t *type*)

This function is called by Provisioner to set the heartbeat filter type.

Note 1. If the filter type is not the same with the current value, then all the filter entries will be cleaned.
1. If the previous type is rejectlist, and changed to acceptlist, then the filter will be an empty acceptlist, which means no heartbeat messages will be reported. Users need to add SRC or DST into the filter entry, then heartbeat messages from the SRC or to the DST will be reported.

Return ESP_OK on success or error code otherwise.
Parameters
- `[in] type`: Heartbeat filter type (acceptlist or rejectlist).

esp_err_t **esp_ble_mesh_provisioner_set_heartbeat_filter_info**(uint8_t *op*, *esp_ble_mesh_heartbeat_filter_info_t* **info*)

This function is called by Provisioner to add or remove a heartbeat filter entry.

1. If the operation is "REMOVE", the "hb_src" can be set to the SRC (can only be a unicast address) of heartbeat messages, and the "hb_dst" can be set to the DST (unicast address or group address), at least one of them needs to be set.
   - The filter entry with the same SRC or DST will be removed.

Note 1. If the operation is "ADD", the "hb_src" can be set to the SRC (can only be a unicast address) of heartbeat messages, and the "hb_dst" can be set to the DST (unicast address or group address), at least one of them needs to be set.
- If only one of them is set, the filter entry will only use the configured SRC or DST to filter heartbeat messages.
- If both of them are set, the SRC and DST will both be used to decide if a heartbeat message will be handled.
- If SRC or DST already exists in some filter entry, then the corresponding entry will be cleaned firstly, then a new entry will be allocated to store the information.

Return ESP_OK on success or error code otherwise.
Parameters
- `[in] op`: Add or REMOVE
- `[in] info`: Heartbeat filter entry information, including: hb_src - Heartbeat source address; hb_dst - Heartbeat destination address;

esp_err_t **esp_ble_mesh_provisioner_direct_erase_settings**(void)

This function is called by Provisioner to directly erase the mesh information from nvs namespace.

Note This function can be invoked when the mesh stack is not initialized or has been de-initialized.
Return ESP_OK on success or error code otherwise.

esp_err_t **esp_ble_mesh_provisioner_open_settings_with_index**(uint8_t *index*)

This function is called by Provisioner to open a nvs namespace for storing mesh information.

Note Before open another nvs namespace, the previously opened nvs namespace must be closed firstly.
Return ESP_OK on success or error code otherwise.
Parameters
- `[in] index`: Settings index.

esp_err_t **esp_ble_mesh_provisioner_open_settings_with_uid**(**const** char **uid*)

This function is called by Provisioner to open a nvs namespace for storing mesh information.

Note Before open another nvs namespace, the previously opened nvs namespace must be closed firstly.
Return ESP_OK on success or error code otherwise.
Parameters
- `[in] uid`: Settings user id.

esp_err_t **esp_ble_mesh_provisioner_close_settings_with_index**(uint8_t *index*, bool *erase*)

This function is called by Provisioner to close a nvs namespace which is opened previously for storing mesh information.

Note 1. Before closing the nvs namespace, it must be open.
1. When the function is invoked, the Provisioner functionality will be disabled firstly, and: a) If the "erase" flag is set to false, the mesh information will be cleaned (e.g. removing NetKey, AppKey,

nodes, etc) from the mesh stack. b) If the "erase" flag is set to true, the mesh information stored in the nvs namespace will also be erased besides been cleaned from the mesh stack.
2. If Provisioner tries to work properly again, we can invoke the open function to open a new nvs namespace or a previously added one, and restore the mesh information from it if not erased.
3. The working process shall be as following: a) Open settings A b) Start to provision and control nodes c) Close settings A d) Open settings B e) Start to provision and control other nodes f) Close settings B g) ……

Return ESP_OK on success or error code otherwise.

Parameters

- `[in] index`: Settings index.
- `[in] erase`: Indicate if erasing mesh information.

esp_err_t **esp_ble_mesh_provisioner_close_settings_with_uid**(**const** char *_uid_, bool _erase_)

This function is called by Provisioner to close a nvs namespace which is opened previously for storing mesh information.

Note 1. Before closing the nvs namespace, it must be open.
1. When the function is invoked, the Provisioner functionality will be disabled firstly, and: a) If the "erase" flag is set to false, the mesh information will be cleaned (e.g. removing NetKey, AppKey, nodes, etc) from the mesh stack. b) If the "erase" flag is set to true, the mesh information stored in the nvs namespace will also be erased besides been cleaned from the mesh stack.
2. If Provisioner tries to work properly again, we can invoke the open function to open a new nvs namespace or a previously added one, and restore the mesh information from it if not erased.
3. The working process shall be as following: a) Open settings A b) Start to provision and control nodes c) Close settings A d) Open settings B e) Start to provision and control other nodes f) Close settings B g) ……

Return ESP_OK on success or error code otherwise.

Parameters

- `[in] uid`: Settings user id.
- `[in] erase`: Indicate if erasing mesh information.

esp_err_t **esp_ble_mesh_provisioner_delete_settings_with_index**(uint8_t _index_)

This function is called by Provisioner to erase the mesh information and settings user id from a nvs namespace.

Note When this function is called, the nvs namespace must not be open. This function is used to erase the mesh information and settings user id which are not used currently.

Return ESP_OK on success or error code otherwise.

Parameters

- `[in] index`: Settings index.

esp_err_t **esp_ble_mesh_provisioner_delete_settings_with_uid**(**const** char *_uid_)

This function is called by Provisioner to erase the mesh information and settings user id from a nvs namespace.

Note When this function is called, the nvs namespace must not be open. This function is used to erase the mesh information and settings user id which are not used currently.

Return ESP_OK on success or error code otherwise.

Parameters

- `[in] uid`: Settings user id.

const char ***esp_ble_mesh_provisioner_get_settings_uid**(uint8_t _index_)

This function is called by Provisioner to get settings user id.

Return Setting user id on success or NULL on failure.

Parameters

- `[in] index`: Settings index.

uint8_t **esp_ble_mesh_provisioner_get_settings_index**(**const** char *_uid_)

This function is called by Provisioner to get settings index.

Return Settings index.

Parameters

- `[in] uid`: Settings user id.

uint8_t **esp_ble_mesh_provisioner_get_free_settings_count**(void)
This function is called by Provisioner to get the number of free settings user id.

Return Number of free settings user id.

const uint8_t ***esp_ble_mesh_get_fast_prov_app_key**(uint16_t *net_idx*, uint16_t *app_idx*)
This function is called to get fast provisioning application key.

Return Application key on success, or NULL on failure.
Parameters
- `[in] net_idx`: Network key index.
- `[in] app_idx`: Application key index.

Type Definitions

typedef void (***esp_ble_mesh_model_cb_t**)(*esp_ble_mesh_model_cb_event_t* event, *esp_ble_mesh_model_cb_param_t* *param)
: event, event code of user-defined model events; param, parameters of user-defined model events

ESP-BLE-MESH Node/Provisioner Provisioning

Header File

- bt/esp_ble_mesh/api/core/include/esp_ble_mesh_provisioning_api.h

Functions

esp_err_t **esp_ble_mesh_register_prov_callback**(*esp_ble_mesh_prov_cb_t callback*)
Register BLE Mesh provisioning callback.

Return ESP_OK on success or error code otherwise.
Parameters
- `[in] callback`: Pointer to the callback function.

bool **esp_ble_mesh_node_is_provisioned**(void)
Check if a device has been provisioned.

Return TRUE if the device is provisioned, FALSE if the device is unprovisioned.

esp_err_t **esp_ble_mesh_node_prov_enable**(*esp_ble_mesh_prov_bearer_t bearers*)
Enable specific provisioning bearers to get the device ready for provisioning.

Note PB-ADV: send unprovisioned device beacon. PB-GATT: send connectable advertising packets.
Return ESP_OK on success or error code otherwise.
Parameters
- `bearers`: Bit-wise OR of provisioning bearers.

esp_err_t **esp_ble_mesh_node_prov_disable**(*esp_ble_mesh_prov_bearer_t bearers*)
Disable specific provisioning bearers to make a device inaccessible for provisioning.

Return ESP_OK on success or error code otherwise.
Parameters
- `bearers`: Bit-wise OR of provisioning bearers.

esp_err_t **esp_ble_mesh_node_set_oob_pub_key**(uint8_t *pub_key_x*[32], uint8_t *pub_key_y*[32], uint8_t *private_key*[32])
Unprovisioned device set own oob public key & private key pair.

Note In order to avoid suffering brute-forcing attack (CVE-2020-26559). The Bluetooth SIG recommends that potentially vulnerable mesh provisioners use an out-of-band mechanism to exchange the public keys. So as an unprovisioned device, it should use this function to input the Public Key exchanged through the out-of-band mechanism.
Return ESP_OK on success or error code otherwise.
Parameters
- `[in] pub_key_x`: Unprovisioned device’ s Public Key X

- [in] pub_key_y: Unprovisioned device's Public Key Y
- [in] private_key: Unprovisioned device's Private Key

esp_err_t **esp_ble_mesh_node_input_number**(uint32_t *number*)

Provide provisioning input OOB number.

Note This is intended to be called if the user has received ESP_BLE_MESH_NODE_PROV_INPUT_EVT with ESP_BLE_MESH_ENTER_NUMBER as the action.

Return ESP_OK on success or error code otherwise.

Parameters

- [in] number: Number input by device.

esp_err_t **esp_ble_mesh_node_input_string**(**const** char **string*)

Provide provisioning input OOB string.

Note This is intended to be called if the user has received ESP_BLE_MESH_NODE_PROV_INPUT_EVT with ESP_BLE_MESH_ENTER_STRING as the action.

Return ESP_OK on success or error code otherwise.

Parameters

- [in] string: String input by device.

esp_err_t **esp_ble_mesh_set_unprovisioned_device_name**(**const** char **name*)

Using this function, an unprovisioned device can set its own device name, which will be broadcasted in its advertising data.

Note This API applicable to PB-GATT mode only by setting the name to the scan response data, it doesn't apply to PB-ADV mode.

Return ESP_OK on success or error code otherwise.

Parameters

- [in] name: Unprovisioned device name

esp_err_t **esp_ble_mesh_provisioner_read_oob_pub_key**(uint8_t *link_idx*, uint8_t *pub_key_x*[32], uint8_t *pub_key_y*[32])

Provisioner inputs unprovisioned device's oob public key.

Note In order to avoid suffering brute-forcing attack (CVE-2020-26559). The Bluetooth SIG recommends that potentially vulnerable mesh provisioners use an out-of-band mechanism to exchange the public keys.

Return ESP_OK on success or error code otherwise.

Parameters

- [in] link_idx: The provisioning link index
- [in] pub_key_x: Unprovisioned device's Public Key X
- [in] pub_key_y: Unprovisioned device's Public Key Y

esp_err_t **esp_ble_mesh_provisioner_input_string**(**const** char **string*, uint8_t *link_idx*)

Provide provisioning input OOB string.

This is intended to be called after the *esp_ble_mesh_prov_t* prov_input_num callback has been called with ESP_BLE_MESH_ENTER_STRING as the action.

Return ESP_OK on success or error code otherwise.

Parameters

- [in] string: String input by Provisioner.
- [in] link_idx: The provisioning link index.

esp_err_t **esp_ble_mesh_provisioner_input_number**(uint32_t *number*, uint8_t *link_idx*)

Provide provisioning input OOB number.

This is intended to be called after the *esp_ble_mesh_prov_t* prov_input_num callback has been called with ESP_BLE_MESH_ENTER_NUMBER as the action.

Return ESP_OK on success or error code otherwise.

Parameters

- [in] number: Number input by Provisioner.
- [in] link_idx: The provisioning link index.

esp_err_t **esp_ble_mesh_provisioner_prov_enable**(*esp_ble_mesh_prov_bearer_t bearers*)

Enable one or more provisioning bearers.

Note PB-ADV: Enable BLE scan. PB-GATT: Initialize corresponding BLE Mesh Proxy info.

Return ESP_OK on success or error code otherwise.

Parameters

- `[in] bearers`: Bit-wise OR of provisioning bearers.

esp_err_t **esp_ble_mesh_provisioner_prov_disable**(*esp_ble_mesh_prov_bearer_t bearers*)

Disable one or more provisioning bearers.

Note PB-ADV: Disable BLE scan. PB-GATT: Break any existing BLE Mesh Provisioning connections.

Return ESP_OK on success or error code otherwise.

Parameters

- `[in] bearers`: Bit-wise OR of provisioning bearers.

esp_err_t **esp_ble_mesh_provisioner_add_unprov_dev**(*esp_ble_mesh_unprov_dev_add_t *add_dev*, *esp_ble_mesh_dev_add_flag_t flags*)

Add unprovisioned device info to the unprov_dev queue.

Return ESP_OK on success or error code otherwise.

Note : 1. Currently address type only supports public address and static random address.

1. If device UUID and/or device address as well as address type already exist in the device queue, but the bearer is different from the existing one, add operation will also be successful and it will update the provision bearer supported by the device.
2. For example, if the Provisioner wants to add an unprovisioned device info before receiving its unprovisioned device beacon or Mesh Provisioning advertising packets, the Provisioner can use this API to add the device info with each one or both of device UUID and device address added. When the Provisioner gets the device' s advertising packets, it will start provisioning the device internally.
   - In this situation, the Provisioner can set bearers with each one or both of ESP_BLE_MESH_PROV_ADV and ESP_BLE_MESH_PROV_GATT enabled, and cannot set flags with ADD_DEV_START_PROV_NOW_FLAG enabled.
3. Another example is when the Provisioner receives the unprovisioned device' s beacon or Mesh Provisioning advertising packets, the advertising packets will be reported on to the application layer using the callback registered by the function esp_ble_mesh_register_prov_callback. And in the callback, the Provisioner can call this API to start provisioning the device.
   - If the Provisioner uses PB-ADV to provision, either one or both of device UUID and device address can be added, bearers shall be set with ESP_BLE_MESH_PROV_ADV enabled and the flags shall be set with ADD_DEV_START_PROV_NOW_FLAG enabled.
   - If the Provisioner uses PB-GATT to provision, both the device UUID and device address need to be added, bearers shall be set with ESP_BLE_MESH_PROV_GATT enabled, and the flags shall be set with ADD_DEV_START_PROV_NOW_FLAG enabled.
   - If the Provisioner just wants to store the unprovisioned device info when receiving its advertising packets and start to provision it the next time (e.g. after receiving its advertising packets again), then it can add the device info with either one or both of device UUID and device address included. Bearers can be set with either one or both of ESP_BLE_MESH_PROV_ADV and ESP_BLE_MESH_PROV_GATT enabled (recommend to enable the bearer which will receive its advertising packets, because if the other bearer is enabled, the Provisioner is not aware if the device supports the bearer), and flags cannot be set with ADD_DEV_START_PROV_NOW_FLAG enabled.
   - Note: ESP_BLE_MESH_PROV_ADV, ESP_BLE_MESH_PROV_GATT and ADD_DEV_START_PROV_NOW_FLAG can not be enabled at the same time.

Parameters

- `[in] add_dev`: Pointer to a struct containing the device information
- `[in] flags`: Flags indicate several operations on the device information
  - Remove device information from queue after device has been provisioned (BIT0)
  - Start provisioning immediately after device is added to queue (BIT1)
  - Device can be removed if device queue is full (BIT2)

esp_err_t **esp_ble_mesh_provisioner_prov_device_with_addr**(**const** uint8_t *uuid*[16], *esp_ble_mesh_bd_addr_t* *addr*, *esp_ble_mesh_addr_type_t* *addr_type*, *esp_ble_mesh_prov_bearer_t* *bearer*, uint16_t *oob_info*, uint16_t *unicast_addr*)

Provision an unprovisioned device and assign a fixed unicast address for it in advance.

Return Zero on success or (negative) error code otherwise.

Note : 1. Currently address type only supports public address and static random address.

1. Bearer must be equal to ESP_BLE_MESH_PROV_ADV or ESP_BLE_MESH_PROV_GATT, since Provisioner will start to provision a device immediately once this function is invoked. And the input bearer must be identical with the one within the parameters of the ESP_BLE_MESH_PROVISIONER_RECV_UNPROV_ADV_PKT_EVT event.
2. If this function is used by a Provisioner to provision devices, the application should take care of the assigned unicast address and avoid overlap of the unicast addresses of different nodes.
3. Recommend to use only one of the functions "esp_ble_mesh_provisioner_add_unprov_dev" and "esp_ble_mesh_provisioner_prov_device_with_addr" by a Provisioner.

Parameters

- `[in] uuid`: Device UUID of the unprovisioned device
- `[in] addr`: Device address of the unprovisioned device
- `[in] addr_type`: Device address type of the unprovisioned device
- `[in] bearer`: Provisioning bearer going to be used by Provisioner
- `[in] oob_info`: OOB info of the unprovisioned device
- `[in] unicast_addr`: Unicast address going to be allocated for the unprovisioned device

esp_err_t **esp_ble_mesh_provisioner_delete_dev**(*esp_ble_mesh_device_delete_t* **del_dev*)

Delete device from queue, and reset current provisioning link with the device.

Note If the device is in the queue, remove it from the queue; if the device is being provisioned, terminate the provisioning procedure. Either one of the device address or device UUID can be used as input.

Return ESP_OK on success or error code otherwise.

Parameters

- `[in] del_dev`: Pointer to a struct containing the device information.

esp_err_t **esp_ble_mesh_provisioner_set_dev_uuid_match**(**const** uint8_t **match_val*, uint8_t *match_len*, uint8_t *offset*, bool *prov_after_match*)

This function is called by Provisioner to set the part of the device UUID to be compared before starting to provision.

Return ESP_OK on success or error code otherwise.

Parameters

- `[in] match_val`: Value to be compared with the part of the device UUID.
- `[in] match_len`: Length of the compared match value.
- `[in] offset`: Offset of the device UUID to be compared (based on zero).
- `[in] prov_after_match`: Flag used to indicate whether provisioner should start to provision the device immediately if the part of the UUID matches.

esp_err_t **esp_ble_mesh_provisioner_set_prov_data_info**(*esp_ble_mesh_prov_data_info_t* **prov_data_info*)

This function is called by Provisioner to set provisioning data information before starting to provision.

Return ESP_OK on success or error code otherwise.

Parameters

- `[in] prov_data_info`: Pointer to a struct containing net_idx or flags or iv_index.

esp_err_t **esp_ble_mesh_provisioner_set_static_oob_value**(**const** uint8_t **value*, uint8_t *length*)

This function is called by Provisioner to set static oob value used for provisioning.

AuthValues selected using a cryptographically secure random or pseudorandom number generator and having the maximum permitted entropy (128-bits) will be most difficult to brute-force. AuthValues with reduced entropy or generated in a predictable manner will not grant the same level of protection against this vulnerability. Selecting a new AuthValue with each provisioning attempt can also make it more difficult to launch a brute-force attack by requiring the attacker to restart the search with each provisioning attempt (CVE-2020-26556).

Note The Bluetooth SIG recommends that mesh implementations enforce a randomly selected AuthValue using all of the available bits, where permitted by the implementation. A large entropy helps ensure that a brute-force of the AuthValue, even a static AuthValue, cannot normally be completed in a reasonable time (CVE-2020-26557).

Return ESP_OK on success or error code otherwise.

Parameters

- `[in] value`: Pointer to the static oob value.
- `[in] length`: Length of the static oob value.

esp_err_t **esp_ble_mesh_provisioner_set_primary_elem_addr** (uint16_t *addr*)

This function is called by Provisioner to set own Primary element address.

Note This API must be invoked when BLE Mesh initialization is completed successfully, and can be invoked before Provisioner functionality is enabled. Once this API is invoked successfully, the prov_unicast_addr value in the struct *esp_ble_mesh_prov_t* will be ignored, and Provisioner will use this address as its own primary element address. And if the unicast address going to assigned for the next unprovisioned device is smaller than the input address + element number of Provisioner, then the address for the next unprovisioned device will be recalculated internally.

Return ESP_OK on success or error code otherwise.

Parameters

- `[in] addr`: Unicast address of the Primary element of Provisioner.

esp_err_t **esp_ble_mesh_set_fast_prov_info** (*esp_ble_mesh_fast_prov_info_t* **fast_prov_info*)

This function is called to set provisioning data information before starting fast provisioning.

Return ESP_OK on success or error code otherwise.

Parameters

- `[in] fast_prov_info`: Pointer to a struct containing unicast address range, net_idx, etc.

esp_err_t **esp_ble_mesh_set_fast_prov_action** (*esp_ble_mesh_fast_prov_action_t action*)

This function is called to start/suspend/exit fast provisioning.

Return ESP_OK on success or error code otherwise.

Parameters

- `[in] action`: fast provisioning action (i.e. enter, suspend, exit).

Type Definitions

typedef void (***esp_ble_mesh_prov_cb_t**) (*esp_ble_mesh_prov_cb_event_t* event, *esp_ble_mesh_prov_cb_param_t* *param)

: event, event code of provisioning events; param, parameters of provisioning events

typedef void (***esp_ble_mesh_prov_adv_cb_t**) (**const** *esp_ble_mesh_bd_addr_t* addr, **const** *esp_ble_mesh_addr_type_t* addr_type, **const** uint8_t adv_type, **const** uint8_t *dev_uuid, uint16_t oob_info, *esp_ble_mesh_prov_bearer_t* bearer)

Callback for Provisioner that received advertising packets from unprovisioned devices which are not in the unprovisioned device queue.

Report on the unprovisioned device beacon and mesh provisioning service adv data to application.

Parameters

- `[in] addr`: Pointer to the unprovisioned device address.
- `[in] addr_type`: Unprovisioned device address type.
- `[in] adv_type`: Adv packet type(ADV_IND or ADV_NONCONN_IND).
- `[in] dev_uuid`: Unprovisioned device UUID pointer.
- `[in] oob_info`: OOB information of the unprovisioned device.

- `[in] bearer`: Adv packet received from PB-GATT or PB-ADV bearer.

ESP-BLE-MESH GATT Proxy Server

Header File

- bt/esp_ble_mesh/api/core/include/esp_ble_mesh_proxy_api.h

Functions

esp_err_t **esp_ble_mesh_proxy_identity_enable**(void)

Enable advertising with Node Identity.

Note This API requires that GATT Proxy support be enabled. Once called, each subnet starts advertising using Node Identity for the next 60 seconds, and after 60s Network ID will be advertised. Under normal conditions, the BLE Mesh Proxy Node Identity and Network ID advertising will be enabled automatically by BLE Mesh stack after the device is provisioned.

Return ESP_OK on success or error code otherwise.

esp_err_t **esp_ble_mesh_proxy_gatt_enable**(void)

Enable BLE Mesh GATT Proxy Service.

Return ESP_OK on success or error code otherwise.

esp_err_t **esp_ble_mesh_proxy_gatt_disable**(void)

Disconnect the BLE Mesh GATT Proxy connection if there is any, and disable the BLE Mesh GATT Proxy Service.

Return ESP_OK on success or error code otherwise.

esp_err_t **esp_ble_mesh_proxy_client_connect**(*esp_ble_mesh_bd_addr_t* *addr*, *esp_ble_mesh_addr_type_t* *addr_type*, uint16_t *net_idx*)

Proxy Client creates a connection with the Proxy Server.

Return ESP_OK on success or error code otherwise.

Parameters

- `[in] addr`: Device address of the Proxy Server.
- `[in] addr_type`: Device address type(public or static random).
- `[in] net_idx`: NetKey Index related with Network ID in the Mesh Proxy advertising packet.

esp_err_t **esp_ble_mesh_proxy_client_disconnect**(uint8_t *conn_handle*)

Proxy Client terminates a connection with the Proxy Server.

Return ESP_OK on success or error code otherwise.

Parameters

- `[in] conn_handle`: Proxy connection handle.

esp_err_t **esp_ble_mesh_proxy_client_set_filter_type**(uint8_t *conn_handle*, uint16_t *net_idx*, *esp_ble_mesh_proxy_filter_type_t* *filter_type*)

Proxy Client sets the filter type of the Proxy Server.

Return ESP_OK on success or error code otherwise.

Parameters

- `[in] conn_handle`: Proxy connection handle.
- `[in] net_idx`: Corresponding NetKey Index.
- `[in] filter_type`: whitelist or blacklist.

esp_err_t **esp_ble_mesh_proxy_client_add_filter_addr**(uint8_t *conn_handle*, uint16_t *net_idx*, uint16_t *addr, uint16_t *addr_num*)

Proxy Client adds address to the Proxy Server filter list.

Return ESP_OK on success or error code otherwise.
Parameters
- `[in] conn_handle`: Proxy connection handle.
- `[in] net_idx`: Corresponding NetKey Index.
- `[in] addr`: Pointer to the filter address.
- `[in] addr_num`: Number of the filter address.

esp_err_t **esp_ble_mesh_proxy_client_remove_filter_addr**(uint8_t *conn_handle*, uint16_t *net_idx*, uint16_t **addr*, uint16_t *addr_num*)

Proxy Client removes address from the Proxy Server filter list.

Return ESP_OK on success or error code otherwise.
Parameters
- `[in] conn_handle`: Proxy connection handle.
- `[in] net_idx`: Corresponding NetKey Index.
- `[in] addr`: Pointer to the filter address.
- `[in] addr_num`: Number of the filter address.

ESP-BLE-MESH Models API Reference

This section contains ESP-BLE-MESH Model related APIs, event types, event parameters, etc.

There are six categories of models:

- *Configuration Client/Server Models*
- *Health Client/Server Models*
- *Generic Client/Server Models*
- *Sensor Client/Server Models*
- *Time and Scenes Client/Server Models*
- *Lighting Client/Server Models*

注解: Definitions related to Server Models are being updated, and will be released soon.

Configuration Client/Server Models

Header File

- bt/esp_ble_mesh/api/models/include/esp_ble_mesh_config_model_api.h

Functions

esp_err_t **esp_ble_mesh_register_config_client_callback**(*esp_ble_mesh_cfg_client_cb_t callback*)

Register BLE Mesh Config Client Model callback.

Return ESP_OK on success or error code otherwise.
Parameters
- `[in] callback`: Pointer to the callback function.

esp_err_t **esp_ble_mesh_register_config_server_callback**(*esp_ble_mesh_cfg_server_cb_t callback*)

Register BLE Mesh Config Server Model callback.

Return ESP_OK on success or error code otherwise.
Parameters
- `[in] callback`: Pointer to the callback function.

esp_err_t **esp_ble_mesh_config_client_get_state**(*esp_ble_mesh_client_common_param_t *params*, *esp_ble_mesh_cfg_client_get_state_t *get_state*)

Get the value of Config Server Model states using the Config Client Model get messages.

Note If you want to find the opcodes and corresponding meanings accepted by this API, please refer to esp_ble_mesh_opcode_config_client_get_t in esp_ble_mesh_defs.h

Return ESP_OK on success or error code otherwise.

Parameters

- `[in] params`: Pointer to BLE Mesh common client parameters.
- `[in] get_state`: Pointer to a union, each kind of opcode corresponds to one structure inside. Shall not be set to NULL.

esp_err_t **esp_ble_mesh_config_client_set_state**(*esp_ble_mesh_client_common_param_t *params*, *esp_ble_mesh_cfg_client_set_state_t *set_state*)

Set the value of the Configuration Server Model states using the Config Client Model set messages.

Note If you want to find the opcodes and corresponding meanings accepted by this API, please refer to esp_ble_mesh_opcode_config_client_set_t in esp_ble_mesh_defs.h

Return ESP_OK on success or error code otherwise.

Parameters

- `[in] params`: Pointer to BLE Mesh common client parameters.
- `[in] set_state`: Pointer to a union, each kind of opcode corresponds to one structure inside. Shall not be set to NULL.

Unions

union esp_ble_mesh_cfg_client_get_state_t

#include <esp_ble_mesh_config_model_api.h> For ESP_BLE_MESH_MODEL_OP_BEACON_GET ESP_BLE_MESH_MODEL_OP_COMPOSITION_DATA_GET ESP_BLE_MESH_MODEL_OP_DEFAULT_TTL_GET ESP_BLE_MESH_MODEL_OP_GATT_PROXY_GET ESP_BLE_MESH_MODEL_OP_RELAY_GET ESP_BLE_MESH_MODEL_OP_MODEL_PUB_GET ESP_BLE_MESH_MODEL_OP_FRIEND_GET ESP_BLE_MESH_MODEL_OP_HEARTBEAT_PUB_GET ESP_BLE_MESH_MODEL_OP_HEARTBEAT_SUB_GET the get_state parameter in the esp_ble_mesh_config_client_get_state function should not be set to NULL.

Public Members

esp_ble_mesh_cfg_model_pub_get_t **model_pub_get**

For ESP_BLE_MESH_MODEL_OP_MODEL_PUB_GET.

esp_ble_mesh_cfg_composition_data_get_t **comp_data_get**

For ESP_BLE_MESH_MODEL_OP_COMPOSITION_DATA_GET.

esp_ble_mesh_cfg_sig_model_sub_get_t **sig_model_sub_get**

For ESP_BLE_MESH_MODEL_OP_SIG_MODEL_SUB_GET

esp_ble_mesh_cfg_vnd_model_sub_get_t **vnd_model_sub_get**

For ESP_BLE_MESH_MODEL_OP_VENDOR_MODEL_SUB_GET

esp_ble_mesh_cfg_app_key_get_t **app_key_get**

For ESP_BLE_MESH_MODEL_OP_APP_KEY_GET.

esp_ble_mesh_cfg_node_identity_get_t **node_identity_get**

For ESP_BLE_MESH_MODEL_OP_NODE_IDENTITY_GET.

esp_ble_mesh_cfg_sig_model_app_get_t **sig_model_app_get**

For ESP_BLE_MESH_MODEL_OP_SIG_MODEL_APP_GET

esp_ble_mesh_cfg_vnd_model_app_get_t **vnd_model_app_get**

For ESP_BLE_MESH_MODEL_OP_VENDOR_MODEL_APP_GET

esp_ble_mesh_cfg_kr_phase_get_t **kr_phase_get**

For ESP_BLE_MESH_MODEL_OP_KEY_REFRESH_PHASE_GET

esp_ble_mesh_cfg_lpn_polltimeout_get_t **lpn_pollto_get**
For ESP_BLE_MESH_MODEL_OP_LPN_POLLTIMEOUT_GET

union esp_ble_mesh_cfg_client_set_state_t
#include <*esp_ble_mesh_config_model_api.h*> For ESP_BLE_MESH_MODEL_OP_BEACON_SET ESP_BLE_MESH_MODEL_OP_DEFAULT_TTL_SET ESP_BLE_MESH_MODEL_OP_GATT_PROXY_SET ESP_BLE_MESH_MODEL_OP_RELAY_SET ESP_BLE_MESH_MODEL_OP_MODEL_PUB_SET ESP_BLE_MESH_MODEL_OP_MODEL_SUB_ADD ESP_BLE_MESH_MODEL_OP_MODEL_SUB_VIRTUAL_ADDR ESP_BLE_MESH_MODEL_OP_MODEL_SUB_DELETE ESP_BLE_MESH_MODEL_OP_MODEL_SUB_VIRTUAL_AD ESP_BLE_MESH_MODEL_OP_MODEL_SUB_OVERWRITE ESP_BLE_MESH_MODEL_OP_MODEL_SUB_VIRTUAL ESP_BLE_MESH_MODEL_OP_NET_KEY_ADD ESP_BLE_MESH_MODEL_OP_APP_KEY_ADD ESP_BLE_MESH_MODEL_OP_MODEL_APP_BIND ESP_BLE_MESH_MODEL_OP_NODE_RESET ESP_BLE_MESH_MODEL_OP_FRIEND_SET ESP_BLE_MESH_MODEL_OP_HEARTBEAT_PUB_SET ESP_BLE_MESH_MODEL_OP_HEARTBEAT_SUB_SET the set_state parameter in the esp_ble_mesh_config_client_set_state function should not be set to NULL.

Public Members

esp_ble_mesh_cfg_beacon_set_t **beacon_set**
For ESP_BLE_MESH_MODEL_OP_BEACON_SET

esp_ble_mesh_cfg_default_ttl_set_t **default_ttl_set**
For ESP_BLE_MESH_MODEL_OP_DEFAULT_TTL_SET

esp_ble_mesh_cfg_friend_set_t **friend_set**
For ESP_BLE_MESH_MODEL_OP_FRIEND_SET

esp_ble_mesh_cfg_gatt_proxy_set_t **gatt_proxy_set**
For ESP_BLE_MESH_MODEL_OP_GATT_PROXY_SET

esp_ble_mesh_cfg_relay_set_t **relay_set**
For ESP_BLE_MESH_MODEL_OP_RELAY_SET

esp_ble_mesh_cfg_net_key_add_t **net_key_add**
For ESP_BLE_MESH_MODEL_OP_NET_KEY_ADD

esp_ble_mesh_cfg_app_key_add_t **app_key_add**
For ESP_BLE_MESH_MODEL_OP_APP_KEY_ADD

esp_ble_mesh_cfg_model_app_bind_t **model_app_bind**
For ESP_BLE_MESH_MODEL_OP_MODEL_APP_BIND

esp_ble_mesh_cfg_model_pub_set_t **model_pub_set**
For ESP_BLE_MESH_MODEL_OP_MODEL_PUB_SET

esp_ble_mesh_cfg_model_sub_add_t **model_sub_add**
For ESP_BLE_MESH_MODEL_OP_MODEL_SUB_ADD

esp_ble_mesh_cfg_model_sub_delete_t **model_sub_delete**
For ESP_BLE_MESH_MODEL_OP_MODEL_SUB_DELETE

esp_ble_mesh_cfg_model_sub_overwrite_t **model_sub_overwrite**
For ESP_BLE_MESH_MODEL_OP_MODEL_SUB_OVERWRITE

esp_ble_mesh_cfg_model_sub_va_add_t **model_sub_va_add**
For ESP_BLE_MESH_MODEL_OP_MODEL_SUB_VIRTUAL_ADDR_ADD

esp_ble_mesh_cfg_model_sub_va_delete_t **model_sub_va_delete**
For ESP_BLE_MESH_MODEL_OP_MODEL_SUB_VIRTUAL_ADDR_DELETE

esp_ble_mesh_cfg_model_sub_va_overwrite_t **model_sub_va_overwrite**
For ESP_BLE_MESH_MODEL_OP_MODEL_SUB_VIRTUAL_ADDR_OVERWRITE

esp_ble_mesh_cfg_heartbeat_pub_set_t **heartbeat_pub_set**
For ESP_BLE_MESH_MODEL_OP_HEARTBEAT_PUB_SET

esp_ble_mesh_cfg_heartbeat_sub_set_t **heartbeat_sub_set**
For ESP_BLE_MESH_MODEL_OP_HEARTBEAT_SUB_SET

esp_ble_mesh_cfg_model_pub_va_set_t **model_pub_va_set**
For ESP_BLE_MESH_MODEL_OP_MODEL_PUB_VIRTUAL_ADDR_SET

esp_ble_mesh_cfg_model_sub_delete_all_t **model_sub_delete_all**
For ESP_BLE_MESH_MODEL_OP_MODEL_SUB_DELETE_ALL

esp_ble_mesh_cfg_net_key_update_t **net_key_update**
For ESP_BLE_MESH_MODEL_OP_NET_KEY_UPDATE

esp_ble_mesh_cfg_net_key_delete_t **net_key_delete**
For ESP_BLE_MESH_MODEL_OP_NET_KEY_DELETE

esp_ble_mesh_cfg_app_key_update_t **app_key_update**
For ESP_BLE_MESH_MODEL_OP_APP_KEY_UPDATE

esp_ble_mesh_cfg_app_key_delete_t **app_key_delete**
For ESP_BLE_MESH_MODEL_OP_APP_KEY_DELETE

esp_ble_mesh_cfg_node_identity_set_t **node_identity_set**
For ESP_BLE_MESH_MODEL_OP_NODE_IDENTITY_SET

esp_ble_mesh_cfg_model_app_unbind_t **model_app_unbind**
For ESP_BLE_MESH_MODEL_OP_MODEL_APP_UNBIND

esp_ble_mesh_cfg_kr_phase_set_t **kr_phase_set**
For ESP_BLE_MESH_MODEL_OP_KEY_REFRESH_PHASE_SET

esp_ble_mesh_cfg_net_transmit_set_t **net_transmit_set**
For ESP_BLE_MESH_MODEL_OP_NETWORK_TRANSMIT_SET

union esp_ble_mesh_cfg_client_common_cb_param_t
#include <esp_ble_mesh_config_model_api.h> Configuration Client Model received message union.

Public Members

esp_ble_mesh_cfg_beacon_status_cb_t **beacon_status**
The beacon status value

esp_ble_mesh_cfg_comp_data_status_cb_t **comp_data_status**
The composition data status value

esp_ble_mesh_cfg_default_ttl_status_cb_t **default_ttl_status**
The default_ttl status value

esp_ble_mesh_cfg_gatt_proxy_status_cb_t **gatt_proxy_status**
The gatt_proxy status value

esp_ble_mesh_cfg_relay_status_cb_t **relay_status**
The relay status value

esp_ble_mesh_cfg_model_pub_status_cb_t **model_pub_status**
The model publication status value

esp_ble_mesh_cfg_model_sub_status_cb_t **model_sub_status**
The model subscription status value

esp_ble_mesh_cfg_net_key_status_cb_t **netkey_status**
The netkey status value

esp_ble_mesh_cfg_app_key_status_cb_t **appkey_status**
The appkey status value

esp_ble_mesh_cfg_mod_app_status_cb_t **model_app_status**
The model app status value

esp_ble_mesh_cfg_friend_status_cb_t **friend_status**
The friend status value

esp_ble_mesh_cfg_hb_pub_status_cb_t **heartbeat_pub_status**
The heartbeat publication status value

esp_ble_mesh_cfg_hb_sub_status_cb_t **heartbeat_sub_status**
The heartbeat subscription status value

esp_ble_mesh_cfg_net_trans_status_cb_t **net_transmit_status**
The network transmit status value

esp_ble_mesh_cfg_model_sub_list_cb_t **model_sub_list**
The model subscription list value

esp_ble_mesh_cfg_net_key_list_cb_t **netkey_list**
The network key index list value

esp_ble_mesh_cfg_app_key_list_cb_t **appkey_list**
The application key index list value

esp_ble_mesh_cfg_node_id_status_cb_t **node_identity_status**
The node identity status value

esp_ble_mesh_cfg_model_app_list_cb_t **model_app_list**
The model application key index list value

esp_ble_mesh_cfg_kr_phase_status_cb_t **kr_phase_status**
The key refresh phase status value

esp_ble_mesh_cfg_lpn_pollto_status_cb_t **lpn_timeout_status**
The low power node poll timeout status value

union esp_ble_mesh_cfg_server_state_change_t
#include <esp_ble_mesh_config_model_api.h> Configuration Server model state change value union.

Public Members

esp_ble_mesh_state_change_cfg_mod_pub_set_t **mod_pub_set**
The recv_op in ctx can be used to decide which state is changed.Config Model Publication Set

esp_ble_mesh_state_change_cfg_model_sub_add_t **mod_sub_add**
Config Model Subscription Add

esp_ble_mesh_state_change_cfg_model_sub_delete_t **mod_sub_delete**
Config Model Subscription Delete

esp_ble_mesh_state_change_cfg_netkey_add_t **netkey_add**
Config NetKey Add

esp_ble_mesh_state_change_cfg_netkey_update_t **netkey_update**
Config NetKey Update

esp_ble_mesh_state_change_cfg_netkey_delete_t **netkey_delete**
Config NetKey Delete

esp_ble_mesh_state_change_cfg_appkey_add_t **appkey_add**
Config AppKey Add

esp_ble_mesh_state_change_cfg_appkey_update_t **appkey_update**
Config AppKey Update

esp_ble_mesh_state_change_cfg_appkey_delete_t **appkey_delete**
Config AppKey Delete

esp_ble_mesh_state_change_cfg_model_app_bind_t **mod_app_bind**
Config Model App Bind

esp_ble_mesh_state_change_cfg_model_app_unbind_t **mod_app_unbind**
Config Model App Unbind

esp_ble_mesh_state_change_cfg_kr_phase_set_t **kr_phase_set**
Config Key Refresh Phase Set

union esp_ble_mesh_cfg_server_cb_value_t
#include <esp_ble_mesh_config_model_api.h> Configuration Server model callback value union.

Public Members

esp_ble_mesh_cfg_server_state_change_t **state_change**
ESP_BLE_MESH_CFG_SERVER_STATE_CHANGE_EVT

Structures

struct esp_ble_mesh_cfg_srv
Configuration Server Model context

Public Members

esp_ble_mesh_model_t ***model**
Pointer to Configuration Server Model

uint8_t **net_transmit**
Network Transmit state

uint8_t **relay**
Relay Mode state

uint8_t **relay_retransmit**
Relay Retransmit state

uint8_t **beacon**
Secure Network Beacon state

uint8_t **gatt_proxy**
GATT Proxy state

uint8_t **friend_state**
Friend state

uint8_t **default_ttl**
Default TTL

struct k_delayed_work **timer**
Heartbeat Publication timer

uint16_t **dst**
Destination address for Heartbeat messages

uint16_t **count**
Number of Heartbeat messages to be sent

Number of Heartbeat messages received

uint8_t **period**
Period for sending Heartbeat messages

uint8_t **ttl**
TTL to be used when sending Heartbeat messages

uint16_t **feature**
Bit field indicating features that trigger Heartbeat messages when changed

uint16_t **net_idx**
NetKey Index used by Heartbeat Publication

struct *esp_ble_mesh_cfg_srv*::**[anonymous] heartbeat_pub**
Heartbeat Publication

int64_t **expiry**
Timestamp when Heartbeat subscription period is expired

uint16_t **src**
Source address for Heartbeat messages

uint8_t **min_hops**
Minimum hops when receiving Heartbeat messages

uint8_t **max_hops**
Maximum hops when receiving Heartbeat messages

esp_ble_mesh_cb_t **heartbeat_recv_cb**
Optional heartbeat subscription tracking function

struct *esp_ble_mesh_cfg_srv*::**[anonymous] heartbeat_sub**
Heartbeat Subscription

struct esp_ble_mesh_cfg_composition_data_get_t
Parameters of Config Composition Data Get.

Public Members

uint8_t **page**
Page number of the Composition Data.

struct esp_ble_mesh_cfg_model_pub_get_t
Parameters of Config Model Publication Get.

Public Members

uint16_t **element_addr**
The element address

uint16_t **model_id**
The model id

uint16_t **company_id**
The company id, if not a vendor model, shall set to 0xFFFF

struct esp_ble_mesh_cfg_sig_model_sub_get_t
Parameters of Config SIG Model Subscription Get.

Public Members

uint16_t **element_addr**
The element address

uint16_t **model_id**
The model id

struct esp_ble_mesh_cfg_vnd_model_sub_get_t
Parameters of Config Vendor Model Subscription Get.

Public Members

uint16_t **element_addr**
The element address

uint16_t **model_id**
The model id

uint16_t **company_id**
The company id, if not a vendor model, shall set to 0xFFFF

struct esp_ble_mesh_cfg_app_key_get_t
Parameters of Config AppKey Get.

Public Members

uint16_t **net_idx**
The network key index

struct esp_ble_mesh_cfg_node_identity_get_t
Parameters of Config Node Identity Get.

Public Members

uint16_t **net_idx**
The network key index

struct esp_ble_mesh_cfg_sig_model_app_get_t
Parameters of Config SIG Model App Get.

Public Members

uint16_t **element_addr**
The element address

uint16_t **model_id**
The model id

struct esp_ble_mesh_cfg_vnd_model_app_get_t
Parameters of Config Vendor Model App Get.

Public Members

uint16_t **element_addr**
The element address

uint16_t **model_id**
The model id

uint16_t **company_id**
The company id, if not a vendor model, shall set to 0xFFFF

struct esp_ble_mesh_cfg_kr_phase_get_t
Parameters of Config Key Refresh Phase Get.

Public Members

uint16_t **net_idx**
The network key index

struct esp_ble_mesh_cfg_lpn_polltimeout_get_t
Parameters of Config Low Power Node PollTimeout Get.

Public Members

uint16_t **lpn_addr**
The unicast address of the Low Power node

struct esp_ble_mesh_cfg_beacon_set_t
Parameters of Config Beacon Set.

Public Members

uint8_t **beacon**
New Secure Network Beacon state

struct esp_ble_mesh_cfg_default_ttl_set_t
Parameters of Config Default TTL Set.

Public Members

uint8_t **ttl**
The default TTL state value

struct esp_ble_mesh_cfg_friend_set_t
Parameters of Config Friend Set.

Public Members

uint8_t **friend_state**
The friend state value

struct esp_ble_mesh_cfg_gatt_proxy_set_t
Parameters of Config GATT Proxy Set.

Public Members

uint8_t **gatt_proxy**
The GATT Proxy state value

struct esp_ble_mesh_cfg_relay_set_t
Parameters of Config Relay Set.

Public Members

uint8_t **relay**
The relay value

uint8_t **relay_retransmit**
The relay retransmit value

struct esp_ble_mesh_cfg_net_key_add_t
Parameters of Config NetKey Add.

Public Members

uint16_t **net_idx**
The network key index

uint8_t **net_key**[16]
The network key value

struct esp_ble_mesh_cfg_app_key_add_t
Parameters of Config AppKey Add.

Public Members

uint16_t **net_idx**
The network key index

uint16_t **app_idx**
The app key index

uint8_t **app_key**[16]
The app key value

struct esp_ble_mesh_cfg_model_app_bind_t
Parameters of Config Model App Bind.

Public Members

uint16_t **element_addr**
The element address

uint16_t **model_app_idx**
Index of the app key to bind with the model

uint16_t **model_id**
The model id

uint16_t **company_id**
The company id, if not a vendor model, shall set to 0xFFFF

struct esp_ble_mesh_cfg_model_pub_set_t
Parameters of Config Model Publication Set.

Public Members

uint16_t **element_addr**
The element address

uint16_t **publish_addr**
Value of the publish address

uint16_t **publish_app_idx**
Index of the application key

bool **cred_flag**
Value of the Friendship Credential Flag

uint8_t **publish_ttl**
Default TTL value for the publishing messages

uint8_t **publish_period**
Period for periodic status publishing

uint8_t **publish_retransmit**
Number of retransmissions and number of 50-millisecond steps between retransmissions

uint16_t **model_id**
The model id

uint16_t **company_id**
The company id, if not a vendor model, shall set to 0xFFFF

struct esp_ble_mesh_cfg_model_sub_add_t
Parameters of Config Model Subscription Add.

Public Members

uint16_t **element_addr**
The element address

uint16_t **sub_addr**
The address to be added to the Subscription List

uint16_t **model_id**
The model id

uint16_t **company_id**
The company id, if not a vendor model, shall set to 0xFFFF

struct esp_ble_mesh_cfg_model_sub_delete_t
Parameters of Config Model Subscription Delete.

Public Members

uint16_t **element_addr**
The element address

uint16_t **sub_addr**
The address to be removed from the Subscription List

uint16_t **model_id**
The model id

uint16_t **company_id**
The company id, if not a vendor model, shall set to 0xFFFF

struct esp_ble_mesh_cfg_model_sub_overwrite_t
Parameters of Config Model Subscription Overwrite.

Public Members

uint16_t **element_addr**
The element address

uint16_t **sub_addr**
The address to be added to the Subscription List

uint16_t **model_id**
The model id

uint16_t **company_id**
The company id, if not a vendor model, shall set to 0xFFFF

struct esp_ble_mesh_cfg_model_sub_va_add_t
Parameters of Config Model Subscription Virtual Address Add.

Public Members

uint16_t **element_addr**
The element address

uint8_t **label_uuid**[16]
The Label UUID of the virtual address to be added to the Subscription List

uint16_t **model_id**
The model id

uint16_t **company_id**
The company id, if not a vendor model, shall set to 0xFFFF

struct esp_ble_mesh_cfg_model_sub_va_delete_t
Parameters of Config Model Subscription Virtual Address Delete.

Public Members

uint16_t **element_addr**
The element address

uint8_t **label_uuid**[16]
The Label UUID of the virtual address to be removed from the Subscription List

uint16_t **model_id**
The model id

uint16_t **company_id**
The company id, if not a vendor model, shall set to 0xFFFF

struct esp_ble_mesh_cfg_model_sub_va_overwrite_t
Parameters of Config Model Subscription Virtual Address Overwrite.

Public Members

uint16_t **element_addr**
The element address

uint8_t **label_uuid**[16]
The Label UUID of the virtual address to be added to the Subscription List

uint16_t **model_id**
The model id

uint16_t **company_id**
The company id, if not a vendor model, shall set to 0xFFFF

struct esp_ble_mesh_cfg_model_pub_va_set_t
Parameters of Config Model Publication Virtual Address Set.

Public Members

uint16_t **element_addr**
The element address

uint8_t **label_uuid**[16]
Value of the Label UUID publish address

uint16_t **publish_app_idx**
Index of the application key

bool **cred_flag**
Value of the Friendship Credential Flag

uint8_t **publish_ttl**
Default TTL value for the publishing messages

uint8_t **publish_period**
Period for periodic status publishing

uint8_t **publish_retransmit**
Number of retransmissions and number of 50-millisecond steps between retransmissions

uint16_t **model_id**
The model id

uint16_t **company_id**
The company id, if not a vendor model, shall set to 0xFFFF

struct esp_ble_mesh_cfg_model_sub_delete_all_t
Parameters of Config Model Subscription Delete All.

Public Members

uint16_t **element_addr**
The element address

uint16_t **model_id**
The model id

uint16_t **company_id**
The company id, if not a vendor model, shall set to 0xFFFF

struct esp_ble_mesh_cfg_net_key_update_t
Parameters of Config NetKey Update.

Public Members

uint16_t **net_idx**
The network key index

uint8_t **net_key**[16]
The network key value

struct esp_ble_mesh_cfg_net_key_delete_t
Parameters of Config NetKey Delete.

Public Members

uint16_t **net_idx**
The network key index

struct esp_ble_mesh_cfg_app_key_update_t
Parameters of Config AppKey Update.

Public Members

uint16_t **net_idx**
The network key index

uint16_t **app_idx**
The app key index

uint8_t **app_key**[16]
The app key value

struct esp_ble_mesh_cfg_app_key_delete_t
Parameters of Config AppKey Delete.

Public Members

uint16_t **net_idx**
The network key index

uint16_t **app_idx**
The app key index

struct esp_ble_mesh_cfg_node_identity_set_t
Parameters of Config Node Identity Set.

Public Members

uint16_t **net_idx**
The network key index

uint8_t **identity**
New Node Identity state

struct esp_ble_mesh_cfg_model_app_unbind_t
Parameters of Config Model App Unbind.

Public Members

uint16_t **element_addr**
The element address

uint16_t **model_app_idx**
Index of the app key to bind with the model

uint16_t **model_id**
The model id

uint16_t **company_id**
The company id, if not a vendor model, shall set to 0xFFFF

struct esp_ble_mesh_cfg_kr_phase_set_t
Parameters of Config Key Refresh Phase Set.

Public Members

uint16_t **net_idx**
The network key index

uint8_t **transition**
New Key Refresh Phase Transition

struct esp_ble_mesh_cfg_net_transmit_set_t
Parameters of Config Network Transmit Set.

Public Members

uint8_t **net_transmit**
Network Transmit State

struct esp_ble_mesh_cfg_heartbeat_pub_set_t
Parameters of Config Model Heartbeat Publication Set.

Public Members

uint16_t **dst**
Destination address for Heartbeat messages

uint8_t **count**
Number of Heartbeat messages to be sent

uint8_t **period**
Period for sending Heartbeat messages

uint8_t **ttl**
TTL to be used when sending Heartbeat messages

uint16_t **feature**
Bit field indicating features that trigger Heartbeat messages when changed

uint16_t **net_idx**
NetKey Index

struct esp_ble_mesh_cfg_heartbeat_sub_set_t
Parameters of Config Model Heartbeat Subscription Set.

Public Members

uint16_t **src**
Source address for Heartbeat messages

uint16_t **dst**
Destination address for Heartbeat messages

uint8_t **period**
Period for receiving Heartbeat messages

struct esp_ble_mesh_cfg_beacon_status_cb_t
Parameter of Config Beacon Status

Public Members

uint8_t **beacon**
Secure Network Beacon state value

struct esp_ble_mesh_cfg_comp_data_status_cb_t
Parameters of Config Composition Data Status

Public Members

uint8_t **page**
Page number of the Composition Data

struct net_buf_simple ***composition_data**
Pointer to Composition Data for the identified page

struct esp_ble_mesh_cfg_default_ttl_status_cb_t
Parameter of Config Default TTL Status

Public Members

uint8_t **default_ttl**
Default TTL state value

struct esp_ble_mesh_cfg_gatt_proxy_status_cb_t
Parameter of Config GATT Proxy Status

Public Members

uint8_t **gatt_proxy**
GATT Proxy state value

struct esp_ble_mesh_cfg_relay_status_cb_t
Parameters of Config Relay Status

Public Members

uint8_t **relay**
Relay state value

uint8_t **retransmit**
Relay retransmit value(number of retransmissions and number of 10-millisecond steps between retransmissions)

struct esp_ble_mesh_cfg_model_pub_status_cb_t
Parameters of Config Model Publication Status

Public Members

uint8_t **status**
Status Code for the request message

uint16_t **element_addr**
Address of the element

uint16_t **publish_addr**
Value of the publish address

uint16_t **app_idx**
Index of the application key

bool **cred_flag**
Value of the Friendship Credential Flag

uint8_t **ttl**
Default TTL value for the outgoing messages

uint8_t **period**
Period for periodic status publishing

uint8_t **transmit**
Number of retransmissions and number of 50-millisecond steps between retransmissions

uint16_t **company_id**
Company ID

uint16_t **model_id**
Model ID

struct esp_ble_mesh_cfg_model_sub_status_cb_t
Parameters of Config Model Subscription Status

Public Members

uint8_t **status**
Status Code for the request message

uint16_t **element_addr**
Address of the element

uint16_t **sub_addr**
Value of the address

uint16_t **company_id**
Company ID

uint16_t **model_id**
Model ID

struct esp_ble_mesh_cfg_net_key_status_cb_t
Parameters of Config NetKey Status

Public Members

uint8_t **status**
Status Code for the request message

uint16_t **net_idx**
Index of the NetKey

struct esp_ble_mesh_cfg_app_key_status_cb_t
Parameters of Config AppKey Status

Public Members

uint8_t **status**
Status Code for the request message

uint16_t **net_idx**
Index of the NetKey

uint16_t **app_idx**
Index of the application key

struct esp_ble_mesh_cfg_mod_app_status_cb_t
Parameters of Config Model App Status

Public Members

uint8_t **status**
Status Code for the request message

uint16_t **element_addr**
Address of the element

uint16_t **app_idx**
Index of the application key

uint16_t **company_id**
Company ID

uint16_t **model_id**
Model ID

struct esp_ble_mesh_cfg_friend_status_cb_t
Parameter of Config Friend Status

Public Members

uint8_t **friend_state**
Friend state value

struct esp_ble_mesh_cfg_hb_pub_status_cb_t
Parameters of Config Heartbeat Publication Status

Public Members

uint8_t **status**
Status Code for the request message

uint16_t **dst**
Destination address for Heartbeat messages

uint8_t **count**
Number of Heartbeat messages remaining to be sent

uint8_t **period**
Period for sending Heartbeat messages

uint8_t **ttl**
TTL to be used when sending Heartbeat messages

uint16_t **features**
Features that trigger Heartbeat messages when changed

uint16_t **net_idx**
Index of the NetKey

struct esp_ble_mesh_cfg_hb_sub_status_cb_t
Parameters of Config Heartbeat Subscription Status

Public Members

uint8_t **status**
Status Code for the request message

uint16_t **src**
Source address for Heartbeat messages

uint16_t **dst**
Destination address for Heartbeat messages

uint8_t **period**
Remaining Period for processing Heartbeat messages

uint8_t **count**
Number of Heartbeat messages received

uint8_t **min_hops**
Minimum hops when receiving Heartbeat messages

uint8_t **max_hops**
Maximum hops when receiving Heartbeat messages

struct esp_ble_mesh_cfg_net_trans_status_cb_t
Parameters of Config Network Transmit Status

Public Members

uint8_t **net_trans_count** : 3
Number of transmissions for each Network PDU originating from the node

uint8_t **net_trans_step** : 5
Maximum hops when receiving Heartbeat messages

struct esp_ble_mesh_cfg_model_sub_list_cb_t
Parameters of Config SIG/Vendor Subscription List

Public Members

uint8_t **status**
Status Code for the request message

uint16_t **element_addr**
Address of the element

uint16_t **company_id**
Company ID

uint16_t **model_id**
Model ID

struct net_buf_simple ***sub_addr**
A block of all addresses from the Subscription List

struct esp_ble_mesh_cfg_net_key_list_cb_t
Parameter of Config NetKey List

Public Members

struct net_buf_simple ***net_idx**
A list of NetKey Indexes known to the node

struct esp_ble_mesh_cfg_app_key_list_cb_t
Parameters of Config AppKey List

Public Members

uint8_t **status**
Status Code for the request message

uint16_t **net_idx**
NetKey Index of the NetKey that the AppKeys are bound to

struct net_buf_simple ***app_idx**
A list of AppKey indexes that are bound to the NetKey identified by NetKeyIndex

struct esp_ble_mesh_cfg_node_id_status_cb_t
Parameters of Config Node Identity Status

Public Members

uint8_t **status**
Status Code for the request message

uint16_t **net_idx**
Index of the NetKey

uint8_t **identity**
Node Identity state

struct esp_ble_mesh_cfg_model_app_list_cb_t
Parameters of Config SIG/Vendor Model App List

Public Members

uint8_t **status**
Status Code for the request message

uint16_t **element_addr**
Address of the element

uint16_t **company_id**
Company ID

uint16_t **model_id**
Model ID

struct net_buf_simple ***app_idx**
All AppKey indexes bound to the Model

struct esp_ble_mesh_cfg_kr_phase_status_cb_t
Parameters of Config Key Refresh Phase Status

Public Members

uint8_t **status**
Status Code for the request message

uint16_t **net_idx**
Index of the NetKey

uint8_t **phase**
Key Refresh Phase state

struct esp_ble_mesh_cfg_lpn_pollto_status_cb_t
Parameters of Config Low Power Node PollTimeout Status

Public Members

uint16_t **lpn_addr**
The unicast address of the Low Power node

int32_t **poll_timeout**
The current value of the PollTimeout timer of the Low Power node

struct esp_ble_mesh_cfg_client_cb_param_t
Configuration Client Model callback parameters

Public Members

int **error_code**
Appropriate error code

esp_ble_mesh_client_common_param_t ***params**
The client common parameters

esp_ble_mesh_cfg_client_common_cb_param_t **status_cb**
The config status message callback values

struct esp_ble_mesh_state_change_cfg_mod_pub_set_t
Configuration Server model related context.

Public Members

uint16_t **element_addr**
Element Address

uint16_t **pub_addr**
Publish Address

uint16_t **app_idx**
AppKey Index

bool **cred_flag**
Friendship Credential Flag

uint8_t **pub_ttl**
Publish TTL

uint8_t **pub_period**
Publish Period

uint8_t **pub_retransmit**
Publish Retransmit

uint16_t **company_id**
Company ID

uint16_t **model_id**
Model ID

struct esp_ble_mesh_state_change_cfg_model_sub_add_t
Parameters of Config Model Subscription Add

Public Members

uint16_t **element_addr**
Element Address

uint16_t **sub_addr**
Subscription Address

uint16_t **company_id**
Company ID

uint16_t **model_id**
Model ID

struct esp_ble_mesh_state_change_cfg_model_sub_delete_t
Parameters of Config Model Subscription Delete

Public Members

uint16_t **element_addr**
Element Address

uint16_t **sub_addr**
Subscription Address

uint16_t **company_id**
Company ID

uint16_t **model_id**
Model ID

struct esp_ble_mesh_state_change_cfg_netkey_add_t
Parameters of Config NetKey Add

Public Members

uint16_t **net_idx**
NetKey Index

uint8_t **net_key**[16]
NetKey

struct esp_ble_mesh_state_change_cfg_netkey_update_t
Parameters of Config NetKey Update

Public Members

uint16_t **net_idx**
NetKey Index

uint8_t **net_key**[16]
NetKey

struct esp_ble_mesh_state_change_cfg_netkey_delete_t
Parameter of Config NetKey Delete

Public Members

uint16_t **net_idx**
NetKey Index

struct esp_ble_mesh_state_change_cfg_appkey_add_t
Parameters of Config AppKey Add

Public Members

uint16_t **net_idx**
NetKey Index

uint16_t **app_idx**
AppKey Index

uint8_t **app_key**[16]
AppKey

struct esp_ble_mesh_state_change_cfg_appkey_update_t
Parameters of Config AppKey Update

Public Members

uint16_t **net_idx**
NetKey Index

uint16_t **app_idx**
AppKey Index

uint8_t **app_key**[16]
AppKey

struct esp_ble_mesh_state_change_cfg_appkey_delete_t
Parameters of Config AppKey Delete

Public Members

uint16_t **net_idx**
NetKey Index

uint16_t **app_idx**
AppKey Index

struct esp_ble_mesh_state_change_cfg_model_app_bind_t
Parameters of Config Model App Bind

Public Members

uint16_t **element_addr**
Element Address

uint16_t **app_idx**
AppKey Index

uint16_t **company_id**
Company ID

uint16_t **model_id**
Model ID

struct esp_ble_mesh_state_change_cfg_model_app_unbind_t
Parameters of Config Model App Unbind

Public Members

uint16_t **element_addr**
Element Address

uint16_t **app_idx**
AppKey Index

uint16_t **company_id**
Company ID

uint16_t **model_id**
Model ID

struct esp_ble_mesh_state_change_cfg_kr_phase_set_t
Parameters of Config Key Refresh Phase Set

Public Members

uint16_t **net_idx**
NetKey Index

uint8_t **kr_phase**
New Key Refresh Phase Transition

struct esp_ble_mesh_cfg_server_cb_param_t
Configuration Server model callback parameters

Public Members

esp_ble_mesh_model_t ***model**
Pointer to the server model structure

esp_ble_mesh_msg_ctx_t **ctx**
Context of the received message

esp_ble_mesh_cfg_server_cb_value_t **value**
Value of the received configuration messages

Macros

ESP_BLE_MESH_MODEL_CFG_SRV(srv_data)
Define a new Config Server Model.

Note The Config Server Model can only be included by a Primary Element.
Return New Config Server Model instance.
Parameters
- `srv_data`: Pointer to a unique Config Server Model user_data.

ESP_BLE_MESH_MODEL_CFG_CLI(cli_data)
Define a new Config Client Model.

Note The Config Client Model can only be included by a Primary Element.
Return New Config Client Model instance.
Parameters
- `cli_data`: Pointer to a unique struct *esp_ble_mesh_client_t*.

Type Definitions

typedef struct *esp_ble_mesh_cfg_srv* **esp_ble_mesh_cfg_srv_t**
Configuration Server Model context

typedef void (***esp_ble_mesh_cfg_client_cb_t**)(*esp_ble_mesh_cfg_client_cb_event_t* event, *esp_ble_mesh_cfg_client_cb_param_t* *param)
Bluetooth Mesh Config Client and Server Model functions.

Configuration Client Model callback function type

Parameters
- `event`: Event type
- `param`: Pointer to callback parameter

typedef void (***esp_ble_mesh_cfg_server_cb_t**)(*esp_ble_mesh_cfg_server_cb_event_t* event, *esp_ble_mesh_cfg_server_cb_param_t* *param)
Configuration Server Model callback function type.

Parameters
- `event`: Event type
- `param`: Pointer to callback parameter

Enumerations

enum esp_ble_mesh_cfg_client_cb_event_t

This enum value is the event of Configuration Client Model

Values:

ESP_BLE_MESH_CFG_CLIENT_GET_STATE_EVT

ESP_BLE_MESH_CFG_CLIENT_SET_STATE_EVT

ESP_BLE_MESH_CFG_CLIENT_PUBLISH_EVT

ESP_BLE_MESH_CFG_CLIENT_TIMEOUT_EVT

ESP_BLE_MESH_CFG_CLIENT_EVT_MAX

enum esp_ble_mesh_cfg_server_cb_event_t

This enum value is the event of Configuration Server model

Values:

ESP_BLE_MESH_CFG_SERVER_STATE_CHANGE_EVT

ESP_BLE_MESH_CFG_SERVER_EVT_MAX

Health Client/Server Models

Header File

- bt/esp_ble_mesh/api/models/include/esp_ble_mesh_health_model_api.h

Functions

esp_err_t **esp_ble_mesh_register_health_client_callback**(*esp_ble_mesh_health_client_cb_t callback*)

Register BLE Mesh Health Model callback, the callback will report Health Client & Server Model events.

Return ESP_OK on success or error code otherwise.

Parameters

- `[in] callback`: Pointer to the callback function.

esp_err_t **esp_ble_mesh_register_health_server_callback**(*esp_ble_mesh_health_server_cb_t callback*)

Register BLE Mesh Health Server Model callback.

Return ESP_OK on success or error code otherwise.

Parameters

- `[in] callback`: Pointer to the callback function.

esp_err_t **esp_ble_mesh_health_client_get_state**(*esp_ble_mesh_client_common_param_t* **params*, *esp_ble_mesh_health_client_get_state_t* **get_state*)

This function is called to get the Health Server states using the Health Client Model get messages.

Note If you want to find the opcodes and corresponding meanings accepted by this API, please refer to esp_ble_mesh_opcode_health_client_get_t in esp_ble_mesh_defs.h

Return ESP_OK on success or error code otherwise.

Parameters

- `[in] params`: Pointer to BLE Mesh common client parameters.
- `[in] get_state`: Pointer to a union, each kind of opcode corresponds to one structure inside. Shall not be set to NULL.

esp_err_t **esp_ble_mesh_health_client_set_state**(*esp_ble_mesh_client_common_param_t* **params*, *esp_ble_mesh_health_client_set_state_t* **set_state*)

This function is called to set the Health Server states using the Health Client Model set messages.

Note If you want to find the opcodes and corresponding meanings accepted by this API, please refer to esp_ble_mesh_opcode_health_client_set_t in esp_ble_mesh_defs.h

Return ESP_OK on success or error code otherwise.

Parameters

- `[in] params`: Pointer to BLE Mesh common client parameters.
- `[in] set_state`: Pointer to a union, each kind of opcode corresponds to one structure inside. Shall not be set to NULL.

esp_err_t **esp_ble_mesh_health_server_fault_update** (*esp_ble_mesh_elem_t* **element*)

This function is called by the Health Server Model to update the context of its Health Current status.

Return ESP_OK on success or error code otherwise.

Parameters

- `[in] element`: The element to which the Health Server Model belongs.

Unions

union esp_ble_mesh_health_client_get_state_t

#include <esp_ble_mesh_health_model_api.h> For ESP_BLE_MESH_MODEL_OP_HEALTH_FAULT_GET ESP_BLE_MESH_MODEL_OP_ATTENTION_GET ESP_BLE_MESH_MODEL_OP_HEALTH_PERIOD_GET the get_state parameter in the esp_ble_mesh_health_client_get_state function should not be set to NULL.

Public Members

esp_ble_mesh_health_fault_get_t **fault_get**

For ESP_BLE_MESH_MODEL_OP_HEALTH_FAULT_GET.

union esp_ble_mesh_health_client_set_state_t

#include <esp_ble_mesh_health_model_api.h> For ESP_BLE_MESH_MODEL_OP_HEALTH_FAULT_CLEAR ESP_BLE_MESH_MODEL_OP_HEALTH_FAULT_CLEAR_UNACK ESP_BLE_MESH_MODEL_OP_HEALTH_FAULT ESP_BLE_MESH_MODEL_OP_HEALTH_FAULT_TEST_UNACK ESP_BLE_MESH_MODEL_OP_HEALTH_PERIOD ESP_BLE_MESH_MODEL_OP_HEALTH_PERIOD_SET_UNACK ESP_BLE_MESH_MODEL_OP_ATTENTION_SET ESP_BLE_MESH_MODEL_OP_ATTENTION_SET_UNACK the set_state parameter in the esp_ble_mesh_health_client_set_state function should not be set to NULL.

Public Members

esp_ble_mesh_health_attention_set_t **attention_set**

For ESP_BLE_MESH_MODEL_OP_ATTENTION_SET or ESP_BLE_MESH_MODEL_OP_ATTENTION_SET_UNA

esp_ble_mesh_health_period_set_t **period_set**

For ESP_BLE_MESH_MODEL_OP_HEALTH_PERIOD_SET or ESP_BLE_MESH_MODEL_OP_HEALTH_PERIOD_SET_UNACK.

esp_ble_mesh_health_fault_test_t **fault_test**

For ESP_BLE_MESH_MODEL_OP_HEALTH_FAULT_TEST or ESP_BLE_MESH_MODEL_OP_HEALTH_FAULT_TEST_UNACK.

esp_ble_mesh_health_fault_clear_t **fault_clear**

For ESP_BLE_MESH_MODEL_OP_HEALTH_FAULT_CLEAR or ESP_BLE_MESH_MODEL_OP_HEALTH_FAULT_CLEAR_UNACK.

union esp_ble_mesh_health_client_common_cb_param_t

#include <esp_ble_mesh_health_model_api.h> Health Client Model received message union.

Public Members

esp_ble_mesh_health_current_status_cb_t **current_status**

The health current status value

esp_ble_mesh_health_fault_status_cb_t **fault_status**
The health fault status value

esp_ble_mesh_health_period_status_cb_t **period_status**
The health period status value

esp_ble_mesh_health_attention_status_cb_t **attention_status**
The health attention status value

union esp_ble_mesh_health_server_cb_param_t
#include <esp_ble_mesh_health_model_api.h> Health Server Model callback parameters union.

Public Members

esp_ble_mesh_health_fault_update_comp_cb_t **fault_update_comp**
ESP_BLE_MESH_HEALTH_SERVER_FAULT_UPDATE_COMP_EVT

esp_ble_mesh_health_fault_clear_cb_t **fault_clear**
ESP_BLE_MESH_HEALTH_SERVER_FAULT_CLEAR_EVT

esp_ble_mesh_health_fault_test_cb_t **fault_test**
ESP_BLE_MESH_HEALTH_SERVER_FAULT_TEST_EVT

esp_ble_mesh_health_attention_on_cb_t **attention_on**
ESP_BLE_MESH_HEALTH_SERVER_ATTENTION_ON_EVT

esp_ble_mesh_health_attention_off_cb_t **attention_off**
ESP_BLE_MESH_HEALTH_SERVER_ATTENTION_OFF_EVT

Structures

struct esp_ble_mesh_health_srv_cb_t
ESP BLE Mesh Health Server callback

Public Members

esp_ble_mesh_cb_t **fault_clear**
Clear health registered faults. Initialized by the stack.

esp_ble_mesh_cb_t **fault_test**
Run a specific health test. Initialized by the stack.

esp_ble_mesh_cb_t **attention_on**
Health attention on callback. Initialized by the stack.

esp_ble_mesh_cb_t **attention_off**
Health attention off callback. Initialized by the stack.

struct esp_ble_mesh_health_test_t
ESP BLE Mesh Health Server test Context

Public Members

uint8_t **id_count**
Number of Health self-test ID

const uint8_t ***test_ids**
Array of Health self-test IDs

uint16_t **company_id**
Company ID used to identify the Health Fault state

uint8_t **prev_test_id**
Current test ID of the health fault test

uint8_t **current_faults**[**ESP_BLE_MESH_HEALTH_FAULT_ARRAY_SIZE**]
Array of current faults

uint8_t **registered_faults**[**ESP_BLE_MESH_HEALTH_FAULT_ARRAY_SIZE**]
Array of registered faults

struct esp_ble_mesh_health_srv_t
ESP BLE Mesh Health Server Model Context

Public Members

esp_ble_mesh_model_t ***model**
Pointer to Health Server Model

esp_ble_mesh_health_srv_cb_t **health_cb**
Health callback struct

struct k_delayed_work **attention_timer**
Attention Timer state

bool **attention_timer_start**
Attention Timer start flag

esp_ble_mesh_health_test_t **health_test**
Health Server fault test

struct esp_ble_mesh_health_fault_get_t
Parameter of Health Fault Get

Public Members

uint16_t **company_id**
Bluetooth assigned 16-bit Company ID

struct esp_ble_mesh_health_attention_set_t
Parameter of Health Attention Set

Public Members

uint8_t **attention**
Value of the Attention Timer state

struct esp_ble_mesh_health_period_set_t
Parameter of Health Period Set

Public Members

uint8_t **fast_period_divisor**
Divider for the Publish Period

struct esp_ble_mesh_health_fault_test_t
Parameter of Health Fault Test

Public Members

uint16_t **company_id**
Bluetooth assigned 16-bit Company ID

uint8_t **test_id**
ID of a specific test to be performed

struct esp_ble_mesh_health_fault_clear_t
Parameter of Health Fault Clear

Public Members

uint16_t **company_id**
Bluetooth assigned 16-bit Company ID

struct esp_ble_mesh_health_current_status_cb_t
Parameters of Health Current Status

Public Members

uint8_t **test_id**
ID of a most recently performed test

uint16_t **company_id**
Bluetooth assigned 16-bit Company ID

struct net_buf_simple ***fault_array**
FaultArray field contains a sequence of 1-octet fault values

struct esp_ble_mesh_health_fault_status_cb_t
Parameters of Health Fault Status

Public Members

uint8_t **test_id**
ID of a most recently performed test

uint16_t **company_id**
Bluetooth assigned 16-bit Company ID

struct net_buf_simple ***fault_array**
FaultArray field contains a sequence of 1-octet fault values

struct esp_ble_mesh_health_period_status_cb_t
Parameter of Health Period Status

Public Members

uint8_t **fast_period_divisor**
Divider for the Publish Period

struct esp_ble_mesh_health_attention_status_cb_t
Parameter of Health Attention Status

Public Members

uint8_t **attention**
Value of the Attention Timer state

struct esp_ble_mesh_health_client_cb_param_t
Health Client Model callback parameters

Public Members

int **error_code**
Appropriate error code

esp_ble_mesh_client_common_param_t ***params**
The client common parameters.

esp_ble_mesh_health_client_common_cb_param_t **status_cb**
The health message status callback values

struct esp_ble_mesh_health_fault_update_comp_cb_t
Parameter of publishing Health Current Status completion event

Public Members

int **error_code**
The result of publishing Health Current Status

esp_ble_mesh_elem_t ***element**
Pointer to the element which contains the Health Server Model

struct esp_ble_mesh_health_fault_clear_cb_t
Parameters of Health Fault Clear event

Public Members

esp_ble_mesh_model_t ***model**
Pointer to the Health Server Model

uint16_t **company_id**
Bluetooth assigned 16-bit Company ID

struct esp_ble_mesh_health_fault_test_cb_t
Parameters of Health Fault Test event

Public Members

esp_ble_mesh_model_t ***model**
Pointer to the Health Server Model

uint8_t **test_id**
ID of a specific test to be performed

uint16_t **company_id**
Bluetooth assigned 16-bit Company ID

struct esp_ble_mesh_health_attention_on_cb_t
Parameter of Health Attention On event

Public Members

esp_ble_mesh_model_t ***model**
Pointer to the Health Server Model

uint8_t **time**
Duration of attention timer on (in seconds)

struct esp_ble_mesh_health_attention_off_cb_t
Parameter of Health Attention Off event

Public Members

esp_ble_mesh_model_t ***model**
Pointer to the Health Server Model

Macros

ESP_BLE_MESH_MODEL_HEALTH_SRV(srv, pub)
Define a new Health Server Model.

Note The Health Server Model can only be included by a Primary Element.
Return New Health Server Model instance.
Parameters
- `srv`: Pointer to the unique struct *esp_ble_mesh_health_srv_t*.
- `pub`: Pointer to the unique struct *esp_ble_mesh_model_pub_t*.

ESP_BLE_MESH_MODEL_HEALTH_CLI(cli_data)
Define a new Health Client Model.

Note This API needs to be called for each element on which the application needs to have a Health Client Model.
Return New Health Client Model instance.
Parameters
- `cli_data`: Pointer to the unique struct *esp_ble_mesh_client_t*.

ESP_BLE_MESH_HEALTH_PUB_DEFINE(_name, _max, _role)
A helper to define a health publication context

Parameters
- `_name`: Name given to the publication context variable.
- `_max`: Maximum number of faults the element can have.
- `_role`: Role of the device which contains the model.

ESP_BLE_MESH_HEALTH_STANDARD_TEST
SIG identifier of Health Fault Test. 0x01 ~ 0xFF: Vendor Specific Test.

ESP_BLE_MESH_NO_FAULT
Fault values of Health Fault Test. 0x33 ~ 0x7F: Reserved for Future Use. 0x80 ~ 0xFF: Vendor Specific Warning/Error.

ESP_BLE_MESH_BATTERY_LOW_WARNING

ESP_BLE_MESH_BATTERY_LOW_ERROR

ESP_BLE_MESH_SUPPLY_VOLTAGE_TOO_LOW_WARNING

ESP_BLE_MESH_SUPPLY_VOLTAGE_TOO_LOW_ERROR

ESP_BLE_MESH_SUPPLY_VOLTAGE_TOO_HIGH_WARNING

ESP_BLE_MESH_SUPPLY_VOLTAGE_TOO_HIGH_ERROR

ESP_BLE_MESH_POWER_SUPPLY_INTERRUPTED_WARNING

ESP_BLE_MESH_POWER_SUPPLY_INTERRUPTED_ERROR

ESP_BLE_MESH_NO_LOAD_WARNING

ESP_BLE_MESH_NO_LOAD_ERROR

ESP_BLE_MESH_OVERLOAD_WARNING

ESP_BLE_MESH_OVERLOAD_ERROR

ESP_BLE_MESH_OVERHEAT_WARNING

ESP_BLE_MESH_OVERHEAT_ERROR

ESP_BLE_MESH_CONDENSATION_WARNING

ESP_BLE_MESH_CONDENSATION_ERROR

ESP_BLE_MESH_VIBRATION_WARNING

ESP_BLE_MESH_VIBRATION_ERROR

ESP_BLE_MESH_CONFIGURATION_WARNING

ESP_BLE_MESH_CONFIGURATION_ERROR

ESP_BLE_MESH_ELEMENT_NOT_CALIBRATED_WARNING

ESP_BLE_MESH_ELEMENT_NOT_CALIBRATED_ERROR

ESP_BLE_MESH_MEMORY_WARNING

ESP_BLE_MESH_MEMORY_ERROR

ESP_BLE_MESH_SELF_TEST_WARNING

ESP_BLE_MESH_SELF_TEST_ERROR

ESP_BLE_MESH_INPUT_TOO_LOW_WARNING

ESP_BLE_MESH_INPUT_TOO_LOW_ERROR

ESP_BLE_MESH_INPUT_TOO_HIGH_WARNING

ESP_BLE_MESH_INPUT_TOO_HIGH_ERROR

ESP_BLE_MESH_INPUT_NO_CHANGE_WARNING

ESP_BLE_MESH_INPUT_NO_CHANGE_ERROR

ESP_BLE_MESH_ACTUATOR_BLOCKED_WARNING

ESP_BLE_MESH_ACTUATOR_BLOCKED_ERROR

ESP_BLE_MESH_HOUSING_OPENED_WARNING

ESP_BLE_MESH_HOUSING_OPENED_ERROR

ESP_BLE_MESH_TAMPER_WARNING

ESP_BLE_MESH_TAMPER_ERROR

ESP_BLE_MESH_DEVICE_MOVED_WARNING

ESP_BLE_MESH_DEVICE_MOVED_ERROR

ESP_BLE_MESH_DEVICE_DROPPED_WARNING

ESP_BLE_MESH_DEVICE_DROPPED_ERROR

ESP_BLE_MESH_OVERFLOW_WARNING

ESP_BLE_MESH_OVERFLOW_ERROR

ESP_BLE_MESH_EMPTY_WARNING

ESP_BLE_MESH_EMPTY_ERROR

ESP_BLE_MESH_INTERNAL_BUS_WARNING

ESP_BLE_MESH_INTERNAL_BUS_ERROR

ESP_BLE_MESH_MECHANISM_JAMMED_WARNING

ESP_BLE_MESH_MECHANISM_JAMMED_ERROR

ESP_BLE_MESH_HEALTH_FAULT_ARRAY_SIZE

Type Definitions

typedef void (***esp_ble_mesh_health_client_cb_t**)(*esp_ble_mesh_health_client_cb_event_t* event, *esp_ble_mesh_health_client_cb_param_t* *param)

Bluetooth Mesh Health Client and Server Model function.

Health Client Model callback function type

Parameters

- `event`: Event type
- `param`: Pointer to callback parameter

typedef void (***esp_ble_mesh_health_server_cb_t**)(*esp_ble_mesh_health_server_cb_event_t* event, *esp_ble_mesh_health_server_cb_param_t* *param)

Health Server Model callback function type.

Parameters

- `event`: Event type
- `param`: Pointer to callback parameter

Enumerations

enum esp_ble_mesh_health_client_cb_event_t

This enum value is the event of Health Client Model

Values:

ESP_BLE_MESH_HEALTH_CLIENT_GET_STATE_EVT

ESP_BLE_MESH_HEALTH_CLIENT_SET_STATE_EVT

ESP_BLE_MESH_HEALTH_CLIENT_PUBLISH_EVT

ESP_BLE_MESH_HEALTH_CLIENT_TIMEOUT_EVT

ESP_BLE_MESH_HEALTH_CLIENT_EVT_MAX

enum esp_ble_mesh_health_server_cb_event_t

This enum value is the event of Health Server Model

Values:

ESP_BLE_MESH_HEALTH_SERVER_FAULT_UPDATE_COMP_EVT

ESP_BLE_MESH_HEALTH_SERVER_FAULT_CLEAR_EVT

ESP_BLE_MESH_HEALTH_SERVER_FAULT_TEST_EVT

ESP_BLE_MESH_HEALTH_SERVER_ATTENTION_ON_EVT

ESP_BLE_MESH_HEALTH_SERVER_ATTENTION_OFF_EVT

ESP_BLE_MESH_HEALTH_SERVER_EVT_MAX

Generic Client/Server Models

Header File

- bt/esp_ble_mesh/api/models/include/esp_ble_mesh_generic_model_api.h

Functions

esp_err_t **esp_ble_mesh_register_generic_client_callback**(*esp_ble_mesh_generic_client_cb_t callback*)

Register BLE Mesh Generic Client Model callback.

Return ESP_OK on success or error code otherwise.

Parameters

- `[in] callback`: Pointer to the callback function.

esp_err_t **esp_ble_mesh_generic_client_get_state**(*esp_ble_mesh_client_common_param_t* **params*, *esp_ble_mesh_generic_client_get_state_t* **get_state*)

Get the value of Generic Server Model states using the Generic Client Model get messages.

Note If you want to find the opcodes and corresponding meanings accepted by this API, please refer to esp_ble_mesh_generic_message_opcode_t in esp_ble_mesh_defs.h

Return ESP_OK on success or error code otherwise.

Parameters

- `[in] params`: Pointer to BLE Mesh common client parameters.
- `[in] get_state`: Pointer to generic get message value. Shall not be set to NULL.

esp_err_t **esp_ble_mesh_generic_client_set_state**(*esp_ble_mesh_client_common_param_t* **params*, *esp_ble_mesh_generic_client_set_state_t* **set_state*)

Set the value of Generic Server Model states using the Generic Client Model set messages.

Note If you want to find the opcodes and corresponding meanings accepted by this API, please refer to esp_ble_mesh_generic_message_opcode_t in esp_ble_mesh_defs.h

Return ESP_OK on success or error code otherwise.

Parameters

- `[in] params`: Pointer to BLE Mesh common client parameters.
- `[in] set_state`: Pointer to generic set message value. Shall not be set to NULL.

esp_err_t **esp_ble_mesh_register_generic_server_callback**(*esp_ble_mesh_generic_server_cb_t* *callback*)

Register BLE Mesh Generic Server Model callback.

Return ESP_OK on success or error code otherwise.

Parameters

- `[in] callback`: Pointer to the callback function.

Unions

union esp_ble_mesh_generic_client_get_state_t

#include <esp_ble_mesh_generic_model_api.h> Generic Client Model get message union.

Public Members

esp_ble_mesh_gen_user_property_get_t **user_property_get**

For ESP_BLE_MESH_MODEL_OP_GEN_USER_PROPERTY_GET

esp_ble_mesh_gen_admin_property_get_t **admin_property_get**

For ESP_BLE_MESH_MODEL_OP_GEN_ADMIN_PROPERTY_GET

esp_ble_mesh_gen_manufacturer_property_get_t **manufacturer_property_get**

For ESP_BLE_MESH_MODEL_OP_GEN_MANUFACTURER_PROPERTY_SET

esp_ble_mesh_gen_client_properties_get_t **client_properties_get**

For ESP_BLE_MESH_MODEL_OP_GEN_CLIENT_PROPERTIES_GET

union esp_ble_mesh_generic_client_set_state_t

#include <esp_ble_mesh_generic_model_api.h> Generic Client Model set message union.

Public Members

esp_ble_mesh_gen_onoff_set_t **onoff_set**

For ESP_BLE_MESH_MODEL_OP_GEN_ONOFF_SET & ESP_BLE_MESH_MODEL_OP_GEN_ONOFF_SET_UN

esp_ble_mesh_gen_level_set_t **level_set**
For ESP_BLE_MESH_MODEL_OP_GEN_LEVEL_SET & ESP_BLE_MESH_MODEL_OP_GEN_LEVEL_SET_UN

esp_ble_mesh_gen_delta_set_t **delta_set**
For ESP_BLE_MESH_MODEL_OP_GEN_DELTA_SET & ESP_BLE_MESH_MODEL_OP_GEN_DELTA_SET_UN

esp_ble_mesh_gen_move_set_t **move_set**
For ESP_BLE_MESH_MODEL_OP_GEN_MOVE_SET & ESP_BLE_MESH_MODEL_OP_GEN_MOVE_SET_UNA

esp_ble_mesh_gen_def_trans_time_set_t **def_trans_time_set**
For ESP_BLE_MESH_MODEL_OP_GEN_DEF_TRANS_TIME_SET & ESP_BLE_MESH_MODEL_OP_GEN_DEF_TRANS_TIME_SET_UNACK

esp_ble_mesh_gen_onpowerup_set_t **power_set**
For ESP_BLE_MESH_MODEL_OP_GEN_ONPOWERUP_SET & ESP_BLE_MESH_MODEL_OP_GEN_ONPOWERUP_SET_UNACK

esp_ble_mesh_gen_power_level_set_t **power_level_set**
For ESP_BLE_MESH_MODEL_OP_GEN_POWER_LEVEL_SET & ESP_BLE_MESH_MODEL_OP_GEN_POWER_LEVEL_SET_UNACK

esp_ble_mesh_gen_power_default_set_t **power_default_set**
For ESP_BLE_MESH_MODEL_OP_GEN_POWER_DEFAULT_SET & ESP_BLE_MESH_MODEL_OP_GEN_POWER_DEFAULT_SET_UNACK

esp_ble_mesh_gen_power_range_set_t **power_range_set**
For ESP_BLE_MESH_MODEL_OP_GEN_POWER_RANGE_SET & ESP_BLE_MESH_MODEL_OP_GEN_POWER_RANGE_SET_UNACK

esp_ble_mesh_gen_loc_global_set_t **loc_global_set**
For ESP_BLE_MESH_MODEL_OP_GEN_LOC_GLOBAL_SET & ESP_BLE_MESH_MODEL_OP_GEN_LOC_GLOBAL_SET_UNACK

esp_ble_mesh_gen_loc_local_set_t **loc_local_set**
For ESP_BLE_MESH_MODEL_OP_GEN_LOC_LOCAL_SET & ESP_BLE_MESH_MODEL_OP_GEN_LOC_LOCAL_SET_UNACK

esp_ble_mesh_gen_user_property_set_t **user_property_set**
For ESP_BLE_MESH_MODEL_OP_GEN_USER_PROPERTY_SET & ESP_BLE_MESH_MODEL_OP_GEN_USER_PROPERTY_SET_UNACK

esp_ble_mesh_gen_admin_property_set_t **admin_property_set**
For ESP_BLE_MESH_MODEL_OP_GEN_ADMIN_PROPERTY_SET & ESP_BLE_MESH_MODEL_OP_GEN_ADMIN_PROPERTY_SET_UNACK

esp_ble_mesh_gen_manufacturer_property_set_t **manufacturer_property_set**
For ESP_BLE_MESH_MODEL_OP_GEN_MANUFACTURER_PROPERTY_SET & ESP_BLE_MESH_MODEL_OP_GEN_MANUFACTURER_PROPERTY_SET_UNACK

union esp_ble_mesh_gen_client_status_cb_t
#include <esp_ble_mesh_generic_model_api.h> Generic Client Model received message union.

Public Members

esp_ble_mesh_gen_onoff_status_cb_t **onoff_status**
For ESP_BLE_MESH_MODEL_OP_GEN_ONOFF_STATUS

esp_ble_mesh_gen_level_status_cb_t **level_status**
For ESP_BLE_MESH_MODEL_OP_GEN_LEVEL_STATUS

esp_ble_mesh_gen_def_trans_time_status_cb_t **def_trans_time_status**
For ESP_BLE_MESH_MODEL_OP_GEN_DEF_TRANS_TIME_STATUS

esp_ble_mesh_gen_onpowerup_status_cb_t **onpowerup_status**
For ESP_BLE_MESH_MODEL_OP_GEN_ONPOWERUP_STATUS

esp_ble_mesh_gen_power_level_status_cb_t **power_level_status**
For ESP_BLE_MESH_MODEL_OP_GEN_POWER_LEVEL_STATUS

esp_ble_mesh_gen_power_last_status_cb_t **power_last_status**
For ESP_BLE_MESH_MODEL_OP_GEN_POWER_LAST_STATUS

esp_ble_mesh_gen_power_default_status_cb_t **power_default_status**
For ESP_BLE_MESH_MODEL_OP_GEN_POWER_DEFAULT_STATUS

esp_ble_mesh_gen_power_range_status_cb_t **power_range_status**
For ESP_BLE_MESH_MODEL_OP_GEN_POWER_RANGE_STATUS

esp_ble_mesh_gen_battery_status_cb_t **battery_status**
For ESP_BLE_MESH_MODEL_OP_GEN_BATTERY_STATUS

esp_ble_mesh_gen_loc_global_status_cb_t **location_global_status**
For ESP_BLE_MESH_MODEL_OP_GEN_LOC_GLOBAL_STATUS

esp_ble_mesh_gen_loc_local_status_cb_t **location_local_status**
ESP_BLE_MESH_MODEL_OP_GEN_LOC_LOCAL_STATUS

esp_ble_mesh_gen_user_properties_status_cb_t **user_properties_status**
ESP_BLE_MESH_MODEL_OP_GEN_USER_PROPERTIES_STATUS

esp_ble_mesh_gen_user_property_status_cb_t **user_property_status**
ESP_BLE_MESH_MODEL_OP_GEN_USER_PROPERTY_STATUS

esp_ble_mesh_gen_admin_properties_status_cb_t **admin_properties_status**
ESP_BLE_MESH_MODEL_OP_GEN_ADMIN_PROPERTIES_STATUS

esp_ble_mesh_gen_admin_property_status_cb_t **admin_property_status**
ESP_BLE_MESH_MODEL_OP_GEN_ADMIN_PROPERTY_STATUS

esp_ble_mesh_gen_manufacturer_properties_status_cb_t **manufacturer_properties_status**
ESP_BLE_MESH_MODEL_OP_GEN_MANUFACTURER_PROPERTIES_STATUS

esp_ble_mesh_gen_manufacturer_property_status_cb_t **manufacturer_property_status**
ESP_BLE_MESH_MODEL_OP_GEN_MANUFACTURER_PROPERTY_STATUS

esp_ble_mesh_gen_client_properties_status_cb_t **client_properties_status**
ESP_BLE_MESH_MODEL_OP_GEN_CLIENT_PROPERTIES_STATUS

union esp_ble_mesh_generic_server_state_change_t
#include <esp_ble_mesh_generic_model_api.h> Generic Server Model state change value union.

Public Members

esp_ble_mesh_state_change_gen_onoff_set_t **onoff_set**
The recv_op in ctx can be used to decide which state is changed.Generic OnOff Set

esp_ble_mesh_state_change_gen_level_set_t **level_set**
Generic Level Set

esp_ble_mesh_state_change_gen_delta_set_t **delta_set**
Generic Delta Set

esp_ble_mesh_state_change_gen_move_set_t **move_set**
Generic Move Set

esp_ble_mesh_state_change_gen_def_trans_time_set_t **def_trans_time_set**
Generic Default Transition Time Set

esp_ble_mesh_state_change_gen_onpowerup_set_t **onpowerup_set**
Generic OnPowerUp Set

esp_ble_mesh_state_change_gen_power_level_set_t **power_level_set**
Generic Power Level Set

esp_ble_mesh_state_change_gen_power_default_set_t **power_default_set**
Generic Power Default Set

esp_ble_mesh_state_change_gen_power_range_set_t **power_range_set**
Generic Power Range Set

esp_ble_mesh_state_change_gen_loc_global_set_t **loc_global_set**
Generic Location Global Set

esp_ble_mesh_state_change_gen_loc_local_set_t **loc_local_set**
Generic Location Local Set

esp_ble_mesh_state_change_gen_user_property_set_t **user_property_set**
Generic User Property Set

esp_ble_mesh_state_change_gen_admin_property_set_t **admin_property_set**
Generic Admin Property Set

esp_ble_mesh_state_change_gen_manu_property_set_t **manu_property_set**
Generic Manufacturer Property Set

union esp_ble_mesh_generic_server_recv_get_msg_t
#include <esp_ble_mesh_generic_model_api.h> Generic Server Model received get message union.

Public Members

esp_ble_mesh_server_recv_gen_user_property_get_t **user_property**
Generic User Property Get

esp_ble_mesh_server_recv_gen_admin_property_get_t **admin_property**
Generic Admin Property Get

esp_ble_mesh_server_recv_gen_manufacturer_property_get_t **manu_property**
Generic Manufacturer Property Get

esp_ble_mesh_server_recv_gen_client_properties_get_t **client_properties**
Generic Client Properties Get

union esp_ble_mesh_generic_server_recv_set_msg_t
#include <esp_ble_mesh_generic_model_api.h> Generic Server Model received set message union.

Public Members

esp_ble_mesh_server_recv_gen_onoff_set_t **onoff**
Generic OnOff Set/Generic OnOff Set Unack

esp_ble_mesh_server_recv_gen_level_set_t **level**
Generic Level Set/Generic Level Set Unack

esp_ble_mesh_server_recv_gen_delta_set_t **delta**
Generic Delta Set/Generic Delta Set Unack

esp_ble_mesh_server_recv_gen_move_set_t **move**
Generic Move Set/Generic Move Set Unack

esp_ble_mesh_server_recv_gen_def_trans_time_set_t **def_trans_time**
Generic Default Transition Time Set/Generic Default Transition Time Set Unack

esp_ble_mesh_server_recv_gen_onpowerup_set_t **onpowerup**
Generic OnPowerUp Set/Generic OnPowerUp Set Unack

esp_ble_mesh_server_recv_gen_power_level_set_t **power_level**
Generic Power Level Set/Generic Power Level Set Unack

esp_ble_mesh_server_recv_gen_power_default_set_t **power_default**
Generic Power Default Set/Generic Power Default Set Unack

esp_ble_mesh_server_recv_gen_power_range_set_t **power_range**
Generic Power Range Set/Generic Power Range Set Unack

esp_ble_mesh_server_recv_gen_loc_global_set_t **location_global**
Generic Location Global Set/Generic Location Global Set Unack

esp_ble_mesh_server_recv_gen_loc_local_set_t **location_local**
Generic Location Local Set/Generic Location Local Set Unack

esp_ble_mesh_server_recv_gen_user_property_set_t **user_property**
Generic User Property Set/Generic User Property Set Unack

esp_ble_mesh_server_recv_gen_admin_property_set_t **admin_property**
Generic Admin Property Set/Generic Admin Property Set Unack

esp_ble_mesh_server_recv_gen_manufacturer_property_set_t **manu_property**
Generic Manufacturer Property Set/Generic Manufacturer Property Set Unack

union esp_ble_mesh_generic_server_cb_value_t
#include <esp_ble_mesh_generic_model_api.h> Generic Server Model callback value union.

Public Members

esp_ble_mesh_generic_server_state_change_t **state_change**
ESP_BLE_MESH_GENERIC_SERVER_STATE_CHANGE_EVT

esp_ble_mesh_generic_server_recv_get_msg_t **get**
ESP_BLE_MESH_GENERIC_SERVER_RECV_GET_MSG_EVT

esp_ble_mesh_generic_server_recv_set_msg_t **set**
ESP_BLE_MESH_GENERIC_SERVER_RECV_SET_MSG_EVT

Structures

struct esp_ble_mesh_gen_onoff_set_t
Bluetooth Mesh Generic Client Model Get and Set parameters structure.

Parameters of Generic OnOff Set.

Public Members

bool **op_en**
Indicate if optional parameters are included

uint8_t **onoff**
Target value of Generic OnOff state

uint8_t **tid**
Transaction ID

uint8_t **trans_time**
Time to complete state transition (optional)

uint8_t **delay**
Indicate message execution delay (C.1)

struct esp_ble_mesh_gen_level_set_t
Parameters of Generic Level Set.

Public Members

bool **op_en**
Indicate if optional parameters are included

int16_t **level**
Target value of Generic Level state

uint8_t **tid**
Transaction ID

uint8_t **trans_time**
Time to complete state transition (optional)

uint8_t **delay**
Indicate message execution delay (C.1)

struct esp_ble_mesh_gen_delta_set_t
Parameters of Generic Delta Set.

Public Members

bool **op_en**
Indicate if optional parameters are included

int32_t **level**
Delta change of Generic Level state

uint8_t **tid**
Transaction ID

uint8_t **trans_time**
Time to complete state transition (optional)

uint8_t **delay**
Indicate message execution delay (C.1)

struct esp_ble_mesh_gen_move_set_t
Parameters of Generic Move Set.

Public Members

bool **op_en**
Indicate if optional parameters are included

int16_t **delta_level**
Delta Level step to calculate Move speed for Generic Level state

uint8_t **tid**
Transaction ID

uint8_t **trans_time**
Time to complete state transition (optional)

uint8_t **delay**
Indicate message execution delay (C.1)

struct esp_ble_mesh_gen_def_trans_time_set_t
Parameter of Generic Default Transition Time Set.

Public Members

uint8_t **trans_time**
The value of the Generic Default Transition Time state

struct esp_ble_mesh_gen_onpowerup_set_t
Parameter of Generic OnPowerUp Set.

Public Members

uint8_t **onpowerup**
The value of the Generic OnPowerUp state

struct esp_ble_mesh_gen_power_level_set_t
Parameters of Generic Power Level Set.

Public Members

bool **op_en**
Indicate if optional parameters are included

uint16_t **power**
Target value of Generic Power Actual state

uint8_t **tid**
Transaction ID

uint8_t **trans_time**
Time to complete state transition (optional)

uint8_t **delay**
Indicate message execution delay (C.1)

struct esp_ble_mesh_gen_power_default_set_t
Parameter of Generic Power Default Set.

Public Members

uint16_t **power**
The value of the Generic Power Default state

struct esp_ble_mesh_gen_power_range_set_t
Parameters of Generic Power Range Set.

Public Members

uint16_t **range_min**
Value of Range Min field of Generic Power Range state

uint16_t **range_max**
Value of Range Max field of Generic Power Range state

struct esp_ble_mesh_gen_loc_global_set_t
Parameters of Generic Location Global Set.

Public Members

int32_t **global_latitude**
Global Coordinates (Latitude)

int32_t **global_longitude**
Global Coordinates (Longitude)

int16_t **global_altitude**
Global Altitude

struct esp_ble_mesh_gen_loc_local_set_t
Parameters of Generic Location Local Set.

Public Members

int16_t **local_north**
Local Coordinates (North)

int16_t **local_east**
Local Coordinates (East)

int16_t **local_altitude**
Local Altitude

uint8_t **floor_number**
Floor Number

uint16_t **uncertainty**
Uncertainty

struct esp_ble_mesh_gen_user_property_get_t
Parameter of Generic User Property Get.

Public Members

uint16_t **property_id**
Property ID identifying a Generic User Property

struct esp_ble_mesh_gen_user_property_set_t
Parameters of Generic User Property Set.

Public Members

uint16_t **property_id**
Property ID identifying a Generic User Property

struct net_buf_simple ***property_value**
Raw value for the User Property

struct esp_ble_mesh_gen_admin_property_get_t
Parameter of Generic Admin Property Get.

Public Members

uint16_t **property_id**
Property ID identifying a Generic Admin Property

struct esp_ble_mesh_gen_admin_property_set_t
Parameters of Generic Admin Property Set.

Public Members

uint16_t **property_id**
Property ID identifying a Generic Admin Property

uint8_t **user_access**
Enumeration indicating user access

struct net_buf_simple ***property_value**
Raw value for the Admin Property

struct esp_ble_mesh_gen_manufacturer_property_get_t
Parameter of Generic Manufacturer Property Get.

Public Members

uint16_t **property_id**
Property ID identifying a Generic Manufacturer Property

struct esp_ble_mesh_gen_manufacturer_property_set_t
Parameters of Generic Manufacturer Property Set.

Public Members

uint16_t **property_id**
Property ID identifying a Generic Manufacturer Property

uint8_t **user_access**
Enumeration indicating user access

struct esp_ble_mesh_gen_client_properties_get_t
Parameter of Generic Client Properties Get.

Public Members

uint16_t **property_id**
A starting Client Property ID present within an element

struct esp_ble_mesh_gen_onoff_status_cb_t
Bluetooth Mesh Generic Client Model Get and Set callback parameters structure.

Parameters of Generic OnOff Status.

Public Members

bool **op_en**
Indicate if optional parameters are included

uint8_t **present_onoff**
Current value of Generic OnOff state

uint8_t **target_onoff**
Target value of Generic OnOff state (optional)

uint8_t **remain_time**
Time to complete state transition (C.1)

struct esp_ble_mesh_gen_level_status_cb_t
Parameters of Generic Level Status.

Public Members

bool **op_en**
Indicate if optional parameters are included

int16_t **present_level**
Current value of Generic Level state

int16_t **target_level**
Target value of the Generic Level state (optional)

uint8_t **remain_time**
Time to complete state transition (C.1)

struct esp_ble_mesh_gen_def_trans_time_status_cb_t
Parameter of Generic Default Transition Time Status.

Public Members

uint8_t **trans_time**
The value of the Generic Default Transition Time state

struct esp_ble_mesh_gen_onpowerup_status_cb_t
Parameter of Generic OnPowerUp Status.

Public Members

uint8_t **onpowerup**
The value of the Generic OnPowerUp state

struct esp_ble_mesh_gen_power_level_status_cb_t
Parameters of Generic Power Level Status.

Public Members

bool **op_en**
Indicate if optional parameters are included

uint16_t **present_power**
Current value of Generic Power Actual state

uint16_t **target_power**
Target value of Generic Power Actual state (optional)

uint8_t **remain_time**
Time to complete state transition (C.1)

struct esp_ble_mesh_gen_power_last_status_cb_t
Parameter of Generic Power Last Status.

Public Members

uint16_t **power**
The value of the Generic Power Last state

struct esp_ble_mesh_gen_power_default_status_cb_t
Parameter of Generic Power Default Status.

Public Members

uint16_t **power**
The value of the Generic Default Last state

struct esp_ble_mesh_gen_power_range_status_cb_t
Parameters of Generic Power Range Status.

Public Members

uint8_t **status_code**
Status Code for the request message

uint16_t **range_min**
Value of Range Min field of Generic Power Range state

uint16_t **range_max**
Value of Range Max field of Generic Power Range state

struct esp_ble_mesh_gen_battery_status_cb_t
Parameters of Generic Battery Status.

Public Members

uint32_t **battery_level** : 8
Value of Generic Battery Level state

uint32_t **time_to_discharge** : 24
Value of Generic Battery Time to Discharge state

uint32_t **time_to_charge** : 24
Value of Generic Battery Time to Charge state

uint32_t **flags** : 8
Value of Generic Battery Flags state

struct esp_ble_mesh_gen_loc_global_status_cb_t
Parameters of Generic Location Global Status.

Public Members

int32_t **global_latitude**
Global Coordinates (Latitude)

int32_t **global_longitude**
Global Coordinates (Longitude)

int16_t **global_altitude**
Global Altitude

struct esp_ble_mesh_gen_loc_local_status_cb_t
Parameters of Generic Location Local Status.

Public Members

int16_t **local_north**
Local Coordinates (North)

int16_t **local_east**
Local Coordinates (East)

int16_t **local_altitude**
Local Altitude

uint8_t **floor_number**
Floor Number

uint16_t **uncertainty**
Uncertainty

struct esp_ble_mesh_gen_user_properties_status_cb_t
Parameter of Generic User Properties Status.

Public Members

struct net_buf_simple ***property_ids**
Buffer contains a sequence of N User Property IDs

struct esp_ble_mesh_gen_user_property_status_cb_t
Parameters of Generic User Property Status.

Public Members

bool **op_en**
Indicate if optional parameters are included

uint16_t **property_id**
Property ID identifying a Generic User Property

uint8_t **user_access**
Enumeration indicating user access (optional)

struct net_buf_simple ***property_value**
Raw value for the User Property (C.1)

struct esp_ble_mesh_gen_admin_properties_status_cb_t
Parameter of Generic Admin Properties Status.

Public Members

struct net_buf_simple ***property_ids**
Buffer contains a sequence of N Admin Property IDs

struct esp_ble_mesh_gen_admin_property_status_cb_t
Parameters of Generic Admin Property Status.

Public Members

bool **op_en**
Indicate if optional parameters are included

uint16_t **property_id**
Property ID identifying a Generic Admin Property

uint8_t **user_access**
Enumeration indicating user access (optional)

struct net_buf_simple ***property_value**
Raw value for the Admin Property (C.1)

struct esp_ble_mesh_gen_manufacturer_properties_status_cb_t
Parameter of Generic Manufacturer Properties Status.

Public Members

struct net_buf_simple ***property_ids**
Buffer contains a sequence of N Manufacturer Property IDs

struct esp_ble_mesh_gen_manufacturer_property_status_cb_t
Parameters of Generic Manufacturer Property Status.

Public Members

bool **op_en**
Indicate if optional parameters are included

uint16_t **property_id**
Property ID identifying a Generic Manufacturer Property

uint8_t **user_access**
Enumeration indicating user access (optional)

struct net_buf_simple ***property_value**
Raw value for the Manufacturer Property (C.1)

struct esp_ble_mesh_gen_client_properties_status_cb_t
Parameter of Generic Client Properties Status.

Public Members

struct net_buf_simple ***property_ids**
Buffer contains a sequence of N Client Property IDs

struct esp_ble_mesh_generic_client_cb_param_t
Generic Client Model callback parameters

Public Members

int **error_code**
Appropriate error code

esp_ble_mesh_client_common_param_t ***params**
The client common parameters.

esp_ble_mesh_gen_client_status_cb_t **status_cb**
The generic status message callback values

struct esp_ble_mesh_gen_onoff_state_t
Parameters of Generic OnOff state

Public Members

uint8_t **onoff**
The present value of the Generic OnOff state

uint8_t **target_onoff**
The target value of the Generic OnOff state

struct esp_ble_mesh_gen_onoff_srv_t
User data of Generic OnOff Server Model

Public Members

esp_ble_mesh_model_t ***model**
Pointer to the Generic OnOff Server Model. Initialized internally.

esp_ble_mesh_server_rsp_ctrl_t **rsp_ctrl**
Response control of the server model received messages

esp_ble_mesh_gen_onoff_state_t **state**
Parameters of the Generic OnOff state

esp_ble_mesh_last_msg_info_t **last**
Parameters of the last received set message

esp_ble_mesh_state_transition_t **transition**
Parameters of state transition

struct esp_ble_mesh_gen_level_state_t
Parameters of Generic Level state

Public Members

int16_t **level**
The present value of the Generic Level state

int16_t **target_level**
The target value of the Generic Level state

int16_t **last_level**
When a new transaction starts, level should be set to last_last, and use "level + incoming delta" to calculate the target level. In another word, "last_level" is used to record "level" of the last transaction, and "last_delta" is used to record the previously received delta_level value.The last value of the Generic Level state

int32_t **last_delta**
The last delta change of the Generic Level state

bool **move_start**
Indicate if the transition of the Generic Level state has been started

bool **positive**
Indicate if the transition is positive or negative

struct esp_ble_mesh_gen_level_srv_t
User data of Generic Level Server Model

Public Members

esp_ble_mesh_model_t ***model**
Pointer to the Generic Level Server Model. Initialized internally.

esp_ble_mesh_server_rsp_ctrl_t **rsp_ctrl**
Response control of the server model received messages

esp_ble_mesh_gen_level_state_t **state**
Parameters of the Generic Level state

esp_ble_mesh_last_msg_info_t **last**
Parameters of the last received set message

esp_ble_mesh_state_transition_t **transition**
Parameters of state transition

int32_t **tt_delta_level**
Delta change value of level state transition

struct esp_ble_mesh_gen_def_trans_time_state_t
Parameter of Generic Default Transition Time state

Public Members

uint8_t **trans_time**
The value of the Generic Default Transition Time state

struct esp_ble_mesh_gen_def_trans_time_srv_t
User data of Generic Default Transition Time Server Model

Public Members

esp_ble_mesh_model_t ***model**
Pointer to the Generic Default Transition Time Server Model. Initialized internally.

esp_ble_mesh_server_rsp_ctrl_t **rsp_ctrl**
Response control of the server model received messages

esp_ble_mesh_gen_def_trans_time_state_t **state**
Parameters of the Generic Default Transition Time state

struct esp_ble_mesh_gen_onpowerup_state_t
Parameter of Generic OnPowerUp state

Public Members

uint8_t **onpowerup**
The value of the Generic OnPowerUp state

struct esp_ble_mesh_gen_power_onoff_srv_t
User data of Generic Power OnOff Server Model

Public Members

esp_ble_mesh_model_t ***model**
Pointer to the Generic Power OnOff Server Model. Initialized internally.

esp_ble_mesh_server_rsp_ctrl_t **rsp_ctrl**
Response control of the server model received messages

esp_ble_mesh_gen_onpowerup_state_t ***state**
Parameters of the Generic OnPowerUp state

struct esp_ble_mesh_gen_power_onoff_setup_srv_t
User data of Generic Power OnOff Setup Server Model

Public Members

esp_ble_mesh_model_t ***model**
Pointer to the Generic Power OnOff Setup Server Model. Initialized internally.

esp_ble_mesh_server_rsp_ctrl_t **rsp_ctrl**
Response control of the server model received messages

esp_ble_mesh_gen_onpowerup_state_t ***state**
Parameters of the Generic OnPowerUp state

struct esp_ble_mesh_gen_power_level_state_t
Parameters of Generic Power Level state

Public Members

uint16_t **power_actual**
The present value of the Generic Power Actual state

uint16_t **target_power_actual**
The target value of the Generic Power Actual state

uint16_t **power_last**
The value of the Generic Power Last state

uint16_t **power_default**
The value of the Generic Power Default state

uint8_t **status_code**
The status code of setting Generic Power Range state

uint16_t **power_range_min**
The minimum value of the Generic Power Range state

uint16_t **power_range_max**
The maximum value of the Generic Power Range state

struct esp_ble_mesh_gen_power_level_srv_t
User data of Generic Power Level Server Model

Public Members

esp_ble_mesh_model_t ***model**
Pointer to the Generic Power Level Server Model. Initialized internally.

esp_ble_mesh_server_rsp_ctrl_t **rsp_ctrl**
Response control of the server model received messages

esp_ble_mesh_gen_power_level_state_t ***state**
Parameters of the Generic Power Level state

esp_ble_mesh_last_msg_info_t **last**
Parameters of the last received set message

esp_ble_mesh_state_transition_t **transition**
Parameters of state transition

int32_t **tt_delta_level**
Delta change value of level state transition

struct esp_ble_mesh_gen_power_level_setup_srv_t
User data of Generic Power Level Setup Server Model

Public Members

esp_ble_mesh_model_t ***model**
Pointer to the Generic Power Level Setup Server Model. Initialized internally.

esp_ble_mesh_server_rsp_ctrl_t **rsp_ctrl**
Response control of the server model received messages

esp_ble_mesh_gen_power_level_state_t ***state**
Parameters of the Generic Power Level state

struct esp_ble_mesh_gen_battery_state_t
Parameters of Generic Battery state

Public Members

uint32_t **battery_level** : 8
The value of the Generic Battery Level state

uint32_t **time_to_discharge** : 24
The value of the Generic Battery Time to Discharge state

uint32_t **time_to_charge** : 24
The value of the Generic Battery Time to Charge state

uint32_t **battery_flags** : 8
The value of the Generic Battery Flags state

struct esp_ble_mesh_gen_battery_srv_t
User data of Generic Battery Server Model

Public Members

esp_ble_mesh_model_t ***model**
Pointer to the Generic Battery Server Model. Initialized internally.

esp_ble_mesh_server_rsp_ctrl_t **rsp_ctrl**
Response control of the server model received messages

esp_ble_mesh_gen_battery_state_t **state**
Parameters of the Generic Battery state

struct esp_ble_mesh_gen_location_state_t
Parameters of Generic Location state

Public Members

int32_t **global_latitude**
The value of the Global Latitude field

int32_t **global_longitude**
The value of the Global Longitude field

int16_t **global_altitude**
The value of the Global Altitude field

int16_t **local_north**
The value of the Local North field

int16_t **local_east**
The value of the Local East field

int16_t **local_altitude**
The value of the Local Altitude field

uint8_t **floor_number**
The value of the Floor Number field

uint16_t **uncertainty**
The value of the Uncertainty field

struct esp_ble_mesh_gen_location_srv_t
User data of Generic Location Server Model

Public Members

esp_ble_mesh_model_t ***model**
Pointer to the Generic Location Server Model. Initialized internally.

esp_ble_mesh_server_rsp_ctrl_t **rsp_ctrl**
Response control of the server model received messages

esp_ble_mesh_gen_location_state_t ***state**
Parameters of the Generic Location state

struct esp_ble_mesh_gen_location_setup_srv_t
User data of Generic Location Setup Server Model

Public Members

esp_ble_mesh_model_t ***model**
Pointer to the Generic Location Setup Server Model. Initialized internally.

esp_ble_mesh_server_rsp_ctrl_t **rsp_ctrl**
Response control of the server model received messages

esp_ble_mesh_gen_location_state_t ***state**
Parameters of the Generic Location state

struct esp_ble_mesh_generic_property_t
Parameters of Generic Property states

Public Members

uint16_t **id**
The value of User/Admin/Manufacturer Property ID

uint8_t **user_access**
The value of User Access field

uint8_t **admin_access**
The value of Admin Access field

uint8_t **manu_access**
The value of Manufacturer Access field

struct net_buf_simple ***val**
The value of User/Admin/Manufacturer Property

struct esp_ble_mesh_gen_user_prop_srv_t
User data of Generic User Property Server Model

Public Members

esp_ble_mesh_model_t ***model**
Pointer to the Generic User Property Server Model. Initialized internally.

esp_ble_mesh_server_rsp_ctrl_t **rsp_ctrl**
Response control of the server model received messages

uint8_t **property_count**
Generic User Property count

esp_ble_mesh_generic_property_t ***properties**
Parameters of the Generic User Property state

struct esp_ble_mesh_gen_admin_prop_srv_t
User data of Generic Admin Property Server Model

Public Members

esp_ble_mesh_model_t ***model**
Pointer to the Generic Admin Property Server Model. Initialized internally.

esp_ble_mesh_server_rsp_ctrl_t **rsp_ctrl**
Response control of the server model received messages

uint8_t **property_count**
Generic Admin Property count

esp_ble_mesh_generic_property_t ***properties**
Parameters of the Generic Admin Property state

struct esp_ble_mesh_gen_manu_prop_srv_t
User data of Generic Manufacturer Property Server Model

Public Members

esp_ble_mesh_model_t ***model**
Pointer to the Generic Manufacturer Property Server Model. Initialized internally.

esp_ble_mesh_server_rsp_ctrl_t **rsp_ctrl**
Response control of the server model received messages

uint8_t **property_count**
Generic Manufacturer Property count

esp_ble_mesh_generic_property_t ***properties**
Parameters of the Generic Manufacturer Property state

struct esp_ble_mesh_gen_client_prop_srv_t
User data of Generic Client Property Server Model

Public Members

esp_ble_mesh_model_t ***model**
Pointer to the Generic Client Property Server Model. Initialized internally.

esp_ble_mesh_server_rsp_ctrl_t **rsp_ctrl**
Response control of the server model received messages

uint8_t **id_count**
Generic Client Property ID count

uint16_t ***property_ids**
Parameters of the Generic Client Property state

struct esp_ble_mesh_state_change_gen_onoff_set_t
Parameter of Generic OnOff Set state change event

Public Members

uint8_t **onoff**
The value of Generic OnOff state

struct esp_ble_mesh_state_change_gen_level_set_t
Parameter of Generic Level Set state change event

Public Members

int16_t **level**
The value of Generic Level state

struct esp_ble_mesh_state_change_gen_delta_set_t
Parameter of Generic Delta Set state change event

Public Members

int16_t **level**
The value of Generic Level state

struct esp_ble_mesh_state_change_gen_move_set_t
Parameter of Generic Move Set state change event

Public Members

int16_t **level**
The value of Generic Level state

struct esp_ble_mesh_state_change_gen_def_trans_time_set_t
Parameter of Generic Default Transition Time Set state change event

Public Members

uint8_t **trans_time**
The value of Generic Default Transition Time state

struct esp_ble_mesh_state_change_gen_onpowerup_set_t
Parameter of Generic OnPowerUp Set state change event

Public Members

uint8_t **onpowerup**
The value of Generic OnPowerUp state

struct esp_ble_mesh_state_change_gen_power_level_set_t
Parameter of Generic Power Level Set state change event

Public Members

uint16_t **power**
The value of Generic Power Actual state

struct esp_ble_mesh_state_change_gen_power_default_set_t
Parameter of Generic Power Default Set state change event

Public Members

uint16_t **power**
The value of Generic Power Default state

struct esp_ble_mesh_state_change_gen_power_range_set_t
Parameters of Generic Power Range Set state change event

Public Members

uint16_t **range_min**
The minimum value of Generic Power Range state

uint16_t **range_max**
The maximum value of Generic Power Range state

struct esp_ble_mesh_state_change_gen_loc_global_set_t
Parameters of Generic Location Global Set state change event

Public Members

int32_t **latitude**
The Global Latitude value of Generic Location state

int32_t **longitude**
The Global Longitude value of Generic Location state

int16_t **altitude**
The Global Altitude value of Generic Location state

struct esp_ble_mesh_state_change_gen_loc_local_set_t
Parameters of Generic Location Local Set state change event

Public Members

int16_t **north**
The Local North value of Generic Location state

int16_t **east**
The Local East value of Generic Location state

int16_t **altitude**
The Local Altitude value of Generic Location state

uint8_t **floor_number**
The Floor Number value of Generic Location state

uint16_t **uncertainty**
The Uncertainty value of Generic Location state

struct esp_ble_mesh_state_change_gen_user_property_set_t
Parameters of Generic User Property Set state change event

Public Members

uint16_t **id**
The property id of Generic User Property state

struct net_buf_simple ***value**
The property value of Generic User Property state

struct esp_ble_mesh_state_change_gen_admin_property_set_t
Parameters of Generic Admin Property Set state change event

Public Members

uint16_t **id**
The property id of Generic Admin Property state

uint8_t **access**
The property access of Generic Admin Property state

struct net_buf_simple ***value**
The property value of Generic Admin Property state

struct esp_ble_mesh_state_change_gen_manu_property_set_t
Parameters of Generic Manufacturer Property Set state change event

Public Members

uint16_t **id**
The property id of Generic Manufacturer Property state

uint8_t **access**
The property value of Generic Manufacturer Property state

struct esp_ble_mesh_server_recv_gen_user_property_get_t
Context of the received Generic User Property Get message

Public Members

uint16_t **property_id**
Property ID identifying a Generic User Property

struct esp_ble_mesh_server_recv_gen_admin_property_get_t
Context of the received Generic Admin Property Get message

Public Members

uint16_t **property_id**
Property ID identifying a Generic Admin Property

struct esp_ble_mesh_server_recv_gen_manufacturer_property_get_t
Context of the received Generic Manufacturer Property message

Public Members

uint16_t **property_id**
Property ID identifying a Generic Manufacturer Property

struct esp_ble_mesh_server_recv_gen_client_properties_get_t
Context of the received Generic Client Properties Get message

Public Members

uint16_t **property_id**
A starting Client Property ID present within an element

struct esp_ble_mesh_server_recv_gen_onoff_set_t
Context of the received Generic OnOff Set message

Public Members

bool **op_en**
Indicate if optional parameters are included

uint8_t **onoff**
Target value of Generic OnOff state

uint8_t **tid**
Transaction ID

uint8_t **trans_time**
Time to complete state transition (optional)

uint8_t **delay**
Indicate message execution delay (C.1)

struct esp_ble_mesh_server_recv_gen_level_set_t
Context of the received Generic Level Set message

Public Members

bool **op_en**
Indicate if optional parameters are included

int16_t **level**
Target value of Generic Level state

uint8_t **tid**
Transaction ID

uint8_t **trans_time**
Time to complete state transition (optional)

uint8_t **delay**
Indicate message execution delay (C.1)

struct esp_ble_mesh_server_recv_gen_delta_set_t
Context of the received Generic Delta Set message

Public Members

bool **op_en**
Indicate if optional parameters are included

int32_t **delta_level**
Delta change of Generic Level state

uint8_t **tid**
Transaction ID

uint8_t **trans_time**
Time to complete state transition (optional)

uint8_t **delay**
Indicate message execution delay (C.1)

struct esp_ble_mesh_server_recv_gen_move_set_t
Context of the received Generic Move Set message

Public Members

bool **op_en**
Indicate if optional parameters are included

int16_t **delta_level**
Delta Level step to calculate Move speed for Generic Level state

uint8_t **tid**
Transaction ID

uint8_t **trans_time**
Time to complete state transition (optional)

uint8_t **delay**
Indicate message execution delay (C.1)

struct esp_ble_mesh_server_recv_gen_def_trans_time_set_t
Context of the received Generic Default Transition Time Set message

Public Members

uint8_t **trans_time**
The value of the Generic Default Transition Time state

struct esp_ble_mesh_server_recv_gen_onpowerup_set_t
Context of the received Generic OnPowerUp Set message

Public Members

uint8_t **onpowerup**
The value of the Generic OnPowerUp state

struct esp_ble_mesh_server_recv_gen_power_level_set_t
Context of the received Generic Power Level Set message

Public Members

bool **op_en**
Indicate if optional parameters are included

uint16_t **power**
Target value of Generic Power Actual state

uint8_t **tid**
Transaction ID

uint8_t **trans_time**
Time to complete state transition (optional)

uint8_t **delay**
Indicate message execution delay (C.1)

struct esp_ble_mesh_server_recv_gen_power_default_set_t
Context of the received Generic Power Default Set message

Public Members

uint16_t **power**
The value of the Generic Power Default state

struct esp_ble_mesh_server_recv_gen_power_range_set_t
Context of the received Generic Power Range Set message

Public Members

uint16_t **range_min**
Value of Range Min field of Generic Power Range state

uint16_t **range_max**
Value of Range Max field of Generic Power Range state

struct esp_ble_mesh_server_recv_gen_loc_global_set_t
Context of the received Generic Location Global Set message

Public Members

int32_t **global_latitude**
Global Coordinates (Latitude)

int32_t **global_longitude**
Global Coordinates (Longitude)

int16_t **global_altitude**
Global Altitude

struct esp_ble_mesh_server_recv_gen_loc_local_set_t
Context of the received Generic Location Local Set message

Public Members

int16_t **local_north**
Local Coordinates (North)

int16_t **local_east**
Local Coordinates (East)

int16_t **local_altitude**
Local Altitude

uint8_t **floor_number**
Floor Number

uint16_t **uncertainty**
Uncertainty

struct esp_ble_mesh_server_recv_gen_user_property_set_t
Context of the received Generic User Property Set message

Public Members

uint16_t **property_id**
Property ID identifying a Generic User Property

struct net_buf_simple ***property_value**
Raw value for the User Property

struct esp_ble_mesh_server_recv_gen_admin_property_set_t
Context of the received Generic Admin Property Set message

Public Members

uint16_t **property_id**
Property ID identifying a Generic Admin Property

uint8_t **user_access**
Enumeration indicating user access

struct net_buf_simple ***property_value**
Raw value for the Admin Property

struct esp_ble_mesh_server_recv_gen_manufacturer_property_set_t
Context of the received Generic Manufacturer Property Set message

Public Members

uint16_t **property_id**
Property ID identifying a Generic Manufacturer Property

uint8_t **user_access**
Enumeration indicating user access

struct esp_ble_mesh_generic_server_cb_param_t
Generic Server Model callback parameters

Public Members

esp_ble_mesh_model_t ***model**
Pointer to Generic Server Models

esp_ble_mesh_msg_ctx_t **ctx**
Context of the received messages

esp_ble_mesh_generic_server_cb_value_t **value**
Value of the received Generic Messages

Macros

ESP_BLE_MESH_MODEL_GEN_ONOFF_CLI(cli_pub, cli_data)
Define a new Generic OnOff Client Model.

Note This API needs to be called for each element on which the application needs to have a Generic OnOff Client Model.
Return New Generic OnOff Client Model instance.
Parameters
- `cli_pub`: Pointer to the unique struct *esp_ble_mesh_model_pub_t*.
- `cli_data`: Pointer to the unique struct *esp_ble_mesh_client_t*.

ESP_BLE_MESH_MODEL_GEN_LEVEL_CLI(cli_pub, cli_data)
Define a new Generic Level Client Model.

Note This API needs to be called for each element on which the application needs to have a Generic Level Client Model.
Return New Generic Level Client Model instance.
Parameters
- `cli_pub`: Pointer to the unique struct *esp_ble_mesh_model_pub_t*.
- `cli_data`: Pointer to the unique struct *esp_ble_mesh_client_t*.

ESP_BLE_MESH_MODEL_GEN_DEF_TRANS_TIME_CLI(cli_pub, cli_data)
Define a new Generic Default Transition Time Client Model.

Note This API needs to be called for each element on which the application needs to have a Generic Default Transition Time Client Model.
Return New Generic Default Transition Time Client Model instance.
Parameters
- `cli_pub`: Pointer to the unique struct *esp_ble_mesh_model_pub_t*.
- `cli_data`: Pointer to the unique struct *esp_ble_mesh_client_t*.

ESP_BLE_MESH_MODEL_GEN_POWER_ONOFF_CLI(cli_pub, cli_data)
Define a new Generic Power OnOff Client Model.

Note This API needs to be called for each element on which the application needs to have a Generic Power OnOff Client Model.
Return New Generic Power OnOff Client Model instance.
Parameters
- `cli_pub`: Pointer to the unique struct *esp_ble_mesh_model_pub_t*.
- `cli_data`: Pointer to the unique struct *esp_ble_mesh_client_t*.

ESP_BLE_MESH_MODEL_GEN_POWER_LEVEL_CLI(cli_pub, cli_data)
Define a new Generic Power Level Client Model.

Note This API needs to be called for each element on which the application needs to have a Generic Power Level Client Model.
Return New Generic Power Level Client Model instance.
Parameters
- `cli_pub`: Pointer to the unique struct *esp_ble_mesh_model_pub_t*.
- `cli_data`: Pointer to the unique struct *esp_ble_mesh_client_t*.

ESP_BLE_MESH_MODEL_GEN_BATTERY_CLI(cli_pub, cli_data)
Define a new Generic Battery Client Model.

Note This API needs to be called for each element on which the application needs to have a Generic Battery Client Model.
Return New Generic Battery Client Model instance.
Parameters
- `cli_pub`: Pointer to the unique struct *esp_ble_mesh_model_pub_t*.
- `cli_data`: Pointer to the unique struct *esp_ble_mesh_client_t*.

ESP_BLE_MESH_MODEL_GEN_LOCATION_CLI(cli_pub, cli_data)
Define a new Generic Location Client Model.

Note This API needs to be called for each element on which the application needs to have a Generic Location Client Model.
Return New Generic Location Client Model instance.
Parameters
- `cli_pub`: Pointer to the unique struct *esp_ble_mesh_model_pub_t*.
- `cli_data`: Pointer to the unique struct *esp_ble_mesh_client_t*.

ESP_BLE_MESH_MODEL_GEN_PROPERTY_CLI(cli_pub, cli_data)
Define a new Generic Property Client Model.

Note This API needs to be called for each element on which the application needs to have a Generic Property Client Model.
Return New Generic Location Client Model instance.
Parameters
- `cli_pub`: Pointer to the unique struct *esp_ble_mesh_model_pub_t*.
- `cli_data`: Pointer to the unique struct *esp_ble_mesh_client_t*.

ESP_BLE_MESH_MODEL_GEN_ONOFF_SRV(srv_pub, srv_data)
Generic Server Models related context.

Define a new Generic OnOff Server Model.

Note 1. The Generic OnOff Server Model is a root model.
1. This model shall support model publication and model subscription.
Return New Generic OnOff Server Model instance.
Parameters
- `srv_pub`: Pointer to the unique struct *esp_ble_mesh_model_pub_t*.
- `srv_data`: Pointer to the unique struct *esp_ble_mesh_gen_onoff_srv_t*.

ESP_BLE_MESH_MODEL_GEN_LEVEL_SRV(srv_pub, srv_data)
Define a new Generic Level Server Model.

Note 1. The Generic Level Server Model is a root model.
1. This model shall support model publication and model subscription.
Return New Generic Level Server Model instance.
Parameters
- `srv_pub`: Pointer to the unique struct *esp_ble_mesh_model_pub_t*.
- `srv_data`: Pointer to the unique struct *esp_ble_mesh_gen_level_srv_t*.

ESP_BLE_MESH_MODEL_GEN_DEF_TRANS_TIME_SRV(srv_pub, srv_data)
Define a new Generic Default Transition Time Server Model.

Note 1. The Generic Default Transition Time Server Model is a root model.
1. This model shall support model publication and model subscription.

Return New Generic Default Transition Time Server Model instance.

Parameters
- `srv_pub`: Pointer to the unique struct *esp_ble_mesh_model_pub_t*.
- `srv_data`: Pointer to the unique struct *esp_ble_mesh_gen_def_trans_time_srv_t*.

ESP_BLE_MESH_MODEL_GEN_POWER_ONOFF_SRV(srv_pub, srv_data)
Define a new Generic Power OnOff Server Model.

Note 1. The Generic Power OnOff Server model extends the Generic OnOff Server model. When this model is present on an element, the corresponding Generic Power OnOff Setup Server model shall also be present.
1. This model may be used to represent a variety of devices that do not fit any of the model descriptions that have been defined but support the generic properties of On/Off.
2. This model shall support model publication and model subscription.

Return New Generic Power OnOff Server Model instance.

Parameters
- `srv_pub`: Pointer to the unique struct *esp_ble_mesh_model_pub_t*.
- `srv_data`: Pointer to the unique struct *esp_ble_mesh_gen_power_onoff_srv_t*.

ESP_BLE_MESH_MODEL_GEN_POWER_ONOFF_SETUP_SRV(srv_pub, srv_data)
Define a new Generic Power OnOff Setup Server Model.

Note 1. The Generic Power OnOff Setup Server model extends the Generic Power OnOff Server model and the Generic Default Transition Time Server model.
1. This model shall support model subscription.

Return New Generic Power OnOff Setup Server Model instance.

Parameters
- `srv_pub`: Pointer to the unique struct *esp_ble_mesh_model_pub_t*.
- `srv_data`: Pointer to the unique struct *esp_ble_mesh_gen_power_onoff_setup_srv_t*.

ESP_BLE_MESH_MODEL_GEN_POWER_LEVEL_SRV(srv_pub, srv_data)
Define a new Generic Power Level Server Model.

Note 1. The Generic Power Level Server model extends the Generic Power OnOff Server model and the Generic Level Server model. When this model is present on an Element, the corresponding Generic Power Level Setup Server model shall also be present.
1. This model shall support model publication and model subscription.

Return New Generic Power Level Server Model instance.

Parameters
- `srv_pub`: Pointer to the unique struct *esp_ble_mesh_model_pub_t*.
- `srv_data`: Pointer to the unique struct *esp_ble_mesh_gen_power_level_srv_t*.

ESP_BLE_MESH_MODEL_GEN_POWER_LEVEL_SETUP_SRV(srv_pub, srv_data)
Define a new Generic Power Level Setup Server Model.

Note 1. The Generic Power Level Setup Server model extends the Generic Power Level Server model and the Generic Power OnOff Setup Server model.
1. This model shall support model subscription.

Return New Generic Power Level Setup Server Model instance.

Parameters
- `srv_pub`: Pointer to the unique struct *esp_ble_mesh_model_pub_t*.
- `srv_data`: Pointer to the unique struct *esp_ble_mesh_gen_power_level_setup_srv_t*.

ESP_BLE_MESH_MODEL_GEN_BATTERY_SRV(srv_pub, srv_data)
Define a new Generic Battery Server Model.

Note 1. The Generic Battery Server Model is a root model.
1. This model shall support model publication and model subscription.
2. The model may be used to represent an element that is powered by a battery.

Return New Generic Battery Server Model instance.

Parameters

- `srv_pub`: Pointer to the unique struct *esp_ble_mesh_model_pub_t*.
- `srv_data`: Pointer to the unique struct *esp_ble_mesh_gen_battery_srv_t*.

ESP_BLE_MESH_MODEL_GEN_LOCATION_SRV(srv_pub, srv_data)

Define a new Generic Location Server Model.

Note 1. The Generic Location Server model is a root model. When this model is present on an Element, the corresponding Generic Location Setup Server model shall also be present.

1. This model shall support model publication and model subscription.
2. The model may be used to represent an element that knows its location (global or local).

Return New Generic Location Server Model instance.

Parameters

- `srv_pub`: Pointer to the unique struct *esp_ble_mesh_model_pub_t*.
- `srv_data`: Pointer to the unique struct *esp_ble_mesh_gen_location_srv_t*.

ESP_BLE_MESH_MODEL_GEN_LOCATION_SETUP_SRV(srv_pub, srv_data)

Define a new Generic Location Setup Server Model.

Note 1. The Generic Location Setup Server model extends the Generic Location Server model.

1. This model shall support model subscription.

Return New Generic Location Setup Server Model instance.

Parameters

- `srv_pub`: Pointer to the unique struct *esp_ble_mesh_model_pub_t*.
- `srv_data`: Pointer to the unique struct *esp_ble_mesh_gen_location_setup_srv_t*.

ESP_BLE_MESH_MODEL_GEN_USER_PROP_SRV(srv_pub, srv_data)

Define a new Generic User Property Server Model.

Note 1. The Generic User Property Server model is a root model.

1. This model shall support model publication and model subscription.

Return New Generic User Property Server Model instance.

Parameters

- `srv_pub`: Pointer to the unique struct *esp_ble_mesh_model_pub_t*.
- `srv_data`: Pointer to the unique struct *esp_ble_mesh_gen_user_prop_srv_t*.

ESP_BLE_MESH_MODEL_GEN_ADMIN_PROP_SRV(srv_pub, srv_data)

Define a new Generic Admin Property Server Model.

Note 1. The Generic Admin Property Server model extends the Generic User Property Server model.

1. This model shall support model publication and model subscription.

Return New Generic Admin Property Server Model instance.

Parameters

- `srv_pub`: Pointer to the unique struct *esp_ble_mesh_model_pub_t*.
- `srv_data`: Pointer to the unique struct *esp_ble_mesh_gen_admin_prop_srv_t*.

ESP_BLE_MESH_MODEL_GEN_MANUFACTURER_PROP_SRV(srv_pub, srv_data)

Define a new Generic Manufacturer Property Server Model.

Note 1. The Generic Manufacturer Property Server model extends the Generic User Property Server model.

1. This model shall support model publication and model subscription.

Return New Generic Manufacturer Property Server Model instance.

Parameters

- `srv_pub`: Pointer to the unique struct *esp_ble_mesh_model_pub_t*.
- `srv_data`: Pointer to the unique struct *esp_ble_mesh_gen_manu_prop_srv_t*.

ESP_BLE_MESH_MODEL_GEN_CLIENT_PROP_SRV(srv_pub, srv_data)

Define a new Generic User Property Server Model.

Note 1. The Generic Client Property Server model is a root model.

1. This model shall support model publication and model subscription.

Return New Generic Client Property Server Model instance.

Parameters

- `srv_pub`: Pointer to the unique struct *esp_ble_mesh_model_pub_t*.
- `srv_data`: Pointer to the unique struct *esp_ble_mesh_gen_client_prop_srv_t*.

Type Definitions

typedef void (***esp_ble_mesh_generic_client_cb_t**)(*esp_ble_mesh_generic_client_cb_event_t* event, *esp_ble_mesh_generic_client_cb_param_t* *param)

Bluetooth Mesh Generic Client Model function.

Generic Client Model callback function type

Parameters

- `event`: Event type
- `param`: Pointer to callback parameter

typedef void (***esp_ble_mesh_generic_server_cb_t**)(*esp_ble_mesh_generic_server_cb_event_t* event, *esp_ble_mesh_generic_server_cb_param_t* *param)

Bluetooth Mesh Generic Server Model function.

Generic Server Model callback function type

Parameters

- `event`: Event type
- `param`: Pointer to callback parameter

Enumerations

enum esp_ble_mesh_generic_client_cb_event_t

This enum value is the event of Generic Client Model

Values:

ESP_BLE_MESH_GENERIC_CLIENT_GET_STATE_EVT

ESP_BLE_MESH_GENERIC_CLIENT_SET_STATE_EVT

ESP_BLE_MESH_GENERIC_CLIENT_PUBLISH_EVT

ESP_BLE_MESH_GENERIC_CLIENT_TIMEOUT_EVT

ESP_BLE_MESH_GENERIC_CLIENT_EVT_MAX

enum esp_ble_mesh_gen_user_prop_access_t

This enum value is the access value of Generic User Property

Values:

ESP_BLE_MESH_GEN_USER_ACCESS_PROHIBIT

ESP_BLE_MESH_GEN_USER_ACCESS_READ

ESP_BLE_MESH_GEN_USER_ACCESS_WRITE

ESP_BLE_MESH_GEN_USER_ACCESS_READ_WRITE

enum esp_ble_mesh_gen_admin_prop_access_t

This enum value is the access value of Generic Admin Property

Values:

ESP_BLE_MESH_GEN_ADMIN_NOT_USER_PROP

ESP_BLE_MESH_GEN_ADMIN_ACCESS_READ

ESP_BLE_MESH_GEN_ADMIN_ACCESS_WRITE

ESP_BLE_MESH_GEN_ADMIN_ACCESS_READ_WRITE

enum esp_ble_mesh_gen_manu_prop_access_t

This enum value is the access value of Generic Manufacturer Property

Values:

ESP_BLE_MESH_GEN_MANU_NOT_USER_PROP

ESP_BLE_MESH_GEN_MANU_ACCESS_READ

enum esp_ble_mesh_generic_server_cb_event_t

This enum value is the event of Generic Server Model

Values:

ESP_BLE_MESH_GENERIC_SERVER_STATE_CHANGE_EVT

1. When get_auto_rsp is set to ESP_BLE_MESH_SERVER_AUTO_RSP, no event will be callback to the application layer when Generic Get messages are received.
2. When set_auto_rsp is set to ESP_BLE_MESH_SERVER_AUTO_RSP, this event will be callback to the application layer when Generic Set/Set Unack messages are received.

ESP_BLE_MESH_GENERIC_SERVER_RECV_GET_MSG_EVT

When get_auto_rsp is set to ESP_BLE_MESH_SERVER_RSP_BY_APP, this event will be callback to the application layer when Generic Get messages are received.

ESP_BLE_MESH_GENERIC_SERVER_RECV_SET_MSG_EVT

When set_auto_rsp is set to ESP_BLE_MESH_SERVER_RSP_BY_APP, this event will be callback to the application layer when Generic Set/Set Unack messages are received.

ESP_BLE_MESH_GENERIC_SERVER_EVT_MAX

Sensor Client/Server Models

Header File

- bt/esp_ble_mesh/api/models/include/esp_ble_mesh_sensor_model_api.h

Functions

esp_err_t **esp_ble_mesh_register_sensor_client_callback**(*esp_ble_mesh_sensor_client_cb_t callback*)

Register BLE Mesh Sensor Client Model callback.

Return ESP_OK on success or error code otherwise.

Parameters

- `[in] callback`: Pointer to the callback function.

esp_err_t **esp_ble_mesh_sensor_client_get_state**(*esp_ble_mesh_client_common_param_t* **params*, *esp_ble_mesh_sensor_client_get_state_t* **get_state*)

Get the value of Sensor Server Model states using the Sensor Client Model get messages.

Note If you want to know the opcodes and corresponding meanings accepted by this API, please refer to esp_ble_mesh_sensor_message_opcode_t in esp_ble_mesh_defs.h

Return ESP_OK on success or error code otherwise.

Parameters

- `[in] params`: Pointer to BLE Mesh common client parameters.
- `[in] get_state`: Pointer to sensor get message value. Shall not be set to NULL.

esp_err_t **esp_ble_mesh_sensor_client_set_state**(*esp_ble_mesh_client_common_param_t* **params*, *esp_ble_mesh_sensor_client_set_state_t* **set_state*)

Set the value of Sensor Server Model states using the Sensor Client Model set messages.

Note If you want to know the opcodes and corresponding meanings accepted by this API, please refer to esp_ble_mesh_sensor_message_opcode_t in esp_ble_mesh_defs.h

Return ESP_OK on success or error code otherwise.

Parameters

- `[in] params`: Pointer to BLE Mesh common client parameters.
- `[in] set_state`: Pointer to sensor set message value. Shall not be set to NULL.

esp_err_t **esp_ble_mesh_register_sensor_server_callback**(*esp_ble_mesh_sensor_server_cb_t callback*)

Register BLE Mesh Sensor Server Model callback.

Return ESP_OK on success or error code otherwise.

Parameters

- `[in] callback`: Pointer to the callback function.

Unions

union esp_ble_mesh_sensor_client_get_state_t

#include <esp_ble_mesh_sensor_model_api.h> Sensor Client Model get message union.

Public Members

esp_ble_mesh_sensor_descriptor_get_t **descriptor_get**

For ESP_BLE_MESH_MODEL_OP_SENSOR_DESCRIPTOR_GET

esp_ble_mesh_sensor_cadence_get_t **cadence_get**

For ESP_BLE_MESH_MODEL_OP_SENSOR_CADENCE_GET

esp_ble_mesh_sensor_settings_get_t **settings_get**

For ESP_BLE_MESH_MODEL_OP_SENSOR_SETTINGS_GET

esp_ble_mesh_sensor_setting_get_t **setting_get**

For ESP_BLE_MESH_MODEL_OP_SENSOR_SETTING_GET

esp_ble_mesh_sensor_get_t **sensor_get**

For ESP_BLE_MESH_MODEL_OP_SENSOR_GET

esp_ble_mesh_sensor_column_get_t **column_get**

For ESP_BLE_MESH_MODEL_OP_SENSOR_COLUMN_GET

esp_ble_mesh_sensor_series_get_t **series_get**

For ESP_BLE_MESH_MODEL_OP_SENSOR_SERIES_GET

union esp_ble_mesh_sensor_client_set_state_t

#include <esp_ble_mesh_sensor_model_api.h> Sensor Client Model set message union.

Public Members

esp_ble_mesh_sensor_cadence_set_t **cadence_set**

For ESP_BLE_MESH_MODEL_OP_SENSOR_CADENCE_SET & ESP_BLE_MESH_MODEL_OP_SENSOR_CADENCE_SET_UNACK

esp_ble_mesh_sensor_setting_set_t **setting_set**

For ESP_BLE_MESH_MODEL_OP_SENSOR_SETTING_SET & ESP_BLE_MESH_MODEL_OP_SENSOR_SETTING_SET_UNACK

union esp_ble_mesh_sensor_client_status_cb_t

#include <esp_ble_mesh_sensor_model_api.h> Sensor Client Model received message union.

Public Members

esp_ble_mesh_sensor_descriptor_status_cb_t **descriptor_status**

For ESP_BLE_MESH_MODEL_OP_SENSOR_DESCRIPTOR_STATUS

esp_ble_mesh_sensor_cadence_status_cb_t **cadence_status**

For ESP_BLE_MESH_MODEL_OP_SENSOR_CADENCE_STATUS

esp_ble_mesh_sensor_settings_status_cb_t **settings_status**

For ESP_BLE_MESH_MODEL_OP_SENSOR_SETTINGS_STATUS

esp_ble_mesh_sensor_setting_status_cb_t **setting_status**
For ESP_BLE_MESH_MODEL_OP_SENSOR_SETTING_STATUS

esp_ble_mesh_sensor_status_cb_t **sensor_status**
For ESP_BLE_MESH_MODEL_OP_SENSOR_STATUS

esp_ble_mesh_sensor_column_status_cb_t **column_status**
For ESP_BLE_MESH_MODEL_OP_SENSOR_COLUMN_STATUS

esp_ble_mesh_sensor_series_status_cb_t **series_status**
For ESP_BLE_MESH_MODEL_OP_SENSOR_SERIES_STATUS

union esp_ble_mesh_sensor_server_state_change_t
#include <esp_ble_mesh_sensor_model_api.h> Sensor Server Model state change value union.

Public Members

esp_ble_mesh_state_change_sensor_cadence_set_t **sensor_cadence_set**
The recv_op in ctx can be used to decide which state is changed.Sensor Cadence Set

esp_ble_mesh_state_change_sensor_setting_set_t **sensor_setting_set**
Sensor Setting Set

union esp_ble_mesh_sensor_server_recv_get_msg_t
#include <esp_ble_mesh_sensor_model_api.h> Sensor Server Model received get message union.

Public Members

esp_ble_mesh_server_recv_sensor_descriptor_get_t **sensor_descriptor**
Sensor Descriptor Get

esp_ble_mesh_server_recv_sensor_cadence_get_t **sensor_cadence**
Sensor Cadence Get

esp_ble_mesh_server_recv_sensor_settings_get_t **sensor_settings**
Sensor Settings Get

esp_ble_mesh_server_recv_sensor_setting_get_t **sensor_setting**
Sensor Setting Get

esp_ble_mesh_server_recv_sensor_get_t **sensor_data**
Sensor Get

esp_ble_mesh_server_recv_sensor_column_get_t **sensor_column**
Sensor Column Get

esp_ble_mesh_server_recv_sensor_series_get_t **sensor_series**
Sensor Series Get

union esp_ble_mesh_sensor_server_recv_set_msg_t
#include <esp_ble_mesh_sensor_model_api.h> Sensor Server Model received set message union.

Public Members

esp_ble_mesh_server_recv_sensor_cadence_set_t **sensor_cadence**
Sensor Cadence Set

esp_ble_mesh_server_recv_sensor_setting_set_t **sensor_setting**
Sensor Setting Set

union esp_ble_mesh_sensor_server_cb_value_t
#include <esp_ble_mesh_sensor_model_api.h> Sensor Server Model callback value union.

Public Members

esp_ble_mesh_sensor_server_state_change_t **state_change**
ESP_BLE_MESH_SENSOR_SERVER_STATE_CHANGE_EVT

esp_ble_mesh_sensor_server_recv_get_msg_t **get**
ESP_BLE_MESH_SENSOR_SERVER_RECV_GET_MSG_EVT

esp_ble_mesh_sensor_server_recv_set_msg_t **set**
ESP_BLE_MESH_SENSOR_SERVER_RECV_SET_MSG_EVT

Structures

struct esp_ble_mesh_sensor_descriptor_get_t
Bluetooth Mesh Sensor Client Model Get and Set parameters structure.

Parameters of Sensor Descriptor Get

Public Members

bool **op_en**
Indicate if optional parameters are included

uint16_t **property_id**
Property ID of a sensor (optional)

struct esp_ble_mesh_sensor_cadence_get_t
Parameter of Sensor Cadence Get

Public Members

uint16_t **property_id**
Property ID of a sensor

struct esp_ble_mesh_sensor_cadence_set_t
Parameters of Sensor Cadence Set

Public Members

uint16_t **property_id**
Property ID for the sensor

uint8_t **fast_cadence_period_divisor** : 7
Divisor for the publish period

uint8_t **status_trigger_type** : 1
The unit and format of the Status Trigger Delta fields

struct net_buf_simple ***status_trigger_delta_down**
Delta down value that triggers a status message

struct net_buf_simple ***status_trigger_delta_up**
Delta up value that triggers a status message

uint8_t **status_min_interval**
Minimum interval between two consecutive Status messages

struct net_buf_simple ***fast_cadence_low**
Low value for the fast cadence range

struct net_buf_simple ***fast_cadence_high**
Fast value for the fast cadence range

struct esp_ble_mesh_sensor_settings_get_t
Parameter of Sensor Settings Get

Public Members

uint16_t **sensor_property_id**
Property ID of a sensor

struct esp_ble_mesh_sensor_setting_get_t
Parameters of Sensor Setting Get

Public Members

uint16_t **sensor_property_id**
Property ID of a sensor

uint16_t **sensor_setting_property_id**
Setting ID identifying a setting within a sensor

struct esp_ble_mesh_sensor_setting_set_t
Parameters of Sensor Setting Set

Public Members

uint16_t **sensor_property_id**
Property ID identifying a sensor

uint16_t **sensor_setting_property_id**
Setting ID identifying a setting within a sensor

struct net_buf_simple ***sensor_setting_raw**
Raw value for the setting

struct esp_ble_mesh_sensor_get_t
Parameters of Sensor Get

Public Members

bool **op_en**
Indicate if optional parameters are included

uint16_t **property_id**
Property ID for the sensor (optional)

struct esp_ble_mesh_sensor_column_get_t
Parameters of Sensor Column Get

Public Members

uint16_t **property_id**
Property identifying a sensor

struct net_buf_simple ***raw_value_x**
Raw value identifying a column

struct esp_ble_mesh_sensor_series_get_t
Parameters of Sensor Series Get

Public Members

bool **op_en**
Indicate if optional parameters are included

uint16_t **property_id**
Property identifying a sensor

struct net_buf_simple ***raw_value_x1**
Raw value identifying a starting column (optional)

struct net_buf_simple ***raw_value_x2**
Raw value identifying an ending column (C.1)

struct esp_ble_mesh_sensor_descriptor_status_cb_t
Bluetooth Mesh Sensor Client Model Get and Set callback parameters structure.

Parameter of Sensor Descriptor Status

Public Members

struct net_buf_simple ***descriptor**
Sequence of 8-octet sensor descriptors (optional)

struct esp_ble_mesh_sensor_cadence_status_cb_t
Parameters of Sensor Cadence Status

Public Members

uint16_t **property_id**
Property for the sensor

struct net_buf_simple ***sensor_cadence_value**
Value of sensor cadence state

struct esp_ble_mesh_sensor_settings_status_cb_t
Parameters of Sensor Settings Status

Public Members

uint16_t **sensor_property_id**
Property ID identifying a sensor

struct net_buf_simple ***sensor_setting_property_ids**
A sequence of N sensor setting property IDs (optional)

struct esp_ble_mesh_sensor_setting_status_cb_t
Parameters of Sensor Setting Status

Public Members

bool **op_en**
Indicate id optional parameters are included

uint16_t **sensor_property_id**
Property ID identifying a sensor

uint16_t **sensor_setting_property_id**
Setting ID identifying a setting within a sensor

uint8_t **sensor_setting_access**
Read/Write access rights for the setting (optional)

struct net_buf_simple ***sensor_setting_raw**
Raw value for the setting

struct esp_ble_mesh_sensor_status_cb_t
Parameter of Sensor Status

Public Members

struct net_buf_simple ***marshalled_sensor_data**
Value of sensor data state (optional)

struct esp_ble_mesh_sensor_column_status_cb_t
Parameters of Sensor Column Status

Public Members

uint16_t **property_id**
Property identifying a sensor and the Y axis

struct net_buf_simple ***sensor_column_value**
Left values of sensor column status

struct esp_ble_mesh_sensor_series_status_cb_t
Parameters of Sensor Series Status

Public Members

uint16_t **property_id**
Property identifying a sensor and the Y axis

struct net_buf_simple ***sensor_series_value**
Left values of sensor series status

struct esp_ble_mesh_sensor_client_cb_param_t
Sensor Client Model callback parameters

Public Members

int **error_code**
0: success, otherwise failure. For the error code values please refer to errno.h file. A negative sign is added to the standard error codes in errno.h.

esp_ble_mesh_client_common_param_t ***params**
The client common parameters.

esp_ble_mesh_sensor_client_status_cb_t **status_cb**
The sensor status message callback values

struct esp_ble_mesh_sensor_descriptor_t
Parameters of Sensor Descriptor state

Public Members

uint32_t **positive_tolerance** : 12
The value of Sensor Positive Tolerance field

uint32_t **negative_tolerance** : 12
The value of Sensor Negative Tolerance field

uint32_t **sampling_function** : 8
The value of Sensor Sampling Function field

uint8_t **measure_period**
The value of Sensor Measurement Period field

uint8_t **update_interval**
The value of Sensor Update Interval field

struct esp_ble_mesh_sensor_setting_t
Parameters of Sensor Setting state

Public Members

uint16_t **property_id**
The value of Sensor Setting Property ID field

uint8_t **access**
The value of Sensor Setting Access field

struct net_buf_simple ***raw**
The value of Sensor Setting Raw field

struct esp_ble_mesh_sensor_cadence_t
Parameters of Sensor Cadence state

Public Members

uint8_t **period_divisor** : 7
The value of Fast Cadence Period Divisor field

uint8_t **trigger_type** : 1
The value of Status Trigger Type field

struct net_buf_simple ***trigger_delta_down**
Note: The parameter "size" in trigger_delta_down, trigger_delta_up, fast_cadence_low & fast_cadence_high indicates the exact length of these four parameters, and they are associated with the Sensor Property ID. Users need to initialize the "size" precisely.The value of Status Trigger Delta Down field

struct net_buf_simple ***trigger_delta_up**
The value of Status Trigger Delta Up field

uint8_t **min_interval**
The value of Status Min Interval field

struct net_buf_simple ***fast_cadence_low**
The value of Fast Cadence Low field

struct net_buf_simple ***fast_cadence_high**
The value of Fast Cadence High field

struct esp_ble_mesh_sensor_data_t
Parameters of Sensor Data state

Public Members

uint8_t **format** : 1
Format A: The Length field is a 1-based uint4 value (valid range 0x0–0xF, representing range of 1 –16).

Format B: The Length field is a 1-based uint7 value (valid range 0x0–0x7F, representing range of 1 – 127). The value 0x7F represents a length of zero.The value of the Sensor Data format

uint8_t **length** : 7
The value of the Sensor Data length

struct net_buf_simple ***raw_value**
The value of Sensor Data raw value

struct esp_ble_mesh_sensor_series_column_t
Parameters of Sensor Series Column state

Public Members

struct net_buf_simple ***raw_value_x**
The value of Sensor Raw Value X field

struct net_buf_simple ***column_width**
The value of Sensor Column Width field

struct net_buf_simple ***raw_value_y**
The value of Sensor Raw Value Y field

struct esp_ble_mesh_sensor_state_t
Parameters of Sensor states

Public Members

uint16_t **sensor_property_id**
The value of Sensor Property ID field

esp_ble_mesh_sensor_descriptor_t **descriptor**
Parameters of the Sensor Descriptor state

const uint8_t **setting_count**
Multiple Sensor Setting states may be present for each sensor. The Sensor Setting Property ID values shall be unique for each Sensor Property ID that identifies a sensor within an element.

esp_ble_mesh_sensor_setting_t ***settings**
Parameters of the Sensor Setting state

esp_ble_mesh_sensor_cadence_t ***cadence**
The Sensor Cadence state may be not supported by sensors based on device properties referencing "non-scalar characteristics" such as "histograms" or "composite characteristics" .Parameters of the Sensor Cadence state

esp_ble_mesh_sensor_data_t **sensor_data**
Parameters of the Sensor Data state

esp_ble_mesh_sensor_series_column_t **series_column**
Parameters of the Sensor Series Column state

struct esp_ble_mesh_sensor_srv_t
User data of Sensor Server Model

Public Members

esp_ble_mesh_model_t ***model**
Pointer to the Sensor Server Model. Initialized internally.

esp_ble_mesh_server_rsp_ctrl_t **rsp_ctrl**
Response control of the server model received messages

const uint8_t **state_count**
Sensor state count

esp_ble_mesh_sensor_state_t ***states**
Parameters of the Sensor states

struct esp_ble_mesh_sensor_setup_srv_t
User data of Sensor Setup Server Model

Public Members

esp_ble_mesh_model_t ***model**
Pointer to the Sensor Setup Server Model. Initialized internally.

esp_ble_mesh_server_rsp_ctrl_t **rsp_ctrl**
Response control of the server model received messages

const uint8_t **state_count**
Sensor state count

esp_ble_mesh_sensor_state_t ***states**
Parameters of the Sensor states

struct esp_ble_mesh_state_change_sensor_cadence_set_t
Parameters of Sensor Cadence Set state change event

Public Members

uint16_t **property_id**
The value of Sensor Property ID state

uint8_t **period_divisor** : 7
The value of Fast Cadence Period Divisor state

uint8_t **trigger_type** : 1
The value of Status Trigger Type state

struct net_buf_simple ***trigger_delta_down**
The value of Status Trigger Delta Down state

struct net_buf_simple ***trigger_delta_up**
The value of Status Trigger Delta Up state

uint8_t **min_interval**
The value of Status Min Interval state

struct net_buf_simple ***fast_cadence_low**
The value of Fast Cadence Low state

struct net_buf_simple ***fast_cadence_high**
The value of Fast Cadence High state

struct esp_ble_mesh_state_change_sensor_setting_set_t
Parameters of Sensor Setting Set state change event

Public Members

uint16_t **property_id**
The value of Sensor Property ID state

uint16_t **setting_property_id**
The value of Sensor Setting Property ID state

struct net_buf_simple ***setting_value**
The value of Sensor Property Value state

struct esp_ble_mesh_server_recv_sensor_descriptor_get_t
Context of the received Sensor Descriptor Get message

Public Members

bool **op_en**
Indicate if optional parameters are included

uint16_t **property_id**
Property ID of a sensor (optional)

struct esp_ble_mesh_server_recv_sensor_cadence_get_t
Context of the received Sensor Cadence Get message

Public Members

uint16_t **property_id**
Property ID of a sensor

struct esp_ble_mesh_server_recv_sensor_settings_get_t
Context of the received Sensor Settings Get message

Public Members

uint16_t **property_id**
Property ID of a sensor

struct esp_ble_mesh_server_recv_sensor_setting_get_t
Context of the received Sensor Setting Get message

Public Members

uint16_t **property_id**
Property ID of a sensor

uint16_t **setting_property_id**
Setting ID identifying a setting within a sensor

struct esp_ble_mesh_server_recv_sensor_get_t
Context of the received Sensor Get message

Public Members

bool **op_en**
Indicate if optional parameters are included

uint16_t **property_id**
Property ID for the sensor (optional)

struct esp_ble_mesh_server_recv_sensor_column_get_t
Context of the received Sensor Column Get message

Public Members

uint16_t **property_id**
Property identifying a sensor

struct net_buf_simple ***raw_value_x**
Raw value identifying a column

struct esp_ble_mesh_server_recv_sensor_series_get_t
Context of the received Sensor Series Get message

Public Members

bool **op_en**
Indicate if optional parameters are included

uint16_t **property_id**
Property identifying a sensor

struct net_buf_simple ***raw_value**
Raw value containing X1 and X2 (optional)

struct esp_ble_mesh_server_recv_sensor_cadence_set_t
Context of the received Sensor Cadence Set message

Public Members

uint16_t **property_id**
Property ID for the sensor

struct net_buf_simple ***cadence**
Value of Sensor Cadence state

struct esp_ble_mesh_server_recv_sensor_setting_set_t
Context of the received Sensor Setting Set message

Public Members

uint16_t **property_id**
Property ID identifying a sensor

uint16_t **setting_property_id**
Setting ID identifying a setting within a sensor

struct net_buf_simple ***setting_raw**
Raw value for the setting

struct esp_ble_mesh_sensor_server_cb_param_t
Sensor Server Model callback parameters

Public Members

esp_ble_mesh_model_t ***model**
Pointer to Sensor Server Models

esp_ble_mesh_msg_ctx_t **ctx**
Context of the received messages

esp_ble_mesh_sensor_server_cb_value_t **value**
Value of the received Sensor Messages

Macros

ESP_BLE_MESH_MODEL_SENSOR_CLI(cli_pub, cli_data)

Define a new Sensor Client Model.

Note This API needs to be called for each element on which the application needs to have a Sensor Client Model.

Return New Sensor Client Model instance.

Parameters

- `cli_pub`: Pointer to the unique struct *esp_ble_mesh_model_pub_t*.
- `cli_data`: Pointer to the unique struct *esp_ble_mesh_client_t*.

ESP_BLE_MESH_MODEL_SENSOR_SRV(srv_pub, srv_data)

Sensor Server Models related context.

Define a new Sensor Server Model.

Note 1. The Sensor Server model is a root model. When this model is present on an element, the corresponding Sensor Setup Server model shall also be present.
1. This model shall support model publication and model subscription.

Return New Sensor Server Model instance.

Parameters

- `srv_pub`: Pointer to the unique struct *esp_ble_mesh_model_pub_t*.
- `srv_data`: Pointer to the unique struct *esp_ble_mesh_sensor_srv_t*.

ESP_BLE_MESH_MODEL_SENSOR_SETUP_SRV(srv_pub, srv_data)

Define a new Sensor Setup Server Model.

Note 1. The Sensor Setup Server model extends the Sensor Server model.
1. This model shall support model publication and model subscription.

Return New Sensor Setup Server Model instance.

Parameters

- `srv_pub`: Pointer to the unique struct *esp_ble_mesh_model_pub_t*.
- `srv_data`: Pointer to the unique struct *esp_ble_mesh_sensor_setup_srv_t*.

ESP_BLE_MESH_INVALID_SENSOR_PROPERTY_ID

Invalid Sensor Property ID

ESP_BLE_MESH_SENSOR_PROPERTY_ID_LEN

Length of Sensor Property ID

ESP_BLE_MESH_SENSOR_DESCRIPTOR_LEN

Length of Sensor Descriptor state

ESP_BLE_MESH_SENSOR_UNSPECIFIED_POS_TOLERANCE

Unspecified Sensor Positive Tolerance

ESP_BLE_MESH_SENSOR_UNSPECIFIED_NEG_TOLERANCE

Unspecified Sensor Negative Tolerance

ESP_BLE_MESH_SENSOR_NOT_APPL_MEASURE_PERIOD

Not applicable Sensor Measurement Period

ESP_BLE_MESH_SENSOR_NOT_APPL_UPDATE_INTERVAL

Not applicable Sensor Update Interval

ESP_BLE_MESH_INVALID_SENSOR_SETTING_PROPERTY_ID

Invalid Sensor Setting Property ID

ESP_BLE_MESH_SENSOR_SETTING_PROPERTY_ID_LEN

Length of Sensor Setting Property ID

ESP_BLE_MESH_SENSOR_SETTING_ACCESS_LEN

Length of Sensor Setting Access

ESP_BLE_MESH_SENSOR_SETTING_ACCESS_READ

Sensor Setting Access - Read

ESP_BLE_MESH_SENSOR_SETTING_ACCESS_READ_WRITE
Sensor Setting Access - Read & Write

ESP_BLE_MESH_SENSOR_DIVISOR_TRIGGER_TYPE_LEN
Length of Sensor Divisor Trigger Type

ESP_BLE_MESH_SENSOR_STATUS_MIN_INTERVAL_LEN
Length of Sensor Status Min Interval

ESP_BLE_MESH_SENSOR_PERIOD_DIVISOR_MAX_VALUE
Maximum value of Sensor Period Divisor

ESP_BLE_MESH_SENSOR_STATUS_MIN_INTERVAL_MAX
Maximum value of Sensor Status Min Interval

ESP_BLE_MESH_SENSOR_STATUS_TRIGGER_TYPE_CHAR
Sensor Status Trigger Type - Format Type of the characteristic that the Sensor Property ID state references

ESP_BLE_MESH_SENSOR_STATUS_TRIGGER_TYPE_UINT16
Sensor Status Trigger Type - Format Type "uint16"

ESP_BLE_MESH_SENSOR_DATA_FORMAT_A
Sensor Data Format A

ESP_BLE_MESH_SENSOR_DATA_FORMAT_B
Sensor Data Format B

ESP_BLE_MESH_SENSOR_DATA_FORMAT_A_MPID_LEN
MPID length of Sensor Data Format A

ESP_BLE_MESH_SENSOR_DATA_FORMAT_B_MPID_LEN
MPID length of Sensor Data Format B

ESP_BLE_MESH_SENSOR_DATA_ZERO_LEN
Zero length of Sensor Data.

Note: The Length field is a 1-based uint7 value (valid range 0x0–0x7F, representing range of 1–127). The value 0x7F represents a length of zero.

ESP_BLE_MESH_GET_SENSOR_DATA_FORMAT(_data)
Get format of the sensor data.

Note Multiple sensor data may be concatenated. Make sure the _data pointer is updated before getting the format of the corresponding sensor data.

Return Format of the sensor data.

Parameters

- `_data`: Pointer to the start of the sensor data.

ESP_BLE_MESH_GET_SENSOR_DATA_LENGTH(_data, _fmt)
Get length of the sensor data.

Note Multiple sensor data may be concatenated. Make sure the _data pointer is updated before getting the length of the corresponding sensor data.

Return Length (zero-based) of the sensor data.

Parameters

- `_data`: Pointer to the start of the sensor data.
- `_fmt`: Format of the sensor data.

ESP_BLE_MESH_GET_SENSOR_DATA_PROPERTY_ID(_data, _fmt)
Get Sensor Property ID of the sensor data.

Note Multiple sensor data may be concatenated. Make sure the _data pointer is updated before getting Sensor Property ID of the corresponding sensor data.

Return Sensor Property ID of the sensor data.

Parameters

- `_data`: Pointer to the start of the sensor data.
- `_fmt`: Format of the sensor data.

ESP_BLE_MESH_SENSOR_DATA_FORMAT_A_MPID(_len, _id)

Generate a MPID value for sensor data with Format A.

Note 1. The Format field is 0b0 and indicates that Format A is used.

1. The Length field is a 1-based uint4 value (valid range 0x0–0xF, representing range of 1–16).
2. The Property ID is an 11-bit bit field representing 11 LSb of a Property ID.
3. This format may be used for Property Values that are not longer than 16 octets and for Property IDs less than 0x0800.

Return 2-octet MPID value for sensor data with Format A.

Parameters

- `_len`: Length of Sensor Raw value.
- `_id`: Sensor Property ID.

ESP_BLE_MESH_SENSOR_DATA_FORMAT_B_MPID(_len, _id)

Generate a MPID value for sensor data with Format B.

Note 1. The Format field is 0b1 and indicates Format B is used.

1. The Length field is a 1-based uint7 value (valid range 0x0–0x7F, representing range of 1–127). The value 0x7F represents a length of zero.
2. The Property ID is a 16-bit bit field representing a Property ID.
3. This format may be used for Property Values not longer than 128 octets and for any Property IDs. Property values longer than 128 octets are not supported by the Sensor Status message.
4. Exclude the generated 1-octet value, the 2-octet Sensor Property ID

Return 3-octet MPID value for sensor data with Format B.

Parameters

- `_len`: Length of Sensor Raw value.
- `_id`: Sensor Property ID.

Type Definitions

typedef void (***esp_ble_mesh_sensor_client_cb_t**)(*esp_ble_mesh_sensor_client_cb_event_t* event, *esp_ble_mesh_sensor_client_cb_param_t* *param)

Bluetooth Mesh Sensor Client Model function.

Sensor Client Model callback function type

Parameters

- `event`: Event type
- `param`: Pointer to callback parameter

typedef void (***esp_ble_mesh_sensor_server_cb_t**)(*esp_ble_mesh_sensor_server_cb_event_t* event, *esp_ble_mesh_sensor_server_cb_param_t* *param)

Bluetooth Mesh Sensor Server Model function.

Sensor Server Model callback function type

Parameters

- `event`: Event type
- `param`: Pointer to callback parameter

Enumerations

enum esp_ble_mesh_sensor_client_cb_event_t

This enum value is the event of Sensor Client Model

Values:

ESP_BLE_MESH_SENSOR_CLIENT_GET_STATE_EVT

ESP_BLE_MESH_SENSOR_CLIENT_SET_STATE_EVT

ESP_BLE_MESH_SENSOR_CLIENT_PUBLISH_EVT

ESP_BLE_MESH_SENSOR_CLIENT_TIMEOUT_EVT

ESP_BLE_MESH_SENSOR_CLIENT_EVT_MAX

enum esp_ble_mesh_sensor_sample_func

This enum value is value of Sensor Sampling Function

Values:

ESP_BLE_MESH_SAMPLE_FUNC_UNSPECIFIED

ESP_BLE_MESH_SAMPLE_FUNC_INSTANTANEOUS

ESP_BLE_MESH_SAMPLE_FUNC_ARITHMETIC_MEAN

ESP_BLE_MESH_SAMPLE_FUNC_RMS

ESP_BLE_MESH_SAMPLE_FUNC_MAXIMUM

ESP_BLE_MESH_SAMPLE_FUNC_MINIMUM

ESP_BLE_MESH_SAMPLE_FUNC_ACCUMULATED

ESP_BLE_MESH_SAMPLE_FUNC_COUNT

enum esp_ble_mesh_sensor_server_cb_event_t

This enum value is the event of Sensor Server Model

Values:

ESP_BLE_MESH_SENSOR_SERVER_STATE_CHANGE_EVT

1. When get_auto_rsp is set to ESP_BLE_MESH_SERVER_AUTO_RSP, no event will be callback to the application layer when Sensor Get messages are received.
2. When set_auto_rsp is set to ESP_BLE_MESH_SERVER_AUTO_RSP, this event will be callback to the application layer when Sensor Set/Set Unack messages are received.

ESP_BLE_MESH_SENSOR_SERVER_RECV_GET_MSG_EVT

When get_auto_rsp is set to ESP_BLE_MESH_SERVER_RSP_BY_APP, this event will be callback to the application layer when Sensor Get messages are received.

ESP_BLE_MESH_SENSOR_SERVER_RECV_SET_MSG_EVT

When set_auto_rsp is set to ESP_BLE_MESH_SERVER_RSP_BY_APP, this event will be callback to the application layer when Sensor Set/Set Unack messages are received.

ESP_BLE_MESH_SENSOR_SERVER_EVT_MAX

Time and Scenes Client/Server Models

Header File

- bt/esp_ble_mesh/api/models/include/esp_ble_mesh_time_scene_model_api.h

Functions

esp_err_t **esp_ble_mesh_register_time_scene_client_callback**(*esp_ble_mesh_time_scene_client_cb_t callback*)

Register BLE Mesh Time Scene Client Model callback.

Return ESP_OK on success or error code otherwise.

Parameters

- `[in] callback`: Pointer to the callback function.

esp_err_t **esp_ble_mesh_time_scene_client_get_state**(*esp_ble_mesh_client_common_param_t* **params*, *esp_ble_mesh_time_scene_client_get_state_t* **get_state*)

Get the value of Time Scene Server Model states using the Time Scene Client Model get messages.

Note If you want to know the opcodes and corresponding meanings accepted by this API, please refer to esp_ble_mesh_time_scene_message_opcode_t in esp_ble_mesh_defs.h

Return ESP_OK on success or error code otherwise.

Parameters

- `[in] params`: Pointer to BLE Mesh common client parameters.
- `[in] get_state`: Pointer to time scene get message value. Shall not be set to NULL.

esp_err_t **esp_ble_mesh_time_scene_client_set_state**(*esp_ble_mesh_client_common_param_t *params*, *esp_ble_mesh_time_scene_client_set_state_t *set_state*)

Set the value of Time Scene Server Model states using the Time Scene Client Model set messages.

Note If you want to know the opcodes and corresponding meanings accepted by this API, please refer to esp_ble_mesh_time_scene_message_opcode_t in esp_ble_mesh_defs.h

Return ESP_OK on success or error code otherwise.

Parameters

- `[in] params`: Pointer to BLE Mesh common client parameters.
- `[in] set_state`: Pointer to time scene set message value. Shall not be set to NULL.

esp_err_t **esp_ble_mesh_register_time_scene_server_callback**(*esp_ble_mesh_time_scene_server_cb_t callback*)

Register BLE Mesh Time and Scenes Server Model callback.

Return ESP_OK on success or error code otherwise.

Parameters

- `[in] callback`: Pointer to the callback function.

Unions

union esp_ble_mesh_time_scene_client_get_state_t

#include <esp_ble_mesh_time_scene_model_api.h> Time Scene Client Model get message union.

Public Members

esp_ble_mesh_scheduler_act_get_t **scheduler_act_get**

For ESP_BLE_MESH_MODEL_OP_SCHEDULER_ACT_GET

union esp_ble_mesh_time_scene_client_set_state_t

#include <esp_ble_mesh_time_scene_model_api.h> Time Scene Client Model set message union.

Public Members

esp_ble_mesh_time_set_t **time_set**

For ESP_BLE_MESH_MODEL_OP_TIME_SET

esp_ble_mesh_time_zone_set_t **time_zone_set**

For ESP_BLE_MESH_MODEL_OP_TIME_ZONE_SET

esp_ble_mesh_tai_utc_delta_set_t **tai_utc_delta_set**

For ESP_BLE_MESH_MODEL_OP_TAI_UTC_DELTA_SET

esp_ble_mesh_time_role_set_t **time_role_set**

For ESP_BLE_MESH_MODEL_OP_TIME_ROLE_SET

esp_ble_mesh_scene_store_t **scene_store**

For ESP_BLE_MESH_MODEL_OP_SCENE_STORE & ESP_BLE_MESH_MODEL_OP_SCENE_STORE_UNACK

esp_ble_mesh_scene_recall_t **scene_recall**

For ESP_BLE_MESH_MODEL_OP_SCENE_RECALL & ESP_BLE_MESH_MODEL_OP_SCENE_RECALL_UNA

esp_ble_mesh_scene_delete_t **scene_delete**

For ESP_BLE_MESH_MODEL_OP_SCENE_DELETE & ESP_BLE_MESH_MODEL_OP_SCENE_DELETE_UNAC

esp_ble_mesh_scheduler_act_set_t **scheduler_act_set**
For ESP_BLE_MESH_MODEL_OP_SCHEDULER_ACT_SET & ESP_BLE_MESH_MODEL_OP_SCHEDULER_ACT_SET_UNACK

union esp_ble_mesh_time_scene_client_status_cb_t
#include <esp_ble_mesh_time_scene_model_api.h> Time Scene Client Model received message union.

Public Members

esp_ble_mesh_time_status_cb_t **time_status**
For ESP_BLE_MESH_MODEL_OP_TIME_STATUS

esp_ble_mesh_time_zone_status_cb_t **time_zone_status**
For ESP_BLE_MESH_MODEL_OP_TIME_ZONE_STATUS

esp_ble_mesh_tai_utc_delta_status_cb_t **tai_utc_delta_status**
For ESP_BLE_MESH_MODEL_OP_TAI_UTC_DELTA_STATUS

esp_ble_mesh_time_role_status_cb_t **time_role_status**
For ESP_BLE_MESH_MODEL_OP_TIME_ROLE_STATUS

esp_ble_mesh_scene_status_cb_t **scene_status**
For ESP_BLE_MESH_MODEL_OP_SCENE_STATUS

esp_ble_mesh_scene_register_status_cb_t **scene_register_status**
For ESP_BLE_MESH_MODEL_OP_SCENE_REGISTER_STATUS

esp_ble_mesh_scheduler_status_cb_t **scheduler_status**
For ESP_BLE_MESH_MODEL_OP_SCHEDULER_STATUS

esp_ble_mesh_scheduler_act_status_cb_t **scheduler_act_status**
For ESP_BLE_MESH_MODEL_OP_SCHEDULER_ACT_STATUS

union esp_ble_mesh_time_scene_server_state_change_t
#include <esp_ble_mesh_time_scene_model_api.h> Time Scene Server Model state change value union.

Public Members

esp_ble_mesh_state_change_time_set_t **time_set**
The recv_op in ctx can be used to decide which state is changed.Time Set

esp_ble_mesh_state_change_time_status_t **time_status**
Time Status

esp_ble_mesh_state_change_time_zone_set_t **time_zone_set**
Time Zone Set

esp_ble_mesh_state_change_tai_utc_delta_set_t **tai_utc_delta_set**
TAI UTC Delta Set

esp_ble_mesh_state_change_time_role_set_t **time_role_set**
Time Role Set

esp_ble_mesh_state_change_scene_store_t **scene_store**
Scene Store

esp_ble_mesh_state_change_scene_recall_t **scene_recall**
Scene Recall

esp_ble_mesh_state_change_scene_delete_t **scene_delete**
Scene Delete

esp_ble_mesh_state_change_scheduler_act_set_t **scheduler_act_set**
Scheduler Action Set

union esp_ble_mesh_time_scene_server_recv_get_msg_t

#include <esp_ble_mesh_time_scene_model_api.h> Time Scene Server Model received get message union.

Public Members

esp_ble_mesh_server_recv_scheduler_act_get_t **scheduler_act**

Scheduler Action Get

union esp_ble_mesh_time_scene_server_recv_set_msg_t

#include <esp_ble_mesh_time_scene_model_api.h> Time Scene Server Model received set message union.

Public Members

esp_ble_mesh_server_recv_time_set_t **time**

Time Set

esp_ble_mesh_server_recv_time_zone_set_t **time_zone**

Time Zone Set

esp_ble_mesh_server_recv_tai_utc_delta_set_t **tai_utc_delta**

TAI-UTC Delta Set

esp_ble_mesh_server_recv_time_role_set_t **time_role**

Time Role Set

esp_ble_mesh_server_recv_scene_store_t **scene_store**

Scene Store/Scene Store Unack

esp_ble_mesh_server_recv_scene_recall_t **scene_recall**

Scene Recall/Scene Recall Unack

esp_ble_mesh_server_recv_scene_delete_t **scene_delete**

Scene Delete/Scene Delete Unack

esp_ble_mesh_server_recv_scheduler_act_set_t **scheduler_act**

Scheduler Action Set/Scheduler Action Set Unack

union esp_ble_mesh_time_scene_server_recv_status_msg_t

#include <esp_ble_mesh_time_scene_model_api.h> Time Scene Server Model received status message union.

Public Members

esp_ble_mesh_server_recv_time_status_t **time_status**

Time Status

union esp_ble_mesh_time_scene_server_cb_value_t

#include <esp_ble_mesh_time_scene_model_api.h> Time Scene Server Model callback value union.

Public Members

esp_ble_mesh_time_scene_server_state_change_t **state_change**

ESP_BLE_MESH_TIME_SCENE_SERVER_STATE_CHANGE_EVT

esp_ble_mesh_time_scene_server_recv_get_msg_t **get**

ESP_BLE_MESH_TIME_SCENE_SERVER_RECV_GET_MSG_EVT

esp_ble_mesh_time_scene_server_recv_set_msg_t **set**

ESP_BLE_MESH_TIME_SCENE_SERVER_RECV_SET_MSG_EVT

esp_ble_mesh_time_scene_server_recv_status_msg_t **status**

ESP_BLE_MESH_TIME_SCENE_SERVER_RECV_STATUS_MSG_EVT

Structures

struct esp_ble_mesh_time_set_t

Bluetooth Mesh Time Scene Client Model Get and Set parameters structure.

Parameters of Time Set

Public Members

uint8_t **tai_seconds**[5]
The current TAI time in seconds

uint8_t **sub_second**
The sub-second time in units of 1/256 second

uint8_t **uncertainty**
The estimated uncertainty in 10-millisecond steps

uint16_t **time_authority** : 1
0 = No Time Authority, 1 = Time Authority

uint16_t **tai_utc_delta** : 15
Current difference between TAI and UTC in seconds

uint8_t **time_zone_offset**
The local time zone offset in 15-minute increments

struct esp_ble_mesh_time_zone_set_t

Parameters of Time Zone Set

Public Members

uint8_t **time_zone_offset_new**
Upcoming local time zone offset

uint8_t **tai_zone_change**[5]
TAI Seconds time of the upcoming Time Zone Offset change

struct esp_ble_mesh_tai_utc_delta_set_t

Parameters of TAI-UTC Delta Set

Public Members

uint16_t **tai_utc_delta_new** : 15
Upcoming difference between TAI and UTC in seconds

uint16_t **padding** : 1
Always 0b0. Other values are Prohibited.

uint8_t **tai_delta_change**[5]
TAI Seconds time of the upcoming TAI-UTC Delta change

struct esp_ble_mesh_time_role_set_t

Parameter of Time Role Set

Public Members

uint8_t **time_role**
The Time Role for the element

struct esp_ble_mesh_scene_store_t

Parameter of Scene Store

Public Members

uint16_t **scene_number**
The number of scenes to be stored

struct esp_ble_mesh_scene_recall_t
Parameters of Scene Recall

Public Members

bool **op_en**
Indicate if optional parameters are included

uint16_t **scene_number**
The number of scenes to be recalled

uint8_t **tid**
Transaction ID

uint8_t **trans_time**
Time to complete state transition (optional)

uint8_t **delay**
Indicate message execution delay (C.1)

struct esp_ble_mesh_scene_delete_t
Parameter of Scene Delete

Public Members

uint16_t **scene_number**
The number of scenes to be deleted

struct esp_ble_mesh_scheduler_act_get_t
Parameter of Scheduler Action Get

Public Members

uint8_t **index**
Index of the Schedule Register entry to get

struct esp_ble_mesh_scheduler_act_set_t
Parameters of Scheduler Action Set

Public Members

uint64_t **index** : 4
Index of the Schedule Register entry to set

uint64_t **year** : 7
Scheduled year for the action

uint64_t **month** : 12
Scheduled month for the action

uint64_t **day** : 5
Scheduled day of the month for the action

uint64_t **hour** : 5
Scheduled hour for the action

uint64_t **minute** : 6
Scheduled minute for the action

uint64_t **second** : 6
Scheduled second for the action

uint64_t **day_of_week** : 7
Schedule days of the week for the action

uint64_t **action** : 4
Action to be performed at the scheduled time

uint64_t **trans_time** : 8
Transition time for this action

uint16_t **scene_number**
Transition time for this action

struct esp_ble_mesh_time_status_cb_t
Bluetooth Mesh Time Scene Client Model Get and Set callback parameters structure.

Parameters of Time Status

Public Members

uint8_t **tai_seconds**[5]
The current TAI time in seconds

uint8_t **sub_second**
The sub-second time in units of 1/256 second

uint8_t **uncertainty**
The estimated uncertainty in 10-millisecond steps

uint16_t **time_authority** : 1
0 = No Time Authority, 1 = Time Authority

uint16_t **tai_utc_delta** : 15
Current difference between TAI and UTC in seconds

uint8_t **time_zone_offset**
The local time zone offset in 15-minute increments

struct esp_ble_mesh_time_zone_status_cb_t
Parameters of Time Zone Status

Public Members

uint8_t **time_zone_offset_curr**
Current local time zone offset

uint8_t **time_zone_offset_new**
Upcoming local time zone offset

uint8_t **tai_zone_change**[5]
TAI Seconds time of the upcoming Time Zone Offset change

struct esp_ble_mesh_tai_utc_delta_status_cb_t
Parameters of TAI-UTC Delta Status

Public Members

uint16_t **tai_utc_delta_curr** : 15
Current difference between TAI and UTC in seconds

uint16_t **padding_1** : 1
Always 0b0. Other values are Prohibited.

uint16_t **tai_utc_delta_new** : 15
Upcoming difference between TAI and UTC in seconds

uint16_t **padding_2** : 1
Always 0b0. Other values are Prohibited.

uint8_t **tai_delta_change**[5]
TAI Seconds time of the upcoming TAI-UTC Delta change

struct esp_ble_mesh_time_role_status_cb_t
Parameter of Time Role Status

Public Members

uint8_t **time_role**
The Time Role for the element

struct esp_ble_mesh_scene_status_cb_t
Parameters of Scene Status

Public Members

bool **op_en**
Indicate if optional parameters are included

uint8_t **status_code**
Status code of the last operation

uint16_t **current_scene**
Scene Number of the current scene

uint16_t **target_scene**
Scene Number of the target scene (optional)

uint8_t **remain_time**
Time to complete state transition (C.1)

struct esp_ble_mesh_scene_register_status_cb_t
Parameters of Scene Register Status

Public Members

uint8_t **status_code**
Status code for the previous operation

uint16_t **current_scene**
Scene Number of the current scene

struct net_buf_simple ***scenes**
A list of scenes stored within an element

struct esp_ble_mesh_scheduler_status_cb_t
Parameter of Scheduler Status

Public Members

uint16_t **schedules**
Bit field indicating defined Actions in the Schedule Register

struct esp_ble_mesh_scheduler_act_status_cb_t
Parameters of Scheduler Action Status

Public Members

uint64_t **index** : 4
Enumerates (selects) a Schedule Register entry

uint64_t **year** : 7
Scheduled year for the action

uint64_t **month** : 12
Scheduled month for the action

uint64_t **day** : 5
Scheduled day of the month for the action

uint64_t **hour** : 5
Scheduled hour for the action

uint64_t **minute** : 6
Scheduled minute for the action

uint64_t **second** : 6
Scheduled second for the action

uint64_t **day_of_week** : 7
Schedule days of the week for the action

uint64_t **action** : 4
Action to be performed at the scheduled time

uint64_t **trans_time** : 8
Transition time for this action

uint16_t **scene_number**
Transition time for this action

struct esp_ble_mesh_time_scene_client_cb_param_t
Time Scene Client Model callback parameters

Public Members

int **error_code**
Appropriate error code

esp_ble_mesh_client_common_param_t ***params**
The client common parameters.

esp_ble_mesh_time_scene_client_status_cb_t **status_cb**
The scene status message callback values

struct esp_ble_mesh_time_state_t
Parameters of Time state

Public Members

uint8_t **tai_seconds**[5]
The value of the TAI Seconds state

uint8_t **subsecond**
The value of the Subsecond field

uint8_t **uncertainty**
The value of the Uncertainty field

uint8_t **time_zone_offset_curr**
The value of the Time Zone Offset Current field

uint8_t **time_zone_offset_new**
The value of the Time Zone Offset New state

uint8_t **tai_zone_change**[5]
The value of the TAI of Zone Chaneg field

uint16_t **time_authority** : 1
The value of the Time Authority bit

uint16_t **tai_utc_delta_curr** : 15
The value of the TAI-UTC Delta Current state

uint16_t **tai_utc_delta_new** : 15
The value of the TAI-UTC Delta New state

uint8_t **tai_delta_change**[5]
The value of the TAI of Delta Change field

struct *esp_ble_mesh_time_state_t*::**[anonymous] time**
Parameters of the Time state

uint8_t **time_role**
The value of the Time Role state

struct esp_ble_mesh_time_srv_t
User data of Time Server Model

Public Members

esp_ble_mesh_model_t ***model**
Pointer to the Time Server Model. Initialized internally.

esp_ble_mesh_server_rsp_ctrl_t **rsp_ctrl**
Response control of the server model received messages

esp_ble_mesh_time_state_t ***state**
Parameters of the Time state

struct esp_ble_mesh_time_setup_srv_t
User data of Time Setup Server Model

Public Members

esp_ble_mesh_model_t ***model**
Pointer to the Time Setup Server Model. Initialized internally.

esp_ble_mesh_server_rsp_ctrl_t **rsp_ctrl**
Response control of the server model received messages

esp_ble_mesh_time_state_t ***state**
Parameters of the Time state

struct esp_ble_mesh_scene_register_t

1. Scene Store is an operation of storing values of a present state of an element.
2. The structure and meaning of the stored state is determined by a model. States to be stored are specified by each model.
3. The Scene Store operation shall persistently store all values of all states marked as Stored with Scene for all models present on all elements of a node.

4. If a model is extending another model, the extending model shall determine the Stored with Scene behavior of that model.Parameters of Scene Register state

Public Members

uint16_t **scene_number**
The value of the Scene Number

uint8_t **scene_type**
The value of the Scene Type

struct net_buf_simple ***scene_value**
Scene value may use a union to represent later, the union contains structures of all the model states which can be stored in a scene.The value of the Scene Value

struct esp_ble_mesh_scenes_state_t
Parameters of Scenes state.

Scenes serve as memory banks for storage of states (e.g., a power level or a light level/color). Values of states of an element can be stored as a scene and can be recalled later from the scene memory.

A scene is represented by a Scene Number, which is a 16-bit non-zero, mesh-wide value. (There can be a maximum of 65535 scenes in a mesh network.) The meaning of a scene, as well as the state storage container associated with it, are determined by a model.

The Scenes state change may start numerous parallel model transitions. In that case, each individual model handles the transition internally.

The scene transition is defined as a group of individual model transitions started by a Scene Recall operation. The scene transition is in progress when at least one transition from the group of individual model transitions is in progress.

Public Members

const uint16_t **scene_count**
The Scenes state’ s scene count

esp_ble_mesh_scene_register_t ***scenes**
Parameters of the Scenes state

uint16_t **current_scene**
The Current Scene state is a 16-bit value that contains either the Scene Number of the currently active scene or a value of 0x0000 when no scene is active.

When a Scene Store operation or a Scene Recall operation completes with success, the Current Scene state value shall be to the Scene Number used during that operation.

When the Current Scene Number is deleted from a Scene Register state as a result of Scene Delete operation, the Current Scene state shall be set to 0x0000.

When any of the element’ s state that is marked as “Stored with Scene” has changed not as a result of a Scene Recall operation, the value of the Current Scene state shall be set to 0x0000.

When a scene transition is in progress, the value of the Current Scene state shall be set to 0x0000.The value of the Current Scene state

uint16_t **target_scene**
The Target Scene state is a 16-bit value that contains the target Scene Number when a scene transition is in progress.

When the scene transition is in progress and the target Scene Number is deleted from a Scene Register state as a result of Scene Delete operation, the Target Scene state shall be set to 0x0000.

When the scene transition is in progress and a new Scene Number is stored in the Scene Register as a result of Scene Store operation, the Target Scene state shall be set to the new Scene Number.

When the scene transition is not in progress, the value of the Target Scene state shall be set to 0x0000.The value of the Target Scene state

uint8_t **status_code**
The status code of the last scene operation

bool **in_progress**
Indicate if the scene transition is in progress

struct esp_ble_mesh_scene_srv_t
User data of Scene Server Model

Public Members

esp_ble_mesh_model_t ***model**
Pointer to the Scene Server Model. Initialized internally.

esp_ble_mesh_server_rsp_ctrl_t **rsp_ctrl**
Response control of the server model received messages

esp_ble_mesh_scenes_state_t ***state**
Parameters of the Scenes state

esp_ble_mesh_last_msg_info_t **last**
Parameters of the last received set message

esp_ble_mesh_state_transition_t **transition**
Parameters of state transition

struct esp_ble_mesh_scene_setup_srv_t
User data of Scene Setup Server Model

Public Members

esp_ble_mesh_model_t ***model**
Pointer to the Scene Setup Server Model. Initialized internally.

esp_ble_mesh_server_rsp_ctrl_t **rsp_ctrl**
Response control of the server model received messages

esp_ble_mesh_scenes_state_t ***state**
Parameters of the Scenes state

struct esp_ble_mesh_schedule_register_t
Parameters of Scheduler Register state

Public Members

bool **in_use**
Indicate if the registered schedule is in use

uint64_t **year** : 7
The value of Scheduled year for the action

uint64_t **month** : 12
The value of Scheduled month for the action

uint64_t **day** : 5
The value of Scheduled day of the month for the action

uint64_t **hour** : 5
The value of Scheduled hour for the action

uint64_t **minute** : 6
The value of Scheduled minute for the action

uint64_t **second** : 6
The value of Scheduled second for the action

uint64_t **day_of_week** : 7
The value of Schedule days of the week for the action

uint64_t **action** : 4
The value of Action to be performed at the scheduled time

uint64_t **trans_time** : 8
The value of Transition time for this action

uint16_t **scene_number**
The value of Scene Number to be used for some actions

struct esp_ble_mesh_scheduler_state_t
Parameters of Scheduler state

Public Members

const uint8_t **schedule_count**
Scheduler count

esp_ble_mesh_schedule_register_t ***schedules**
Up to 16 scheduled entries

struct esp_ble_mesh_scheduler_srv_t
User data of Scheduler Server Model

Public Members

esp_ble_mesh_model_t ***model**
Pointer to the Scheduler Server Model. Initialized internally.

esp_ble_mesh_server_rsp_ctrl_t **rsp_ctrl**
Response control of the server model received messages

esp_ble_mesh_scheduler_state_t ***state**
Parameters of the Scheduler state

struct esp_ble_mesh_scheduler_setup_srv_t
User data of Scheduler Setup Server Model

Public Members

esp_ble_mesh_model_t ***model**
Pointer to the Scheduler Setup Server Model. Initialized internally.

esp_ble_mesh_server_rsp_ctrl_t **rsp_ctrl**
Response control of the server model received messages

esp_ble_mesh_scheduler_state_t ***state**
Parameters of the Scheduler state

struct esp_ble_mesh_state_change_time_set_t
Parameters of Time Set state change event

Public Members

uint8_t **tai_seconds**[5]
The current TAI time in seconds

uint8_t **subsecond**
The sub-second time in units of 1/256 second

uint8_t **uncertainty**
The estimated uncertainty in 10-millisecond steps

uint16_t **time_authority** : 1
0 = No Time Authority, 1 = Time Authority

uint16_t **tai_utc_delta_curr** : 15
Current difference between TAI and UTC in seconds

uint8_t **time_zone_offset_curr**
The local time zone offset in 15-minute increments

struct esp_ble_mesh_state_change_time_status_t
Parameters of Time Status state change event

Public Members

uint8_t **tai_seconds**[5]
The current TAI time in seconds

uint8_t **subsecond**
The sub-second time in units of 1/256 second

uint8_t **uncertainty**
The estimated uncertainty in 10-millisecond steps

uint16_t **time_authority** : 1
0 = No Time Authority, 1 = Time Authority

uint16_t **tai_utc_delta_curr** : 15
Current difference between TAI and UTC in seconds

uint8_t **time_zone_offset_curr**
The local time zone offset in 15-minute increments

struct esp_ble_mesh_state_change_time_zone_set_t
Parameters of Time Zone Set state change event

Public Members

uint8_t **time_zone_offset_new**
Upcoming local time zone offset

uint8_t **tai_zone_change**[5]
TAI Seconds time of the upcoming Time Zone Offset change

struct esp_ble_mesh_state_change_tai_utc_delta_set_t
Parameters of TAI UTC Delta Set state change event

Public Members

uint16_t **tai_utc_delta_new** : 15
Upcoming difference between TAI and UTC in seconds

uint8_t **tai_delta_change**[5]
TAI Seconds time of the upcoming TAI-UTC Delta change

struct esp_ble_mesh_state_change_time_role_set_t
Parameter of Time Role Set state change event

Public Members

uint8_t **time_role**
The Time Role for the element

struct esp_ble_mesh_state_change_scene_store_t
Parameter of Scene Store state change event

Public Members

uint16_t **scene_number**
The number of scenes to be stored

struct esp_ble_mesh_state_change_scene_recall_t
Parameter of Scene Recall state change event

Public Members

uint16_t **scene_number**
The number of scenes to be recalled

struct esp_ble_mesh_state_change_scene_delete_t
Parameter of Scene Delete state change event

Public Members

uint16_t **scene_number**
The number of scenes to be deleted

struct esp_ble_mesh_state_change_scheduler_act_set_t
Parameter of Scheduler Action Set state change event

Public Members

uint64_t **index** : 4
Index of the Schedule Register entry to set

uint64_t **year** : 7
Scheduled year for the action

uint64_t **month** : 12
Scheduled month for the action

uint64_t **day** : 5
Scheduled day of the month for the action

uint64_t **hour** : 5
Scheduled hour for the action

uint64_t **minute** : 6
Scheduled minute for the action

uint64_t **second** : 6
Scheduled second for the action

uint64_t **day_of_week** : 7
Schedule days of the week for the action

uint64_t **action** : 4
Action to be performed at the scheduled time

uint64_t **trans_time** : 8
Transition time for this action

uint16_t **scene_number**
Scene number to be used for some actions

struct esp_ble_mesh_server_recv_scheduler_act_get_t
Context of the received Scheduler Action Get message

Public Members

uint8_t **index**
Index of the Schedule Register entry to get

struct esp_ble_mesh_server_recv_time_set_t
Context of the received Time Set message

Public Members

uint8_t **tai_seconds**[5]
The current TAI time in seconds

uint8_t **subsecond**
The sub-second time in units of 1/256 second

uint8_t **uncertainty**
The estimated uncertainty in 10-millisecond steps

uint16_t **time_authority** : 1
0 = No Time Authority, 1 = Time Authority

uint16_t **tai_utc_delta** : 15
Current difference between TAI and UTC in seconds

uint8_t **time_zone_offset**
The local time zone offset in 15-minute increments

struct esp_ble_mesh_server_recv_time_zone_set_t
Context of the received Time Zone Set message

Public Members

uint8_t **time_zone_offset_new**
Upcoming local time zone offset

uint8_t **tai_zone_change**[5]
TAI Seconds time of the upcoming Time Zone Offset change

struct esp_ble_mesh_server_recv_tai_utc_delta_set_t
Context of the received TAI UTC Delta Set message

Public Members

uint16_t **tai_utc_delta_new** : 15
Upcoming difference between TAI and UTC in seconds

uint16_t **padding** : 1
Always 0b0. Other values are Prohibited.

uint8_t **tai_delta_change**[5]
TAI Seconds time of the upcoming TAI-UTC Delta change

struct esp_ble_mesh_server_recv_time_role_set_t
Context of the received Time Role Set message

Public Members

uint8_t **time_role**
The Time Role for the element

struct esp_ble_mesh_server_recv_scene_store_t
Context of the received Scene Store message

Public Members

uint16_t **scene_number**
The number of scenes to be stored

struct esp_ble_mesh_server_recv_scene_recall_t
Context of the received Scene Recall message

Public Members

bool **op_en**
Indicate if optional parameters are included

uint16_t **scene_number**
The number of scenes to be recalled

uint8_t **tid**
Transaction ID

uint8_t **trans_time**
Time to complete state transition (optional)

uint8_t **delay**
Indicate message execution delay (C.1)

struct esp_ble_mesh_server_recv_scene_delete_t
Context of the received Scene Delete message

Public Members

uint16_t **scene_number**
The number of scenes to be deleted

struct esp_ble_mesh_server_recv_scheduler_act_set_t
Context of the received Scheduler Action Set message

Public Members

uint64_t **index** : 4
Index of the Schedule Register entry to set

uint64_t **year** : 7
Scheduled year for the action

uint64_t **month** : 12
Scheduled month for the action

uint64_t **day** : 5
Scheduled day of the month for the action

uint64_t **hour** : 5
Scheduled hour for the action

uint64_t **minute** : 6
Scheduled minute for the action

uint64_t **second** : 6
Scheduled second for the action

uint64_t **day_of_week** : 7
Schedule days of the week for the action

uint64_t **action** : 4
Action to be performed at the scheduled time

uint64_t **trans_time** : 8
Transition time for this action

uint16_t **scene_number**
Scene number to be used for some actions

struct esp_ble_mesh_server_recv_time_status_t
Context of the received Time Status message

Public Members

uint8_t **tai_seconds**[5]
The current TAI time in seconds

uint8_t **subsecond**
The sub-second time in units of 1/256 second

uint8_t **uncertainty**
The estimated uncertainty in 10-millisecond steps

uint16_t **time_authority** : 1
0 = No Time Authority, 1 = Time Authority

uint16_t **tai_utc_delta** : 15
Current difference between TAI and UTC in seconds

uint8_t **time_zone_offset**
The local time zone offset in 15-minute increments

struct esp_ble_mesh_time_scene_server_cb_param_t
Time Scene Server Model callback parameters

Public Members

esp_ble_mesh_model_t ***model**
Pointer to Time and Scenes Server Models

esp_ble_mesh_msg_ctx_t **ctx**
Context of the received messages

esp_ble_mesh_time_scene_server_cb_value_t **value**
Value of the received Time and Scenes Messages

Macros

ESP_BLE_MESH_MODEL_TIME_CLI(cli_pub, cli_data)

Define a new Time Client Model.

Note This API needs to be called for each element on which the application needs to have a Time Client Model.

Return New Time Client Model instance.

Parameters

- `cli_pub`: Pointer to the unique struct *esp_ble_mesh_model_pub_t*.
- `cli_data`: Pointer to the unique struct *esp_ble_mesh_client_t*.

ESP_BLE_MESH_MODEL_SCENE_CLI(cli_pub, cli_data)

Define a new Scene Client Model.

Note This API needs to be called for each element on which the application needs to have a Scene Client Model.

Return New Scene Client Model instance.

Parameters

- `cli_pub`: Pointer to the unique struct *esp_ble_mesh_model_pub_t*.
- `cli_data`: Pointer to the unique struct *esp_ble_mesh_client_t*.

ESP_BLE_MESH_MODEL_SCHEDULER_CLI(cli_pub, cli_data)

Define a new Scheduler Client Model.

Note This API needs to be called for each element on which the application needs to have a Scheduler Client Model.

Return New Scheduler Client Model instance.

Parameters

- `cli_pub`: Pointer to the unique struct *esp_ble_mesh_model_pub_t*.
- `cli_data`: Pointer to the unique struct *esp_ble_mesh_client_t*.

ESP_BLE_MESH_MODEL_TIME_SRV(srv_pub, srv_data)

Time Scene Server Models related context.

Define a new Time Server Model.

Note 1. The Time Server model is a root model. When this model is present on an Element, the corresponding Time Setup Server model shall also be present.

1. This model shall support model publication and model subscription.

Return New Time Server Model instance.

Parameters

- `srv_pub`: Pointer to the unique struct *esp_ble_mesh_model_pub_t*.
- `srv_data`: Pointer to the unique struct *esp_ble_mesh_time_srv_t*.

ESP_BLE_MESH_MODEL_TIME_SETUP_SRV(srv_data)

Define a new Time Setup Server Model.

Note 1. The Time Setup Server model extends the Time Server model. Time is sensitive information that is propagated across a mesh network.

1. Only an authorized Time Client should be allowed to change the Time and Time Role states. A dedicated application key Bluetooth SIG Proprietary should be used on the Time Setup Server to restrict access to the server to only authorized Time Clients.
2. This model does not support subscribing nor publishing.

Return New Time Setup Server Model instance.

Parameters

- `srv_data`: Pointer to the unique struct *esp_ble_mesh_time_setup_srv_t*.

ESP_BLE_MESH_MODEL_SCENE_SRV(srv_pub, srv_data)

Define a new Scene Server Model.

Note 1. The Scene Server model is a root model. When this model is present on an Element, the corresponding Scene Setup Server model shall also be present.

1. This model shall support model publication and model subscription.
2. The model may be present only on the Primary element of a node.

Return New Scene Server Model instance.

Parameters

- `srv_pub`: Pointer to the unique struct *esp_ble_mesh_model_pub_t*.
- `srv_data`: Pointer to the unique struct *esp_ble_mesh_scene_srv_t*.

ESP_BLE_MESH_MODEL_SCENE_SETUP_SRV(srv_pub, srv_data)

Define a new Scene Setup Server Model.

Note 1. The Scene Setup Server model extends the Scene Server model and the Generic Default Transition Time Server model.

1. This model shall support model subscription.
2. The model may be present only on the Primary element of a node.

Return New Scene Setup Server Model instance.

Parameters

- `srv_pub`: Pointer to the unique struct *esp_ble_mesh_model_pub_t*.
- `srv_data`: Pointer to the unique struct *esp_ble_mesh_scene_setup_srv_t*.

ESP_BLE_MESH_MODEL_SCHEDULER_SRV(srv_pub, srv_data)

Define a new Scheduler Server Model.

Note 1. The Scheduler Server model extends the Scene Server model. When this model is present on an Element, the corresponding Scheduler Setup Server model shall also be present.

1. This model shall support model publication and model subscription.
2. The model may be present only on the Primary element of a node.
3. The model requires the Time Server model shall be present on the element.

Return New Scheduler Server Model instance.

Parameters

- `srv_pub`: Pointer to the unique struct *esp_ble_mesh_model_pub_t*.
- `srv_data`: Pointer to the unique struct *esp_ble_mesh_scheduler_srv_t*.

ESP_BLE_MESH_MODEL_SCHEDULER_SETUP_SRV(srv_pub, srv_data)

Define a new Scheduler Setup Server Model.

Note 1. The Scheduler Setup Server model extends the Scheduler Server and the Scene Setup Server models.

1. This model shall support model subscription.
2. The model may be present only on the Primary element of a node.

Return New Scheduler Setup Server Model instance.

Parameters

- `srv_pub`: Pointer to the unique struct *esp_ble_mesh_model_pub_t*.
- `srv_data`: Pointer to the unique struct *esp_ble_mesh_scheduler_setup_srv_t*.

ESP_BLE_MESH_UNKNOWN_TAI_SECONDS

Unknown TAI Seconds

ESP_BLE_MESH_UNKNOWN_TAI_ZONE_CHANGE

Unknown TAI of Zone Change

ESP_BLE_MESH_UNKNOWN_TAI_DELTA_CHANGE

Unknown TAI of Delta Change

ESP_BLE_MESH_TAI_UTC_DELTA_MAX_VALUE

Maximum TAI-UTC Delta value

ESP_BLE_MESH_TAI_SECONDS_LEN

Length of TAI Seconds

ESP_BLE_MESH_TAI_OF_ZONE_CHANGE_LEN

Length of TAI of Zone Change

ESP_BLE_MESH_TAI_OF_DELTA_CHANGE_LEN

Length of TAI of Delta Change

ESP_BLE_MESH_INVALID_SCENE_NUMBER

Invalid Scene Number

ESP_BLE_MESH_SCENE_NUMBER_LEN

Length of the Scene Number

ESP_BLE_MESH_SCHEDULE_YEAR_ANY_YEAR
Any year of the Scheduled year

ESP_BLE_MESH_SCHEDULE_DAY_ANY_DAY
Any day of the Scheduled day

ESP_BLE_MESH_SCHEDULE_HOUR_ANY_HOUR
Any hour of the Scheduled hour

ESP_BLE_MESH_SCHEDULE_HOUR_ONCE_A_DAY
Any hour of the Scheduled Day

ESP_BLE_MESH_SCHEDULE_SEC_ANY_OF_HOUR
Any minute of the Scheduled hour

ESP_BLE_MESH_SCHEDULE_SEC_EVERY_15_MIN
Every 15 minutes of the Scheduled hour

ESP_BLE_MESH_SCHEDULE_SEC_EVERY_20_MIN
Every 20 minutes of the Scheduled hour

ESP_BLE_MESH_SCHEDULE_SEC_ONCE_AN_HOUR
Once of the Scheduled hour

ESP_BLE_MESH_SCHEDULE_SEC_ANY_OF_MIN
Any second of the Scheduled minute

ESP_BLE_MESH_SCHEDULE_SEC_EVERY_15_SEC
Every 15 seconds of the Scheduled minute

ESP_BLE_MESH_SCHEDULE_SEC_EVERY_20_SEC
Every 20 seconds of the Scheduled minute

ESP_BLE_MESH_SCHEDULE_SEC_ONCE_AN_MIN
Once of the Scheduled minute

ESP_BLE_MESH_SCHEDULE_ACT_TURN_OFF
Scheduled Action - Turn Off

ESP_BLE_MESH_SCHEDULE_ACT_TURN_ON
Scheduled Action - Turn On

ESP_BLE_MESH_SCHEDULE_ACT_SCENE_RECALL
Scheduled Action - Scene Recall

ESP_BLE_MESH_SCHEDULE_ACT_NO_ACTION
Scheduled Action - No Action

ESP_BLE_MESH_SCHEDULE_SCENE_NO_SCENE
Scheduled Scene - No Scene

ESP_BLE_MESH_SCHEDULE_ENTRY_MAX_INDEX
Maximum number of Scheduled entries

ESP_BLE_MESH_TIME_NONE
Time Role - None

ESP_BLE_MESH_TIME_AUTHORITY
Time Role - Mesh Time Authority

ESP_BLE_MESH_TIME_RELAY
Time Role - Mesh Time Relay

ESP_BLE_MESH_TIME_CLINET
Time Role - Mesh Time Client

ESP_BLE_MESH_SCENE_SUCCESS
Scene operation - Success

ESP_BLE_MESH_SCENE_REG_FULL
Scene operation - Scene Register Full

ESP_BLE_MESH_SCENE_NOT_FOUND
Scene operation - Scene Not Found

Type Definitions

typedef void (***esp_ble_mesh_time_scene_client_cb_t**)(*esp_ble_mesh_time_scene_client_cb_event_t* event, *esp_ble_mesh_time_scene_client_cb_param_t* *param)

Bluetooth Mesh Time Scene Client Model function.

Time Scene Client Model callback function type

Parameters
- `event`: Event type
- `param`: Pointer to callback parameter

typedef void (***esp_ble_mesh_time_scene_server_cb_t**)(*esp_ble_mesh_time_scene_server_cb_event_t* event, *esp_ble_mesh_time_scene_server_cb_param_t* *param)

Bluetooth Mesh Time and Scenes Server Model function.

Time Scene Server Model callback function type

Parameters
- `event`: Event type
- `param`: Pointer to callback parameter

Enumerations

enum esp_ble_mesh_time_scene_client_cb_event_t
This enum value is the event of Time Scene Client Model

Values:

ESP_BLE_MESH_TIME_SCENE_CLIENT_GET_STATE_EVT

ESP_BLE_MESH_TIME_SCENE_CLIENT_SET_STATE_EVT

ESP_BLE_MESH_TIME_SCENE_CLIENT_PUBLISH_EVT

ESP_BLE_MESH_TIME_SCENE_CLIENT_TIMEOUT_EVT

ESP_BLE_MESH_TIME_SCENE_CLIENT_EVT_MAX

enum esp_ble_mesh_time_scene_server_cb_event_t
This enum value is the event of Time Scene Server Model

Values:

ESP_BLE_MESH_TIME_SCENE_SERVER_STATE_CHANGE_EVT

1. When get_auto_rsp is set to ESP_BLE_MESH_SERVER_AUTO_RSP, no event will be callback to the application layer when Time Scene Get messages are received.
2. When set_auto_rsp is set to ESP_BLE_MESH_SERVER_AUTO_RSP, this event will be callback to the application layer when Time Scene Set/Set Unack messages are received.

ESP_BLE_MESH_TIME_SCENE_SERVER_RECV_GET_MSG_EVT
When get_auto_rsp is set to ESP_BLE_MESH_SERVER_RSP_BY_APP, this event will be callback to the application layer when Time Scene Get messages are received.

ESP_BLE_MESH_TIME_SCENE_SERVER_RECV_SET_MSG_EVT
When set_auto_rsp is set to ESP_BLE_MESH_SERVER_RSP_BY_APP, this event will be callback to the application layer when Time Scene Set/Set Unack messages are received.

ESP_BLE_MESH_TIME_SCENE_SERVER_RECV_STATUS_MSG_EVT
When status_auto_rsp is set to ESP_BLE_MESH_SERVER_RSP_BY_APP, this event will be callback to the application layer when TIme Status message is received.

ESP_BLE_MESH_TIME_SCENE_SERVER_EVT_MAX

Lighting Client/Server Models

Header File

- bt/esp_ble_mesh/api/models/include/esp_ble_mesh_lighting_model_api.h

Functions

esp_err_t **esp_ble_mesh_register_light_client_callback**(*esp_ble_mesh_light_client_cb_t callback*)

Register BLE Mesh Light Client Model callback.

Return ESP_OK on success or error code otherwise.

Parameters

- `[in] callback`: pointer to the callback function.

esp_err_t **esp_ble_mesh_light_client_get_state**(*esp_ble_mesh_client_common_param_t *params*, *esp_ble_mesh_light_client_get_state_t *get_state*)

Get the value of Light Server Model states using the Light Client Model get messages.

Note If you want to know the opcodes and corresponding meanings accepted by this API, please refer to esp_ble_mesh_light_message_opcode_t in esp_ble_mesh_defs.h

Return ESP_OK on success or error code otherwise.

Parameters

- `[in] params`: Pointer to BLE Mesh common client parameters.
- `[in] get_state`: Pointer of light get message value. Shall not be set to NULL.

esp_err_t **esp_ble_mesh_light_client_set_state**(*esp_ble_mesh_client_common_param_t *params*, *esp_ble_mesh_light_client_set_state_t *set_state*)

Set the value of Light Server Model states using the Light Client Model set messages.

Note If you want to know the opcodes and corresponding meanings accepted by this API, please refer to esp_ble_mesh_light_message_opcode_t in esp_ble_mesh_defs.h

Return ESP_OK on success or error code otherwise.

Parameters

- `[in] params`: Pointer to BLE Mesh common client parameters.
- `[in] set_state`: Pointer of light set message value. Shall not be set to NULL.

esp_err_t **esp_ble_mesh_register_lighting_server_callback**(*esp_ble_mesh_lighting_server_cb_t callback*)

Register BLE Mesh Lighting Server Model callback.

Return ESP_OK on success or error code otherwise.

Parameters

- `[in] callback`: Pointer to the callback function.

Unions

union esp_ble_mesh_light_client_get_state_t

#include <esp_ble_mesh_lighting_model_api.h> Lighting Client Model get message union.

Public Members

esp_ble_mesh_light_lc_property_get_t **lc_property_get**
For ESP_BLE_MESH_MODEL_OP_LIGHT_LC_PROPERTY_GET

union esp_ble_mesh_light_client_set_state_t

#include <esp_ble_mesh_lighting_model_api.h> Lighting Client Model set message union.

Public Members

esp_ble_mesh_light_lightness_set_t **lightness_set**
For ESP_BLE_MESH_MODEL_OP_LIGHT_LIGHTNESS_SET & ESP_BLE_MESH_MODEL_OP_LIGHT_LIGHTNESS_SET_UNACK

esp_ble_mesh_light_lightness_linear_set_t **lightness_linear_set**
For ESP_BLE_MESH_MODEL_OP_LIGHT_LIGHTNESS_LINEAR_SET & ESP_BLE_MESH_MODEL_OP_LIGHT_LIGHTNESS_LINEAR_SET_UNACK

esp_ble_mesh_light_lightness_default_set_t **lightness_default_set**
For ESP_BLE_MESH_MODEL_OP_LIGHT_LIGHTNESS_DEFAULT_SET & ESP_BLE_MESH_MODEL_OP_LIGHT_LIGHTNESS_DEFAULT_SET_UNACK

esp_ble_mesh_light_lightness_range_set_t **lightness_range_set**
For ESP_BLE_MESH_MODEL_OP_LIGHT_LIGHTNESS_RANGE_SET & ESP_BLE_MESH_MODEL_OP_LIGHT_LIGHTNESS_RANGE_SET_UNACK

esp_ble_mesh_light_ctl_set_t **ctl_set**
For ESP_BLE_MESH_MODEL_OP_LIGHT_CTL_SET & ESP_BLE_MESH_MODEL_OP_LIGHT_CTL_SET_UNA

esp_ble_mesh_light_ctl_temperature_set_t **ctl_temperature_set**
For ESP_BLE_MESH_MODEL_OP_LIGHT_CTL_TEMPERATURE_SET & ESP_BLE_MESH_MODEL_OP_LIGHT_CTL_TEMPERATURE_SET_UNACK

esp_ble_mesh_light_ctl_temperature_range_set_t **ctl_temperature_range_set**
For ESP_BLE_MESH_MODEL_OP_LIGHT_CTL_TEMPERATURE_RANGE_SET & ESP_BLE_MESH_MODEL_OP_LIGHT_CTL_TEMPERATURE_RANGE_SET_UNACK

esp_ble_mesh_light_ctl_default_set_t **ctl_default_set**
For ESP_BLE_MESH_MODEL_OP_LIGHT_CTL_DEFAULT_SET & ESP_BLE_MESH_MODEL_OP_LIGHT_CTL_DEFAULT_SET_UNACK

esp_ble_mesh_light_hsl_set_t **hsl_set**
For ESP_BLE_MESH_MODEL_OP_LIGHT_HSL_SET & ESP_BLE_MESH_MODEL_OP_LIGHT_HSL_SET_UNA

esp_ble_mesh_light_hsl_hue_set_t **hsl_hue_set**
For ESP_BLE_MESH_MODEL_OP_LIGHT_HSL_HUE_SET & ESP_BLE_MESH_MODEL_OP_LIGHT_HSL_HUE

esp_ble_mesh_light_hsl_saturation_set_t **hsl_saturation_set**
For ESP_BLE_MESH_MODEL_OP_LIGHT_HSL_SATURATION_SET & ESP_BLE_MESH_MODEL_OP_LIGHT_HSL_SATURATION_SET_UNACK

esp_ble_mesh_light_hsl_default_set_t **hsl_default_set**
For ESP_BLE_MESH_MODEL_OP_LIGHT_HSL_DEFAULT_SET & ESP_BLE_MESH_MODEL_OP_LIGHT_HSL_DEFAULT_SET_UNACK

esp_ble_mesh_light_hsl_range_set_t **hsl_range_set**
For ESP_BLE_MESH_MODEL_OP_LIGHT_HSL_RANGE_SET & ESP_BLE_MESH_MODEL_OP_LIGHT_HSL_RANGE_SET_UNACK

esp_ble_mesh_light_xyl_set_t **xyl_set**
For ESP_BLE_MESH_MODEL_OP_LIGHT_XYL_SET & ESP_BLE_MESH_MODEL_OP_LIGHT_XYL_SET_UNA

esp_ble_mesh_light_xyl_default_set_t **xyl_default_set**
For ESP_BLE_MESH_MODEL_OP_LIGHT_XYL_DEFAULT_SET & ESP_BLE_MESH_MODEL_OP_LIGHT_XYL_DEFAULT_SET_UNACK

esp_ble_mesh_light_xyl_range_set_t **xyl_range_set**
For ESP_BLE_MESH_MODEL_OP_LIGHT_XYL_RANGE_SET & ESP_BLE_MESH_MODEL_OP_LIGHT_XYL_RANGE_SET_UNACK

esp_ble_mesh_light_lc_mode_set_t **lc_mode_set**
For ESP_BLE_MESH_MODEL_OP_LIGHT_LC_MODE_SET & ESP_BLE_MESH_MODEL_OP_LIGHT_LC_MODE_SET_UNACK

esp_ble_mesh_light_lc_om_set_t **lc_om_set**
For ESP_BLE_MESH_MODEL_OP_LIGHT_LC_OM_SET & ESP_BLE_MESH_MODEL_OP_LIGHT_LC_OM_SET

esp_ble_mesh_light_lc_light_onoff_set_t **lc_light_onoff_set**
For ESP_BLE_MESH_MODEL_OP_LIGHT_LC_LIGHT_ONOFF_SET & ESP_BLE_MESH_MODEL_OP_LIGHT_LC_LIGHT_ONOFF_SET_UNACK

esp_ble_mesh_light_lc_property_set_t **lc_property_set**
For ESP_BLE_MESH_MODEL_OP_LIGHT_LC_PROPERTY_SET & ESP_BLE_MESH_MODEL_OP_LIGHT_LC_PROPERTY_SET_UNACK

union esp_ble_mesh_light_client_status_cb_t
#include <esp_ble_mesh_lighting_model_api.h> Lighting Client Model received message union.

Public Members

esp_ble_mesh_light_lightness_status_cb_t **lightness_status**
For ESP_BLE_MESH_MODEL_OP_LIGHT_LIGHTNESS_STATUS

esp_ble_mesh_light_lightness_linear_status_cb_t **lightness_linear_status**
For ESP_BLE_MESH_MODEL_OP_LIGHT_LIGHTNESS_LINEAR_STATUS

esp_ble_mesh_light_lightness_last_status_cb_t **lightness_last_status**
For ESP_BLE_MESH_MODEL_OP_LIGHT_LIGHTNESS_LAST_STATUS

esp_ble_mesh_light_lightness_default_status_cb_t **lightness_default_status**
For ESP_BLE_MESH_MODEL_OP_LIGHT_LIGHTNESS_DEFAULT_STATUS

esp_ble_mesh_light_lightness_range_status_cb_t **lightness_range_status**
For ESP_BLE_MESH_MODEL_OP_LIGHT_LIGHTNESS_RANGE_STATUS

esp_ble_mesh_light_ctl_status_cb_t **ctl_status**
For ESP_BLE_MESH_MODEL_OP_LIGHT_CTL_STATUS

esp_ble_mesh_light_ctl_temperature_status_cb_t **ctl_temperature_status**
For ESP_BLE_MESH_MODEL_OP_LIGHT_CTL_TEMPERATURE_STATUS

esp_ble_mesh_light_ctl_temperature_range_status_cb_t **ctl_temperature_range_status**
For ESP_BLE_MESH_MODEL_OP_LIGHT_CTL_TEMPERATURE_RANGE_STATUS

esp_ble_mesh_light_ctl_default_status_cb_t **ctl_default_status**
For ESP_BLE_MESH_MODEL_OP_LIGHT_CTL_DEFAULT_STATUS

esp_ble_mesh_light_hsl_status_cb_t **hsl_status**
For ESP_BLE_MESH_MODEL_OP_LIGHT_HSL_STATUS

esp_ble_mesh_light_hsl_target_status_cb_t **hsl_target_status**
For ESP_BLE_MESH_MODEL_OP_LIGHT_HSL_TARGET_STATUS

esp_ble_mesh_light_hsl_hue_status_cb_t **hsl_hue_status**
For ESP_BLE_MESH_MODEL_OP_LIGHT_HSL_HUE_STATUS

esp_ble_mesh_light_hsl_saturation_status_cb_t **hsl_saturation_status**
For ESP_BLE_MESH_MODEL_OP_LIGHT_HSL_SATURATION_STATUS

esp_ble_mesh_light_hsl_default_status_cb_t **hsl_default_status**
For ESP_BLE_MESH_MODEL_OP_LIGHT_HSL_DEFAULT_STATUS

esp_ble_mesh_light_hsl_range_status_cb_t **hsl_range_status**
For ESP_BLE_MESH_MODEL_OP_LIGHT_HSL_RANGE_STATUS

esp_ble_mesh_light_xyl_status_cb_t **xyl_status**
For ESP_BLE_MESH_MODEL_OP_LIGHT_XYL_STATUS

esp_ble_mesh_light_xyl_target_status_cb_t **xyl_target_status**
For ESP_BLE_MESH_MODEL_OP_LIGHT_XYL_TARGET_STATUS

esp_ble_mesh_light_xyl_default_status_cb_t **xyl_default_status**
For ESP_BLE_MESH_MODEL_OP_LIGHT_XYL_DEFAULT_STATUS

esp_ble_mesh_light_xyl_range_status_cb_t **xyl_range_status**
For ESP_BLE_MESH_MODEL_OP_LIGHT_XYL_RANGE_STATUS

esp_ble_mesh_light_lc_mode_status_cb_t **lc_mode_status**
For ESP_BLE_MESH_MODEL_OP_LIGHT_LC_MODE_STATUS

esp_ble_mesh_light_lc_om_status_cb_t **lc_om_status**
For ESP_BLE_MESH_MODEL_OP_LIGHT_LC_OM_STATUS

esp_ble_mesh_light_lc_light_onoff_status_cb_t **lc_light_onoff_status**
For ESP_BLE_MESH_MODEL_OP_LIGHT_LC_LIGHT_ONOFF_STATUS

esp_ble_mesh_light_lc_property_status_cb_t **lc_property_status**
For ESP_BLE_MESH_MODEL_OP_LIGHT_LC_PROPERTY_STATUS

union esp_ble_mesh_lighting_server_state_change_t
#include <esp_ble_mesh_lighting_model_api.h> Lighting Server Model state change value union.

Public Members

esp_ble_mesh_state_change_light_lightness_set_t **lightness_set**
The recv_op in ctx can be used to decide which state is changed.Light Lightness Set

esp_ble_mesh_state_change_light_lightness_linear_set_t **lightness_linear_set**
Light Lightness Linear Set

esp_ble_mesh_state_change_light_lightness_default_set_t **lightness_default_set**
Light Lightness Default Set

esp_ble_mesh_state_change_light_lightness_range_set_t **lightness_range_set**
Light Lightness Range Set

esp_ble_mesh_state_change_light_ctl_set_t **ctl_set**
Light CTL Set

esp_ble_mesh_state_change_light_ctl_temperature_set_t **ctl_temp_set**
Light CTL Temperature Set

esp_ble_mesh_state_change_light_ctl_temperature_range_set_t **ctl_temp_range_set**
Light CTL Temperature Range Set

esp_ble_mesh_state_change_light_ctl_default_set_t **ctl_default_set**
Light CTL Default Set

esp_ble_mesh_state_change_light_hsl_set_t **hsl_set**
Light HSL Set

esp_ble_mesh_state_change_light_hsl_hue_set_t **hsl_hue_set**
Light HSL Hue Set

esp_ble_mesh_state_change_light_hsl_saturation_set_t **hsl_saturation_set**
Light HSL Saturation Set

esp_ble_mesh_state_change_light_hsl_default_set_t **hsl_default_set**
Light HSL Default Set

esp_ble_mesh_state_change_light_hsl_range_set_t **hsl_range_set**
Light HSL Range Set

esp_ble_mesh_state_change_light_xyl_set_t **xyl_set**
Light xyL Set

esp_ble_mesh_state_change_light_xyl_default_set_t **xyl_default_set**
Light xyL Default Set

esp_ble_mesh_state_change_light_xyl_range_set_t **xyl_range_set**
Light xyL Range Set

esp_ble_mesh_state_change_light_lc_mode_set_t **lc_mode_set**
Light LC Mode Set

esp_ble_mesh_state_change_light_lc_om_set_t **lc_om_set**
Light LC Occupancy Mode Set

esp_ble_mesh_state_change_light_lc_light_onoff_set_t **lc_light_onoff_set**
Light LC Light OnOff Set

esp_ble_mesh_state_change_light_lc_property_set_t **lc_property_set**
Light LC Property Set

esp_ble_mesh_state_change_sensor_status_t **sensor_status**
Sensor Status

union esp_ble_mesh_lighting_server_recv_get_msg_t
#include <esp_ble_mesh_lighting_model_api.h> Lighting Server Model received get message union.

Public Members

esp_ble_mesh_server_recv_light_lc_property_get_t **lc_property**
Light LC Property Get

union esp_ble_mesh_lighting_server_recv_set_msg_t
#include <esp_ble_mesh_lighting_model_api.h> Lighting Server Model received set message union.

Public Members

esp_ble_mesh_server_recv_light_lightness_set_t **lightness**
Light Lightness Set/Light Lightness Set Unack

esp_ble_mesh_server_recv_light_lightness_linear_set_t **lightness_linear**
Light Lightness Linear Set/Light Lightness Linear Set Unack

esp_ble_mesh_server_recv_light_lightness_default_set_t **lightness_default**
Light Lightness Default Set/Light Lightness Default Set Unack

esp_ble_mesh_server_recv_light_lightness_range_set_t **lightness_range**
Light Lightness Range Set/Light Lightness Range Set Unack

esp_ble_mesh_server_recv_light_ctl_set_t **ctl**
Light CTL Set/Light CTL Set Unack

esp_ble_mesh_server_recv_light_ctl_temperature_set_t **ctl_temp**
Light CTL Temperature Set/Light CTL Temperature Set Unack

esp_ble_mesh_server_recv_light_ctl_temperature_range_set_t **ctl_temp_range**
Light CTL Temperature Range Set/Light CTL Temperature Range Set Unack

esp_ble_mesh_server_recv_light_ctl_default_set_t **ctl_default**
Light CTL Default Set/Light CTL Default Set Unack

esp_ble_mesh_server_recv_light_hsl_set_t **hsl**
Light HSL Set/Light HSL Set Unack

esp_ble_mesh_server_recv_light_hsl_hue_set_t **hsl_hue**
Light HSL Hue Set/Light HSL Hue Set Unack

esp_ble_mesh_server_recv_light_hsl_saturation_set_t **hsl_saturation**
Light HSL Saturation Set/Light HSL Saturation Set Unack

esp_ble_mesh_server_recv_light_hsl_default_set_t **hsl_default**
Light HSL Default Set/Light HSL Default Set Unack

esp_ble_mesh_server_recv_light_hsl_range_set_t **hsl_range**
Light HSL Range Set/Light HSL Range Set Unack

esp_ble_mesh_server_recv_light_xyl_set_t **xyl**
Light xyL Set/Light xyL Set Unack

esp_ble_mesh_server_recv_light_xyl_default_set_t **xyl_default**
Light xyL Default Set/Light xyL Default Set Unack

esp_ble_mesh_server_recv_light_xyl_range_set_t **xyl_range**
Light xyL Range Set/Light xyL Range Set Unack

esp_ble_mesh_server_recv_light_lc_mode_set_t **lc_mode**
Light LC Mode Set/Light LC Mode Set Unack

esp_ble_mesh_server_recv_light_lc_om_set_t **lc_om**
Light LC OM Set/Light LC OM Set Unack

esp_ble_mesh_server_recv_light_lc_light_onoff_set_t **lc_light_onoff**
Light LC Light OnOff Set/Light LC Light OnOff Set Unack

esp_ble_mesh_server_recv_light_lc_property_set_t **lc_property**
Light LC Property Set/Light LC Property Set Unack

union esp_ble_mesh_lighting_server_recv_status_msg_t
#include <esp_ble_mesh_lighting_model_api.h> Lighting Server Model received status message union.

Public Members

esp_ble_mesh_server_recv_sensor_status_t **sensor_status**
Sensor Status

union esp_ble_mesh_lighting_server_cb_value_t
#include <esp_ble_mesh_lighting_model_api.h> Lighting Server Model callback value union.

Public Members

esp_ble_mesh_lighting_server_state_change_t **state_change**
ESP_BLE_MESH_LIGHTING_SERVER_STATE_CHANGE_EVT

esp_ble_mesh_lighting_server_recv_get_msg_t **get**
ESP_BLE_MESH_LIGHTING_SERVER_RECV_GET_MSG_EVT

esp_ble_mesh_lighting_server_recv_set_msg_t **set**
ESP_BLE_MESH_LIGHTING_SERVER_RECV_SET_MSG_EVT

esp_ble_mesh_lighting_server_recv_status_msg_t **status**
ESP_BLE_MESH_LIGHTING_SERVER_RECV_STATUS_MSG_EVT

Structures

struct esp_ble_mesh_light_lightness_set_t
Bluetooth Mesh Light Lightness Client Model Get and Set parameters structure.

Parameters of Light Lightness Set

Public Members

bool **op_en**
Indicate if optional parameters are included

uint16_t **lightness**
Target value of light lightness actual state

uint8_t **tid**
Transaction ID

uint8_t **trans_time**
Time to complete state transition (optional)

uint8_t **delay**
Indicate message execution delay (C.1)

struct esp_ble_mesh_light_lightness_linear_set_t
Parameters of Light Lightness Linear Set

Public Members

bool **op_en**
Indicate if optional parameters are included

uint16_t **lightness**
Target value of light lightness linear state

uint8_t **tid**
Transaction ID

uint8_t **trans_time**
Time to complete state transition (optional)

uint8_t **delay**
Indicate message execution delay (C.1)

struct esp_ble_mesh_light_lightness_default_set_t
Parameter of Light Lightness Default Set

Public Members

uint16_t **lightness**
The value of the Light Lightness Default state

struct esp_ble_mesh_light_lightness_range_set_t
Parameters of Light Lightness Range Set

Public Members

uint16_t **range_min**
Value of range min field of light lightness range state

uint16_t **range_max**
Value of range max field of light lightness range state

struct esp_ble_mesh_light_ctl_set_t
Parameters of Light CTL Set

Public Members

bool **op_en**
Indicate if optional parameters are included

uint16_t **ctl_lightness**
Target value of light ctl lightness state

uint16_t **ctl_temperatrue**
Target value of light ctl temperature state

int16_t **ctl_delta_uv**
Target value of light ctl delta UV state

uint8_t **tid**
Transaction ID

uint8_t **trans_time**
Time to complete state transition (optional)

uint8_t **delay**
Indicate message execution delay (C.1)

struct esp_ble_mesh_light_ctl_temperature_set_t
Parameters of Light CTL Temperature Set

Public Members

bool **op_en**
Indicate if optional parameters are included

uint16_t **ctl_temperatrue**
Target value of light ctl temperature state

int16_t **ctl_delta_uv**
Target value of light ctl delta UV state

uint8_t **tid**
Transaction ID

uint8_t **trans_time**
Time to complete state transition (optional)

uint8_t **delay**
Indicate message execution delay (C.1)

struct esp_ble_mesh_light_ctl_temperature_range_set_t
Parameters of Light CTL Temperature Range Set

Public Members

uint16_t **range_min**
Value of temperature range min field of light ctl temperature range state

uint16_t **range_max**
Value of temperature range max field of light ctl temperature range state

struct esp_ble_mesh_light_ctl_default_set_t
Parameters of Light CTL Default Set

Public Members

uint16_t **lightness**
Value of light lightness default state

uint16_t **temperature**
Value of light temperature default state

int16_t **delta_uv**
Value of light delta UV default state

struct esp_ble_mesh_light_hsl_set_t
Parameters of Light HSL Set

Public Members

bool **op_en**
Indicate if optional parameters are included

uint16_t **hsl_lightness**
Target value of light hsl lightness state

uint16_t **hsl_hue**
Target value of light hsl hue state

uint16_t **hsl_saturation**
Target value of light hsl saturation state

uint8_t **tid**
Transaction ID

uint8_t **trans_time**
Time to complete state transition (optional)

uint8_t **delay**
Indicate message execution delay (C.1)

struct esp_ble_mesh_light_hsl_hue_set_t
Parameters of Light HSL Hue Set

Public Members

bool **op_en**
Indicate if optional parameters are included

uint16_t **hue**
Target value of light hsl hue state

uint8_t **tid**
Transaction ID

uint8_t **trans_time**
Time to complete state transition (optional)

uint8_t **delay**
Indicate message execution delay (C.1)

struct esp_ble_mesh_light_hsl_saturation_set_t
Parameters of Light HSL Saturation Set

Public Members

bool **op_en**
Indicate if optional parameters are included

uint16_t **saturation**
Target value of light hsl hue state

uint8_t **tid**
Transaction ID

uint8_t **trans_time**
Time to complete state transition (optional)

uint8_t **delay**
Indicate message execution delay (C.1)

struct esp_ble_mesh_light_hsl_default_set_t
Parameters of Light HSL Default Set

Public Members

uint16_t **lightness**
Value of light lightness default state

uint16_t **hue**
Value of light hue default state

uint16_t **saturation**
Value of light saturation default state

struct esp_ble_mesh_light_hsl_range_set_t
Parameters of Light HSL Range Set

Public Members

uint16_t **hue_range_min**
Value of hue range min field of light hsl hue range state

uint16_t **hue_range_max**
Value of hue range max field of light hsl hue range state

uint16_t **saturation_range_min**
Value of saturation range min field of light hsl saturation range state

uint16_t **saturation_range_max**
Value of saturation range max field of light hsl saturation range state

struct esp_ble_mesh_light_xyl_set_t
Parameters of Light xyL Set

Public Members

bool **op_en**
Indicate whether optional parameters included

uint16_t **xyl_lightness**
The target value of the Light xyL Lightness state

uint16_t **xyl_x**
The target value of the Light xyL x state

uint16_t **xyl_y**
The target value of the Light xyL y state

uint8_t **tid**
Transaction Identifier

uint8_t **trans_time**
Time to complete state transition (optional)

uint8_t **delay**
Indicate message execution delay (C.1)

struct esp_ble_mesh_light_xyl_default_set_t
Parameters of Light xyL Default Set

Public Members

uint16_t **lightness**
The value of the Light Lightness Default state

uint16_t **xyl_x**
The value of the Light xyL x Default state

uint16_t **xyl_y**
The value of the Light xyL y Default state

struct esp_ble_mesh_light_xyl_range_set_t
Parameters of Light xyL Range Set

Public Members

uint16_t **xyl_x_range_min**
The value of the xyL x Range Min field of the Light xyL x Range state

uint16_t **xyl_x_range_max**
The value of the xyL x Range Max field of the Light xyL x Range state

uint16_t **xyl_y_range_min**
The value of the xyL y Range Min field of the Light xyL y Range state

uint16_t **xyl_y_range_max**
The value of the xyL y Range Max field of the Light xyL y Range state

struct esp_ble_mesh_light_lc_mode_set_t
Parameter of Light LC Mode Set

Public Members

uint8_t **mode**
The target value of the Light LC Mode state

struct esp_ble_mesh_light_lc_om_set_t
Parameter of Light LC OM Set

Public Members

uint8_t **mode**
The target value of the Light LC Occupancy Mode state

struct esp_ble_mesh_light_lc_light_onoff_set_t
Parameters of Light LC Light OnOff Set

Public Members

bool **op_en**
Indicate whether optional parameters included

uint8_t **light_onoff**
The target value of the Light LC Light OnOff state

uint8_t **tid**
Transaction Identifier

uint8_t **trans_time**
Time to complete state transition (optional)

uint8_t **delay**
Indicate message execution delay (C.1)

struct esp_ble_mesh_light_lc_property_get_t
Parameter of Light LC Property Get

Public Members

uint16_t **property_id**
Property ID identifying a Light LC Property

struct esp_ble_mesh_light_lc_property_set_t
Parameters of Light LC Property Set

Public Members

uint16_t **property_id**
Property ID identifying a Light LC Property

struct net_buf_simple ***property_value**
Raw value for the Light LC Property

struct esp_ble_mesh_light_lightness_status_cb_t
Bluetooth Mesh Light Lightness Client Model Get and Set callback parameters structure.

Parameters of Light Lightness Status

Public Members

bool **op_en**
Indicate if optional parameters are included

uint16_t **present_lightness**
Current value of light lightness actual state

uint16_t **target_lightness**
Target value of light lightness actual state (optional)

uint8_t **remain_time**
Time to complete state transition (C.1)

struct esp_ble_mesh_light_lightness_linear_status_cb_t
Parameters of Light Lightness Linear Status

Public Members

bool **op_en**
Indicate if optional parameters are included

uint16_t **present_lightness**
Current value of light lightness linear state

uint16_t **target_lightness**
Target value of light lightness linear state (optional)

uint8_t **remain_time**
Time to complete state transition (C.1)

struct esp_ble_mesh_light_lightness_last_status_cb_t
Parameter of Light Lightness Last Status

Public Members

uint16_t **lightness**
The value of the Light Lightness Last state

struct esp_ble_mesh_light_lightness_default_status_cb_t
Parameter of Light Lightness Default Status

Public Members

uint16_t **lightness**
The value of the Light Lightness default State

struct esp_ble_mesh_light_lightness_range_status_cb_t
Parameters of Light Lightness Range Status

Public Members

uint8_t **status_code**
Status Code for the request message

uint16_t **range_min**
Value of range min field of light lightness range state

uint16_t **range_max**
Value of range max field of light lightness range state

struct esp_ble_mesh_light_ctl_status_cb_t
Parameters of Light CTL Status

Public Members

bool **op_en**
Indicate if optional parameters are included

uint16_t **present_ctl_lightness**
Current value of light ctl lightness state

uint16_t **present_ctl_temperature**
Current value of light ctl temperature state

uint16_t **target_ctl_lightness**
Target value of light ctl lightness state (optional)

uint16_t **target_ctl_temperature**
Target value of light ctl temperature state (C.1)

uint8_t **remain_time**
Time to complete state transition (C.1)

struct esp_ble_mesh_light_ctl_temperature_status_cb_t
Parameters of Light CTL Temperature Status

Public Members

bool **op_en**
Indicate if optional parameters are included

uint16_t **present_ctl_temperature**
Current value of light ctl temperature state

uint16_t **present_ctl_delta_uv**
Current value of light ctl delta UV state

uint16_t **target_ctl_temperature**
Target value of light ctl temperature state (optional)

uint16_t **target_ctl_delta_uv**
Target value of light ctl delta UV state (C.1)

uint8_t **remain_time**
Time to complete state transition (C.1)

struct esp_ble_mesh_light_ctl_temperature_range_status_cb_t
Parameters of Light CTL Temperature Range Status

Public Members

uint8_t **status_code**
Status code for the request message

uint16_t **range_min**
Value of temperature range min field of light ctl temperature range state

uint16_t **range_max**
Value of temperature range max field of light ctl temperature range state

struct esp_ble_mesh_light_ctl_default_status_cb_t
Parameters of Light CTL Default Status

Public Members

uint16_t **lightness**
Value of light lightness default state

uint16_t **temperature**
Value of light temperature default state

int16_t **delta_uv**
Value of light delta UV default state

struct esp_ble_mesh_light_hsl_status_cb_t
Parameters of Light HSL Status

Public Members

bool **op_en**
Indicate if optional parameters are included

uint16_t **hsl_lightness**
Current value of light hsl lightness state

uint16_t **hsl_hue**
Current value of light hsl hue state

uint16_t **hsl_saturation**
Current value of light hsl saturation state

uint8_t **remain_time**
Time to complete state transition (optional)

struct esp_ble_mesh_light_hsl_target_status_cb_t
Parameters of Light HSL Target Status

Public Members

bool **op_en**
Indicate if optional parameters are included

uint16_t **hsl_lightness_target**
Target value of light hsl lightness state

uint16_t **hsl_hue_target**
Target value of light hsl hue state

uint16_t **hsl_saturation_target**
Target value of light hsl saturation state

uint8_t **remain_time**
Time to complete state transition (optional)

struct esp_ble_mesh_light_hsl_hue_status_cb_t
Parameters of Light HSL Hue Status

Public Members

bool **op_en**
Indicate if optional parameters are included

uint16_t **present_hue**
Current value of light hsl hue state

uint16_t **target_hue**
Target value of light hsl hue state (optional)

uint8_t **remain_time**
Time to complete state transition (C.1)

struct esp_ble_mesh_light_hsl_saturation_status_cb_t
Parameters of Light HSL Saturation Status

Public Members

bool **op_en**
Indicate if optional parameters are included

uint16_t **present_saturation**
Current value of light hsl saturation state

uint16_t **target_saturation**
Target value of light hsl saturation state (optional)

uint8_t **remain_time**
Time to complete state transition (C.1)

struct esp_ble_mesh_light_hsl_default_status_cb_t
Parameters of Light HSL Default Status

Public Members

uint16_t **lightness**
Value of light lightness default state

uint16_t **hue**
Value of light hue default state

uint16_t **saturation**
Value of light saturation default state

struct esp_ble_mesh_light_hsl_range_status_cb_t
Parameters of Light HSL Range Status

Public Members

uint8_t **status_code**
Status code for the request message

uint16_t **hue_range_min**
Value of hue range min field of light hsl hue range state

uint16_t **hue_range_max**
Value of hue range max field of light hsl hue range state

uint16_t **saturation_range_min**
Value of saturation range min field of light hsl saturation range state

uint16_t **saturation_range_max**
Value of saturation range max field of light hsl saturation range state

struct esp_ble_mesh_light_xyl_status_cb_t
Parameters of Light xyL Status

Public Members

bool **op_en**
Indicate whether optional parameters included

uint16_t **xyl_lightness**
The present value of the Light xyL Lightness state

uint16_t **xyl_x**
The present value of the Light xyL x state

uint16_t **xyl_y**
The present value of the Light xyL y state

uint8_t **remain_time**
Time to complete state transition (optional)

struct esp_ble_mesh_light_xyl_target_status_cb_t
Parameters of Light xyL Target Status

Public Members

bool **op_en**
Indicate whether optional parameters included

uint16_t **target_xyl_lightness**
The target value of the Light xyL Lightness state

uint16_t **target_xyl_x**
The target value of the Light xyL x state

uint16_t **target_xyl_y**
The target value of the Light xyL y state

uint8_t **remain_time**
Time to complete state transition (optional)

struct esp_ble_mesh_light_xyl_default_status_cb_t
Parameters of Light xyL Default Status

Public Members

uint16_t **lightness**
The value of the Light Lightness Default state

uint16_t **xyl_x**
The value of the Light xyL x Default state

uint16_t **xyl_y**
The value of the Light xyL y Default state

struct esp_ble_mesh_light_xyl_range_status_cb_t
Parameters of Light xyL Range Status

Public Members

uint8_t **status_code**
Status Code for the requesting message

uint16_t **xyl_x_range_min**
The value of the xyL x Range Min field of the Light xyL x Range state

uint16_t **xyl_x_range_max**
The value of the xyL x Range Max field of the Light xyL x Range state

uint16_t **xyl_y_range_min**
The value of the xyL y Range Min field of the Light xyL y Range state

uint16_t **xyl_y_range_max**
The value of the xyL y Range Max field of the Light xyL y Range state

struct esp_ble_mesh_light_lc_mode_status_cb_t
Parameter of Light LC Mode Status

Public Members

uint8_t **mode**
The present value of the Light LC Mode state

struct esp_ble_mesh_light_lc_om_status_cb_t
Parameter of Light LC OM Status

Public Members

uint8_t **mode**
The present value of the Light LC Occupancy Mode state

struct esp_ble_mesh_light_lc_light_onoff_status_cb_t
Parameters of Light LC Light OnOff Status

Public Members

bool **op_en**
Indicate whether optional parameters included

uint8_t **present_light_onoff**
The present value of the Light LC Light OnOff state

uint8_t **target_light_onoff**
The target value of the Light LC Light OnOff state (Optional)

uint8_t **remain_time**
Time to complete state transition (C.1)

struct esp_ble_mesh_light_lc_property_status_cb_t
Parameters of Light LC Property Status

Public Members

uint16_t **property_id**
Property ID identifying a Light LC Property

struct net_buf_simple ***property_value**
Raw value for the Light LC Property

struct esp_ble_mesh_light_client_cb_param_t
Lighting Client Model callback parameters

Public Members

int **error_code**
Appropriate error code

esp_ble_mesh_client_common_param_t ***params**
The client common parameters.

esp_ble_mesh_light_client_status_cb_t **status_cb**
The light status message callback values

struct esp_ble_mesh_light_lightness_state_t
Parameters of Light Lightness state

Public Members

uint16_t **lightness_linear**
The present value of Light Lightness Linear state

uint16_t **target_lightness_linear**
The target value of Light Lightness Linear state

uint16_t **lightness_actual**
The present value of Light Lightness Actual state

uint16_t **target_lightness_actual**
The target value of Light Lightness Actual state

uint16_t **lightness_last**
The value of Light Lightness Last state

uint16_t **lightness_default**
The value of Light Lightness Default state

uint8_t **status_code**
The status code of setting Light Lightness Range state

uint16_t **lightness_range_min**
The minimum value of Light Lightness Range state

uint16_t **lightness_range_max**
The maximum value of Light Lightness Range state

struct esp_ble_mesh_light_lightness_srv_t
User data of Light Lightness Server Model

Public Members

esp_ble_mesh_model_t ***model**
Pointer to the Lighting Lightness Server Model. Initialized internally.

esp_ble_mesh_server_rsp_ctrl_t **rsp_ctrl**
Response control of the server model received messages

esp_ble_mesh_light_lightness_state_t ***state**
Parameters of the Light Lightness state

esp_ble_mesh_last_msg_info_t **last**
Parameters of the last received set message

esp_ble_mesh_state_transition_t **actual_transition**
Parameters of state transition

esp_ble_mesh_state_transition_t **linear_transition**
Parameters of state transition

int32_t **tt_delta_lightness_actual**
Delta change value of lightness actual state transition

int32_t **tt_delta_lightness_linear**
Delta change value of lightness linear state transition

struct esp_ble_mesh_light_lightness_setup_srv_t
User data of Light Lightness Setup Server Model

Public Members

esp_ble_mesh_model_t ***model**
Pointer to the Lighting Lightness Setup Server Model. Initialized internally.

esp_ble_mesh_server_rsp_ctrl_t **rsp_ctrl**
Response control of the server model received messages

esp_ble_mesh_light_lightness_state_t ***state**
Parameters of the Light Lightness state

struct esp_ble_mesh_light_ctl_state_t
Parameters of Light CTL state

Public Members

uint16_t **lightness**
The present value of Light CTL Lightness state

uint16_t **target_lightness**
The target value of Light CTL Lightness state

uint16_t **temperature**
The present value of Light CTL Temperature state

uint16_t **target_temperature**
The target value of Light CTL Temperature state

int16_t **delta_uv**
The present value of Light CTL Delta UV state

int16_t **target_delta_uv**
The target value of Light CTL Delta UV state

uint8_t **status_code**
The statue code of setting Light CTL Temperature Range state

uint16_t **temperature_range_min**
The minimum value of Light CTL Temperature Range state

uint16_t **temperature_range_max**
The maximum value of Light CTL Temperature Range state

uint16_t **lightness_default**
The value of Light Lightness Default state

uint16_t **temperature_default**
The value of Light CTL Temperature Default state

int16_t **delta_uv_default**
The value of Light CTL Delta UV Default state

struct esp_ble_mesh_light_ctl_srv_t
User data of Light CTL Server Model

Public Members

esp_ble_mesh_model_t ***model**
Pointer to the Lighting CTL Server Model. Initialized internally.

esp_ble_mesh_server_rsp_ctrl_t **rsp_ctrl**
Response control of the server model received messages

esp_ble_mesh_light_ctl_state_t ***state**
Parameters of the Light CTL state

esp_ble_mesh_last_msg_info_t **last**
Parameters of the last received set message

esp_ble_mesh_state_transition_t **transition**
Parameters of state transition

int32_t **tt_delta_lightness**
Delta change value of lightness state transition

int32_t **tt_delta_temperature**
Delta change value of temperature state transition

int32_t **tt_delta_delta_uv**
Delta change value of delta uv state transition

struct esp_ble_mesh_light_ctl_setup_srv_t
User data of Light CTL Setup Server Model

Public Members

esp_ble_mesh_model_t ***model**
Pointer to the Lighting CTL Setup Server Model. Initialized internally.

esp_ble_mesh_server_rsp_ctrl_t **rsp_ctrl**
Response control of the server model received messages

esp_ble_mesh_light_ctl_state_t ***state**
Parameters of the Light CTL state

struct esp_ble_mesh_light_ctl_temp_srv_t
User data of Light CTL Temperature Server Model

Public Members

esp_ble_mesh_model_t ***model**
Pointer to the Lighting CTL Temperature Server Model. Initialized internally.

esp_ble_mesh_server_rsp_ctrl_t **rsp_ctrl**
Response control of the server model received messages

esp_ble_mesh_light_ctl_state_t ***state**
Parameters of the Light CTL state

esp_ble_mesh_last_msg_info_t **last**
Parameters of the last received set message

esp_ble_mesh_state_transition_t **transition**
Parameters of state transition

int32_t **tt_delta_temperature**
Delta change value of temperature state transition

int32_t **tt_delta_delta_uv**
Delta change value of delta uv state transition

struct esp_ble_mesh_light_hsl_state_t
Parameters of Light HSL state

Public Members

uint16_t **lightness**
The present value of Light HSL Lightness state

uint16_t **target_lightness**
The target value of Light HSL Lightness state

uint16_t **hue**
The present value of Light HSL Hue state

uint16_t **target_hue**
The target value of Light HSL Hue state

uint16_t **saturation**
The present value of Light HSL Saturation state

uint16_t **target_saturation**
The target value of Light HSL Saturation state

uint16_t **lightness_default**
The value of Light Lightness Default state

uint16_t **hue_default**
The value of Light HSL Hue Default state

uint16_t **saturation_default**
The value of Light HSL Saturation Default state

uint8_t **status_code**
The status code of setting Light HSL Hue & Saturation Range state

uint16_t **hue_range_min**
The minimum value of Light HSL Hue Range state

uint16_t **hue_range_max**
The maximum value of Light HSL Hue Range state

uint16_t **saturation_range_min**
The minimum value of Light HSL Saturation state

uint16_t **saturation_range_max**
The maximum value of Light HSL Saturation state

struct esp_ble_mesh_light_hsl_srv_t
User data of Light HSL Server Model

Public Members

esp_ble_mesh_model_t ***model**
Pointer to the Lighting HSL Server Model. Initialized internally.

esp_ble_mesh_server_rsp_ctrl_t **rsp_ctrl**
Response control of the server model received messages

esp_ble_mesh_light_hsl_state_t ***state**
Parameters of the Light HSL state

esp_ble_mesh_last_msg_info_t **last**
Parameters of the last received set message

esp_ble_mesh_state_transition_t **transition**
Parameters of state transition

int32_t **tt_delta_lightness**
Delta change value of lightness state transition

int32_t **tt_delta_hue**
Delta change value of hue state transition

int32_t **tt_delta_saturation**
Delta change value of saturation state transition

struct esp_ble_mesh_light_hsl_setup_srv_t
User data of Light HSL Setup Server Model

Public Members

esp_ble_mesh_model_t ***model**
Pointer to the Lighting HSL Setup Server Model. Initialized internally.

esp_ble_mesh_server_rsp_ctrl_t **rsp_ctrl**
Response control of the server model received messages

esp_ble_mesh_light_hsl_state_t ***state**
Parameters of the Light HSL state

struct esp_ble_mesh_light_hsl_hue_srv_t
User data of Light HSL Hue Server Model

Public Members

esp_ble_mesh_model_t ***model**
Pointer to the Lighting HSL Hue Server Model. Initialized internally.

esp_ble_mesh_server_rsp_ctrl_t **rsp_ctrl**
Response control of the server model received messages

esp_ble_mesh_light_hsl_state_t ***state**
Parameters of the Light HSL state

esp_ble_mesh_last_msg_info_t **last**
Parameters of the last received set message

esp_ble_mesh_state_transition_t **transition**
Parameters of state transition

int32_t **tt_delta_hue**
Delta change value of hue state transition

struct esp_ble_mesh_light_hsl_sat_srv_t
User data of Light HSL Saturation Server Model

Public Members

esp_ble_mesh_model_t ***model**
Pointer to the Lighting HSL Saturation Server Model. Initialized internally.

esp_ble_mesh_server_rsp_ctrl_t **rsp_ctrl**
Response control of the server model received messages

esp_ble_mesh_light_hsl_state_t ***state**
Parameters of the Light HSL state

esp_ble_mesh_last_msg_info_t **last**
Parameters of the last received set message

esp_ble_mesh_state_transition_t **transition**
Parameters of state transition

int32_t **tt_delta_saturation**
Delta change value of saturation state transition

struct esp_ble_mesh_light_xyl_state_t
Parameters of Light xyL state

Public Members

uint16_t **lightness**
The present value of Light xyL Lightness state

uint16_t **target_lightness**
The target value of Light xyL Lightness state

uint16_t **x**
The present value of Light xyL x state

uint16_t **target_x**
The target value of Light xyL x state

uint16_t **y**
The present value of Light xyL y state

uint16_t **target_y**
The target value of Light xyL y state

uint16_t **lightness_default**
The value of Light Lightness Default state

uint16_t **x_default**
The value of Light xyL x Default state

uint16_t **y_default**
The value of Light xyL y Default state

uint8_t **status_code**
The status code of setting Light xyL x & y Range state

uint16_t **x_range_min**
The minimum value of Light xyL x Range state

uint16_t **x_range_max**
The maximum value of Light xyL x Range state

uint16_t **y_range_min**
The minimum value of Light xyL y Range state

uint16_t **y_range_max**
The maximum value of Light xyL y Range state

struct esp_ble_mesh_light_xyl_srv_t
User data of Light xyL Server Model

Public Members

esp_ble_mesh_model_t ***model**
Pointer to the Lighting xyL Server Model. Initialized internally.

esp_ble_mesh_server_rsp_ctrl_t **rsp_ctrl**
Response control of the server model received messages

esp_ble_mesh_light_xyl_state_t ***state**
Parameters of the Light xyL state

esp_ble_mesh_last_msg_info_t **last**
Parameters of the last received set message

esp_ble_mesh_state_transition_t **transition**
Parameters of state transition

int32_t **tt_delta_lightness**
Delta change value of lightness state transition

int32_t **tt_delta_x**
Delta change value of x state transition

int32_t **tt_delta_y**
Delta change value of y state transition

struct esp_ble_mesh_light_xyl_setup_srv_t
User data of Light xyL Setup Server Model

Public Members

esp_ble_mesh_model_t ***model**
Pointer to the Lighting xyL Setup Server Model. Initialized internally.

esp_ble_mesh_server_rsp_ctrl_t **rsp_ctrl**
Response control of the server model received messages

esp_ble_mesh_light_xyl_state_t ***state**
Parameters of the Light xyL state

struct esp_ble_mesh_light_lc_state_t
Parameters of Light LC states

Public Members

uint32_t **mode** : 1
0b0 The controller is turned off.

- The binding with the Light Lightness state is disabled. 0b1 The controller is turned on.
- The binding with the Light Lightness state is enabled.The value of Light LC Mode state

uint32_t **occupancy_mode** : 1
The value of Light LC Occupancy Mode state

uint32_t **light_onoff** : 1
The present value of Light LC Light OnOff state

uint32_t **target_light_onoff** : 1
The target value of Light LC Light OnOff state

uint32_t **occupancy** : 1
The value of Light LC Occupancy state

uint32_t **ambient_luxlevel** : 24
The value of Light LC Ambient LuxLevel state

uint16_t **linear_output**

1. Light LC Linear Output = max((Lightness Out)^2/65535, Regulator Output)
2. If the Light LC Mode state is set to 0b1, the binding is enabled and upon a change of the Light LC Linear Output state, the following operation shall be performed: Light Lightness Linear = Light LC Linear Output
3. If the Light LC Mode state is set to 0b0, the binding is disabled (i.e., upon a change of the Light LC Linear Output state, no operation on the Light Lightness Linear state is performed).The value of Light LC Linear Output state

struct esp_ble_mesh_light_lc_property_state_t
Parameters of Light Property states. The Light LC Property states are read / write states that determine the configuration of a Light Lightness Controller. Each state is represented by a device property and is controlled by Light LC Property messages.

Public Members

uint32_t **time_occupancy_delay**
A timing state that determines the delay for changing the Light LC Occupancy state upon receiving a Sensor Status message from an occupancy sensor.The value of Light LC Time Occupancy Delay state

uint32_t **time_fade_on**
A timing state that determines the time the controlled lights fade to the level determined by the Light LC Lightness On state.The value of Light LC Time Fade On state

uint32_t **time_run_on**
A timing state that determines the time the controlled lights stay at the level determined by the Light LC Lightness On state.The value of Light LC Time Run On state

uint32_t **time_fade**
A timing state that determines the time the controlled lights fade from the level determined by the Light LC Lightness On state to the level determined by the Light Lightness Prolong state.The value of Light LC Time Fade state

uint32_t **time_prolong**
A timing state that determines the time the controlled lights stay at the level determined by the Light LC Lightness Prolong state.The value of Light LC Time Prolong state

uint32_t **time_fade_standby_auto**
A timing state that determines the time the controlled lights fade from the level determined by the Light LC Lightness Prolong state to the level determined by the Light LC Lightness Standby state when the transition is automatic.The value of Light LC Time Fade Standby Auto state

uint32_t **time_fade_standby_manual**
A timing state that determines the time the controlled lights fade from the level determined by the Light LC Lightness Prolong state to the level determined by the Light LC Lightness Standby state when the transition is triggered by a change in the Light LC Light OnOff state.The value of Light LC Time Fade Standby Manual state

uint16_t **lightness_on**
A lightness state that determines the perceptive light lightness at the Occupancy and Run internal controller states.The value of Light LC Lightness On state

uint16_t **lightness_prolong**
A lightness state that determines the light lightness at the Prolong internal controller state.The value of Light LC Lightness Prolong state

uint16_t **lightness_standby**
A lightness state that determines the light lightness at the Standby internal controller state.The value of Light LC Lightness Standby state

uint16_t **ambient_luxlevel_on**
A uint16 state representing the Ambient LuxLevel level that determines if the controller transitions from the Light Control Standby state.The value of Light LC Ambient LuxLevel On state

uint16_t **ambient_luxlevel_prolong**
A uint16 state representing the required Ambient LuxLevel level in the Prolong state.The value of Light LC Ambient LuxLevel Prolong state

uint16_t **ambient_luxlevel_standby**
A uint16 state representing the required Ambient LuxLevel level in the Standby state.The value of Light LC Ambient LuxLevel Standby state

float **regulator_kiu**
A float32 state representing the integral coefficient that determines the integral part of the equation defining the output of the Light LC PI Feedback Regulator, when Light LC Ambient LuxLevel is less than LuxLevel Out. Valid range: 0.0 ~ 1000.0. The default value is 250.0.The value of Light LC Regulator Kiu state

float **regulator_kid**
A float32 state representing the integral coefficient that determines the integral part of the equation defining the output of the Light LC PI Feedback Regulator, when Light LC Ambient LuxLevel is greater than or equal to the value of the LuxLevel Out state. Valid range: 0.0 ~ 1000.0. The default value is 25.0.The value of Light LC Regulator Kid state

float **regulator_kpu**
A float32 state representing the proportional coefficient that determines the proportional part of the equation defining the output of the Light LC PI Feedback Regulator, when Light LC Ambient LuxLevel is less than the value of the LuxLevel Out state. Valid range: 0.0 ~ 1000.0. The default value is 80.0.The value of Light LC Regulator Kpu state

float **regulator_kpd**
A float32 state representing the proportional coefficient that determines the proportional part of the equation defining the output of the Light LC PI Feedback Regulator, when Light LC Ambient LuxLevel is greater than or equal to the value of the LuxLevel Out state. Valid range: 0.0 ~ 1000.0. The default value is 80.0.The value of Light LC Regulator Kpd state

int8_t **regulator_accuracy**
A int8 state representing the percentage accuracy of the Light LC PI Feedback Regulator. Valid range: 0.0 ~ 100.0. The default value is 2.0.The value of Light LC Regulator Accuracy state

uint32_t **set_occupancy_to_1_delay**
If the message Raw field contains a Raw Value for the Time Since Motion Sensed device property, which represents a value less than or equal to the value of the Light LC Occupancy Delay state, it shall delay setting the Light LC Occupancy state to 0b1 by the difference between the value of the Light LC Occupancy Delay state and the received Time Since Motion value. The value of the difference between value of the Light LC Occupancy Delay state and the received Time Since Motion value

struct esp_ble_mesh_light_lc_state_machine_t
Parameters of Light LC state machine

Public Members

uint8_t **fade_on**
The value of transition time of Light LC Time Fade On

uint8_t **fade**
The value of transition time of Light LC Time Fade

uint8_t **fade_standby_auto**
The value of transition time of Light LC Time Fade Standby Auto

uint8_t **fade_standby_manual**
The value of transition time of Light LC Time Fade Standby Manual

struct *esp_ble_mesh_light_lc_state_machine_t*::**[anonymous]** **trans_time**
The Fade On, Fade, Fade Standby Auto, and Fade Standby Manual states are transition states that define the transition of the Lightness Out and LuxLevel Out states. This transition can be started as a result of the Light LC State Machine change or as a result of receiving the Light LC Light OnOff Set or Light LC Light Set Unacknowledged message.The value of transition time

esp_ble_mesh_lc_state_t **state**
The value of Light LC state machine state

struct k_delayed_work **timer**
Timer of Light LC state machine

struct esp_ble_mesh_light_control_t
Parameters of Light Lightness controller

Public Members

esp_ble_mesh_light_lc_state_t **state**
Parameters of Light LC state

esp_ble_mesh_light_lc_property_state_t **prop_state**
Parameters of Light LC Property state

esp_ble_mesh_light_lc_state_machine_t **state_machine**
Parameters of Light LC state machine

struct esp_ble_mesh_light_lc_srv_t
User data of Light LC Server Model

Public Members

esp_ble_mesh_model_t ***model**
Pointer to the Lighting LC Server Model. Initialized internally.

esp_ble_mesh_server_rsp_ctrl_t **rsp_ctrl**
Response control of the server model received messages

esp_ble_mesh_light_control_t ***lc**
Parameters of the Light controller

esp_ble_mesh_last_msg_info_t **last**
Parameters of the last received set message

esp_ble_mesh_state_transition_t **transition**
Parameters of state transition

struct esp_ble_mesh_light_lc_setup_srv_t
User data of Light LC Setup Server Model

Public Members

esp_ble_mesh_model_t ***model**
Pointer to the Lighting LC Setup Server Model. Initialized internally.

esp_ble_mesh_server_rsp_ctrl_t **rsp_ctrl**
Response control of the server model received messages

esp_ble_mesh_light_control_t ***lc**
Parameters of the Light controller

struct esp_ble_mesh_state_change_light_lightness_set_t
Parameter of Light Lightness Actual state change event

Public Members

uint16_t **lightness**
The value of Light Lightness Actual state

struct esp_ble_mesh_state_change_light_lightness_linear_set_t
Parameter of Light Lightness Linear state change event

Public Members

uint16_t **lightness**
The value of Light Lightness Linear state

struct esp_ble_mesh_state_change_light_lightness_default_set_t
Parameter of Light Lightness Default state change event

Public Members

uint16_t **lightness**
The value of Light Lightness Default state

struct esp_ble_mesh_state_change_light_lightness_range_set_t
Parameters of Light Lightness Range state change event

Public Members

uint16_t **range_min**
The minimum value of Light Lightness Range state

uint16_t **range_max**
The maximum value of Light Lightness Range state

struct esp_ble_mesh_state_change_light_ctl_set_t
Parameters of Light CTL state change event

Public Members

uint16_t **lightness**
The value of Light CTL Lightness state

uint16_t **temperature**
The value of Light CTL Temperature state

int16_t **delta_uv**
The value of Light CTL Delta UV state

struct esp_ble_mesh_state_change_light_ctl_temperature_set_t
Parameters of Light CTL Temperature state change event

Public Members

uint16_t **temperature**
The value of Light CTL Temperature state

int16_t **delta_uv**
The value of Light CTL Delta UV state

struct esp_ble_mesh_state_change_light_ctl_temperature_range_set_t
Parameters of Light CTL Temperature Range state change event

Public Members

uint16_t **range_min**
The minimum value of Light CTL Temperature Range state

uint16_t **range_max**
The maximum value of Light CTL Temperature Range state

struct esp_ble_mesh_state_change_light_ctl_default_set_t
Parameters of Light CTL Default state change event

Public Members

uint16_t **lightness**
The value of Light Lightness Default state

uint16_t **temperature**
The value of Light CTL Temperature Default state

int16_t **delta_uv**
The value of Light CTL Delta UV Default state

struct esp_ble_mesh_state_change_light_hsl_set_t
Parameters of Light HSL state change event

Public Members

uint16_t **lightness**
The value of Light HSL Lightness state

uint16_t **hue**
The value of Light HSL Hue state

uint16_t **saturation**
The value of Light HSL Saturation state

struct esp_ble_mesh_state_change_light_hsl_hue_set_t
Parameter of Light HSL Hue state change event

Public Members

uint16_t **hue**
The value of Light HSL Hue state

struct esp_ble_mesh_state_change_light_hsl_saturation_set_t
Parameter of Light HSL Saturation state change event

Public Members

uint16_t **saturation**
The value of Light HSL Saturation state

struct esp_ble_mesh_state_change_light_hsl_default_set_t
Parameters of Light HSL Default state change event

Public Members

uint16_t **lightness**
The value of Light HSL Lightness Default state

uint16_t **hue**
The value of Light HSL Hue Default state

uint16_t **saturation**
The value of Light HSL Saturation Default state

struct esp_ble_mesh_state_change_light_hsl_range_set_t
Parameters of Light HSL Range state change event

Public Members

uint16_t **hue_range_min**
The minimum hue value of Light HSL Range state

uint16_t **hue_range_max**
The maximum hue value of Light HSL Range state

uint16_t **saturation_range_min**
The minimum saturation value of Light HSL Range state

uint16_t **saturation_range_max**
The maximum saturation value of Light HSL Range state

struct esp_ble_mesh_state_change_light_xyl_set_t
Parameters of Light xyL state change event

Public Members

uint16_t **lightness**
The value of Light xyL Lightness state

uint16_t **x**
The value of Light xyL x state

uint16_t **y**
The value of Light xyL y state

struct esp_ble_mesh_state_change_light_xyl_default_set_t
Parameters of Light xyL Default state change event

Public Members

uint16_t **lightness**
The value of Light Lightness Default state

uint16_t **x**
The value of Light xyL x Default state

uint16_t **y**
The value of Light xyL y Default state

struct esp_ble_mesh_state_change_light_xyl_range_set_t
Parameters of Light xyL Range state change event

Public Members

uint16_t **x_range_min**
The minimum value of Light xyL x Range state

uint16_t **x_range_max**
The maximum value of Light xyL x Range state

uint16_t **y_range_min**
The minimum value of Light xyL y Range state

uint16_t **y_range_max**
The maximum value of Light xyL y Range state

struct esp_ble_mesh_state_change_light_lc_mode_set_t
Parameter of Light LC Mode state change event

Public Members

uint8_t **mode**
The value of Light LC Mode state

struct esp_ble_mesh_state_change_light_lc_om_set_t
Parameter of Light LC Occupancy Mode state change event

Public Members

uint8_t **mode**
The value of Light LC Occupancy Mode state

struct esp_ble_mesh_state_change_light_lc_light_onoff_set_t
Parameter of Light LC Light OnOff state change event

Public Members

uint8_t **onoff**
The value of Light LC Light OnOff state

struct esp_ble_mesh_state_change_light_lc_property_set_t
Parameters of Light LC Property state change event

Public Members

uint16_t **property_id**
The property id of Light LC Property state

struct net_buf_simple ***property_value**
The property value of Light LC Property state

struct esp_ble_mesh_state_change_sensor_status_t
Parameters of Sensor Status state change event

Public Members

uint16_t **property_id**
The value of Sensor Property ID

uint8_t **occupancy**
The value of Light LC Occupancy state

uint32_t **set_occupancy_to_1_delay**
The value of Light LC Set Occupancy to 1 Delay state

uint32_t **ambient_luxlevel**
The value of Light LC Ambient Luxlevel state

union *esp_ble_mesh_state_change_sensor_status_t*::**[anonymous]** **state**
Parameters of Sensor Status related state

struct esp_ble_mesh_server_recv_light_lc_property_get_t
Context of the received Light LC Property Get message

Public Members

uint16_t **property_id**
Property ID identifying a Light LC Property

struct esp_ble_mesh_server_recv_light_lightness_set_t
Context of the received Light Lightness Set message

Public Members

bool **op_en**
Indicate if optional parameters are included

uint16_t **lightness**
Target value of light lightness actual state

uint8_t **tid**
Transaction ID

uint8_t **trans_time**
Time to complete state transition (optional)

uint8_t **delay**
Indicate message execution delay (C.1)

struct esp_ble_mesh_server_recv_light_lightness_linear_set_t
Context of the received Light Lightness Linear Set message

Public Members

bool **op_en**
Indicate if optional parameters are included

uint16_t **lightness**
Target value of light lightness linear state

uint8_t **tid**
Transaction ID

uint8_t **trans_time**
Time to complete state transition (optional)

uint8_t **delay**
Indicate message execution delay (C.1)

struct esp_ble_mesh_server_recv_light_lightness_default_set_t
Context of the received Light Lightness Default Set message

Public Members

uint16_t **lightness**
The value of the Light Lightness Default state

struct esp_ble_mesh_server_recv_light_lightness_range_set_t
Context of the received Light Lightness Range Set message

Public Members

uint16_t **range_min**
Value of range min field of light lightness range state

uint16_t **range_max**
Value of range max field of light lightness range state

struct esp_ble_mesh_server_recv_light_ctl_set_t
Context of the received Light CTL Set message

Public Members

bool **op_en**
Indicate if optional parameters are included

uint16_t **lightness**
Target value of light ctl lightness state

uint16_t **temperature**
Target value of light ctl temperature state

int16_t **delta_uv**
Target value of light ctl delta UV state

uint8_t **tid**
Transaction ID

uint8_t **trans_time**
Time to complete state transition (optional)

uint8_t **delay**
Indicate message execution delay (C.1)

struct esp_ble_mesh_server_recv_light_ctl_temperature_set_t
Context of the received Light CTL Temperature Set message

Public Members

bool **op_en**
Indicate if optional parameters are included

uint16_t **temperature**
Target value of light ctl temperature state

int16_t **delta_uv**
Target value of light ctl delta UV state

uint8_t **tid**
Transaction ID

uint8_t **trans_time**
Time to complete state transition (optional)

uint8_t **delay**
Indicate message execution delay (C.1)

struct esp_ble_mesh_server_recv_light_ctl_temperature_range_set_t
Context of the received Light CTL Temperature Range Set message

Public Members

uint16_t **range_min**
Value of temperature range min field of light ctl temperature range state

uint16_t **range_max**
Value of temperature range max field of light ctl temperature range state

struct esp_ble_mesh_server_recv_light_ctl_default_set_t
Context of the received Light CTL Default Set message

Public Members

uint16_t **lightness**
Value of light lightness default state

uint16_t **temperature**
Value of light temperature default state

int16_t **delta_uv**
Value of light delta UV default state

struct esp_ble_mesh_server_recv_light_hsl_set_t
Context of the received Light HSL Set message

Public Members

bool **op_en**
Indicate if optional parameters are included

uint16_t **lightness**
Target value of light hsl lightness state

uint16_t **hue**
Target value of light hsl hue state

uint16_t **saturation**
Target value of light hsl saturation state

uint8_t **tid**
Transaction ID

uint8_t **trans_time**
Time to complete state transition (optional)

uint8_t **delay**
Indicate message execution delay (C.1)

struct esp_ble_mesh_server_recv_light_hsl_hue_set_t
Context of the received Light HSL Hue Set message

Public Members

bool **op_en**
Indicate if optional parameters are included

uint16_t **hue**
Target value of light hsl hue state

uint8_t **tid**
Transaction ID

uint8_t **trans_time**
Time to complete state transition (optional)

uint8_t **delay**
Indicate message execution delay (C.1)

struct esp_ble_mesh_server_recv_light_hsl_saturation_set_t
Context of the received Light HSL Saturation Set message

Public Members

bool **op_en**
Indicate if optional parameters are included

uint16_t **saturation**
Target value of light hsl hue state

uint8_t **tid**
Transaction ID

uint8_t **trans_time**
Time to complete state transition (optional)

uint8_t **delay**
Indicate message execution delay (C.1)

struct esp_ble_mesh_server_recv_light_hsl_default_set_t
Context of the received Light HSL Default Set message

Public Members

uint16_t **lightness**
Value of light lightness default state

uint16_t **hue**
Value of light hue default state

uint16_t **saturation**
Value of light saturation default state

struct esp_ble_mesh_server_recv_light_hsl_range_set_t
Context of the received Light HSL Range Set message

Public Members

uint16_t **hue_range_min**
Value of hue range min field of light hsl hue range state

uint16_t **hue_range_max**
Value of hue range max field of light hsl hue range state

uint16_t **saturation_range_min**
Value of saturation range min field of light hsl saturation range state

uint16_t **saturation_range_max**
Value of saturation range max field of light hsl saturation range state

struct esp_ble_mesh_server_recv_light_xyl_set_t
Context of the received Light xyL Set message

Public Members

bool **op_en**
Indicate whether optional parameters included

uint16_t **lightness**
The target value of the Light xyL Lightness state

uint16_t **x**
The target value of the Light xyL x state

uint16_t **y**
The target value of the Light xyL y state

uint8_t **tid**
Transaction Identifier

uint8_t **trans_time**
Time to complete state transition (optional)

uint8_t **delay**
Indicate message execution delay (C.1)

struct esp_ble_mesh_server_recv_light_xyl_default_set_t
Context of the received Light xyL Default Set message

Public Members

uint16_t **lightness**
The value of the Light Lightness Default state

uint16_t **x**
The value of the Light xyL x Default state

uint16_t **y**
The value of the Light xyL y Default state

struct esp_ble_mesh_server_recv_light_xyl_range_set_t
Context of the received Light xyl Range Set message

Public Members

uint16_t **x_range_min**
The value of the xyL x Range Min field of the Light xyL x Range state

uint16_t **x_range_max**
The value of the xyL x Range Max field of the Light xyL x Range state

uint16_t **y_range_min**
The value of the xyL y Range Min field of the Light xyL y Range state

uint16_t **y_range_max**
The value of the xyL y Range Max field of the Light xyL y Range state

struct esp_ble_mesh_server_recv_light_lc_mode_set_t
Context of the received Light LC Mode Set message

Public Members

uint8_t **mode**
The target value of the Light LC Mode state

struct esp_ble_mesh_server_recv_light_lc_om_set_t
Context of the received Light OM Set message

Public Members

uint8_t **mode**
The target value of the Light LC Occupancy Mode state

struct esp_ble_mesh_server_recv_light_lc_light_onoff_set_t
Context of the received Light LC Light OnOff Set message

Public Members

bool **op_en**
Indicate whether optional parameters included

uint8_t **light_onoff**
The target value of the Light LC Light OnOff state

uint8_t **tid**
Transaction Identifier

uint8_t **trans_time**
Time to complete state transition (optional)

uint8_t **delay**
Indicate message execution delay (C.1)

struct esp_ble_mesh_server_recv_light_lc_property_set_t
Context of the received Light LC Property Set message

Public Members

uint16_t **property_id**
Property ID identifying a Light LC Property

struct net_buf_simple ***property_value**
Raw value for the Light LC Property

struct esp_ble_mesh_server_recv_sensor_status_t
Context of the received Sensor Status message

Public Members

struct net_buf_simple ***data**
Value of sensor data state (optional)

struct esp_ble_mesh_lighting_server_cb_param_t
Lighting Server Model callback parameters

Public Members

esp_ble_mesh_model_t ***model**
Pointer to Lighting Server Models

esp_ble_mesh_msg_ctx_t **ctx**
Context of the received messages

esp_ble_mesh_lighting_server_cb_value_t **value**
Value of the received Lighting Messages

Macros

ESP_BLE_MESH_MODEL_LIGHT_LIGHTNESS_CLI(cli_pub, cli_data)
Define a new Light Lightness Client Model.

Note This API needs to be called for each element on which the application needs to have a Light Lightness Client Model.
Return New Light Lightness Client Model instance.
Parameters
- `cli_pub`: Pointer to the unique struct *esp_ble_mesh_model_pub_t*.
- `cli_data`: Pointer to the unique struct *esp_ble_mesh_client_t*.

ESP_BLE_MESH_MODEL_LIGHT_CTL_CLI(cli_pub, cli_data)
Define a new Light CTL Client Model.

Note This API needs to be called for each element on which the application needs to have a Light CTL Client Model.
Return New Light CTL Client Model instance.
Parameters
- `cli_pub`: Pointer to the unique struct *esp_ble_mesh_model_pub_t*.
- `cli_data`: Pointer to the unique struct *esp_ble_mesh_client_t*.

ESP_BLE_MESH_MODEL_LIGHT_HSL_CLI(cli_pub, cli_data)
Define a new Light HSL Client Model.

Note This API needs to be called for each element on which the application needs to have a Light HSL Client Model.
Return New Light HSL Client Model instance.
Parameters
- `cli_pub`: Pointer to the unique struct *esp_ble_mesh_model_pub_t*.
- `cli_data`: Pointer to the unique struct *esp_ble_mesh_client_t*.

ESP_BLE_MESH_MODEL_LIGHT_XYL_CLI(cli_pub, cli_data)
Define a new Light xyL Client Model.

Note This API needs to be called for each element on which the application needs to have a Light xyL Client Model.
Return New Light xyL Client Model instance.
Parameters
- `cli_pub`: Pointer to the unique struct *esp_ble_mesh_model_pub_t*.
- `cli_data`: Pointer to the unique struct *esp_ble_mesh_client_t*.

ESP_BLE_MESH_MODEL_LIGHT_LC_CLI(cli_pub, cli_data)
Define a new Light LC Client Model.

Note This API needs to be called for each element on which the application needs to have a Light LC Client Model.
Return New Light LC Client Model instance.
Parameters
- `cli_pub`: Pointer to the unique struct *esp_ble_mesh_model_pub_t*.
- `cli_data`: Pointer to the unique struct *esp_ble_mesh_client_t*.

ESP_BLE_MESH_MODEL_LIGHT_LIGHTNESS_SRV(srv_pub, srv_data)
Lighting Server Models related context.

Define a new Light Lightness Server Model.

Note 1. The Light Lightness Server model extends the Generic Power OnOff Server model and the Generic Level Server model. When this model is present on an Element, the corresponding Light Lightness Setup Server model shall also be present.
1. This model shall support model publication and model subscription.

Return New Light Lightness Server Model instance.

Parameters
- `srv_pub`: Pointer to the unique struct *esp_ble_mesh_model_pub_t*.
- `srv_data`: Pointer to the unique struct *esp_ble_mesh_light_lightness_srv_t*.

ESP_BLE_MESH_MODEL_LIGHT_LIGHTNESS_SETUP_SRV(srv_pub, srv_data)

Define a new Light Lightness Setup Server Model.

Note 1. The Light Lightness Setup Server model extends the Light Lightness Server model and the Generic Power OnOff Setup Server model.
1. This model shall support model subscription.

Return New Light Lightness Setup Server Model instance.

Parameters
- `srv_pub`: Pointer to the unique struct *esp_ble_mesh_model_pub_t*.
- `srv_data`: Pointer to the unique struct *esp_ble_mesh_light_lightness_setup_srv_t*.

ESP_BLE_MESH_MODEL_LIGHT_CTL_SRV(srv_pub, srv_data)

Define a new Light CTL Server Model.

Note 1. The Light CTL Server model extends the Light Lightness Server model. When this model is present on an Element, the corresponding Light CTL Temperature Server model and the corresponding Light CTL Setup Server model shall also be present.
1. This model shall support model publication and model subscription.
2. The model requires two elements: the main element and the Temperature element. The Temperature element contains the corresponding Light CTL Temperature Server model and an instance of a Generic Level state bound to the Light CTL Temperature state on the Temperature element. The Light CTL Temperature state on the Temperature element is bound to the Light CTL state on the main element.

Return New Light CTL Server Model instance.

Parameters
- `srv_pub`: Pointer to the unique struct *esp_ble_mesh_model_pub_t*.
- `srv_data`: Pointer to the unique struct *esp_ble_mesh_light_ctl_srv_t*.

ESP_BLE_MESH_MODEL_LIGHT_CTL_SETUP_SRV(srv_pub, srv_data)

Define a new Light CTL Setup Server Model.

Note 1. The Light CTL Setup Server model extends the Light CTL Server and the Light Lightness Setup Server.
1. This model shall support model subscription.

Return New Light CTL Setup Server Model instance.

Parameters
- `srv_pub`: Pointer to the unique struct *esp_ble_mesh_model_pub_t*.
- `srv_data`: Pointer to the unique struct *esp_ble_mesh_light_ctl_setup_srv_t*.

ESP_BLE_MESH_MODEL_LIGHT_CTL_TEMP_SRV(srv_pub, srv_data)

Define a new Light CTL Temperature Server Model.

Note 1. The Light CTL Temperature Server model extends the Generic Level Server model.
1. This model shall support model publication and model subscription.

Return New Light CTL Temperature Server Model instance.

Parameters
- `srv_pub`: Pointer to the unique struct *esp_ble_mesh_model_pub_t*.
- `srv_data`: Pointer to the unique struct *esp_ble_mesh_light_ctl_temp_srv_t*.

ESP_BLE_MESH_MODEL_LIGHT_HSL_SRV(srv_pub, srv_data)

Define a new Light HSL Server Model.

Note 1. The Light HSL Server model extends the Light Lightness Server model. When this model is present on an Element, the corresponding Light HSL Hue Server model and the corresponding Light HSL Saturation Server model and the corresponding Light HSL Setup Server model shall also be present.
1. This model shall support model publication and model subscription.
2. The model requires three elements: the main element and the Hue element and the Saturation element. The Hue element contains the corresponding Light HSL Hue Server model and an instance of a Generic Level state bound to the Light HSL Hue state on the Hue element. The Saturation element contains the corresponding Light HSL Saturation Server model and an instance of a Generic Level state bound to the Light HSL Saturation state on the Saturation element. The Light HSL Hue state on the Hue element is bound to the Light HSL state on the main element and the Light HSL Saturation state on the Saturation element is bound to the Light HSL state on the main element.

Return New Light HSL Server Model instance.

Parameters
- `srv_pub`: Pointer to the unique struct *esp_ble_mesh_model_pub_t*.
- `srv_data`: Pointer to the unique struct *esp_ble_mesh_light_hsl_srv_t*.

ESP_BLE_MESH_MODEL_LIGHT_HSL_SETUP_SRV(srv_pub, srv_data)
Define a new Light HSL Setup Server Model.

Note 1. The Light HSL Setup Server model extends the Light HSL Server and the Light Lightness Setup Server.
1. This model shall support model subscription.

Return New Light HSL Setup Server Model instance.

Parameters
- `srv_pub`: Pointer to the unique struct *esp_ble_mesh_model_pub_t*.
- `srv_data`: Pointer to the unique struct *esp_ble_mesh_light_hsl_setup_srv_t*.

ESP_BLE_MESH_MODEL_LIGHT_HSL_HUE_SRV(srv_pub, srv_data)
Define a new Light HSL Hue Server Model.

Note 1. The Light HSL Hue Server model extends the Generic Level Server model. This model is associated with the Light HSL Server model.
1. This model shall support model publication and model subscription.

Return New Light HSL Hue Server Model instance.

Parameters
- `srv_pub`: Pointer to the unique struct *esp_ble_mesh_model_pub_t*.
- `srv_data`: Pointer to the unique struct *esp_ble_mesh_light_hsl_hue_srv_t*.

ESP_BLE_MESH_MODEL_LIGHT_HSL_SAT_SRV(srv_pub, srv_data)
Define a new Light HSL Saturation Server Model.

Note 1. The Light HSL Saturation Server model extends the Generic Level Server model. This model is associated with the Light HSL Server model.
1. This model shall support model publication and model subscription.

Return New Light HSL Saturation Server Model instance.

Parameters
- `srv_pub`: Pointer to the unique struct *esp_ble_mesh_model_pub_t*.
- `srv_data`: Pointer to the unique struct *esp_ble_mesh_light_hsl_sat_srv_t*.

ESP_BLE_MESH_MODEL_LIGHT_XYL_SRV(srv_pub, srv_data)
Define a new Light xyL Server Model.

Note 1. The Light xyL Server model extends the Light Lightness Server model. When this model is present on an Element, the corresponding Light xyL Setup Server model shall also be present.
1. This model shall support model publication and model subscription.

Return New Light xyL Server Model instance.

Parameters
- `srv_pub`: Pointer to the unique struct *esp_ble_mesh_model_pub_t*.
- `srv_data`: Pointer to the unique struct *esp_ble_mesh_light_xyl_srv_t*.

ESP_BLE_MESH_MODEL_LIGHT_XYL_SETUP_SRV(srv_pub, srv_data)
Define a new Light xyL Setup Server Model.

Note 1. The Light xyL Setup Server model extends the Light xyL Server and the Light Lightness Setup Server.
1. This model shall support model subscription.

Return New Light xyL Setup Server Model instance.

Parameters
- `srv_pub`: Pointer to the unique struct *esp_ble_mesh_model_pub_t*.
- `srv_data`: Pointer to the unique struct *esp_ble_mesh_light_xyl_setup_srv_t*.

ESP_BLE_MESH_MODEL_LIGHT_LC_SRV(srv_pub, srv_data)

Define a new Light LC Server Model.

Note 1. The Light LC (Lightness Control) Server model extends the Light Lightness Server model and the Generic OnOff Server model. When this model is present on an Element, the corresponding Light LC Setup Server model shall also be present.
1. This model shall support model publication and model subscription.
2. This model may be used to represent an element that is a client to a Sensor Server model and controls the Light Lightness Actual state via defined state bindings.

Return New Light LC Server Model instance.

Parameters
- `srv_pub`: Pointer to the unique struct *esp_ble_mesh_model_pub_t*.
- `srv_data`: Pointer to the unique struct *esp_ble_mesh_light_lc_srv_t*.

ESP_BLE_MESH_MODEL_LIGHT_LC_SETUP_SRV(srv_pub, srv_data)

Define a new Light LC Setup Server Model.

Note 1. The Light LC (Lightness Control) Setup model extends the Light LC Server model.
1. This model shall support model publication and model subscription.
2. This model may be used to configure setup parameters for the Light LC Server model.

Return New Light LC Setup Server Model instance.

Parameters
- `srv_pub`: Pointer to the unique struct *esp_ble_mesh_model_pub_t*.
- `srv_data`: Pointer to the unique struct *esp_ble_mesh_light_lc_setup_srv_t*.

Type Definitions

typedef void (***esp_ble_mesh_light_client_cb_t**)(*esp_ble_mesh_light_client_cb_event_t* event, *esp_ble_mesh_light_client_cb_param_t* *param)

Bluetooth Mesh Light Client Model function.

Lighting Client Model callback function type

Parameters
- `event`: Event type
- `param`: Pointer to callback parameter

typedef void (***esp_ble_mesh_lighting_server_cb_t**)(*esp_ble_mesh_lighting_server_cb_event_t* event, *esp_ble_mesh_lighting_server_cb_param_t* *param)

Bluetooth Mesh Lighting Server Model function.

Lighting Server Model callback function type

Parameters
- `event`: Event type
- `param`: Pointer to callback parameter

Enumerations

enum esp_ble_mesh_light_client_cb_event_t

This enum value is the event of Lighting Client Model

Values:

ESP_BLE_MESH_LIGHT_CLIENT_GET_STATE_EVT

ESP_BLE_MESH_LIGHT_CLIENT_SET_STATE_EVT

ESP_BLE_MESH_LIGHT_CLIENT_PUBLISH_EVT

ESP_BLE_MESH_LIGHT_CLIENT_TIMEOUT_EVT

ESP_BLE_MESH_LIGHT_CLIENT_EVT_MAX

enum esp_ble_mesh_lc_state_t

This enum value is the Light LC State Machine states

Values:

ESP_BLE_MESH_LC_OFF

ESP_BLE_MESH_LC_STANDBY

ESP_BLE_MESH_LC_FADE_ON

ESP_BLE_MESH_LC_RUN

ESP_BLE_MESH_LC_FADE

ESP_BLE_MESH_LC_PROLONG

ESP_BLE_MESH_LC_FADE_STANDBY_AUTO

ESP_BLE_MESH_LC_FADE_STANDBY_MANUAL

enum esp_ble_mesh_lighting_server_cb_event_t

This enum value is the event of Lighting Server Model

Values:

ESP_BLE_MESH_LIGHTING_SERVER_STATE_CHANGE_EVT

1. When get_auto_rsp is set to ESP_BLE_MESH_SERVER_AUTO_RSP, no event will be callback to the application layer when Lighting Get messages are received.
2. When set_auto_rsp is set to ESP_BLE_MESH_SERVER_AUTO_RSP, this event will be callback to the application layer when Lighting Set/Set Unack messages are received.

ESP_BLE_MESH_LIGHTING_SERVER_RECV_GET_MSG_EVT

When get_auto_rsp is set to ESP_BLE_MESH_SERVER_RSP_BY_APP, this event will be callback to the application layer when Lighting Get messages are received.

ESP_BLE_MESH_LIGHTING_SERVER_RECV_SET_MSG_EVT

When set_auto_rsp is set to ESP_BLE_MESH_SERVER_RSP_BY_APP, this event will be callback to the application layer when Lighting Set/Set Unack messages are received.

ESP_BLE_MESH_LIGHTING_SERVER_RECV_STATUS_MSG_EVT

When status_auto_rsp is set to ESP_BLE_MESH_SERVER_RSP_BY_APP, this event will be callback to the application layer when Sensor Status message is received.

ESP_BLE_MESH_LIGHTING_SERVER_EVT_MAX

请点击下方链接，查看 ESP32 蓝牙架构：

ESP32 蓝牙架构 (PDF)

蓝牙 API 的示例代码存放于 ESP-IDF bluetooth/bluedroid 示例目录下，请查看。

下面的示例给出了详细介绍：

- GATT 客户端示例
- GATT 服务端服务表格示例
- GATT 服务端示例
- GATT 客户端安全性示例
- GATT 服务端安全性示例
- GATT 客户端多连接示例

2.2 连网 API

2.2.1 Wi-Fi

Wi-Fi 库

概述 Wi-Fi 库支持配置及监控 ESP32 Wi-Fi 连网功能。

支持配置：

- 基站模式（即 STA 模式或 Wi-Fi 客户端模式），此时 ESP32 连接到接入点 (AP)。
- AP 模式（即 Soft-AP 模式或接入点模式），此时基站连接到 ESP32。
- AP-STA 共存模式（ESP32 既是接入点，同时又作为基站连接到另外一个接入点）。
- 上述模式的各种安全模式（WPA、WPA2、WPA3 等）。
- 扫描接入点（包括主动扫描及被动扫描）。
- 使用混杂模式监控 IEEE802.11 Wi-Fi 数据包。

应用示例 ESP-IDF 示例项目的 wifi 目录下包含以下应用程序：

- Wi-Fi 示例代码；
- 另外一个简单的应用程序 esp-idf-template，演示了如何将 ESP32 模组连接到 AP。

API 参考

Header File

- esp_wifi/include/esp_wifi.h

Functions

esp_err_t **esp_wifi_init**(**const** *wifi_init_config_t* **config*)

Initialize WiFi Allocate resource for WiFi driver, such as WiFi control structure, RX/TX buffer, WiFi NVS structure etc. This WiFi also starts WiFi task.

Attention 1. This API must be called before all other WiFi API can be called

Attention 2. Always use WIFI_INIT_CONFIG_DEFAULT macro to initialize the configuration to default values, this can guarantee all the fields get correct value when more fields are added into *wifi_init_config_t* in future release. If you want to set your own initial values, overwrite the default values which are set by WIFI_INIT_CONFIG_DEFAULT. Please be notified that the field 'magic' of *wifi_init_config_t* should always be WIFI_INIT_CONFIG_MAGIC!

Return

- ESP_OK: succeed
- ESP_ERR_NO_MEM: out of memory
- others: refer to error code esp_err.h

Parameters

- `config`: pointer to WiFi initialized configuration structure; can point to a temporary variable.

esp_err_t **esp_wifi_deinit**(void)

Deinit WiFi Free all resource allocated in esp_wifi_init and stop WiFi task.

Attention 1. This API should be called if you want to remove WiFi driver from the system

Return

- ESP_OK: succeed
- ESP_ERR_WIFI_NOT_INIT: WiFi is not initialized by esp_wifi_init

esp_err_t **esp_wifi_set_mode**(*wifi_mode_t mode*)

Set the WiFi operating mode.

Set the WiFi operating mode as station, soft-AP or station+soft-AP, The default mode is soft-AP mode.

Return

- ESP_OK: succeed
- ESP_ERR_WIFI_NOT_INIT: WiFi is not initialized by esp_wifi_init
- ESP_ERR_INVALID_ARG: invalid argument
- others: refer to error code in esp_err.h

Parameters

- `mode`: WiFi operating mode

esp_err_t **esp_wifi_get_mode**(*wifi_mode_t* **mode*)

Get current operating mode of WiFi.

Return

- ESP_OK: succeed
- ESP_ERR_WIFI_NOT_INIT: WiFi is not initialized by esp_wifi_init
- ESP_ERR_INVALID_ARG: invalid argument

Parameters

- `[out] mode`: store current WiFi mode

esp_err_t **esp_wifi_start**(void)

Start WiFi according to current configuration If mode is WIFI_MODE_STA, it create station control block and start station If mode is WIFI_MODE_AP, it create soft-AP control block and start soft-AP If mode is WIFI_MODE_APSTA, it create soft-AP and station control block and start soft-AP and station.

Return

- ESP_OK: succeed
- ESP_ERR_WIFI_NOT_INIT: WiFi is not initialized by esp_wifi_init
- ESP_ERR_INVALID_ARG: invalid argument
- ESP_ERR_NO_MEM: out of memory
- ESP_ERR_WIFI_CONN: WiFi internal error, station or soft-AP control block wrong
- ESP_FAIL: other WiFi internal errors

esp_err_t **esp_wifi_stop**(void)

Stop WiFi If mode is WIFI_MODE_STA, it stop station and free station control block If mode is WIFI_MODE_AP, it stop soft-AP and free soft-AP control block If mode is WIFI_MODE_APSTA, it stop station/soft-AP and free station/soft-AP control block.

Return

- ESP_OK: succeed
- ESP_ERR_WIFI_NOT_INIT: WiFi is not initialized by esp_wifi_init

esp_err_t **esp_wifi_restore**(void)

Restore WiFi stack persistent settings to default values.

This function will reset settings made using the following APIs:

- esp_wifi_set_bandwidth,
- esp_wifi_set_protocol,
- esp_wifi_set_config related
- esp_wifi_set_mode

Return

- ESP_OK: succeed
- ESP_ERR_WIFI_NOT_INIT: WiFi is not initialized by esp_wifi_init

esp_err_t **esp_wifi_connect**(void)

Connect the ESP32 WiFi station to the AP.

Attention 1. This API only impact WIFI_MODE_STA or WIFI_MODE_APSTA mode

Attention 2. If the ESP32 is connected to an AP, call esp_wifi_disconnect to disconnect.

Attention 3. The scanning triggered by esp_wifi_scan_start() will not be effective until connection between ESP32 and the AP is established. If ESP32 is scanning and connecting at the same time, ESP32 will abort scanning and return a warning message and error number ESP_ERR_WIFI_STATE. If you want to do reconnection after ESP32 received disconnect event, remember to add the maximum retry time, otherwise the called scan will not work. This is especially true when the AP doesn't exist, and you still try reconnection after ESP32 received disconnect event with the reason code WIFI_REASON_NO_AP_FOUND.

Return

- ESP_OK: succeed
- ESP_ERR_WIFI_NOT_INIT: WiFi is not initialized by esp_wifi_init
- ESP_ERR_WIFI_NOT_STARTED: WiFi is not started by esp_wifi_start
- ESP_ERR_WIFI_CONN: WiFi internal error, station or soft-AP control block wrong
- ESP_ERR_WIFI_SSID: SSID of AP which station connects is invalid

esp_err_t **esp_wifi_disconnect**(void)

Disconnect the ESP32 WiFi station from the AP.

Return

- ESP_OK: succeed
- ESP_ERR_WIFI_NOT_INIT: WiFi was not initialized by esp_wifi_init
- ESP_ERR_WIFI_NOT_STARTED: WiFi was not started by esp_wifi_start
- ESP_FAIL: other WiFi internal errors

esp_err_t **esp_wifi_clear_fast_connect**(void)

Currently this API is just an stub API.

Return

- ESP_OK: succeed
- others: fail

esp_err_t **esp_wifi_deauth_sta**(uint16_t *aid*)

deauthenticate all stations or associated id equals to aid

Return

- ESP_OK: succeed
- ESP_ERR_WIFI_NOT_INIT: WiFi is not initialized by esp_wifi_init
- ESP_ERR_WIFI_NOT_STARTED: WiFi was not started by esp_wifi_start
- ESP_ERR_INVALID_ARG: invalid argument
- ESP_ERR_WIFI_MODE: WiFi mode is wrong

Parameters

- `aid`: when aid is 0, deauthenticate all stations, otherwise deauthenticate station whose associated id is aid

esp_err_t **esp_wifi_scan_start**(**const** *wifi_scan_config_t* **config*, bool *block*)

Scan all available APs.

Attention If this API is called, the found APs are stored in WiFi driver dynamic allocated memory and the will be freed in esp_wifi_scan_get_ap_records, so generally, call esp_wifi_scan_get_ap_records to cause the memory to be freed once the scan is done

Attention The values of maximum active scan time and passive scan time per channel are limited to 1500 milliseconds. Values above 1500ms may cause station to disconnect from AP and are not recommended.

Return

- ESP_OK: succeed
- ESP_ERR_WIFI_NOT_INIT: WiFi is not initialized by esp_wifi_init
- ESP_ERR_WIFI_NOT_STARTED: WiFi was not started by esp_wifi_start
- ESP_ERR_WIFI_TIMEOUT: blocking scan is timeout
- ESP_ERR_WIFI_STATE: wifi still connecting when invoke esp_wifi_scan_start
- others: refer to error code in esp_err.h

Parameters

- `config`: configuration of scanning
- `block`: if block is true, this API will block the caller until the scan is done, otherwise it will return immediately

esp_err_t **esp_wifi_scan_stop**(void)

Stop the scan in process.

Return

- ESP_OK: succeed
- ESP_ERR_WIFI_NOT_INIT: WiFi is not initialized by esp_wifi_init
- ESP_ERR_WIFI_NOT_STARTED: WiFi is not started by esp_wifi_start

esp_err_t **esp_wifi_scan_get_ap_num**(uint16_t *number)

Get number of APs found in last scan.

Attention This API can only be called when the scan is completed, otherwise it may get wrong value.

Return

- ESP_OK: succeed
- ESP_ERR_WIFI_NOT_INIT: WiFi is not initialized by esp_wifi_init
- ESP_ERR_WIFI_NOT_STARTED: WiFi is not started by esp_wifi_start
- ESP_ERR_INVALID_ARG: invalid argument

Parameters

- `[out] number`: store number of APIs found in last scan

esp_err_t **esp_wifi_scan_get_ap_records**(uint16_t *number, *wifi_ap_record_t* *ap_records)

Get AP list found in last scan.

Return

- ESP_OK: succeed
- ESP_ERR_WIFI_NOT_INIT: WiFi is not initialized by esp_wifi_init
- ESP_ERR_WIFI_NOT_STARTED: WiFi is not started by esp_wifi_start
- ESP_ERR_INVALID_ARG: invalid argument
- ESP_ERR_NO_MEM: out of memory

Parameters

- `[inout] number`: As input param, it stores max AP number ap_records can hold. As output param, it receives the actual AP number this API returns.
- `ap_records`: *wifi_ap_record_t* array to hold the found APs

esp_err_t **esp_wifi_clear_ap_list**(void)

Clear AP list found in last scan.

Attention When the obtained ap list fails,bss info must be cleared,otherwise it may cause memory leakage.

Return

- ESP_OK: succeed
- ESP_ERR_WIFI_NOT_INIT: WiFi is not initialized by esp_wifi_init
- ESP_ERR_WIFI_NOT_STARTED: WiFi is not started by esp_wifi_start
- ESP_ERR_WIFI_MODE: WiFi mode is wrong
- ESP_ERR_INVALID_ARG: invalid argument

esp_err_t **esp_wifi_sta_get_ap_info**(*wifi_ap_record_t* *ap_info)

Get information of AP which the ESP32 station is associated with.

Attention When the obtained country information is empty, it means that the AP does not carry country information

Return

- ESP_OK: succeed
- ESP_ERR_WIFI_CONN: The station interface don't initialized
- ESP_ERR_WIFI_NOT_CONNECT: The station is in disconnect status

Parameters

- `ap_info`: the *wifi_ap_record_t* to hold AP information sta can get the connected ap's phy mode info through the struct member phy_11b, phy_11g, phy_11n, phy_lr in the *wifi_ap_record_t* struct. For example, phy_11b = 1 imply that ap support 802.11b mode

esp_err_t **esp_wifi_set_ps**(*wifi_ps_type_t type*)

Set current WiFi power save type.

Attention Default power save type is WIFI_PS_MIN_MODEM.

Return ESP_OK: succeed

Parameters

- `type`: power save type

esp_err_t **esp_wifi_get_ps**(*wifi_ps_type_t* *type)

Get current WiFi power save type.

Attention Default power save type is WIFI_PS_MIN_MODEM.

Return ESP_OK: succeed

Parameters

- `[out] type`: store current power save type

esp_err_t **esp_wifi_set_protocol** (*wifi_interface_t ifx*, uint8_t *protocol_bitmap*)

Set protocol type of specified interface The default protocol is (WIFI_PROTOCOL_11B|WIFI_PROTOCOL_11G|WIFI_PROT

Attention Support 802.11b or 802.11bg or 802.11bgn or LR mode

Return

- ESP_OK: succeed
- ESP_ERR_WIFI_NOT_INIT: WiFi is not initialized by esp_wifi_init
- ESP_ERR_WIFI_IF: invalid interface
- others: refer to error codes in esp_err.h

Parameters

- `ifx`: interfaces
- `protocol_bitmap`: WiFi protocol bitmap

esp_err_t **esp_wifi_get_protocol** (*wifi_interface_t ifx*, uint8_t **protocol_bitmap*)

Get the current protocol bitmap of the specified interface.

Return

- ESP_OK: succeed
- ESP_ERR_WIFI_NOT_INIT: WiFi is not initialized by esp_wifi_init
- ESP_ERR_WIFI_IF: invalid interface
- ESP_ERR_INVALID_ARG: invalid argument
- others: refer to error codes in esp_err.h

Parameters

- `ifx`: interface
- `[out] protocol_bitmap`: store current WiFi protocol bitmap of interface ifx

esp_err_t **esp_wifi_set_bandwidth** (*wifi_interface_t ifx*, *wifi_bandwidth_t bw*)

Set the bandwidth of ESP32 specified interface.

Attention 1. API return false if try to configure an interface that is not enabled

Attention 2. WIFI_BW_HT40 is supported only when the interface support 11N

Return

- ESP_OK: succeed
- ESP_ERR_WIFI_NOT_INIT: WiFi is not initialized by esp_wifi_init
- ESP_ERR_WIFI_IF: invalid interface
- ESP_ERR_INVALID_ARG: invalid argument
- others: refer to error codes in esp_err.h

Parameters

- `ifx`: interface to be configured
- `bw`: bandwidth

esp_err_t **esp_wifi_get_bandwidth** (*wifi_interface_t ifx*, *wifi_bandwidth_t *bw*)

Get the bandwidth of ESP32 specified interface.

Attention 1. API return false if try to get a interface that is not enable

Return

- ESP_OK: succeed
- ESP_ERR_WIFI_NOT_INIT: WiFi is not initialized by esp_wifi_init
- ESP_ERR_WIFI_IF: invalid interface
- ESP_ERR_INVALID_ARG: invalid argument

Parameters

- `ifx`: interface to be configured
- `[out] bw`: store bandwidth of interface ifx

esp_err_t **esp_wifi_set_channel** (uint8_t *primary*, *wifi_second_chan_t second*)

Set primary/secondary channel of ESP32.

Attention 1. This API should be called after esp_wifi_start() and before esp_wifi_stop()

Attention 2. When ESP32 is in STA mode, this API should not be called when STA is scanning or connecting to an external AP

Attention 3. When ESP32 is in softAP mode, this API should not be called when softAP has connected to external STAs

Attention 4. When ESP32 is in STA+softAP mode, this API should not be called when in the scenarios described above

Attention 5. The channel info set by this API will not be stored in NVS. So If you want to remeber the channel used before wifi stop, you need to call this API again after wifi start, or you can call `esp_wifi_set_config()` to store the channel info in NVS.

Return

- ESP_OK: succeed
- ESP_ERR_WIFI_NOT_INIT: WiFi is not initialized by esp_wifi_init
- ESP_ERR_WIFI_IF: invalid interface
- ESP_ERR_INVALID_ARG: invalid argument
- ESP_ERR_WIFI_NOT_STARTED: WiFi is not started by esp_wifi_start

Parameters

- `primary`: for HT20, primary is the channel number, for HT40, primary is the primary channel
- `second`: for HT20, second is ignored, for HT40, second is the second channel

esp_err_t **esp_wifi_get_channel**(uint8_t **primary*, *wifi_second_chan_t* **second*)

Get the primary/secondary channel of ESP32.

Attention 1. API return false if try to get a interface that is not enable

Return

- ESP_OK: succeed
- ESP_ERR_WIFI_NOT_INIT: WiFi is not initialized by esp_wifi_init
- ESP_ERR_INVALID_ARG: invalid argument

Parameters

- `primary`: store current primary channel
- `[out] second`: store current second channel

esp_err_t **esp_wifi_set_country**(**const** *wifi_country_t* **country*)

configure country info

Attention 1. It is discouraged to call this API since this doesn't validate the per-country rules, it's up to the user to fill in all fields according to local regulations. Please use esp_wifi_set_country_code instead.

Attention 2. The default country is CHINA {.cc="CN", .schan=1, .nchan=13, .policy=WIFI_COUNTRY_POLICY_AUTO}.

Attention 3. The third octet of country code string is one of the following: ' ', 'O', 'I', 'X', otherwise it is considered as ' '.

Attention 4. When the country policy is WIFI_COUNTRY_POLICY_AUTO, the country info of the AP to which the station is connected is used. E.g. if the configured country info is {.cc="US", .schan=1, .nchan=11} and the country info of the AP to which the station is connected is {.cc="JP", .schan=1, .nchan=14} then the country info that will be used is {.cc="JP", .schan=1, .nchan=14}. If the station disconnected from the AP the country info is set back to the country info of the station automatically, {.cc="US", .schan=1, .nchan=11} in the example.

Attention 5. When the country policy is WIFI_COUNTRY_POLICY_MANUAL, then the configured country info is used always.

Attention 6. When the country info is changed because of configuration or because the station connects to a different external AP, the country IE in probe response/beacon of the soft-AP is also changed.

Attention 7. The country configuration is stored into flash.

Attention 8. When this API is called, the PHY init data will switch to the PHY init data type corresponding to the country info.

Return

- ESP_OK: succeed
- ESP_ERR_WIFI_NOT_INIT: WiFi is not initialized by esp_wifi_init
- ESP_ERR_INVALID_ARG: invalid argument

Parameters

- `country`: the configured country info

esp_err_t **esp_wifi_get_country**(*wifi_country_t* **country*)

get the current country info

Return

- ESP_OK: succeed
- ESP_ERR_WIFI_NOT_INIT: WiFi is not initialized by esp_wifi_init
- ESP_ERR_INVALID_ARG: invalid argument

Parameters

- `country`: country info

esp_err_t **esp_wifi_set_mac**(*wifi_interface_t ifx*, **const** uint8_t *mac*[6])

Set MAC address of the ESP32 WiFi station or the soft-AP interface.

Attention 1. This API can only be called when the interface is disabled

Attention 2. ESP32 soft-AP and station have different MAC addresses, do not set them to be the same.

Attention 3. The bit 0 of the first byte of ESP32 MAC address can not be 1. For example, the MAC address can set to be "1a:XX:XX:XX:XX:XX", but can not be "15:XX:XX:XX:XX:XX".

Return

- ESP_OK: succeed
- ESP_ERR_WIFI_NOT_INIT: WiFi is not initialized by esp_wifi_init
- ESP_ERR_INVALID_ARG: invalid argument
- ESP_ERR_WIFI_IF: invalid interface
- ESP_ERR_WIFI_MAC: invalid mac address
- ESP_ERR_WIFI_MODE: WiFi mode is wrong
- others: refer to error codes in esp_err.h

Parameters

- `ifx`: interface
- `mac`: the MAC address

esp_err_t **esp_wifi_get_mac**(*wifi_interface_t ifx*, uint8_t *mac*[6])

Get mac of specified interface.

Return

- ESP_OK: succeed
- ESP_ERR_WIFI_NOT_INIT: WiFi is not initialized by esp_wifi_init
- ESP_ERR_INVALID_ARG: invalid argument
- ESP_ERR_WIFI_IF: invalid interface

Parameters

- `ifx`: interface
- `[out] mac`: store mac of the interface ifx

esp_err_t **esp_wifi_set_promiscuous_rx_cb**(*wifi_promiscuous_cb_t cb*)

Register the RX callback function in the promiscuous mode.

Each time a packet is received, the registered callback function will be called.

Return

- ESP_OK: succeed
- ESP_ERR_WIFI_NOT_INIT: WiFi is not initialized by esp_wifi_init

Parameters

- `cb`: callback

esp_err_t **esp_wifi_set_promiscuous**(bool *en*)

Enable the promiscuous mode.

Return

- ESP_OK: succeed
- ESP_ERR_WIFI_NOT_INIT: WiFi is not initialized by esp_wifi_init

Parameters

- `en`: false - disable, true - enable

esp_err_t **esp_wifi_get_promiscuous**(bool **en*)

Get the promiscuous mode.

Return

- ESP_OK: succeed
- ESP_ERR_WIFI_NOT_INIT: WiFi is not initialized by esp_wifi_init

- ESP_ERR_INVALID_ARG: invalid argument

Parameters

- `[out] en`: store the current status of promiscuous mode

esp_err_t **esp_wifi_set_promiscuous_filter**(**const** *wifi_promiscuous_filter_t *filter*)

Enable the promiscuous mode packet type filter.

Note The default filter is to filter all packets except WIFI_PKT_MISC

Return

- ESP_OK: succeed
- ESP_ERR_WIFI_NOT_INIT: WiFi is not initialized by esp_wifi_init

Parameters

- `filter`: the packet type filtered in promiscuous mode.

esp_err_t **esp_wifi_get_promiscuous_filter**(*wifi_promiscuous_filter_t *filter*)

Get the promiscuous filter.

Return

- ESP_OK: succeed
- ESP_ERR_WIFI_NOT_INIT: WiFi is not initialized by esp_wifi_init
- ESP_ERR_INVALID_ARG: invalid argument

Parameters

- `[out] filter`: store the current status of promiscuous filter

esp_err_t **esp_wifi_set_promiscuous_ctrl_filter**(**const** *wifi_promiscuous_filter_t *filter*)

Enable subtype filter of the control packet in promiscuous mode.

Note The default filter is to filter none control packet.

Return

- ESP_OK: succeed
- ESP_ERR_WIFI_NOT_INIT: WiFi is not initialized by esp_wifi_init

Parameters

- `filter`: the subtype of the control packet filtered in promiscuous mode.

esp_err_t **esp_wifi_get_promiscuous_ctrl_filter**(*wifi_promiscuous_filter_t *filter*)

Get the subtype filter of the control packet in promiscuous mode.

Return

- ESP_OK: succeed
- ESP_ERR_WIFI_NOT_INIT: WiFi is not initialized by esp_wifi_init
- ESP_ERR_WIFI_ARG: invalid argument

Parameters

- `[out] filter`: store the current status of subtype filter of the control packet in promiscuous mode

esp_err_t **esp_wifi_set_config**(*wifi_interface_t interface*, *wifi_config_t *conf*)

Set the configuration of the ESP32 STA or AP.

Attention 1. This API can be called only when specified interface is enabled, otherwise, API fail

Attention 2. For station configuration, bssid_set needs to be 0; and it needs to be 1 only when users need to check the MAC address of the AP.

Attention 3. ESP32 is limited to only one channel, so when in the soft-AP+station mode, the soft-AP will adjust its channel automatically to be the same as the channel of the ESP32 station.

Attention 4. The configuration will be stored in NVS

Return

- ESP_OK: succeed
- ESP_ERR_WIFI_NOT_INIT: WiFi is not initialized by esp_wifi_init
- ESP_ERR_INVALID_ARG: invalid argument
- ESP_ERR_WIFI_IF: invalid interface
- ESP_ERR_WIFI_MODE: invalid mode
- ESP_ERR_WIFI_PASSWORD: invalid password
- ESP_ERR_WIFI_NVS: WiFi internal NVS error
- others: refer to the erro code in esp_err.h

Parameters

- `interface`: interface
- `conf`: station or soft-AP configuration

esp_err_t **esp_wifi_get_config**(*wifi_interface_t interface*, *wifi_config_t* **conf*)

Get configuration of specified interface.

Return

- ESP_OK: succeed
- ESP_ERR_WIFI_NOT_INIT: WiFi is not initialized by esp_wifi_init
- ESP_ERR_INVALID_ARG: invalid argument
- ESP_ERR_WIFI_IF: invalid interface

Parameters

- `interface`: interface
- `[out] conf`: station or soft-AP configuration

esp_err_t **esp_wifi_ap_get_sta_list**(*wifi_sta_list_t* **sta*)

Get STAs associated with soft-AP.

Attention SSC only API

Return

- ESP_OK: succeed
- ESP_ERR_WIFI_NOT_INIT: WiFi is not initialized by esp_wifi_init
- ESP_ERR_INVALID_ARG: invalid argument
- ESP_ERR_WIFI_MODE: WiFi mode is wrong
- ESP_ERR_WIFI_CONN: WiFi internal error, the station/soft-AP control block is invalid

Parameters

- `[out] sta`: station list ap can get the connected sta's phy mode info through the struct member phy_11b, phy_11g, phy_11n, phy_lr in the *wifi_sta_info_t* struct. For example, phy_11b = 1 imply that sta support 802.11b mode

esp_err_t **esp_wifi_ap_get_sta_aid**(**const** uint8_t *mac*[6], uint16_t **aid*)

Get AID of STA connected with soft-AP.

Return

- ESP_OK: succeed
- ESP_ERR_WIFI_NOT_INIT: WiFi is not initialized by esp_wifi_init
- ESP_ERR_INVALID_ARG: invalid argument
- ESP_ERR_NOT_FOUND: Requested resource not found
- ESP_ERR_WIFI_MODE: WiFi mode is wrong
- ESP_ERR_WIFI_CONN: WiFi internal error, the station/soft-AP control block is invalid

Parameters

- `mac`: STA's mac address
- `[out] aid`: Store the AID corresponding to STA mac

esp_err_t **esp_wifi_set_storage**(*wifi_storage_t storage*)

Set the WiFi API configuration storage type.

Attention 1. The default value is WIFI_STORAGE_FLASH

Return

- ESP_OK: succeed
- ESP_ERR_WIFI_NOT_INIT: WiFi is not initialized by esp_wifi_init
- ESP_ERR_INVALID_ARG: invalid argument

Parameters

- `storage`: : storage type

esp_err_t **esp_wifi_set_vendor_ie**(bool *enable*, *wifi_vendor_ie_type_t type*, *wifi_vendor_ie_id_t idx*, **const** void **vnd_ie*)

Set 802.11 Vendor-Specific Information Element.

Return

- ESP_OK: succeed
- ESP_ERR_WIFI_NOT_INIT: WiFi is not initialized by esp_wifi_init()

- ESP_ERR_INVALID_ARG: Invalid argument, including if first byte of vnd_ie is not WIFI_VENDOR_IE_ELEMENT_ID (0xDD) or second byte is an invalid length.
- ESP_ERR_NO_MEM: Out of memory

Parameters

- `enable`: If true, specified IE is enabled. If false, specified IE is removed.
- `type`: Information Element type. Determines the frame type to associate with the IE.
- `idx`: Index to set or clear. Each IE type can be associated with up to two elements (indices 0 & 1).
- `vnd_ie`: Pointer to vendor specific element data. First 6 bytes should be a header with fields matching *vendor_ie_data_t*. If enable is false, this argument is ignored and can be NULL. Data does not need to remain valid after the function returns.

esp_err_t **esp_wifi_set_vendor_ie_cb** (*esp_vendor_ie_cb_t cb*, void **ctx*)

Register Vendor-Specific Information Element monitoring callback.

Return

- ESP_OK: succeed
- ESP_ERR_WIFI_NOT_INIT: WiFi is not initialized by esp_wifi_init

Parameters

- `cb`: Callback function
- `ctx`: Context argument, passed to callback function.

esp_err_t **esp_wifi_set_max_tx_power** (int8_t *power*)

Set maximum transmitting power after WiFi start.

Attention 1. Maximum power before wifi startup is limited by PHY init data bin.

Attention 2. The value set by this API will be mapped to the max_tx_power of the structure *wifi_country_t* variable.

Attention 3. Mapping Table {Power, max_tx_power} = {{8, 2}, {20, 5}, {28, 7}, {34, 8}, {44, 11}, {52, 13}, {56, 14}, {60, 15}, {66, 16}, {72, 18}, {80, 20}}.

Attention 4. Param power unit is 0.25dBm, range is [8, 84] corresponding to 2dBm - 20dBm.

Attention 5. Relationship between set value and actual value. As follows: {set value range, actual value} = {{[8, 19],8}, {[20, 27],20}, {[28, 33],28}, {[34, 43],34}, {[44, 51],44}, {[52, 55],52}, {[56, 59],56}, {[60, 65],60}, {[66, 71],66}, {[72, 79],72}, {[80, 84],80}}.

Return

- ESP_OK: succeed
- ESP_ERR_WIFI_NOT_INIT: WiFi is not initialized by esp_wifi_init
- ESP_ERR_WIFI_NOT_STARTED: WiFi is not started by esp_wifi_start
- ESP_ERR_WIFI_ARG: invalid argument, e.g. parameter is out of range

Parameters

- `power`: Maximum WiFi transmitting power.

esp_err_t **esp_wifi_get_max_tx_power** (int8_t **power*)

Get maximum transmiting power after WiFi start.

Return

- ESP_OK: succeed
- ESP_ERR_WIFI_NOT_INIT: WiFi is not initialized by esp_wifi_init
- ESP_ERR_WIFI_NOT_STARTED: WiFi is not started by esp_wifi_start
- ESP_ERR_WIFI_ARG: invalid argument

Parameters

- `power`: Maximum WiFi transmitting power, unit is 0.25dBm.

esp_err_t **esp_wifi_set_event_mask** (uint32_t *mask*)

Set mask to enable or disable some WiFi events.

Attention 1. Mask can be created by logical OR of various WIFI_EVENT_MASK_ constants. Events which have corresponding bit set in the mask will not be delivered to the system event handler.

Attention 2. Default WiFi event mask is WIFI_EVENT_MASK_AP_PROBEREQRECVED.

Attention 3. There may be lots of stations sending probe request data around. Don't unmask this event unless you need to receive probe request data.

Return

- ESP_OK: succeed

- ESP_ERR_WIFI_NOT_INIT: WiFi is not initialized by esp_wifi_init

Parameters

- `mask`: WiFi event mask.

esp_err_t **esp_wifi_get_event_mask**(uint32_t **mask*)

Get mask of WiFi events.

Return

- ESP_OK: succeed
- ESP_ERR_WIFI_NOT_INIT: WiFi is not initialized by esp_wifi_init
- ESP_ERR_WIFI_ARG: invalid argument

Parameters

- `mask`: WiFi event mask.

esp_err_t **esp_wifi_80211_tx**(*wifi_interface_t ifx*, **const** void **buffer*, int *len*, bool *en_sys_seq*)

Send raw ieee80211 data.

Attention Currently only support for sending beacon/probe request/probe response/action and non-QoS data frame

Return

- ESP_OK: success
- ESP_ERR_WIFI_IF: Invalid interface
- ESP_ERR_INVALID_ARG: Invalid parameter
- ESP_ERR_WIFI_NO_MEM: out of memory

Parameters

- `ifx`: interface if the Wi-Fi mode is Station, the ifx should be WIFI_IF_STA. If the Wi-Fi mode is SoftAP, the ifx should be WIFI_IF_AP. If the Wi-Fi mode is Station+SoftAP, the ifx should be WIFI_IF_STA or WIFI_IF_AP. If the ifx is wrong, the API returns ESP_ERR_WIFI_IF.
- `buffer`: raw ieee80211 buffer
- `len`: the length of raw buffer, the len must be <= 1500 Bytes and >= 24 Bytes
- `en_sys_seq`: indicate whether use the internal sequence number. If en_sys_seq is false, the sequence in raw buffer is unchanged, otherwise it will be overwritten by WiFi driver with the system sequence number. Generally, if esp_wifi_80211_tx is called before the Wi-Fi connection has been set up, both en_sys_seq==true and en_sys_seq==false are fine. However, if the API is called after the Wi-Fi connection has been set up, en_sys_seq must be true, otherwise ESP_ERR_WIFI_ARG is returned.

esp_err_t **esp_wifi_set_csi_rx_cb**(*wifi_csi_cb_t cb*, void **ctx*)

Register the RX callback function of CSI data.

Each time a CSI data is received, the callback function will be called.

Return

- ESP_OK: succeed
- ESP_ERR_WIFI_NOT_INIT: WiFi is not initialized by esp_wifi_init

Parameters

- `cb`: callback
- `ctx`: context argument, passed to callback function

esp_err_t **esp_wifi_set_csi_config**(**const** *wifi_csi_config_t* **config*)

Set CSI data configuration.

return

- ESP_OK: succeed
- ESP_ERR_WIFI_NOT_INIT: WiFi is not initialized by esp_wifi_init
- ESP_ERR_WIFI_NOT_STARTED: WiFi is not started by esp_wifi_start or promiscuous mode is not enabled
- ESP_ERR_INVALID_ARG: invalid argument

Parameters

- `config`: configuration

esp_err_t **esp_wifi_set_csi**(bool *en*)
Enable or disable CSI.

return

- ESP_OK: succeed
- ESP_ERR_WIFI_NOT_INIT: WiFi is not initialized by esp_wifi_init
- ESP_ERR_WIFI_NOT_STARTED: WiFi is not started by esp_wifi_start or promiscuous mode is not enabled
- ESP_ERR_INVALID_ARG: invalid argument

Parameters
- `en`: true - enable, false - disable

esp_err_t **esp_wifi_set_ant_gpio**(**const** *wifi_ant_gpio_config_t* **config*)
Set antenna GPIO configuration.

Return
- ESP_OK: succeed
- ESP_ERR_WIFI_NOT_INIT: WiFi is not initialized by esp_wifi_init
- ESP_ERR_WIFI_ARG: Invalid argument, e.g. parameter is NULL, invalid GPIO number etc

Parameters
- `config`: Antenna GPIO configuration.

esp_err_t **esp_wifi_get_ant_gpio**(*wifi_ant_gpio_config_t* **config*)
Get current antenna GPIO configuration.

Return
- ESP_OK: succeed
- ESP_ERR_WIFI_NOT_INIT: WiFi is not initialized by esp_wifi_init
- ESP_ERR_WIFI_ARG: invalid argument, e.g. parameter is NULL

Parameters
- `config`: Antenna GPIO configuration.

esp_err_t **esp_wifi_set_ant**(**const** *wifi_ant_config_t* **config*)
Set antenna configuration.

Return
- ESP_OK: succeed
- ESP_ERR_WIFI_NOT_INIT: WiFi is not initialized by esp_wifi_init
- ESP_ERR_WIFI_ARG: Invalid argument, e.g. parameter is NULL, invalid antenna mode or invalid GPIO number

Parameters
- `config`: Antenna configuration.

esp_err_t **esp_wifi_get_ant**(*wifi_ant_config_t* **config*)
Get current antenna configuration.

Return
- ESP_OK: succeed
- ESP_ERR_WIFI_NOT_INIT: WiFi is not initialized by esp_wifi_init
- ESP_ERR_WIFI_ARG: invalid argument, e.g. parameter is NULL

Parameters
- `config`: Antenna configuration.

int64_t **esp_wifi_get_tsf_time**(*wifi_interface_t interface*)
Get the TSF time In Station mode or SoftAP+Station mode if station is not connected or station doesn't receive at least one beacon after connected, will return 0.

Attention Enabling power save may cause the return value inaccurate, except WiFi modem sleep
Return 0 or the TSF time
Parameters
- `interface`: The interface whose tsf_time is to be retrieved.

esp_err_t **esp_wifi_set_inactive_time** (*wifi_interface_t ifx*, uint16_t *sec*)

Set the inactive time of the ESP32 STA or AP.

Attention 1. For Station, If the station does not receive a beacon frame from the connected SoftAP during the inactive time, disconnect from SoftAP. Default 6s.

Attention 2. For SoftAP, If the softAP doesn't receive any data from the connected STA during inactive time, the softAP will force deauth the STA. Default is 300s.

Attention 3. The inactive time configuration is not stored into flash

Return

- ESP_OK: succeed
- ESP_ERR_WIFI_NOT_INIT: WiFi is not initialized by esp_wifi_init
- ESP_ERR_WIFI_NOT_STARTED: WiFi is not started by esp_wifi_start
- ESP_ERR_WIFI_ARG: invalid argument, For Station, if sec is less than 3. For SoftAP, if sec is less than 10.

Parameters

- `ifx`: interface to be configured.
- `sec`: Inactive time. Unit seconds.

esp_err_t **esp_wifi_get_inactive_time** (*wifi_interface_t ifx*, uint16_t **sec*)

Get inactive time of specified interface.

Return

- ESP_OK: succeed
- ESP_ERR_WIFI_NOT_INIT: WiFi is not initialized by esp_wifi_init
- ESP_ERR_WIFI_NOT_STARTED: WiFi is not started by esp_wifi_start
- ESP_ERR_WIFI_ARG: invalid argument

Parameters

- `ifx`: Interface to be configured.
- `sec`: Inactive time. Unit seconds.

esp_err_t **esp_wifi_statis_dump** (uint32_t *modules*)

Dump WiFi statistics.

Return

- ESP_OK: succeed
- others: failed

Parameters

- `modules`: statistic modules to be dumped

esp_err_t **esp_wifi_set_rssi_threshold** (int32_t *rssi*)

Set RSSI threshold below which APP will get an event.

Attention This API needs to be called every time after WIFI_EVENT_STA_BSS_RSSI_LOW event is received.

Return

- ESP_OK: succeed
- ESP_ERR_WIFI_NOT_INIT: WiFi is not initialized by esp_wifi_init
- ESP_ERR_WIFI_ARG: invalid argument

Parameters

- `rssi`: threshold value in dbm between -100 to 0

esp_err_t **esp_wifi_ftm_initiate_session** (*wifi_ftm_initiator_cfg_t* **cfg*)

Start an FTM Initiator session by sending FTM request If successful, event WIFI_EVENT_FTM_REPORT is generated with the result of the FTM procedure.

Attention 1. Use this API only in Station mode.

Attention 2. If FTM is initiated on a different channel than Station is connected in or internal SoftAP is started in, FTM defaults to a single burst in ASAP mode.

Return

- ESP_OK: succeed
- others: failed

Parameters

- `cfg`: FTM Initiator session configuration

esp_err_t **esp_wifi_ftm_end_session**(void)
End the ongoing FTM Initiator session.

Attention This API works only on FTM Initiator
Return
- ESP_OK: succeed
- others: failed

esp_err_t **esp_wifi_ftm_resp_set_offset**(int16_t *offset_cm*)
Set offset in cm for FTM Responder. An equivalent offset is calculated in picoseconds and added in TOD of FTM Measurement frame (T1).

Attention Use this API only in AP mode before performing FTM as responder
Return
- ESP_OK: succeed
- others: failed

Parameters
- `offset_cm`: T1 Offset to be added in centimeters

esp_err_t **esp_wifi_config_11b_rate**(*wifi_interface_t ifx*, bool *disable*)
Enable or disable 11b rate of specified interface.

Attention 1. This API should be called after esp_wifi_init() and before esp_wifi_start().
Attention 2. Only when really need to disable 11b rate call this API otherwise don't call this.
Return
- ESP_OK: succeed
- others: failed

Parameters
- `ifx`: Interface to be configured.
- `disable`: true means disable 11b rate while false means enable 11b rate.

esp_err_t **esp_wifi_set_connectionless_wake_interval**(uint16_t *interval*)
Set interval for station to wake up periodically at disconnected.

Attention 1. Only when ESP_WIFI_STA_DISCONNECTED_PM_ENABLE is enabled, this configuration could work
Attention 2. This configuration only work for station mode and disconnected status
Attention 3. This configuration would influence nothing until some module configure wake_window
Attention 4. A sensible interval which is not too small is recommended (e.g. 100ms)
Parameters
- `interval`: how much milliseconds would the chip wake up, from 1 to 65535.

esp_err_t **esp_wifi_set_country_code**(**const** char **country*, bool *ieee80211d_enabled*)
configure country

Attention 1. When ieee80211d_enabled, the country info of the AP to which the station is connected is used. E.g. if the configured country is US and the country info of the AP to which the station is connected is JP then the country info that will be used is JP. If the station disconnected from the AP the country info is set back to the country info of the station automatically, US in the example.
Attention 2. When ieee80211d_enabled is disabled, then the configured country info is used always.
Attention 3. When the country info is changed because of configuration or because the station connects to a different external AP, the country IE in probe response/beacon of the soft-AP is also changed.
Attention 4. The country configuration is stored into flash.
Attention 5. When this API is called, the PHY init data will switch to the PHY init data type corresponding to the country info.
Attention 6. Supported country codes are "01" (world safe mode) "AT" ," AU" ," BE" ," BG" ," BR" , "CA" ," CH" ," CN" ," CY" ," CZ" ," DE" ," DK" ," EE" ," ES" ," FI" ," FR" ," GB" ," GR" ," HK" ," HR" ," HU" , "IE" ," IN" ," IS" ," IT" ," JP" ," KR" ," LI" ," LT" ," LU" ," LV" ," MT" ," MX" ," NL" ," NO" ," NZ" ," PL" ," PT" , "RO" ," SE" ," SI" ," SK" ," TW" ," US"
Attention 7. When country code "01" (world safe mode) is set, SoftAP mode won't contain country IE.
Attention 8. The default country is "CN" and ieee80211d_enabled is TRUE.

Attention 9. The third octet of country code string is one of the following: ' ', 'O', 'I', 'X', otherwise it is considered as ' '.

Return

- ESP_OK: succeed
- ESP_ERR_WIFI_NOT_INIT: WiFi is not initialized by esp_wifi_init
- ESP_ERR_INVALID_ARG: invalid argument

Parameters

- `country`: the configured country ISO code
- `ieee80211d_enabled`: 802.11d is enabled or not

esp_err_t **esp_wifi_get_country_code**(char **country*)

get the current country code

Return

- ESP_OK: succeed
- ESP_ERR_WIFI_NOT_INIT: WiFi is not initialized by esp_wifi_init
- ESP_ERR_INVALID_ARG: invalid argument

Parameters

- `country`: country code

esp_err_t **esp_wifi_config_80211_tx_rate**(*wifi_interface_t ifx*, *wifi_phy_rate_t rate*)

Config 80211 tx rate of specified interface.

Attention 1. This API should be called after esp_wifi_init() and before esp_wifi_start().

Return

- ESP_OK: succeed
- others: failed

Parameters

- `ifx`: Interface to be configured.
- `rate`: Phy rate to be configured.

esp_err_t **esp_wifi_disable_pmf_config**(*wifi_interface_t ifx*)

Disable PMF configuration for specified interface.

Attention This API should be called after esp_wifi_set_config() and before esp_wifi_start().

Return

- ESP_OK: succeed
- others: failed

Parameters

- `ifx`: Interface to be configured.

esp_err_t **esp_wifi_sta_get_rssi**(int **rssi*)

Get the rssi info after station connected to AP.

Attention This API should be called after station connected to AP.

Return

- ESP_OK: succeed
- ESP_ERR_INVALID_ARG: invalid argument
- ESP_FAIL: failed

Parameters

- `rssi`: store the rssi info received from last beacon.

Structures

struct wifi_init_config_t

WiFi stack configuration parameters passed to esp_wifi_init call.

Public Members

system_event_handler_t **event_handler**

WiFi event handler

wifi_osi_funcs_t ***osi_funcs**
WiFi OS functions

wpa_crypto_funcs_t **wpa_crypto_funcs**
WiFi station crypto functions when connect

int **static_rx_buf_num**
WiFi static RX buffer number

int **dynamic_rx_buf_num**
WiFi dynamic RX buffer number

int **tx_buf_type**
WiFi TX buffer type

int **static_tx_buf_num**
WiFi static TX buffer number

int **dynamic_tx_buf_num**
WiFi dynamic TX buffer number

int **cache_tx_buf_num**
WiFi TX cache buffer number

int **csi_enable**
WiFi channel state information enable flag

int **ampdu_rx_enable**
WiFi AMPDU RX feature enable flag

int **ampdu_tx_enable**
WiFi AMPDU TX feature enable flag

int **amsdu_tx_enable**
WiFi AMSDU TX feature enable flag

int **nvs_enable**
WiFi NVS flash enable flag

int **nano_enable**
Nano option for printf/scan family enable flag

int **rx_ba_win**
WiFi Block Ack RX window size

int **wifi_task_core_id**
WiFi Task Core ID

int **beacon_max_len**
WiFi softAP maximum length of the beacon

int **mgmt_sbuf_num**
WiFi management short buffer number, the minimum value is 6, the maximum value is 32

uint64_t **feature_caps**
Enables additional WiFi features and capabilities

bool **sta_disconnected_pm**
WiFi Power Management for station at disconnected status

int **magic**
WiFi init magic number, it should be the last field

Macros

ESP_ERR_WIFI_NOT_INIT
WiFi driver was not installed by esp_wifi_init

ESP_ERR_WIFI_NOT_STARTED
WiFi driver was not started by esp_wifi_start

ESP_ERR_WIFI_NOT_STOPPED
WiFi driver was not stopped by esp_wifi_stop

ESP_ERR_WIFI_IF
WiFi interface error

ESP_ERR_WIFI_MODE
WiFi mode error

ESP_ERR_WIFI_STATE
WiFi internal state error

ESP_ERR_WIFI_CONN
WiFi internal control block of station or soft-AP error

ESP_ERR_WIFI_NVS
WiFi internal NVS module error

ESP_ERR_WIFI_MAC
MAC address is invalid

ESP_ERR_WIFI_SSID
SSID is invalid

ESP_ERR_WIFI_PASSWORD
Password is invalid

ESP_ERR_WIFI_TIMEOUT
Timeout error

ESP_ERR_WIFI_WAKE_FAIL
WiFi is in sleep state(RF closed) and wakeup fail

ESP_ERR_WIFI_WOULD_BLOCK
The caller would block

ESP_ERR_WIFI_NOT_CONNECT
Station still in disconnect status

ESP_ERR_WIFI_POST
Failed to post the event to WiFi task

ESP_ERR_WIFI_INIT_STATE
Invalid WiFi state when init/deinit is called

ESP_ERR_WIFI_STOP_STATE
Returned when WiFi is stopping

ESP_ERR_WIFI_NOT_ASSOC
The WiFi connection is not associated

ESP_ERR_WIFI_TX_DISALLOW
The WiFi TX is disallowed

ESP_ERR_WIFI_DISCARD
Discard frame

WIFI_STATIC_TX_BUFFER_NUM

WIFI_CACHE_TX_BUFFER_NUM

WIFI_DYNAMIC_TX_BUFFER_NUM

WIFI_CSI_ENABLED

WIFI_AMPDU_RX_ENABLED

WIFI_AMPDU_TX_ENABLED

WIFI_AMSDU_TX_ENABLED

WIFI_NVS_ENABLED

WIFI_NANO_FORMAT_ENABLED

WIFI_INIT_CONFIG_MAGIC

WIFI_DEFAULT_RX_BA_WIN

WIFI_TASK_CORE_ID

WIFI_SOFTAP_BEACON_MAX_LEN

WIFI_MGMT_SBUF_NUM

WIFI_STA_DISCONNECTED_PM_ENABLED

CONFIG_FEATURE_WPA3_SAE_BIT

CONFIG_FEATURE_CACHE_TX_BUF_BIT

CONFIG_FEATURE_FTM_INITIATOR_BIT

CONFIG_FEATURE_FTM_RESPONDER_BIT

WIFI_INIT_CONFIG_DEFAULT()

Type Definitions

typedef void (***wifi_promiscuous_cb_t**)(void *buf, *wifi_promiscuous_pkt_type_t* type)

The RX callback function in the promiscuous mode. Each time a packet is received, the callback function will be called.

Parameters

- `buf`: Data received. Type of data in buffer (*wifi_promiscuous_pkt_t* or *wifi_pkt_rx_ctrl_t*) indicated by 'type' parameter.
- `type`: promiscuous packet type.

typedef void (***esp_vendor_ie_cb_t**)(void *ctx, *wifi_vendor_ie_type_t* type, **const** uint8_t sa[6], **const** *vendor_ie_data_t* *vnd_ie, int rssi)

Function signature for received Vendor-Specific Information Element callback.

Parameters

- `ctx`: Context argument, as passed to esp_wifi_set_vendor_ie_cb() when registering callback.
- `type`: Information element type, based on frame type received.
- `sa`: Source 802.11 address.
- `vnd_ie`: Pointer to the vendor specific element data received.
- `rssi`: Received signal strength indication.

typedef void (***wifi_csi_cb_t**)(void *ctx, *wifi_csi_info_t* *data)

The RX callback function of Channel State Information(CSI) data.

Each time a CSI data is received, the callback function will be called.

Parameters

- `ctx`: context argument, passed to esp_wifi_set_csi_rx_cb() when registering callback function.
- `data`: CSI data received. The memory that it points to will be deallocated after callback function returns.

Header File

- esp_wifi/include/esp_wifi_types.h

Unions

union wifi_config_t

#include <esp_wifi_types.h> Configuration data for ESP32 AP or STA.

The usage of this union (for ap or sta configuration) is determined by the accompanying interface argument passed to esp_wifi_set_config() or esp_wifi_get_config()

Public Members

wifi_ap_config_t **ap**
configuration of AP

wifi_sta_config_t **sta**
configuration of STA

Structures

struct wifi_country_t

Structure describing WiFi country-based regional restrictions.

Public Members

char **cc**[3]
country code string

uint8_t **schan**
start channel

uint8_t **nchan**
total channel number

int8_t **max_tx_power**
This field is used for getting WiFi maximum transmitting power, call esp_wifi_set_max_tx_power to set the maximum transmitting power.

wifi_country_policy_t **policy**
country policy

struct wifi_active_scan_time_t

Range of active scan times per channel.

Public Members

uint32_t **min**
minimum active scan time per channel, units: millisecond

uint32_t **max**
maximum active scan time per channel, units: millisecond, values above 1500ms may cause station to disconnect from AP and are not recommended.

struct wifi_scan_time_t

Aggregate of active & passive scan time per channel.

Public Members

wifi_active_scan_time_t **active**
active scan time per channel, units: millisecond.

uint32_t **passive**
passive scan time per channel, units: millisecond, values above 1500ms may cause station to disconnect from AP and are not recommended.

struct wifi_scan_config_t
Parameters for an SSID scan.

Public Members

uint8_t ***ssid**
SSID of AP

uint8_t ***bssid**
MAC address of AP

uint8_t **channel**
channel, scan the specific channel

bool **show_hidden**
enable to scan AP whose SSID is hidden

wifi_scan_type_t **scan_type**
scan type, active or passive

wifi_scan_time_t **scan_time**
scan time per channel

uint8_t **home_chan_dwell_time**
time spent at home channel between scanning consecutive channels.

struct wifi_ap_record_t
Description of a WiFi AP.

Public Members

uint8_t **bssid**[6]
MAC address of AP

uint8_t **ssid**[33]
SSID of AP

uint8_t **primary**
channel of AP

wifi_second_chan_t **second**
secondary channel of AP

int8_t **rssi**
signal strength of AP

wifi_auth_mode_t **authmode**
authmode of AP

wifi_cipher_type_t **pairwise_cipher**
pairwise cipher of AP

wifi_cipher_type_t **group_cipher**
group cipher of AP

wifi_ant_t **ant**
antenna used to receive beacon from AP

uint32_t **phy_11b** : 1
bit: 0 flag to identify if 11b mode is enabled or not

uint32_t **phy_11g** : 1
bit: 1 flag to identify if 11g mode is enabled or not

uint32_t **phy_11n** : 1
bit: 2 flag to identify if 11n mode is enabled or not

uint32_t **phy_lr** : 1
bit: 3 flag to identify if low rate is enabled or not

uint32_t **wps** : 1
bit: 4 flag to identify if WPS is supported or not

uint32_t **ftm_responder** : 1
bit: 5 flag to identify if FTM is supported in responder mode

uint32_t **ftm_initiator** : 1
bit: 6 flag to identify if FTM is supported in initiator mode

uint32_t **reserved** : 25
bit: 7..31 reserved

wifi_country_t **country**
country information of AP

struct wifi_scan_threshold_t
Structure describing parameters for a WiFi fast scan.

Public Members

int8_t **rssi**
The minimum rssi to accept in the fast scan mode

wifi_auth_mode_t **authmode**
The weakest authmode to accept in the fast scan mode

struct wifi_pmf_config_t
Configuration structure for Protected Management Frame

Public Members

bool **capable**
Deprecated variable. Device will always connect in PMF mode if other device also advertizes PMF capability.

bool **required**
Advertizes that Protected Management Frame is required. Device will not associate to non-PMF capable devices.

struct wifi_ap_config_t
Soft-AP configuration settings for the ESP32.

Public Members

uint8_t **ssid**[32]
SSID of ESP32 soft-AP. If ssid_len field is 0, this must be a Null terminated string. Otherwise, length is set according to ssid_len.

uint8_t **password**[64]
Password of ESP32 soft-AP.

uint8_t **ssid_len**
Optional length of SSID field.

uint8_t **channel**
Channel of soft-AP

wifi_auth_mode_t **authmode**
Auth mode of soft-AP. Do not support AUTH_WEP, AUTH_WAPI_PSK and AUTH_OWE in soft-AP

mode. When the auth mode is set to WPA2_PSK, WPA2_WPA3_PSK or WPA3_PSK, the pairwise cipher will be overwritten with WIFI_CIPHER_TYPE_CCMP.

uint8_t **ssid_hidden**
Broadcast SSID or not, default 0, broadcast the SSID

uint8_t **max_connection**
Max number of stations allowed to connect in, default 4, max 10

uint16_t **beacon_interval**
Beacon interval which should be multiples of 100. Unit: TU(time unit, 1 TU = 1024 us). Range: 100 ~ 60000. Default value: 100

wifi_cipher_type_t **pairwise_cipher**
Pairwise cipher of SoftAP, group cipher will be derived using this. Cipher values are valid starting from WIFI_CIPHER_TYPE_TKIP, enum values before that will be considered as invalid and default cipher suites(TKIP+CCMP) will be used. Valid cipher suites in softAP mode are WIFI_CIPHER_TYPE_TKIP, WIFI_CIPHER_TYPE_CCMP and WIFI_CIPHER_TYPE_TKIP_CCMP.

bool **ftm_responder**
Enable FTM Responder mode

struct wifi_sta_config_t
STA configuration settings for the ESP32.

Public Members

uint8_t **ssid**[32]
SSID of target AP.

uint8_t **password**[64]
Password of target AP.

wifi_scan_method_t **scan_method**
do all channel scan or fast scan

bool **bssid_set**
whether set MAC address of target AP or not. Generally, station_config.bssid_set needs to be 0; and it needs to be 1 only when users need to check the MAC address of the AP.

uint8_t **bssid**[6]
MAC address of target AP

uint8_t **channel**
channel of target AP. Set to 1~13 to scan starting from the specified channel before connecting to AP. If the channel of AP is unknown, set it to 0.

uint16_t **listen_interval**
Listen interval for ESP32 station to receive beacon when WIFI_PS_MAX_MODEM is set. Units: AP beacon intervals. Defaults to 3 if set to 0.

wifi_sort_method_t **sort_method**
sort the connect AP in the list by rssi or security mode

wifi_scan_threshold_t **threshold**
When sort_method is set, only APs which have an auth mode that is more secure than the selected auth mode and a signal stronger than the minimum RSSI will be used.

wifi_pmf_config_t **pmf_cfg**
Configuration for Protected Management Frame. Will be advertized in RSN Capabilities in RSN IE.

uint32_t **rm_enabled** : 1
Whether Radio Measurements are enabled for the connection

uint32_t **btm_enabled** : 1
Whether BSS Transition Management is enabled for the connection

uint32_t **transition_disable** : 1
Whether to enable transition disable feature

uint32_t **reserved** : 29
Reserved for future feature set

wifi_sae_pwe_method_t **sae_pwe_h2e**
Whether SAE hash to element is enabled

uint8_t **failure_retry_cnt**
Number of connection retries station will do before moving to next AP. scan_method should be set as WIFI_ALL_CHANNEL_SCAN to use this config. Note: Enabling this may cause connection time to increase incase best AP doesn't behave properly.

struct wifi_sta_info_t
Description of STA associated with AP.

Public Members

uint8_t **mac**[6]
mac address

int8_t **rssi**
current average rssi of sta connected

uint32_t **phy_11b** : 1
bit: 0 flag to identify if 11b mode is enabled or not

uint32_t **phy_11g** : 1
bit: 1 flag to identify if 11g mode is enabled or not

uint32_t **phy_11n** : 1
bit: 2 flag to identify if 11n mode is enabled or not

uint32_t **phy_lr** : 1
bit: 3 flag to identify if low rate is enabled or not

uint32_t **is_mesh_child** : 1
bit: 4 flag to identify mesh child

uint32_t **reserved** : 27
bit: 5..31 reserved

struct wifi_sta_list_t
List of stations associated with the ESP32 Soft-AP.

Public Members

wifi_sta_info_t **sta**[**ESP_WIFI_MAX_CONN_NUM**]
station list

int **num**
number of stations in the list (other entries are invalid)

struct vendor_ie_data_t
Vendor Information Element header.

The first bytes of the Information Element will match this header. Payload follows.

Public Members

uint8_t **element_id**
Should be set to WIFI_VENDOR_IE_ELEMENT_ID (0xDD)

uint8_t **length**
Length of all bytes in the element data following this field. Minimum 4.

uint8_t **vendor_oui**[3]
Vendor identifier (OUI).

uint8_t **vendor_oui_type**
Vendor-specific OUI type.

uint8_t **payload**[0]
Payload. Length is equal to value in ‘length’ field, minus 4.

struct wifi_pkt_rx_ctrl_t
Received packet radio metadata header, this is the common header at the beginning of all promiscuous mode RX callback buffers.

Public Members

signed **rssi** : 8
Received Signal Strength Indicator(RSSI) of packet. unit: dBm

unsigned **rate** : 5
PHY rate encoding of the packet. Only valid for non HT(11bg) packet

unsigned **__pad0__** : 1
reserved

unsigned **sig_mode** : 2
0: non HT(11bg) packet; 1: HT(11n) packet; 3: VHT(11ac) packet

unsigned **__pad1__** : 16
reserved

unsigned **mcs** : 7
Modulation Coding Scheme. If is HT(11n) packet, shows the modulation, range from 0 to 76(MSC0 ~ MCS76)

unsigned **cwb** : 1
Channel Bandwidth of the packet. 0: 20MHz; 1: 40MHz

unsigned **__pad2__** : 16
reserved

unsigned **smoothing** : 1
reserved

unsigned **not_sounding** : 1
reserved

unsigned **__pad3__** : 1
reserved

unsigned **aggregation** : 1
Aggregation. 0: MPDU packet; 1: AMPDU packet

unsigned **stbc** : 2
Space Time Block Code(STBC). 0: non STBC packet; 1: STBC packet

unsigned **fec_coding** : 1
Flag is set for 11n packets which are LDPC

unsigned **sgi** : 1
Short Guide Interval(SGI). 0: Long GI; 1: Short GI

signed **noise_floor** : 8
noise floor of Radio Frequency Module(RF). unit: dBm

unsigned **ampdu_cnt** : 8
ampdu cnt

unsigned **channel** : 4
primary channel on which this packet is received

unsigned **secondary_channel** : 4
secondary channel on which this packet is received. 0: none; 1: above; 2: below

unsigned **__pad4__** : 8
reserved

unsigned **timestamp** : 32
timestamp. The local time when this packet is received. It is precise only if modem sleep or light sleep is not enabled. unit: microsecond

unsigned **__pad5__** : 32
reserved

unsigned **__pad6__** : 31
reserved

unsigned **ant** : 1
antenna number from which this packet is received. 0: WiFi antenna 0; 1: WiFi antenna 1

unsigned **sig_len** : 12
length of packet including Frame Check Sequence(FCS)

unsigned **__pad7__** : 12
reserved

unsigned **rx_state** : 8
state of the packet. 0: no error; others: error numbers which are not public

struct wifi_promiscuous_pkt_t
Payload passed to ‘buf’ parameter of promiscuous mode RX callback.

Public Members

wifi_pkt_rx_ctrl_t **rx_ctrl**
metadata header

uint8_t **payload**[0]
Data or management payload. Length of payload is described by rx_ctrl.sig_len. Type of content determined by packet type argument of callback.

struct wifi_promiscuous_filter_t
Mask for filtering different packet types in promiscuous mode.

Public Members

uint32_t **filter_mask**
OR of one or more filter values WIFI_PROMIS_FILTER_*

struct wifi_csi_config_t
Channel state information(CSI) configuration type.

Public Members

bool **lltf_en**
enable to receive legacy long training field(lltf) data. Default enabled

bool **htltf_en**
enable to receive HT long training field(htltf) data. Default enabled

bool **stbc_htltf2_en**
enable to receive space time block code HT long training field(stbc-htltf2) data. Default enabled

bool **ltf_merge_en**
enable to generate htlft data by averaging lltf and ht_ltf data when receiving HT packet. Otherwise, use ht_ltf data directly. Default enabled

bool **channel_filter_en**
enable to turn on channel filter to smooth adjacent sub-carrier. Disable it to keep independence of adjacent sub-carrier. Default enabled

bool **manu_scale**
manually scale the CSI data by left shifting or automatically scale the CSI data. If set true, please set the shift bits. false: automatically. true: manually. Default false

uint8_t **shift**
manually left shift bits of the scale of the CSI data. The range of the left shift bits is 0~15

struct wifi_csi_info_t
CSI data type.

Public Members

wifi_pkt_rx_ctrl_t **rx_ctrl**
received packet radio metadata header of the CSI data

uint8_t **mac**[6]
source MAC address of the CSI data

bool **first_word_invalid**
first four bytes of the CSI data is invalid or not

int8_t ***buf**
buffer of CSI data

uint16_t **len**
length of CSI data

struct wifi_ant_gpio_t
WiFi GPIO configuration for antenna selection.

Public Members

uint8_t **gpio_select** : 1
Whether this GPIO is connected to external antenna switch

uint8_t **gpio_num** : 7
The GPIO number that connects to external antenna switch

struct wifi_ant_gpio_config_t
WiFi GPIOs configuration for antenna selection.

Public Members

wifi_ant_gpio_t **gpio_cfg**[4]
The configurations of GPIOs that connect to external antenna switch

struct wifi_ant_config_t
WiFi antenna configuration.

Public Members

wifi_ant_mode_t **rx_ant_mode**
WiFi antenna mode for receiving

wifi_ant_t **rx_ant_default**
Default antenna mode for receiving, it’ s ignored if rx_ant_mode is not WIFI_ANT_MODE_AUTO

wifi_ant_mode_t **tx_ant_mode**
WiFi antenna mode for transmission, it can be set to WIFI_ANT_MODE_AUTO only if rx_ant_mode is set to WIFI_ANT_MODE_AUTO

uint8_t **enabled_ant0** : 4
Index (in antenna GPIO configuration) of enabled WIFI_ANT_MODE_ANT0

uint8_t **enabled_ant1** : 4
Index (in antenna GPIO configuration) of enabled WIFI_ANT_MODE_ANT1

struct wifi_action_tx_req_t
Action Frame Tx Request.

Public Members

wifi_interface_t **ifx**
WiFi interface to send request to

uint8_t **dest_mac**[6]
Destination MAC address

bool **no_ack**
Indicates no ack required

wifi_action_rx_cb_t **rx_cb**
Rx Callback to receive any response

uint32_t **data_len**
Length of the appended Data

uint8_t **data**[0]
Appended Data payload

struct wifi_ftm_initiator_cfg_t
FTM Initiator configuration.

Public Members

uint8_t **resp_mac**[6]
MAC address of the FTM Responder

uint8_t **channel**
Primary channel of the FTM Responder

uint8_t **frm_count**
No. of FTM frames requested in terms of 4 or 8 bursts (allowed values - 0(No pref), 16, 24, 32, 64)

uint16_t **burst_period**
Requested time period between consecutive FTM bursts in 100’s of milliseconds (0 - No pref)

struct wifi_event_sta_scan_done_t
Argument structure for WIFI_EVENT_SCAN_DONE event

Public Members

uint32_t **status**
status of scanning APs: 0 —success, 1 - failure

uint8_t **number**
number of scan results

uint8_t **scan_id**
scan sequence number, used for block scan

struct wifi_event_sta_connected_t
Argument structure for WIFI_EVENT_STA_CONNECTED event

Public Members

uint8_t **ssid**[32]
SSID of connected AP

uint8_t **ssid_len**
SSID length of connected AP

uint8_t **bssid**[6]
BSSID of connected AP

uint8_t **channel**
channel of connected AP

wifi_auth_mode_t **authmode**
authentication mode used by AP

struct wifi_event_sta_disconnected_t
Argument structure for WIFI_EVENT_STA_DISCONNECTED event

Public Members

uint8_t **ssid**[32]
SSID of disconnected AP

uint8_t **ssid_len**
SSID length of disconnected AP

uint8_t **bssid**[6]
BSSID of disconnected AP

uint8_t **reason**
reason of disconnection

int8_t **rssi**
rssi of disconnection

struct wifi_event_sta_authmode_change_t
Argument structure for WIFI_EVENT_STA_AUTHMODE_CHANGE event

Public Members

wifi_auth_mode_t **old_mode**
the old auth mode of AP

wifi_auth_mode_t **new_mode**
the new auth mode of AP

struct wifi_event_sta_wps_er_pin_t
Argument structure for WIFI_EVENT_STA_WPS_ER_PIN event

Public Members

uint8_t **pin_code**[8]
PIN code of station in enrollee mode

struct wifi_event_sta_wps_er_success_t
Argument structure for WIFI_EVENT_STA_WPS_ER_SUCCESS event

Public Members

uint8_t **ap_cred_cnt**
Number of AP credentials received

uint8_t **ssid**[**MAX_SSID_LEN**]
SSID of AP

uint8_t **passphrase**[**MAX_PASSPHRASE_LEN**]
Passphrase for the AP

struct *wifi_event_sta_wps_er_success_t*::**[anonymous]** **ap_cred**[**MAX_WPS_AP_CRED**]
All AP credentials received from WPS handshake

struct wifi_event_ap_staconnected_t
Argument structure for WIFI_EVENT_AP_STACONNECTED event

Public Members

uint8_t **mac**[6]
MAC address of the station connected to ESP32 soft-AP

uint8_t **aid**
the aid that ESP32 soft-AP gives to the station connected to

bool **is_mesh_child**
flag to identify mesh child

struct wifi_event_ap_stadisconnected_t
Argument structure for WIFI_EVENT_AP_STADISCONNECTED event

Public Members

uint8_t **mac**[6]
MAC address of the station disconnects to ESP32 soft-AP

uint8_t **aid**
the aid that ESP32 soft-AP gave to the station disconnects to

bool **is_mesh_child**
flag to identify mesh child

struct wifi_event_ap_probe_req_rx_t
Argument structure for WIFI_EVENT_AP_PROBEREQRECVED event

Public Members

int **rssi**
Received probe request signal strength

uint8_t **mac**[6]
MAC address of the station which send probe request

struct wifi_event_bss_rssi_low_t
Argument structure for WIFI_EVENT_STA_BSS_RSSI_LOW event

Public Members

int32_t **rssi**
RSSI value of bss

struct wifi_ftm_report_entry_t
Argument structure for

Public Members

uint8_t **dlog_token**
Dialog Token of the FTM frame

int8_t **rssi**
RSSI of the FTM frame received

uint32_t **rtt**
Round Trip Time in pSec with a peer

uint64_t **t1**
Time of departure of FTM frame from FTM Responder in pSec

uint64_t **t2**
Time of arrival of FTM frame at FTM Initiator in pSec

uint64_t **t3**
Time of departure of ACK from FTM Initiator in pSec

uint64_t **t4**
Time of arrival of ACK at FTM Responder in pSec

struct wifi_event_ftm_report_t
Argument structure for WIFI_EVENT_FTM_REPORT event

Public Members

uint8_t **peer_mac**[6]
MAC address of the FTM Peer

wifi_ftm_status_t **status**
Status of the FTM operation

uint32_t **rtt_raw**
Raw average Round-Trip-Time with peer in Nano-Seconds

uint32_t **rtt_est**
Estimated Round-Trip-Time with peer in Nano-Seconds

uint32_t **dist_est**
Estimated one-way distance in Centi-Meters

wifi_ftm_report_entry_t ***ftm_report_data**
Pointer to FTM Report with multiple entries, should be freed after use

uint8_t **ftm_report_num_entries**
Number of entries in the FTM Report data

struct wifi_event_action_tx_status_t
Argument structure for WIFI_EVENT_ACTION_TX_STATUS event

Public Members

wifi_interface_t **ifx**
WiFi interface to send request to

uint32_t **context**
Context to identify the request

uint8_t **da**[6]
Destination MAC address

uint8_t **status**
Status of the operation

struct wifi_event_roc_done_t
Argument structure for WIFI_EVENT_ROC_DONE event

Public Members

uint32_t **context**
Context to identify the request

Macros

WIFI_OFFCHAN_TX_REQ
WIFI_OFFCHAN_TX_CANCEL

WIFI_ROC_REQ

WIFI_ROC_CANCEL

WIFI_PROTOCOL_11B

WIFI_PROTOCOL_11G

WIFI_PROTOCOL_11N

WIFI_PROTOCOL_LR

ESP_WIFI_MAX_CONN_NUM
max number of stations which can connect to ESP32 soft-AP

WIFI_VENDOR_IE_ELEMENT_ID

WIFI_PROMIS_FILTER_MASK_ALL
filter all packets

WIFI_PROMIS_FILTER_MASK_MGMT
filter the packets with type of WIFI_PKT_MGMT

WIFI_PROMIS_FILTER_MASK_CTRL
filter the packets with type of WIFI_PKT_CTRL

WIFI_PROMIS_FILTER_MASK_DATA
filter the packets with type of WIFI_PKT_DATA

WIFI_PROMIS_FILTER_MASK_MISC
filter the packets with type of WIFI_PKT_MISC

WIFI_PROMIS_FILTER_MASK_DATA_MPDU
filter the MPDU which is a kind of WIFI_PKT_DATA

WIFI_PROMIS_FILTER_MASK_DATA_AMPDU
filter the AMPDU which is a kind of WIFI_PKT_DATA

WIFI_PROMIS_FILTER_MASK_FCSFAIL
filter the FCS failed packets, do not open it in general

WIFI_PROMIS_CTRL_FILTER_MASK_ALL
filter all control packets

WIFI_PROMIS_CTRL_FILTER_MASK_WRAPPER
filter the control packets with subtype of Control Wrapper

WIFI_PROMIS_CTRL_FILTER_MASK_BAR
filter the control packets with subtype of Block Ack Request

WIFI_PROMIS_CTRL_FILTER_MASK_BA
filter the control packets with subtype of Block Ack

WIFI_PROMIS_CTRL_FILTER_MASK_PSPOLL
filter the control packets with subtype of PS-Poll

WIFI_PROMIS_CTRL_FILTER_MASK_RTS
filter the control packets with subtype of RTS

WIFI_PROMIS_CTRL_FILTER_MASK_CTS
filter the control packets with subtype of CTS

WIFI_PROMIS_CTRL_FILTER_MASK_ACK
filter the control packets with subtype of ACK

WIFI_PROMIS_CTRL_FILTER_MASK_CFEND
filter the control packets with subtype of CF-END

WIFI_PROMIS_CTRL_FILTER_MASK_CFENDACK
filter the control packets with subtype of CF-END+CF-ACK

WIFI_EVENT_MASK_ALL
mask all WiFi events

WIFI_EVENT_MASK_NONE
mask none of the WiFi events

WIFI_EVENT_MASK_AP_PROBEREQRECVED
mask SYSTEM_EVENT_AP_PROBEREQRECVED event

MAX_SSID_LEN

MAX_PASSPHRASE_LEN

MAX_WPS_AP_CRED

WIFI_STATIS_BUFFER

WIFI_STATIS_RXTX

WIFI_STATIS_HW

WIFI_STATIS_DIAG

WIFI_STATIS_PS

WIFI_STATIS_ALL

Type Definitions

typedef int (***wifi_action_rx_cb_t**)(uint8_t *hdr, uint8_t *payload, size_t len, uint8_t channel)

The Rx callback function of Action Tx operations.

Parameters

- `hdr`: pointer to the IEEE 802.11 Header structure
- `payload`: pointer to the Payload following 802.11 Header
- `len`: length of the Payload
- `channel`: channel number the frame is received on

Enumerations

enum wifi_mode_t

Values:

WIFI_MODE_NULL = 0
null mode

WIFI_MODE_STA
WiFi station mode

WIFI_MODE_AP
WiFi soft-AP mode

WIFI_MODE_APSTA
WiFi station + soft-AP mode

WIFI_MODE_MAX

enum wifi_interface_t

Values:

WIFI_IF_STA = ESP_IF_WIFI_STA

WIFI_IF_AP = ESP_IF_WIFI_AP

enum wifi_country_policy_t

Values:

WIFI_COUNTRY_POLICY_AUTO
Country policy is auto, use the country info of AP to which the station is connected

WIFI_COUNTRY_POLICY_MANUAL
Country policy is manual, always use the configured country info

enum wifi_auth_mode_t

Values:

WIFI_AUTH_OPEN = 0
authenticate mode : open

WIFI_AUTH_WEP
authenticate mode : WEP

WIFI_AUTH_WPA_PSK
authenticate mode : WPA_PSK

WIFI_AUTH_WPA2_PSK
authenticate mode : WPA2_PSK

WIFI_AUTH_WPA_WPA2_PSK
authenticate mode : WPA_WPA2_PSK

WIFI_AUTH_WPA2_ENTERPRISE
authenticate mode : WPA2_ENTERPRISE

WIFI_AUTH_WPA3_PSK
authenticate mode : WPA3_PSK

WIFI_AUTH_WPA2_WPA3_PSK
authenticate mode : WPA2_WPA3_PSK

WIFI_AUTH_WAPI_PSK
authenticate mode : WAPI_PSK

WIFI_AUTH_MAX

enum wifi_err_reason_t
Values:

WIFI_REASON_UNSPECIFIED = 1

WIFI_REASON_AUTH_EXPIRE = 2

WIFI_REASON_AUTH_LEAVE = 3

WIFI_REASON_ASSOC_EXPIRE = 4

WIFI_REASON_ASSOC_TOOMANY = 5

WIFI_REASON_NOT_AUTHED = 6

WIFI_REASON_NOT_ASSOCED = 7

WIFI_REASON_ASSOC_LEAVE = 8

WIFI_REASON_ASSOC_NOT_AUTHED = 9

WIFI_REASON_DISASSOC_PWRCAP_BAD = 10

WIFI_REASON_DISASSOC_SUPCHAN_BAD = 11

WIFI_REASON_BSS_TRANSITION_DISASSOC = 12

WIFI_REASON_IE_INVALID = 13

WIFI_REASON_MIC_FAILURE = 14

WIFI_REASON_4WAY_HANDSHAKE_TIMEOUT = 15

WIFI_REASON_GROUP_KEY_UPDATE_TIMEOUT = 16

WIFI_REASON_IE_IN_4WAY_DIFFERS = 17

WIFI_REASON_GROUP_CIPHER_INVALID = 18

WIFI_REASON_PAIRWISE_CIPHER_INVALID = 19

WIFI_REASON_AKMP_INVALID = 20

WIFI_REASON_UNSUPP_RSN_IE_VERSION = 21

WIFI_REASON_INVALID_RSN_IE_CAP = 22

WIFI_REASON_802_1X_AUTH_FAILED = 23

WIFI_REASON_CIPHER_SUITE_REJECTED = 24

WIFI_REASON_TDLS_PEER_UNREACHABLE = 25

WIFI_REASON_TDLS_UNSPECIFIED = 26

WIFI_REASON_SSP_REQUESTED_DISASSOC = 27

WIFI_REASON_NO_SSP_ROAMING_AGREEMENT = 28

WIFI_REASON_BAD_CIPHER_OR_AKM = 29

WIFI_REASON_NOT_AUTHORIZED_THIS_LOCATION = 30

WIFI_REASON_SERVICE_CHANGE_PERCLUDES_TS = 31

WIFI_REASON_UNSPECIFIED_QOS = 32

WIFI_REASON_NOT_ENOUGH_BANDWIDTH = 33

WIFI_REASON_MISSING_ACKS = 34

WIFI_REASON_EXCEEDED_TXOP = 35

WIFI_REASON_STA_LEAVING = 36

WIFI_REASON_END_BA = 37

WIFI_REASON_UNKNOWN_BA = 38

WIFI_REASON_TIMEOUT = 39

WIFI_REASON_PEER_INITIATED = 46

WIFI_REASON_AP_INITIATED = 47

WIFI_REASON_INVALID_FT_ACTION_FRAME_COUNT = 48

WIFI_REASON_INVALID_PMKID = 49

WIFI_REASON_INVALID_MDE = 50

WIFI_REASON_INVALID_FTE = 51

WIFI_REASON_TRANSMISSION_LINK_ESTABLISH_FAILED = 67

WIFI_REASON_ALTERATIVE_CHANNEL_OCCUPIED = 68

WIFI_REASON_BEACON_TIMEOUT = 200

WIFI_REASON_NO_AP_FOUND = 201

WIFI_REASON_AUTH_FAIL = 202

WIFI_REASON_ASSOC_FAIL = 203

WIFI_REASON_HANDSHAKE_TIMEOUT = 204

WIFI_REASON_CONNECTION_FAIL = 205

WIFI_REASON_AP_TSF_RESET = 206

WIFI_REASON_ROAMING = 207

WIFI_REASON_ASSOC_COMEBACK_TIME_TOO_LONG = 208

WIFI_REASON_SA_QUERY_TIMEOUT = 209

enum wifi_second_chan_t

Values:

WIFI_SECOND_CHAN_NONE = 0
the channel width is HT20

WIFI_SECOND_CHAN_ABOVE
the channel width is HT40 and the secondary channel is above the primary channel

WIFI_SECOND_CHAN_BELOW
the channel width is HT40 and the secondary channel is below the primary channel

enum wifi_scan_type_t

Values:

WIFI_SCAN_TYPE_ACTIVE = 0
active scan

WIFI_SCAN_TYPE_PASSIVE
passive scan

enum wifi_cipher_type_t

Values:

WIFI_CIPHER_TYPE_NONE = 0
the cipher type is none

WIFI_CIPHER_TYPE_WEP40
the cipher type is WEP40

WIFI_CIPHER_TYPE_WEP104
the cipher type is WEP104

WIFI_CIPHER_TYPE_TKIP
the cipher type is TKIP

WIFI_CIPHER_TYPE_CCMP
the cipher type is CCMP

WIFI_CIPHER_TYPE_TKIP_CCMP
the cipher type is TKIP and CCMP

WIFI_CIPHER_TYPE_AES_CMAC128
the cipher type is AES-CMAC-128

WIFI_CIPHER_TYPE_SMS4
the cipher type is SMS4

WIFI_CIPHER_TYPE_UNKNOWN
the cipher type is unknown

enum wifi_ant_t
WiFi antenna.

Values:

WIFI_ANT_ANT0
WiFi antenna 0

WIFI_ANT_ANT1
WiFi antenna 1

WIFI_ANT_MAX
Invalid WiFi antenna

enum wifi_scan_method_t
Values:

WIFI_FAST_SCAN = 0
Do fast scan, scan will end after find SSID match AP

WIFI_ALL_CHANNEL_SCAN
All channel scan, scan will end after scan all the channel

enum wifi_sort_method_t
Values:

WIFI_CONNECT_AP_BY_SIGNAL = 0
Sort match AP in scan list by RSSI

WIFI_CONNECT_AP_BY_SECURITY
Sort match AP in scan list by security mode

enum wifi_ps_type_t
Values:

WIFI_PS_NONE
No power save

WIFI_PS_MIN_MODEM
Minimum modem power saving. In this mode, station wakes up to receive beacon every DTIM period

WIFI_PS_MAX_MODEM
Maximum modem power saving. In this mode, interval to receive beacons is determined by the listen_interval parameter in *wifi_sta_config_t*

enum wifi_bandwidth_t

Values:

WIFI_BW_HT20 = 1

WIFI_BW_HT40

enum wifi_sae_pwe_method_t

Configuration for SAE PWE derivation

Values:

WPA3_SAE_PWE_UNSPECIFIED

WPA3_SAE_PWE_HUNT_AND_PECK

WPA3_SAE_PWE_HASH_TO_ELEMENT

WPA3_SAE_PWE_BOTH

enum wifi_storage_t

Values:

WIFI_STORAGE_FLASH

all configuration will store in both memory and flash

WIFI_STORAGE_RAM

all configuration will only store in the memory

enum wifi_vendor_ie_type_t

Vendor Information Element type.

Determines the frame type that the IE will be associated with.

Values:

WIFI_VND_IE_TYPE_BEACON

WIFI_VND_IE_TYPE_PROBE_REQ

WIFI_VND_IE_TYPE_PROBE_RESP

WIFI_VND_IE_TYPE_ASSOC_REQ

WIFI_VND_IE_TYPE_ASSOC_RESP

enum wifi_vendor_ie_id_t

Vendor Information Element index.

Each IE type can have up to two associated vendor ID elements.

Values:

WIFI_VND_IE_ID_0

WIFI_VND_IE_ID_1

enum wifi_promiscuous_pkt_type_t

Promiscuous frame type.

Passed to promiscuous mode RX callback to indicate the type of parameter in the buffer.

Values:

WIFI_PKT_MGMT

Management frame, indicates ‘buf’ argument is *wifi_promiscuous_pkt_t*

WIFI_PKT_CTRL

Control frame, indicates ‘buf’ argument is *wifi_promiscuous_pkt_t*

WIFI_PKT_DATA

Data frame, indiciates ‘buf’ argument is *wifi_promiscuous_pkt_t*

WIFI_PKT_MISC
Other type, such as MIMO etc. ‘buf’ argument is *wifi_promiscuous_pkt_t* but the payload is zero length.

enum wifi_ant_mode_t
WiFi antenna mode.

Values:

WIFI_ANT_MODE_ANT0
Enable WiFi antenna 0 only

WIFI_ANT_MODE_ANT1
Enable WiFi antenna 1 only

WIFI_ANT_MODE_AUTO
Enable WiFi antenna 0 and 1, automatically select an antenna

WIFI_ANT_MODE_MAX
Invalid WiFi enabled antenna

enum wifi_phy_rate_t
WiFi PHY rate encodings.

Values:

WIFI_PHY_RATE_1M_L = 0x00
1 Mbps with long preamble

WIFI_PHY_RATE_2M_L = 0x01
2 Mbps with long preamble

WIFI_PHY_RATE_5M_L = 0x02
5.5 Mbps with long preamble

WIFI_PHY_RATE_11M_L = 0x03
11 Mbps with long preamble

WIFI_PHY_RATE_2M_S = 0x05
2 Mbps with short preamble

WIFI_PHY_RATE_5M_S = 0x06
5.5 Mbps with short preamble

WIFI_PHY_RATE_11M_S = 0x07
11 Mbps with short preamble

WIFI_PHY_RATE_48M = 0x08
48 Mbps

WIFI_PHY_RATE_24M = 0x09
24 Mbps

WIFI_PHY_RATE_12M = 0x0A
12 Mbps

WIFI_PHY_RATE_6M = 0x0B
6 Mbps

WIFI_PHY_RATE_54M = 0x0C
54 Mbps

WIFI_PHY_RATE_36M = 0x0D
36 Mbps

WIFI_PHY_RATE_18M = 0x0E
18 Mbps

WIFI_PHY_RATE_9M = 0x0F
9 Mbps

WIFI_PHY_RATE_MCS0_LGI = 0x10
MCS0 with long GI, 6.5 Mbps for 20MHz, 13.5 Mbps for 40MHz

WIFI_PHY_RATE_MCS1_LGI = 0x11
MCS1 with long GI, 13 Mbps for 20MHz, 27 Mbps for 40MHz

WIFI_PHY_RATE_MCS2_LGI = 0x12
MCS2 with long GI, 19.5 Mbps for 20MHz, 40.5 Mbps for 40MHz

WIFI_PHY_RATE_MCS3_LGI = 0x13
MCS3 with long GI, 26 Mbps for 20MHz, 54 Mbps for 40MHz

WIFI_PHY_RATE_MCS4_LGI = 0x14
MCS4 with long GI, 39 Mbps for 20MHz, 81 Mbps for 40MHz

WIFI_PHY_RATE_MCS5_LGI = 0x15
MCS5 with long GI, 52 Mbps for 20MHz, 108 Mbps for 40MHz

WIFI_PHY_RATE_MCS6_LGI = 0x16
MCS6 with long GI, 58.5 Mbps for 20MHz, 121.5 Mbps for 40MHz

WIFI_PHY_RATE_MCS7_LGI = 0x17
MCS7 with long GI, 65 Mbps for 20MHz, 135 Mbps for 40MHz

WIFI_PHY_RATE_MCS0_SGI = 0x18
MCS0 with short GI, 7.2 Mbps for 20MHz, 15 Mbps for 40MHz

WIFI_PHY_RATE_MCS1_SGI = 0x19
MCS1 with short GI, 14.4 Mbps for 20MHz, 30 Mbps for 40MHz

WIFI_PHY_RATE_MCS2_SGI = 0x1A
MCS2 with short GI, 21.7 Mbps for 20MHz, 45 Mbps for 40MHz

WIFI_PHY_RATE_MCS3_SGI = 0x1B
MCS3 with short GI, 28.9 Mbps for 20MHz, 60 Mbps for 40MHz

WIFI_PHY_RATE_MCS4_SGI = 0x1C
MCS4 with short GI, 43.3 Mbps for 20MHz, 90 Mbps for 40MHz

WIFI_PHY_RATE_MCS5_SGI = 0x1D
MCS5 with short GI, 57.8 Mbps for 20MHz, 120 Mbps for 40MHz

WIFI_PHY_RATE_MCS6_SGI = 0x1E
MCS6 with short GI, 65 Mbps for 20MHz, 135 Mbps for 40MHz

WIFI_PHY_RATE_MCS7_SGI = 0x1F
MCS7 with short GI, 72.2 Mbps for 20MHz, 150 Mbps for 40MHz

WIFI_PHY_RATE_LORA_250K = 0x29
250 Kbps

WIFI_PHY_RATE_LORA_500K = 0x2A
500 Kbps

WIFI_PHY_RATE_MAX

enum wifi_event_t
WiFi event declarations

Values:

WIFI_EVENT_WIFI_READY = 0
ESP32 WiFi ready

WIFI_EVENT_SCAN_DONE
ESP32 finish scanning AP

WIFI_EVENT_STA_START
ESP32 station start

WIFI_EVENT_STA_STOP
ESP32 station stop

WIFI_EVENT_STA_CONNECTED
ESP32 station connected to AP

WIFI_EVENT_STA_DISCONNECTED
ESP32 station disconnected from AP

WIFI_EVENT_STA_AUTHMODE_CHANGE
the auth mode of AP connected by ESP32 station changed

WIFI_EVENT_STA_WPS_ER_SUCCESS
ESP32 station wps succeeds in enrollee mode

WIFI_EVENT_STA_WPS_ER_FAILED
ESP32 station wps fails in enrollee mode

WIFI_EVENT_STA_WPS_ER_TIMEOUT
ESP32 station wps timeout in enrollee mode

WIFI_EVENT_STA_WPS_ER_PIN
ESP32 station wps pin code in enrollee mode

WIFI_EVENT_STA_WPS_ER_PBC_OVERLAP
ESP32 station wps overlap in enrollee mode

WIFI_EVENT_AP_START
ESP32 soft-AP start

WIFI_EVENT_AP_STOP
ESP32 soft-AP stop

WIFI_EVENT_AP_STACONNECTED
a station connected to ESP32 soft-AP

WIFI_EVENT_AP_STADISCONNECTED
a station disconnected from ESP32 soft-AP

WIFI_EVENT_AP_PROBEREQRECVED
Receive probe request packet in soft-AP interface

WIFI_EVENT_FTM_REPORT
Receive report of FTM procedure

WIFI_EVENT_STA_BSS_RSSI_LOW
AP’ s RSSI crossed configured threshold

WIFI_EVENT_ACTION_TX_STATUS
Status indication of Action Tx operation

WIFI_EVENT_ROC_DONE
Remain-on-Channel operation complete

WIFI_EVENT_STA_BEACON_TIMEOUT
ESP32 station beacon timeout

WIFI_EVENT_MAX
Invalid WiFi event ID

enum wifi_event_sta_wps_fail_reason_t
Argument structure for WIFI_EVENT_STA_WPS_ER_FAILED event

Values:

WPS_FAIL_REASON_NORMAL = 0
ESP32 WPS normal fail reason

WPS_FAIL_REASON_RECV_M2D
ESP32 WPS receive M2D frame

WPS_FAIL_REASON_MAX

enum wifi_ftm_status_t
FTM operation status types.

Values:

FTM_STATUS_SUCCESS = 0
FTM exchange is successful

FTM_STATUS_UNSUPPORTED
Peer does not support FTM

FTM_STATUS_CONF_REJECTED
Peer rejected FTM configuration in FTM Request

FTM_STATUS_NO_RESPONSE
Peer did not respond to FTM Requests

FTM_STATUS_FAIL
Unknown error during FTM exchange

SmartConfig

The SmartConfig™ is a provisioning technology developed by TI to connect a new Wi-Fi device to a Wi-Fi network. It uses a mobile app to broadcast the network credentials from a smartphone, or a tablet, to an un-provisioned Wi-Fi device.

The advantage of this technology is that the device does not need to directly know SSID or password of an Access Point (AP). This information is provided using the smartphone. This is particularly important to headless device and systems, due to their lack of a user interface.

If you are looking for other options to provision your ESP32 devices, check 配网 *API*.

Application Example Connect ESP32 to target AP using SmartConfig: wifi/smart_config.

API Reference

Header File

- esp_wifi/include/esp_smartconfig.h

Functions

const char ***esp_smartconfig_get_version**(void)
Get the version of SmartConfig.

Return
- SmartConfig version const char.

esp_err_t **esp_smartconfig_start**(**const** *smartconfig_start_config_t* **config*)
Start SmartConfig, config ESP device to connect AP. You need to broadcast information by phone APP. Device sniffer special packets from the air that containing SSID and password of target AP.

Attention 1. This API can be called in station or softAP-station mode.
Attention 2. Can not call esp_smartconfig_start twice before it finish, please call esp_smartconfig_stop first.
Return
- ESP_OK: succeed
- others: fail

Parameters
- `config`: pointer to smartconfig start configure structure

esp_err_t **esp_smartconfig_stop**(void)
Stop SmartConfig, free the buffer taken by esp_smartconfig_start.

Attention Whether connect to AP succeed or not, this API should be called to free memory taken by smartconfig_start.

Return
- ESP_OK: succeed
- others: fail

esp_err_t **esp_esptouch_set_timeout**(uint8_t *time_s*)
Set timeout of SmartConfig process.

Attention Timing starts from SC_STATUS_FIND_CHANNEL status. SmartConfig will restart if timeout.

Return
- ESP_OK: succeed
- others: fail

Parameters
- `time_s`: range 15s~255s, offset:45s.

esp_err_t **esp_smartconfig_set_type**(*smartconfig_type_t type*)
Set protocol type of SmartConfig.

Attention If users need to set the SmartConfig type, please set it before calling esp_smartconfig_start.

Return
- ESP_OK: succeed
- others: fail

Parameters
- `type`: Choose from the smartconfig_type_t.

esp_err_t **esp_smartconfig_fast_mode**(bool *enable*)
Set mode of SmartConfig. default normal mode.

Attention 1. Please call it before API esp_smartconfig_start.
Attention 2. Fast mode have corresponding APP(phone).
Attention 3. Two mode is compatible.

Return
- ESP_OK: succeed
- others: fail

Parameters
- `enable`: false-disable(default); true-enable;

esp_err_t **esp_smartconfig_get_rvd_data**(uint8_t **rvd_data*, uint8_t *len*)
Get reserved data of ESPTouch v2.

Return
- ESP_OK: succeed
- others: fail

Parameters
- `rvd_data`: reserved data
- `len`: length of reserved data

Structures

struct smartconfig_event_got_ssid_pswd_t
Argument structure for SC_EVENT_GOT_SSID_PSWD event

Public Members

uint8_t **ssid**[32]
SSID of the AP. Null terminated string.

uint8_t **password**[64]
Password of the AP. Null terminated string.

bool **bssid_set**
whether set MAC address of target AP or not.

uint8_t **bssid**[6]
MAC address of target AP.

smartconfig_type_t **type**
Type of smartconfig(ESPTouch or AirKiss).

uint8_t **token**
Token from cellphone which is used to send ACK to cellphone.

uint8_t **cellphone_ip**[4]
IP address of cellphone.

struct smartconfig_start_config_t
Configure structure for esp_smartconfig_start

Public Members

bool **enable_log**
Enable smartconfig logs.

bool **esp_touch_v2_enable_crypt**
Enable ESPTouch v2 crypt.

char ***esp_touch_v2_key**
ESPTouch v2 crypt key, len should be 16.

Macros

SMARTCONFIG_START_CONFIG_DEFAULT()

Enumerations

enum smartconfig_type_t
Values:

SC_TYPE_ESPTOUCH = 0
protocol: ESPTouch

SC_TYPE_AIRKISS
protocol: AirKiss

SC_TYPE_ESPTOUCH_AIRKISS
protocol: ESPTouch and AirKiss

SC_TYPE_ESPTOUCH_V2
protocol: ESPTouch v2

enum smartconfig_event_t
Smartconfig event declarations

Values:

SC_EVENT_SCAN_DONE
ESP32 station smartconfig has finished to scan for APs

SC_EVENT_FOUND_CHANNEL
ESP32 station smartconfig has found the channel of the target AP

SC_EVENT_GOT_SSID_PSWD
ESP32 station smartconfig got the SSID and password

SC_EVENT_SEND_ACK_DONE
ESP32 station smartconfig has sent ACK to cellphone

ESP-NOW

概述 ESP-NOW 是一种由乐鑫公司定义的无连接 Wi-Fi 通信协议。在 ESP-NOW 中，应用程序数据被封装在各个供应商的动作帧中，然后在无连接的情况下，从一个 Wi-Fi 设备传输到另一个 Wi-Fi 设备。CTR 与 CBC-MAC 协议 (CCMP) 可用来保护动作帧的安全。ESP-NOW 广泛应用于智能照明、远程控制、传感器等领域。

帧格式 ESP-NOW 使用各个供应商的动作帧传输数据，默认比特率为 1 Mbps。各个供应商的动作帧格式为：

MAC 报头	分类代码	组织标识符	随机值	供应商特定内容	FCS
24 字节	1 字节	3 字节	4 字节	7~257 字节	4 字节

- 分类代码：分类代码字段可用于指示各个供应商的类别（比如 127）。
- 组织标识符：组织标识符包含一个唯一标识符 (比如 0x18fe34)，为乐鑫指定的 MAC 地址的前三个字节。
- 随机值：防止重放攻击。
- 供应商特定内容：供应商特定内容包含供应商特定字段，如下所示：

元素 ID	长度	组织标识符	类型	版本	正文
1 字节	1 字节	3 字节	1 字节	1 字节	0 ~ 250 字节

- 元素 ID：元素 ID 字段可用于指示特定于供应商的元素。
- 长度：长度是组织标识符、类型、版本和正文的总长度。
- 组织标识符：组织标识符包含一个唯一标识符 (比如 0x18fe34)，为乐鑫指定的 MAC 地址的前三个字节。
- 类型：类型字段设置为 4，代表 ESP-NOW。
- 版本：版本字段设置为 ESP-NOW 的版本。
- 正文：正文包含 ESP-NOW 数据。

由于 ESP-NOW 是无连接的，因此 MAC 报头与标准帧略有不同。FrameControl 字段的 FromDS 和 ToDS 位均为 0。第一个地址字段用于配置目标地址。第二个地址字段用于配置源地址。第三个地址字段用于配置广播地址 (0xff:0xff:0xff:0xff:0xff:0xff)。

安全

ESP-NOW 采用 CCMP 方法保护供应商特定动作帧的安全，具体可参考 IEEE Std. 802.11-2012。Wi-Fi 设备维护一个初始

- PMK 可使用 AES-128 算法加密 LMK。请调用*esp_now_set_pmk()* 设置 PMK。如果未设置 PMK，将使用默认 PMK。
- LMK 可通过 CCMP 方法对供应商特定的动作帧进行加密，最多拥有 6 个不同的 LMK。如果未设置配对设备的 LMK，则动作帧不进行加密。

目前，不支持加密组播供应商特定的动作帧。

初始化和反初始化 调用*esp_now_init()* 初始化 ESP-NOW，调用*esp_now_deinit()* 反初始化 ESP-NOW。ESP-NOW 数据必须在 Wi-Fi 启动后传输，因此建议在初始化 ESP-NOW 之前启动 Wi-Fi，并在反初始化 ESP-NOW 之后停止 Wi-Fi。当调用*esp_now_deinit()* 时，配对设备的所有信息都将被删除。

添加配对设备 在将数据发送到其他设备之前，请先调用`esp_now_add_peer()`将其添加到配对设备列表中。如果启用了加密，则必须设置 LMK。ESP-NOW 数据可以从 Station 或 Softap 接口发送。确保在发送 ESP-NOW 数据之前已启用该接口。

配对设备的最大数量是 20，其中加密设备的数量不超过 16，默认值是 6。

在发送广播数据之前必须添加具有广播 MAC 地址的设备。配对设备的信道范围是从 0 ~ 14。如果信道设置为 0，数据将在当前信道上发送。否则，必须使用本地设备所在的通道。

发送 ESP-NOW 数据 调用`esp_now_send()`发送 ESP-NOW 数据，调用`esp_now_register_send_cb()`注册发送回调函数。如果 MAC 层成功接收到数据，则该函数将返回 *ESP_NOW_SEND_SUCCESS* 事件。否则，它将返回 *ESP_NOW_SEND_FAIL*。ESP-NOW 数据发送失败可能有几种原因，比如目标设备不存在、设备的信道不相同、动作帧在传输过程中丢失等。应用层并不一定可以总能接收到数据。如果需要，应用层可在接收 ESP-NOW 数据时发回一个应答 (ACK) 数据。如果接收 ACK 数据超时，则将重新传输 ESP-NOW 数据。可以为 ESP-NOW 数据设置序列号，从而删除重复的数据。

如果有大量 ESP-NOW 数据要发送，则调用`esp_now_send()`一次性发送不大于 250 字节的数据。请注意，两个 ESP-NOW 数据包的发送间隔太短可能导致回调函数返回混乱。因此，建议在等到上一次回调函数返回 ACK 后再发送下一个 ESP-NOW 数据。发送回调函数从高优先级的 Wi-Fi 任务中运行。因此，不要在回调函数中执行冗长的操作。相反，将必要的数据发布到队列，并交给优先级较低的任务处理。

接收 ESP-NOW 数据 调用`esp_now_register_recv_cb()`注册接收回调函数。当接收 ESP-NOW 数据时，需要调用接收回调函数。接收回调函数也在 Wi-Fi 任务任务中运行。因此，不要在回调函数中执行冗长的操作。相反，将必要的数据发布到队列，并交给优先级较低的任务处理。

配置 ESP-NOW 速率 调用`esp_wifi_config_espnow_rate()`配置指定接口的 ESPNOW 速率。确保在配置速率之前使能接口。这个 API 应该在`esp_wifi_start()`之后调用。

API 参考

Header File

- esp_wifi/include/esp_now.h

Functions

esp_err_t **esp_now_init**(void)

Initialize ESPNOW function.

Return

- ESP_OK : succeed
- ESP_ERR_ESPNOW_INTERNAL : Internal error

esp_err_t **esp_now_deinit**(void)

De-initialize ESPNOW function.

Return

- ESP_OK : succeed

esp_err_t **esp_now_get_version**(uint32_t **version*)

Get the version of ESPNOW.

Return

- ESP_OK : succeed
- ESP_ERR_ESPNOW_ARG : invalid argument

Parameters

- `version`: ESPNOW version

esp_err_t **esp_now_register_recv_cb**(*esp_now_recv_cb_t cb*)
Register callback function of receiving ESPNOW data.

Return
- ESP_OK : succeed
- ESP_ERR_ESPNOW_NOT_INIT : ESPNOW is not initialized
- ESP_ERR_ESPNOW_INTERNAL : internal error

Parameters
- `cb`: callback function of receiving ESPNOW data

esp_err_t **esp_now_unregister_recv_cb**(void)
Unregister callback function of receiving ESPNOW data.

Return
- ESP_OK : succeed
- ESP_ERR_ESPNOW_NOT_INIT : ESPNOW is not initialized

esp_err_t **esp_now_register_send_cb**(*esp_now_send_cb_t cb*)
Register callback function of sending ESPNOW data.

Return
- ESP_OK : succeed
- ESP_ERR_ESPNOW_NOT_INIT : ESPNOW is not initialized
- ESP_ERR_ESPNOW_INTERNAL : internal error

Parameters
- `cb`: callback function of sending ESPNOW data

esp_err_t **esp_now_unregister_send_cb**(void)
Unregister callback function of sending ESPNOW data.

Return
- ESP_OK : succeed
- ESP_ERR_ESPNOW_NOT_INIT : ESPNOW is not initialized

esp_err_t **esp_now_send**(**const** uint8_t **peer_addr*, **const** uint8_t **data*, size_t *len*)
Send ESPNOW data.

Attention 1. If peer_addr is not NULL, send data to the peer whose MAC address matches peer_addr
Attention 2. If peer_addr is NULL, send data to all of the peers that are added to the peer list
Attention 3. The maximum length of data must be less than ESP_NOW_MAX_DATA_LEN
Attention 4. The buffer pointed to by data argument does not need to be valid after esp_now_send returns
Return
- ESP_OK : succeed
- ESP_ERR_ESPNOW_NOT_INIT : ESPNOW is not initialized
- ESP_ERR_ESPNOW_ARG : invalid argument
- ESP_ERR_ESPNOW_INTERNAL : internal error
- ESP_ERR_ESPNOW_NO_MEM : out of memory, when this happens, you can delay a while before sending the next data
- ESP_ERR_ESPNOW_NOT_FOUND : peer is not found
- ESP_ERR_ESPNOW_IF : current WiFi interface doesn’ t match that of peer

Parameters
- `peer_addr`: peer MAC address
- `data`: data to send
- `len`: length of data

esp_err_t **esp_now_add_peer**(**const** *esp_now_peer_info_t* **peer*)
Add a peer to peer list.

Return
- ESP_OK : succeed
- ESP_ERR_ESPNOW_NOT_INIT : ESPNOW is not initialized
- ESP_ERR_ESPNOW_ARG : invalid argument
- ESP_ERR_ESPNOW_FULL : peer list is full
- ESP_ERR_ESPNOW_NO_MEM : out of memory

- ESP_ERR_ESPNOW_EXIST : peer has existed

Parameters

- `peer`: peer information

esp_err_t **esp_now_del_peer**(**const** uint8_t *peer_addr)

Delete a peer from peer list.

Return

- ESP_OK : succeed
- ESP_ERR_ESPNOW_NOT_INIT : ESPNOW is not initialized
- ESP_ERR_ESPNOW_ARG : invalid argument
- ESP_ERR_ESPNOW_NOT_FOUND : peer is not found

Parameters

- `peer_addr`: peer MAC address

esp_err_t **esp_now_mod_peer**(**const** *esp_now_peer_info_t* *peer)

Modify a peer.

Return

- ESP_OK : succeed
- ESP_ERR_ESPNOW_NOT_INIT : ESPNOW is not initialized
- ESP_ERR_ESPNOW_ARG : invalid argument
- ESP_ERR_ESPNOW_FULL : peer list is full

Parameters

- `peer`: peer information

esp_err_t **esp_wifi_config_espnow_rate**(*wifi_interface_t ifx*, *wifi_phy_rate_t rate*)

Config ESPNOW rate of specified interface.

Attention 1. This API should be called after esp_wifi_start().

Return

- ESP_OK: succeed
- others: failed

Parameters

- `ifx`: Interface to be configured.
- `rate`: Phy rate to be configured.

esp_err_t **esp_now_get_peer**(**const** uint8_t *peer_addr, *esp_now_peer_info_t* *peer)

Get a peer whose MAC address matches peer_addr from peer list.

Return

- ESP_OK : succeed
- ESP_ERR_ESPNOW_NOT_INIT : ESPNOW is not initialized
- ESP_ERR_ESPNOW_ARG : invalid argument
- ESP_ERR_ESPNOW_NOT_FOUND : peer is not found

Parameters

- `peer_addr`: peer MAC address
- `peer`: peer information

esp_err_t **esp_now_fetch_peer**(bool *from_head*, *esp_now_peer_info_t* *peer)

Fetch a peer from peer list. Only return the peer which address is unicast, for the multicast/broadcast address, the function will ignore and try to find the next in the peer list.

Return

- ESP_OK : succeed
- ESP_ERR_ESPNOW_NOT_INIT : ESPNOW is not initialized
- ESP_ERR_ESPNOW_ARG : invalid argument
- ESP_ERR_ESPNOW_NOT_FOUND : peer is not found

Parameters

- `from_head`: fetch from head of list or not
- `peer`: peer information

bool **esp_now_is_peer_exist**(**const** uint8_t *peer_addr)

Peer exists or not.

Return

- true : peer exists
- false : peer not exists

Parameters

- `peer_addr`: peer MAC address

esp_err_t **esp_now_get_peer_num**(*esp_now_peer_num_t* **num*)

Get the number of peers.

Return

- ESP_OK : succeed
- ESP_ERR_ESPNOW_NOT_INIT : ESPNOW is not initialized
- ESP_ERR_ESPNOW_ARG : invalid argument

Parameters

- `num`: number of peers

esp_err_t **esp_now_set_pmk**(**const** uint8_t **pmk*)

Set the primary master key.

Attention 1. primary master key is used to encrypt local master key

Return

- ESP_OK : succeed
- ESP_ERR_ESPNOW_NOT_INIT : ESPNOW is not initialized
- ESP_ERR_ESPNOW_ARG : invalid argument

Parameters

- `pmk`: primary master key

esp_err_t **esp_now_set_wake_window**(uint16_t *window*)

Set esp_now wake window for sta_disconnected power management.

Attention 1. Only when ESP_WIFI_STA_DISCONNECTED_PM_ENABLE is enabled, this configuration could work

Attention 2. This configuration only work for station mode and disconnected status

Attention 3. If more than one module has configured its wake_window, chip would choose the largest one to stay waked

Attention 4. If the gap between interval and window is smaller than 5ms, the chip would keep waked all the time

Attention 5. If never configured wake_window, the chip would keep waked at disconnected once it uses esp_now

Return

- ESP_OK : succeed
- ESP_ERR_ESPNOW_NOT_INIT : ESPNOW is not initialized

Parameters

- `window`: how much microsecond would the chip keep waked each interval, vary from 0 to 65535

Structures

struct esp_now_peer_info

ESPNOW peer information parameters.

Public Members

uint8_t **peer_addr**[**ESP_NOW_ETH_ALEN**]

ESPNOW peer MAC address that is also the MAC address of station or softap

uint8_t **lmk**[**ESP_NOW_KEY_LEN**]

ESPNOW peer local master key that is used to encrypt data

uint8_t **channel**

Wi-Fi channel that peer uses to send/receive ESPNOW data. If the value is 0, use the current channel which station or softap is on. Otherwise, it must be set as the channel that station or softap is on.

wifi_interface_t **ifidx**
Wi-Fi interface that peer uses to send/receive ESPNOW data

bool **encrypt**
ESPNOW data that this peer sends/receives is encrypted or not

void ***priv**
ESPNOW peer private data

struct esp_now_peer_num
Number of ESPNOW peers which exist currently.

Public Members

int **total_num**
Total number of ESPNOW peers, maximum value is ESP_NOW_MAX_TOTAL_PEER_NUM

int **encrypt_num**
Number of encrypted ESPNOW peers, maximum value is ESP_NOW_MAX_ENCRYPT_PEER_NUM

Macros

ESP_ERR_ESPNOW_BASE
ESPNOW error number base.

ESP_ERR_ESPNOW_NOT_INIT
ESPNOW is not initialized.

ESP_ERR_ESPNOW_ARG
Invalid argument

ESP_ERR_ESPNOW_NO_MEM
Out of memory

ESP_ERR_ESPNOW_FULL
ESPNOW peer list is full

ESP_ERR_ESPNOW_NOT_FOUND
ESPNOW peer is not found

ESP_ERR_ESPNOW_INTERNAL
Internal error

ESP_ERR_ESPNOW_EXIST
ESPNOW peer has existed

ESP_ERR_ESPNOW_IF
Interface error

ESP_NOW_ETH_ALEN
Length of ESPNOW peer MAC address

ESP_NOW_KEY_LEN
Length of ESPNOW peer local master key

ESP_NOW_MAX_TOTAL_PEER_NUM
Maximum number of ESPNOW total peers

ESP_NOW_MAX_ENCRYPT_PEER_NUM
Maximum number of ESPNOW encrypted peers

ESP_NOW_MAX_DATA_LEN
Maximum length of ESPNOW data which is sent very time

Type Definitions

typedef struct *esp_now_peer_info* **esp_now_peer_info_t**

ESPNOW peer information parameters.

typedef struct *esp_now_peer_num* **esp_now_peer_num_t**

Number of ESPNOW peers which exist currently.

typedef void (***esp_now_recv_cb_t**)(**const** uint8_t *mac_addr, **const** uint8_t *data, int data_len)

Callback function of receiving ESPNOW data.

Parameters

- `mac_addr`: peer MAC address
- `data`: received data
- `data_len`: length of received data

typedef void (***esp_now_send_cb_t**)(**const** uint8_t *mac_addr, *esp_now_send_status_t* status)

Callback function of sending ESPNOW data.

Parameters

- `mac_addr`: peer MAC address
- `status`: status of sending ESPNOW data (succeed or fail)

Enumerations

enum esp_now_send_status_t

Status of sending ESPNOW data .

Values:

ESP_NOW_SEND_SUCCESS = 0

Send ESPNOW data successfully

ESP_NOW_SEND_FAIL

Send ESPNOW data fail

ESP-MESH 编程指南

这是 ESP-MESH 的编程指南，包括 API 参考和编码示例。本指南分为以下部分：

1. *ESP-MESH 编程模型*
2. *编写 ESP-MESH 应用程序*
3. *自组网*
4. *应用实例*
5. *API 参考*

有关 ESP-MESH 协议的文档，请见*ESP-MESH API 指南*。有关 ESP-MESH 开发框架的更多内容，请见 ESP-MESH 开发框架。

ESP-MESH 编程模型

软件栈 ESP-MESH 软件栈基于 Wi-Fi 驱动程序和 FreeRTOS 构建，某些情况下（如根节点）也会使用 LwIP 软件栈。下图展示了 ESP-MESH 软件栈。

系统事件 应用程序可通过 **ESP-MESH 事件**与 ESP-MESH 交互。由于 ESP-MESH 构建在 Wi-Fi 软件栈之上，因此也可以通过 **Wi-Fi 事件任务**与 Wi-Fi 驱动程序进行交互。下图展示了 ESP-MESH 应用程序中各种系统事件的接口。

mesh_event_id_t 定义了所有可能的 ESP-MESH 事件，并且可以指示父节点和子节点的连接或断开等事件。应用程序如需使用 ESP-MESH 事件，则必须通过*esp_event_handler_register()* 将 **Mesh 事件处理程序**注册在默认事件任务中。注册完成后，ESP-MESH 事件将包含与应用程序所有相关事件相关的处理程序。

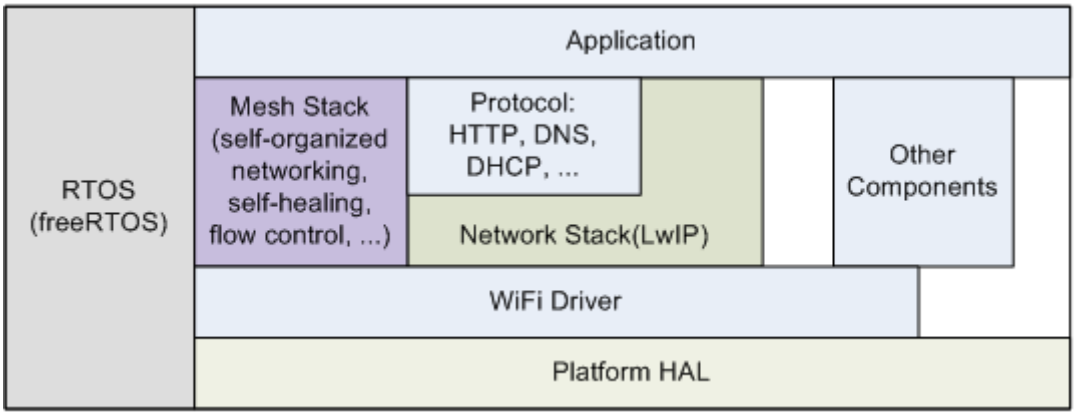

图 2: ESP-MESH 软件栈

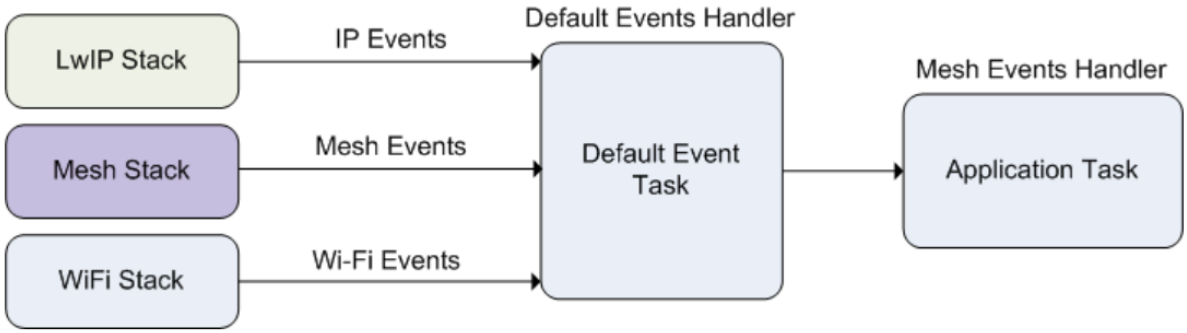

图 3: ESP-MESH 系统事件交付

Mesh 事件的典型应用场景包括：使用*MESH_EVENT_PARENT_CONNECTED*和*MESH_EVENT_CHILD_CONNECTED*事件来指示节点何时可以分别开始传输上行和下行的数据。同样，也可以使用 IP_EVENT_STA_GOT_IP 和 IP_EVENT_STA_LOST_IP 事件来指示根节点何时可以向外部 IP 网络传输数据。

警告：在自组网模式下使用 ESP-MESH 时，用户必须确保不得调用 Wi-Fi API。原因在于：自组网模式将在内部调用 Wi-Fi API 实现连接/断开/扫描等操作。**此时，如果外部应用程序调用 Wi-Fi API（包括来自回调函数和 Wi-Fi 事件处理程序的调用）都可能会干扰 ESP-MESH 的自组网行为**。因此，用户不应该在*esp_mesh_start()*和*esp_mesh_stop()*之间调用 Wi-Fi API。

LwIP & ESP-MESH 应用程序无需通过 LwIP 层便可直接访问 ESP-MESH 软件栈，LwIP 层仅在根节点和外部 IP 网络的数据发送与接收时会用到。但是，由于每个节点都有可能成为根节点（由于自动根节点选择机制的存在），每个节点仍必须初始化 LwIP 软件栈。

每个节点都需要通过调用 tcpip_adapter_init() **初始化 LwIP 软件栈**。为了防止非根节点访问 LwIP，应用程序应该在 LwIP 初始化完成后停止以下服务：

- SoftAP 接口上的 DHCP 服务器服务。
- Station 接口上的 DHCP 客户端服务。

下方代码片段展示如何为 ESP-MESH 应用程序进行 LwIP 初始化。

```
/*  tcpip 初始化 */
tcpip_adapter_init();
/*
* 对于 MESH
* 默认情况下，在 SoftAP 接口上停止 DHCP 服务器
```

(下页继续)

(续上页)

```
* 默认情况下，在 Station 接口上停止 DHCP 客户端
*/
ESP_ERROR_CHECK(tcpip_adapter_dhcps_stop(TCPIP_ADAPTER_IF_AP));
ESP_ERROR_CHECK(tcpip_adapter_dhcpc_stop(TCPIP_ADAPTER_IF_STA));
```

注解： ESP-MESH 的根节点必须与路由器连接。因此，当一个节点成为根节点时，**该节点对应的处理程序必须启动 DHCP 客户端服务并立即获取 IP 地址**。这样做将允许其他节点开始向/从外部 IP 网络发送/接收数据包。但是，如果使用静态 IP 设置，则不需要执行此步骤。

编写 ESP-MESH 应用程序 ESP-MESH 在正常启动前必须先初始化 LwIP 和 Wi-Fi 软件栈。下方代码展示了 ESP-MESH 在开始自身初始化前必须完成的步骤。

```
tcpip_adapter_init();
/*
* 对于 MESH
* 默认情况下，在 SoftAP 接口上停止 DHCP 服务器
* 默认情况下，在 Station 接口上停止 DHCP 客户端
*/
ESP_ERROR_CHECK(tcpip_adapter_dhcps_stop(TCPIP_ADAPTER_IF_AP));
ESP_ERROR_CHECK(tcpip_adapter_dhcpc_stop(TCPIP_ADAPTER_IF_STA));

/* 事件初始化 */
ESP_ERROR_CHECK(esp_event_loop_create_default());

/*Wi-Fi 初始化 */
wifi_init_config_t config = WIFI_INIT_CONFIG_DEFAULT();
ESP_ERROR_CHECK(esp_wifi_init(&config));
/* 注册 IP 事件处理程序 */
ESP_ERROR_CHECK(esp_event_handler_register(IP_EVENT, IP_EVENT_STA_GOT_IP, &ip_
↪event_handler, NULL));
ESP_ERROR_CHECK(esp_wifi_set_storage(WIFI_STORAGE_FLASH));
ESP_ERROR_CHECK(esp_wifi_start());
```

在完成 LwIP 和 Wi-Fi 的初始化后，需完成以下三个步骤以启动并运行 ESP-MESH。

1. *初始化 Mesh*
2. *配置 ESP-MESH 网络*
3. *启动 Mesh*

初始化 Mesh 下方代码片段展示如何初始化 ESP-MESH。

```
/*Mesh 初始化 */
ESP_ERROR_CHECK(esp_mesh_init());
/* 注册 mesh 事件处理程序 */
ESP_ERROR_CHECK(esp_event_handler_register(MESH_EVENT, ESP_EVENT_ANY_ID, &mesh_
↪event_handler, NULL));
```

配置 ESP-MESH 网络 ESP-MESH 可通过*esp_mesh_set_config()* 进行配置，并使用*mesh_cfg_t* 结构体传递参数。该结构体包含以下 ESP-MESH 的配置参数：

参数	描述
Channel（信道）	1 到 14 信道
Mesh ID	ESP-MESH 网络的 ID，见*mesh_addr_t*。
Router（路由器）	路由器配置，见*mesh_router_t*。
Mesh AP	Mesh AP 配置，见*mesh_ap_cfg_t*
Crypto Functions（加密函数）	Mesh IE 的加密函数，见 mesh_crypto_funcs_t。

下方代码片段展示如何配置 ESP-MESH。

```
/* 默认启用 MESH IE 加密 */
mesh_cfg_t cfg = MESH_INIT_CONFIG_DEFAULT();
/* Mesh ID */
memcpy((uint8_t *) &cfg.mesh_id, MESH_ID, 6);
/* 信道（需与路由器信道匹配）*/
cfg.channel = CONFIG_MESH_CHANNEL;
/* 路由器 */
cfg.router.ssid_len = strlen(CONFIG_MESH_ROUTER_SSID);
memcpy((uint8_t *) &cfg.router.ssid, CONFIG_MESH_ROUTER_SSID, cfg.router.ssid_len);
memcpy((uint8_t *) &cfg.router.password, CONFIG_MESH_ROUTER_PASSWD,
    strlen(CONFIG_MESH_ROUTER_PASSWD));
/* Mesh softAP */
cfg.mesh_ap.max_connection = CONFIG_MESH_AP_CONNECTIONS;
memcpy((uint8_t *) &cfg.mesh_ap.password, CONFIG_MESH_AP_PASSWD,
    strlen(CONFIG_MESH_AP_PASSWD));
ESP_ERROR_CHECK(esp_mesh_set_config(&cfg));
```

启动 Mesh 下方代码片段展示如何启动 ESP-MESH。

```
/* 启动 Mesh */
ESP_ERROR_CHECK(esp_mesh_start());
```

启动 ESP-MESH 后，应用程序应检查 ESP-MESH 事件，以确定它是何时连接到网络的。连接后，应用程序可使用*esp_mesh_send()* 和*esp_mesh_recv()* 在 ESP-MESH 网络中发送、接收数据包。

自组网 自组网是 ESP-MESH 的功能之一，允许节点自动扫描/选择/连接/重新连接到其他节点和路由器。此功能允许 ESP-MESH 网络具有很高的自主性，可适应变化的动态网络拓扑结构和环境。启用自组网功能后，ESP-MESH 网络中的节点能够自主完成以下操作：

- 选择或选举根节点（见建立网络 中的 **自动根节点选择**）
- 选择首选的父节点（见建立网络 中的 **父节点选择**）
- 网络断开时自动重新连接（见管理网络 中的 **中间父节点失败**）

启用自组网功能后，ESP-MESH 软件栈将内部调用 Wi-Fi API。因此，**在启用自组网功能时，应用层不得调用 Wi-Fi API，否则会干扰 ESP-MESH 的工作**。

开关自组网 应用程序可以在运行时通过调用*esp_mesh_set_self_organized()* 函数，启用或禁用自组网功能。该函数具有以下两个参数：

- `bool enable` 指定启用或禁用自组网功能。
- `bool select_parent` 指定在启用自组网功能时是否应选择新的父节点。根据节点类型和节点当前状态，选择新的父节点具有不同的作用。在禁用自组网功能时，此参数不使用。

禁用自组网 下方代码片段展示了如何禁用自组网功能。

```
//禁用自组网
esp_mesh_set_self_organized(false, false);
```

ESP-MESH 将在禁用自组网时尝试维护节点的当前 Wi-Fi 状态。

- 如果节点先前已连接到其他节点，则将保持连接。
- 如果节点先前已断开连接并且正在扫描父节点或路由器，则将停止扫描。
- 如果节点以前尝试重新连接到父节点或路由器，则将停止重新连接。

启用自组网 ESP-MESH 将尝试在启用自组网时保持节点的当前 Wi-Fi 状态。但是，根据节点类型以及是否选择了新的父节点，节点的 Wi-Fi 状态可能会发生变化。下表显示了启用自组网的效果。

是否选择父节点	是否为根结点	作用
N	N	已连接到父节点的节点将保持连接。
		之前扫描父节点的节点将停止扫描。调用 *esp_mesh_connect()* 重新启动。
	Y	已连接到路由器的根节点将保持连接。
		从路由器断开的根结点需调用 *esp_mesh_connect()* 进行重连。
Y	N	没有父节点的节点将自动选择首选父节点并连接。
		已连接到父节点的节点将断开连接，重新选择首选父节点并进行重连。
	Y	根结点在连接至父节点前必须放弃“根结点”的角色。因此，根节点将断开与路由器和所有子节点的连接，选择首选父节点并进行连接。

下方代码片段展示了如何启用自组网功能。

```
//启用自组网，并选择一个新的父节点
esp_mesh_set_self_organized(true, true);

...

//启用自组网并手动重新连接
esp_mesh_set_self_organized(true, false);
esp_mesh_connect();
```

调用 Wi-Fi API 在有些情况下，应用程序可能希望在使用 ESP-MESH 期间调用 Wi-Fi API。例如，应用程序可能需要手动扫描邻近的接入点 (AP)。**但在应用程序调用任何 Wi-Fi API 之前，必须先禁用自组网**。否则，ESP-MESH 软件栈可能会同时调用 Wi-Fi API，进而影响应用程序的正常调用。

应用程序不应在 *esp_mesh_set_self_organized()* 之间调用 Wi-Fi API。下方代码片段展示了应用程序如何在 ESP-MESH 运行期间安全地调用 *esp_wifi_scan_start()*。

```
//禁用自组网
esp_mesh_set_self_organized(0, 0);

//停止任何正在进行的扫描
esp_wifi_scan_stop();
//手动启动扫描运行完成时自动停止
esp_wifi_scan_start();

//进程扫描结果

...

//如果仍为连接状态，则重新启用自组网
esp_mesh_set_self_organized(1, 0);

...

//如果不为根节点且未连接，则重新启用自组网
esp_mesh_set_self_organized(1, 1);

...
```

(下页继续)

(续上页)

```
//如果为根节点且未连接，则重新启用
esp_mesh_set_self_organized(1, 0);   //不选择新的父节点
esp_mesh_connect();                  //手动重新连接到路由器
```

应用实例 ESP-IDF 包含以下 ESP-MESH 示例项目：

内部通信示例 展示了如何搭建 ESP-MESH 网络，并让根节点向网络中的每个节点发送数据包。

手动连网示例 展示了如何在禁用自组网功能的情况下使用 ESP-MESH。此示例展示了如何对节点进行编程，以手动扫描潜在父节点的列表，并根据自定义标准选择父节点。

API 参考

Header File

- esp_wifi/include/esp_mesh.h

Functions

esp_err_t **esp_mesh_init**(void)

Mesh initialization.

- Check whether Wi-Fi is started.
- Initialize mesh global variables with default values.

Attention This API shall be called after Wi-Fi is started.

Return

- ESP_OK
- ESP_FAIL

esp_err_t **esp_mesh_deinit**(void)

Mesh de-initialization.

- Release resources and stop the mesh

Return

- ESP_OK
- ESP_FAIL

esp_err_t **esp_mesh_start**(void)

Start mesh.

- Initialize mesh IE.
- Start mesh network management service.
- Create TX and RX queues according to the configuration.
- Register mesh packets receive callback.

Attention This API shall be called after mesh initialization and configuration.

Return

- ESP_OK
- ESP_FAIL
- ESP_ERR_MESH_NOT_INIT
- ESP_ERR_MESH_NOT_CONFIG
- ESP_ERR_MESH_NO_MEMORY

esp_err_t **esp_mesh_stop**(void)

Stop mesh.

- Deinitialize mesh IE.
- Disconnect with current parent.
- Disassociate all currently associated children.

- Stop mesh network management service.
- Unregister mesh packets receive callback.
- Delete TX and RX queues.
- Release resources.
- Restore Wi-Fi softAP to default settings if Wi-Fi dual mode is enabled.
- Set Wi-Fi Power Save type to WIFI_PS_NONE.

Return

- ESP_OK
- ESP_FAIL

esp_err_t **esp_mesh_send**(**const** *mesh_addr_t* *to, **const** *mesh_data_t* *data, int *flag*, **const** *mesh_opt_t* *opt*[], int *opt_count*)

Send a packet over the mesh network.

- Send a packet to any device in the mesh network.
- Send a packet to external IP network.

Attention This API is not reentrant.

Return

- ESP_OK
- ESP_FAIL
- ESP_ERR_MESH_ARGUMENT
- ESP_ERR_MESH_NOT_START
- ESP_ERR_MESH_DISCONNECTED
- ESP_ERR_MESH_OPT_UNKNOWN
- ESP_ERR_MESH_EXCEED_MTU
- ESP_ERR_MESH_NO_MEMORY
- ESP_ERR_MESH_TIMEOUT
- ESP_ERR_MESH_QUEUE_FULL
- ESP_ERR_MESH_NO_ROUTE_FOUND
- ESP_ERR_MESH_DISCARD

Parameters

- `[in] to`: the address of the final destination of the packet
  - If the packet is to the root, set this parameter to NULL.
  - If the packet is to an external IP network, set this parameter to the IPv4:PORT combination. This packet will be delivered to the root firstly, then the root will forward this packet to the final IP server address.
- `[in] data`: pointer to a sending mesh packet
  - Field size should not exceed MESH_MPS. Note that the size of one mesh packet should not exceed MESH_MTU.
  - Field proto should be set to data protocol in use (default is MESH_PROTO_BIN for binary).
  - Field tos should be set to transmission tos (type of service) in use (default is MESH_TOS_P2P for point-to-point reliable).
- `[in] flag`: bitmap for data sent
  - Speed up the route search
    * If the packet is to the root and "to" parameter is NULL, set this parameter to 0.
    * If the packet is to an internal device, MESH_DATA_P2P should be set.
    * If the packet is to the root ("to" parameter isn' t NULL) or to external IP network, MESH_DATA_TODS should be set.
    * If the packet is from the root to an internal device, MESH_DATA_FROMDS should be set.
  - Specify whether this API is block or non-block, block by default
    * If needs non-blocking, MESH_DATA_NONBLOCK should be set. Otherwise, may use esp_mesh_send_block_time() to specify a blocking time.
  - In the situation of the root change, MESH_DATA_DROP identifies this packet can be dropped by the new root for upstream data to external IP network, we try our best to avoid data loss caused by the root change, but there is a risk that the new root is running out of memory because most of memory is occupied by the pending data which isn' t read out in time by esp_mesh_recv_toDS(). Generally, we suggest esp_mesh_recv_toDS() is called after a connection with IP network is created. Thus data outgoing to external IP network via socket is just from reading

esp_mesh_recv_toDS() which avoids unnecessary memory copy.

- `[in] opt`: options
  - In case of sending a packet to a certain group, MESH_OPT_SEND_GROUP is a good choice. In this option, the value field should be set to the target receiver addresses in this group.
  - Root sends a packet to an internal device, this packet is from external IP network in case the receiver device responds this packet, MESH_OPT_RECV_DS_ADDR is required to attach the target DS address.
- `[in] opt_count`: option count
  - Currently, this API only takes one option, so opt_count is only supported to be 1.

esp_err_t **esp_mesh_send_block_time**(uint32_t *time_ms*)

Set blocking time of esp_mesh_send()

Attention This API shall be called before mesh is started.

Return

- ESP_OK

Parameters

- `[in] time_ms`: blocking time of esp_mesh_send(), unit:ms

esp_err_t **esp_mesh_recv**(*mesh_addr_t* **from*, *mesh_data_t* **data*, int *timeout_ms*, int **flag*, *mesh_opt_t* *opt*[], int *opt_count*)

Receive a packet targeted to self over the mesh network.

flag could be MESH_DATA_FROMDS or MESH_DATA_TODS.

Attention Mesh RX queue should be checked regularly to avoid running out of memory.

- Use esp_mesh_get_rx_pending() to check the number of packets available in the queue waiting to be received by applications.

Return

- ESP_OK
- ESP_ERR_MESH_ARGUMENT
- ESP_ERR_MESH_NOT_START
- ESP_ERR_MESH_TIMEOUT
- ESP_ERR_MESH_DISCARD

Parameters

- `[out] from`: the address of the original source of the packet
- `[out] data`: pointer to the received mesh packet
  - Field proto is the data protocol in use. Should follow it to parse the received data.
  - Field tos is the transmission tos (type of service) in use.
- `[in] timeout_ms`: wait time if a packet isn't immediately available (0:no wait, portMAX_DELAY:wait forever)
- `[out] flag`: bitmap for data received
  - MESH_DATA_FROMDS represents data from external IP network
  - MESH_DATA_TODS represents data directed upward within the mesh network

Parameters

- `[out] opt`: options desired to receive
  - MESH_OPT_RECV_DS_ADDR attaches the DS address
- `[in] opt_count`: option count desired to receive
  - Currently, this API only takes one option, so opt_count is only supported to be 1.

esp_err_t **esp_mesh_recv_toDS**(*mesh_addr_t* **from*, *mesh_addr_t* **to*, *mesh_data_t* **data*, int *timeout_ms*, int **flag*, *mesh_opt_t* *opt*[], int *opt_count*)

Receive a packet targeted to external IP network.

- Root uses this API to receive packets destined to external IP network
- Root forwards the received packets to the final destination via socket.
- If no socket connection is ready to send out the received packets and this esp_mesh_recv_toDS() hasn't been called by applications, packets from the whole mesh network will be pending in toDS queue.

Use esp_mesh_get_rx_pending() to check the number of packets available in the queue waiting to be received by applications in case of running out of memory in the root.

Using esp_mesh_set_xon_qsize() users may configure the RX queue size, default:32. If this size is too large,

and esp_mesh_recv_toDS() isn't called in time, there is a risk that a great deal of memory is occupied by the pending packets. If this size is too small, it will impact the efficiency on upstream. How to decide this value depends on the specific application scenarios.

flag could be MESH_DATA_TODS.

Attention This API is only called by the root.

Return

- ESP_OK
- ESP_ERR_MESH_ARGUMENT
- ESP_ERR_MESH_NOT_START
- ESP_ERR_MESH_TIMEOUT
- ESP_ERR_MESH_DISCARD
- ESP_ERR_MESH_RECV_RELEASE

Parameters

- `[out] from`: the address of the original source of the packet
- `[out] to`: the address contains remote IP address and port (IPv4:PORT)
- `[out] data`: pointer to the received packet
  - Contain the protocol and applications should follow it to parse the data.
- `[in] timeout_ms`: wait time if a packet isn't immediately available (0:no wait, portMAX_DELAY:wait forever)
- `[out] flag`: bitmap for data received
  - MESH_DATA_TODS represents the received data target to external IP network. Root shall forward this data to external IP network via the association with router.

Parameters

- `[out] opt`: options desired to receive
- `[in] opt_count`: option count desired to receive

esp_err_t **esp_mesh_set_config**(**const** *mesh_cfg_t* **config*)

Set mesh stack configuration.

- Use MESH_INIT_CONFIG_DEFAULT() to initialize the default values, mesh IE is encrypted by default.
- Mesh network is established on a fixed channel (1-14).
- Mesh event callback is mandatory.
- Mesh ID is an identifier of an MBSS. Nodes with the same mesh ID can communicate with each other.
- Regarding to the router configuration, if the router is hidden, BSSID field is mandatory.

If BSSID field isn't set and there exists more than one router with same SSID, there is a risk that more roots than one connected with different BSSID will appear. It means more than one mesh network is established with the same mesh ID.

Root conflict function could eliminate redundant roots connected with the same BSSID, but couldn't handle roots connected with different BSSID. Because users might have such requirements of setting up routers with same SSID for the future replacement. But in that case, if the above situations happen, please make sure applications implement forward functions on the root to guarantee devices in different mesh networks can communicate with each other. max_connection of mesh softAP is limited by the max number of Wi-Fi softAP supported (max:10).

Attention This API shall be called before mesh is started after mesh is initialized.

Return

- ESP_OK
- ESP_ERR_MESH_ARGUMENT
- ESP_ERR_MESH_NOT_ALLOWED

Parameters

- `[in] config`: pointer to mesh stack configuration

esp_err_t **esp_mesh_get_config**(*mesh_cfg_t* **config*)

Get mesh stack configuration.

Return

- ESP_OK
- ESP_ERR_MESH_ARGUMENT

Parameters
- `[out] config`: pointer to mesh stack configuration

esp_err_t **esp_mesh_set_router**(**const** *mesh_router_t* **router*)
Get router configuration.

Attention This API is used to dynamically modify the router configuration after mesh is configured.
Return
- ESP_OK
- ESP_ERR_MESH_ARGUMENT

Parameters
- `[in] router`: pointer to router configuration

esp_err_t **esp_mesh_get_router**(*mesh_router_t* **router*)
Get router configuration.

Return
- ESP_OK
- ESP_ERR_MESH_ARGUMENT

Parameters
- `[out] router`: pointer to router configuration

esp_err_t **esp_mesh_set_id**(**const** *mesh_addr_t* **id*)
Set mesh network ID.

Attention This API is used to dynamically modify the mesh network ID.
Return
- ESP_OK
- ESP_ERR_MESH_ARGUMENT: invalid argument

Parameters
- `[in] id`: pointer to mesh network ID

esp_err_t **esp_mesh_get_id**(*mesh_addr_t* **id*)
Get mesh network ID.

Return
- ESP_OK
- ESP_ERR_MESH_ARGUMENT

Parameters
- `[out] id`: pointer to mesh network ID

esp_err_t **esp_mesh_set_type**(*mesh_type_t type*)
Designate device type over the mesh network.

- MESH_IDLE: designates a device as a self-organized node for a mesh network
- MESH_ROOT: designates the root node for a mesh network
- MESH_LEAF: designates a device as a standalone Wi-Fi station that connects to a parent
- MESH_STA: designates a device as a standalone Wi-Fi station that connects to a router

Return
- ESP_OK
- ESP_ERR_MESH_NOT_ALLOWED

Parameters
- `[in] type`: device type

mesh_type_t **esp_mesh_get_type**(void)
Get device type over mesh network.

Attention This API shall be called after having received the event MESH_EVENT_PARENT_CONNECTED.
Return mesh type

esp_err_t **esp_mesh_set_max_layer**(int *max_layer*)
Set network max layer value.

- for tree topology, the max is 25.

- for chain topology, the max is 1000.
- Network max layer limits the max hop count.

Attention This API shall be called before mesh is started.
Return
- ESP_OK
- ESP_ERR_MESH_ARGUMENT
- ESP_ERR_MESH_NOT_ALLOWED

Parameters
- `[in] max_layer`: max layer value

int **esp_mesh_get_max_layer**(void)
Get max layer value.

Return max layer value

esp_err_t **esp_mesh_set_ap_password**(**const** uint8_t **pwd*, int *len*)
Set mesh softAP password.

Attention This API shall be called before mesh is started.
Return
- ESP_OK
- ESP_ERR_MESH_ARGUMENT
- ESP_ERR_MESH_NOT_ALLOWED

Parameters
- `[in] pwd`: pointer to the password
- `[in] len`: password length

esp_err_t **esp_mesh_set_ap_authmode**(*wifi_auth_mode_t authmode*)
Set mesh softAP authentication mode.

Attention This API shall be called before mesh is started.
Return
- ESP_OK
- ESP_ERR_MESH_ARGUMENT
- ESP_ERR_MESH_NOT_ALLOWED

Parameters
- `[in] authmode`: authentication mode

wifi_auth_mode_t **esp_mesh_get_ap_authmode**(void)
Get mesh softAP authentication mode.

Return authentication mode

esp_err_t **esp_mesh_set_ap_connections**(int *connections*)
Set mesh max connection value.

- Set mesh softAP max connection = mesh max connection + non-mesh max connection

Attention This API shall be called before mesh is started.
Return
- ESP_OK
- ESP_ERR_MESH_ARGUMENT

Parameters
- `[in] connections`: the number of max connections

int **esp_mesh_get_ap_connections**(void)
Get mesh max connection configuration.

Return the number of mesh max connections

int **esp_mesh_get_non_mesh_connections**(void)
Get non-mesh max connection configuration.

Return the number of non-mesh max connections

int **esp_mesh_get_layer**(void)
Get current layer value over the mesh network.

Attention This API shall be called after having received the event MESH_EVENT_PARENT_CONNECTED.
Return layer value

esp_err_t **esp_mesh_get_parent_bssid**(*mesh_addr_t* **bssid*)
Get the parent BSSID.

Attention This API shall be called after having received the event MESH_EVENT_PARENT_CONNECTED.
Return
- ESP_OK
- ESP_FAIL

Parameters
- `[out] bssid`: pointer to parent BSSID

bool **esp_mesh_is_root**(void)
Return whether the device is the root node of the network.

Return true/false

esp_err_t **esp_mesh_set_self_organized**(bool *enable*, bool *select_parent*)
Enable/disable self-organized networking.

- Self-organized networking has three main functions: select the root node; find a preferred parent; initiate reconnection if a disconnection is detected.
- Self-organized networking is enabled by default.
- If self-organized is disabled, users should set a parent for the device via esp_mesh_set_parent().

Attention This API is used to dynamically modify whether to enable the self organizing.
Return
- ESP_OK
- ESP_FAIL

Parameters
- `[in] enable`: enable or disable self-organized networking
- `[in] select_parent`: Only valid when self-organized networking is enabled.
  - if select_parent is set to true, the root will give up its mesh root status and search for a new parent like other non-root devices.

bool **esp_mesh_get_self_organized**(void)
Return whether enable self-organized networking or not.

Return true/false

esp_err_t **esp_mesh_waive_root**(**const** *mesh_vote_t* **vote*, int *reason*)
Cause the root device to give up (waive) its mesh root status.

- A device is elected root primarily based on RSSI from the external router.
- If external router conditions change, users can call this API to perform a root switch.
- In this API, users could specify a desired root address to replace itself or specify an attempts value to ask current root to initiate a new round of voting. During the voting, a better root candidate would be expected to find to replace the current one.
- If no desired root candidate, the vote will try a specified number of attempts (at least 15). If no better root candidate is found, keep the current one. If a better candidate is found, the new better one will send a root switch request to the current root, current root will respond with a root switch acknowledgment.
- After that, the new candidate will connect to the router to be a new root, the previous root will disconnect with the router and choose another parent instead.

Root switch is completed with minimal disruption to the whole mesh network.

Attention This API is only called by the root.
Return
- ESP_OK

- ESP_ERR_MESH_QUEUE_FULL
- ESP_ERR_MESH_DISCARD
- ESP_FAIL

Parameters

- `[in] vote`: vote configuration
  - If this parameter is set NULL, the vote will perform the default 15 times.
  - Field percentage threshold is 0.9 by default.
  - Field is_rc_specified shall be false.
  - Field attempts shall be at least 15 times.
- `[in] reason`: only accept MESH_VOTE_REASON_ROOT_INITIATED for now

esp_err_t **esp_mesh_set_vote_percentage** (float *percentage*)

Set vote percentage threshold for approval of being a root (default:0.9)

- During the networking, only obtaining vote percentage reaches this threshold, the device could be a root.

Attention This API shall be called before mesh is started.

Return

- ESP_OK
- ESP_FAIL

Parameters

- `[in] percentage`: vote percentage threshold

float **esp_mesh_get_vote_percentage** (void)

Get vote percentage threshold for approval of being a root.

Return percentage threshold

esp_err_t **esp_mesh_set_ap_assoc_expire** (int *seconds*)

Set mesh softAP associate expired time (default:10 seconds)

- If mesh softAP hasn't received any data from an associated child within this time, mesh softAP will take this child inactive and disassociate it.
- If mesh softAP is encrypted, this value should be set a greater value, such as 30 seconds.

Return

- ESP_OK
- ESP_FAIL

Parameters

- `[in] seconds`: the expired time

int **esp_mesh_get_ap_assoc_expire** (void)

Get mesh softAP associate expired time.

Return seconds

int **esp_mesh_get_total_node_num** (void)

Get total number of devices in current network (including the root)

Attention The returned value might be incorrect when the network is changing.

Return total number of devices (including the root)

int **esp_mesh_get_routing_table_size** (void)

Get the number of devices in this device's sub-network (including self)

Return the number of devices over this device's sub-network (including self)

esp_err_t **esp_mesh_get_routing_table** (*mesh_addr_t* **mac*, int *len*, int **size*)

Get routing table of this device's sub-network (including itself)

Return

- ESP_OK
- ESP_ERR_MESH_ARGUMENT

Parameters

- `[out] mac`: pointer to routing table
- `[in] len`: routing table size(in bytes)

- `[out] size`: pointer to the number of devices in routing table (including itself)

esp_err_t **esp_mesh_post_toDS_state**(bool *reachable*)
Post the toDS state to the mesh stack.

Attention This API is only for the root.
Return
- ESP_OK
- ESP_FAIL

Parameters
- `[in] reachable`: this state represents whether the root is able to access external IP network

esp_err_t **esp_mesh_get_tx_pending**(*mesh_tx_pending_t* *pending)
Return the number of packets pending in the queue waiting to be sent by the mesh stack.

Return
- ESP_OK
- ESP_FAIL

Parameters
- `[out] pending`: pointer to the TX pending

esp_err_t **esp_mesh_get_rx_pending**(*mesh_rx_pending_t* *pending)
Return the number of packets available in the queue waiting to be received by applications.

Return
- ESP_OK
- ESP_FAIL

Parameters
- `[out] pending`: pointer to the RX pending

int **esp_mesh_available_txupQ_num**(**const** *mesh_addr_t* *addr, uint32_t *xseqno_in)
Return the number of packets could be accepted from the specified address.

Return the number of upQ for a certain address
Parameters
- `[in] addr`: self address or an associate children address
- `[out] xseqno_in`: sequence number of the last received packet from the specified address

esp_err_t **esp_mesh_set_xon_qsize**(int *qsize*)
Set the number of RX queue for the node, the average number of window allocated to one of its child node is: wnd = xon_qsize / (2 * max_connection + 1). However, the window of each child node is not strictly equal to the average value, it is affected by the traffic also.

Attention This API shall be called before mesh is started.
Return
- ESP_OK
- ESP_FAIL

Parameters
- `[in] qsize`: default:32 (min:16)

int **esp_mesh_get_xon_qsize**(void)
Get queue size.

Return the number of queue

esp_err_t **esp_mesh_allow_root_conflicts**(bool *allowed*)
Set whether allow more than one root existing in one network.

Return
- ESP_OK
- ESP_WIFI_ERR_NOT_INIT
- ESP_WIFI_ERR_NOT_START

Parameters
- `[in] allowed`: allow or not

bool **esp_mesh_is_root_conflicts_allowed**(void)
Check whether allow more than one root to exist in one network.

Return true/false

esp_err_t **esp_mesh_set_group_id**(**const** *mesh_addr_t* *addr, int *num*)
Set group ID addresses.

Return
- ESP_OK
- ESP_MESH_ERR_ARGUMENT

Parameters
- `[in] addr`: pointer to new group ID addresses
- `[in] num`: the number of group ID addresses

esp_err_t **esp_mesh_delete_group_id**(**const** *mesh_addr_t* *addr, int *num*)
Delete group ID addresses.

Return
- ESP_OK
- ESP_MESH_ERR_ARGUMENT

Parameters
- `[in] addr`: pointer to deleted group ID address
- `[in] num`: the number of group ID addresses

int **esp_mesh_get_group_num**(void)
Get the number of group ID addresses.

Return the number of group ID addresses

esp_err_t **esp_mesh_get_group_list**(*mesh_addr_t* *addr, int *num*)
Get group ID addresses.

Return
- ESP_OK
- ESP_MESH_ERR_ARGUMENT

Parameters
- `[out] addr`: pointer to group ID addresses
- `[in] num`: the number of group ID addresses

bool **esp_mesh_is_my_group**(**const** *mesh_addr_t* *addr)
Check whether the specified group address is my group.

Return true/false

esp_err_t **esp_mesh_set_capacity_num**(int *num*)
Set mesh network capacity (max:1000, default:300)

Attention This API shall be called before mesh is started.
Return
- ESP_OK
- ESP_ERR_MESH_NOT_ALLOWED
- ESP_MESH_ERR_ARGUMENT

Parameters
- `[in] num`: mesh network capacity

int **esp_mesh_get_capacity_num**(void)
Get mesh network capacity.

Return mesh network capacity

esp_err_t **esp_mesh_set_ie_crypto_funcs**(**const** mesh_crypto_funcs_t *crypto_funcs)
Set mesh IE crypto functions.

Attention This API can be called at any time after mesh is initialized.
Return
- ESP_OK

Parameters
- `[in] crypto_funcs`: crypto functions for mesh IE
  - If crypto_funcs is set to NULL, mesh IE is no longer encrypted.

esp_err_t **esp_mesh_set_ie_crypto_key**(**const** char **key*, int *len*)
Set mesh IE crypto key.

Attention This API can be called at any time after mesh is initialized.
Return
- ESP_OK
- ESP_MESH_ERR_ARGUMENT

Parameters
- `[in] key`: ASCII crypto key
- `[in] len`: length in bytes, range:8~64

esp_err_t **esp_mesh_get_ie_crypto_key**(char **key*, int *len*)
Get mesh IE crypto key.

Return
- ESP_OK
- ESP_MESH_ERR_ARGUMENT

Parameters
- `[out] key`: ASCII crypto key
- `[in] len`: length in bytes, range:8~64

esp_err_t **esp_mesh_set_root_healing_delay**(int *delay_ms*)
Set delay time before starting root healing.

Return
- ESP_OK

Parameters
- `[in] delay_ms`: delay time in milliseconds

int **esp_mesh_get_root_healing_delay**(void)
Get delay time before network starts root healing.

Return delay time in milliseconds

esp_err_t **esp_mesh_fix_root**(bool *enable*)
Enable network Fixed Root Setting.

- Enabling fixed root disables automatic election of the root node via voting.
- All devices in the network shall use the same Fixed Root Setting (enabled or disabled).
- If Fixed Root is enabled, users should make sure a root node is designated for the network.

Return
- ESP_OK

Parameters
- `[in] enable`: enable or not

bool **esp_mesh_is_root_fixed**(void)
Check whether network Fixed Root Setting is enabled.

- Enable/disable network Fixed Root Setting by API esp_mesh_fix_root().
- Network Fixed Root Setting also changes with the "flag" value in parent networking IE.

Return true/false

esp_err_t **esp_mesh_set_parent**(**const** *wifi_config_t* **parent*, **const** *mesh_addr_t* **parent_mesh_id*, *mesh_type_t* *my_type*, int *my_layer*)
Set a specified parent for the device.

Attention This API can be called at any time after mesh is configured.
Return
- ESP_OK
- ESP_ERR_ARGUMENT

- ESP_ERR_MESH_NOT_CONFIG

Parameters

- `[in] parent`: parent configuration, the SSID and the channel of the parent are mandatory.
  - If the BSSID is set, make sure that the SSID and BSSID represent the same parent, otherwise the device will never find this specified parent.
- `[in] parent_mesh_id`: parent mesh ID,
  - If this value is not set, the original mesh ID is used.
- `[in] my_type`: mesh type
  - MESH_STA is not supported.
  - If the parent set for the device is the same as the router in the network configuration, then my_type shall set MESH_ROOT and my_layer shall set MESH_ROOT_LAYER.
- `[in] my_layer`: mesh layer
  - my_layer of the device may change after joining the network.
  - If my_type is set MESH_NODE, my_layer shall be greater than MESH_ROOT_LAYER.
  - If my_type is set MESH_LEAF, the device becomes a standalone Wi-Fi station and no longer has the ability to extend the network.

esp_err_t **esp_mesh_scan_get_ap_ie_len**(int **len*)

Get mesh networking IE length of one AP.

Return

- ESP_OK
- ESP_ERR_WIFI_NOT_INIT
- ESP_ERR_WIFI_ARG
- ESP_ERR_WIFI_FAIL

Parameters

- `[out] len`: mesh networking IE length

esp_err_t **esp_mesh_scan_get_ap_record**(*wifi_ap_record_t* **ap_record*, void **buffer*)

Get AP record.

Attention Different from esp_wifi_scan_get_ap_records(), this API only gets one of APs scanned each time. See "manual_networking" example.

Return

- ESP_OK
- ESP_ERR_WIFI_NOT_INIT
- ESP_ERR_WIFI_ARG
- ESP_ERR_WIFI_FAIL

Parameters

- `[out] ap_record`: pointer to one AP record
- `[out] buffer`: pointer to the mesh networking IE of this AP

esp_err_t **esp_mesh_flush_upstream_packets**(void)

Flush upstream packets pending in to_parent queue and to_parent_p2p queue.

Return

- ESP_OK

esp_err_t **esp_mesh_get_subnet_nodes_num**(**const** *mesh_addr_t* **child_mac*, int **nodes_num*)

Get the number of nodes in the subnet of a specific child.

Return

- ESP_OK
- ESP_ERR_MESH_NOT_START
- ESP_ERR_MESH_ARGUMENT

Parameters

- `[in] child_mac`: an associated child address of this device
- `[out] nodes_num`: pointer to the number of nodes in the subnet of a specific child

esp_err_t **esp_mesh_get_subnet_nodes_list**(**const** *mesh_addr_t* **child_mac*, *mesh_addr_t* **nodes*, int *nodes_num*)

Get nodes in the subnet of a specific child.

Return
- ESP_OK
- ESP_ERR_MESH_NOT_START
- ESP_ERR_MESH_ARGUMENT

Parameters
- `[in] child_mac`: an associated child address of this device
- `[out] nodes`: pointer to nodes in the subnet of a specific child
- `[in] nodes_num`: the number of nodes in the subnet of a specific child

esp_err_t **esp_mesh_disconnect**(void)
Disconnect from current parent.

Return
- ESP_OK

esp_err_t **esp_mesh_connect**(void)
Connect to current parent.

Return
- ESP_OK

esp_err_t **esp_mesh_flush_scan_result**(void)
Flush scan result.

Return
- ESP_OK

esp_err_t **esp_mesh_switch_channel**(**const** uint8_t **new_bssid*, int *csa_newchan*, int *csa_count*)
Cause the root device to add Channel Switch Announcement Element (CSA IE) to beacon.

- Set the new channel
- Set how many beacons with CSA IE will be sent before changing a new channel
- Enable the channel switch function

Attention This API is only called by the root.
Return
- ESP_OK

Parameters
- `[in] new_bssid`: the new router BSSID if the router changes
- `[in] csa_newchan`: the new channel number to which the whole network is moving
- `[in] csa_count`: channel switch period(beacon count), unit is based on beacon interval of its softAP, the default value is 15.

esp_err_t **esp_mesh_get_router_bssid**(uint8_t **router_bssid*)
Get the router BSSID.

Return
- ESP_OK
- ESP_ERR_WIFI_NOT_INIT
- ESP_ERR_WIFI_ARG

Parameters
- `[out] router_bssid`: pointer to the router BSSID

int64_t **esp_mesh_get_tsf_time**(void)
Get the TSF time.

Return the TSF time

esp_err_t **esp_mesh_set_topology**(*esp_mesh_topology_t topo*)
Set mesh topology. The default value is MESH_TOPO_TREE.

- MESH_TOPO_CHAIN supports up to 1000 layers

Attention This API shall be called before mesh is started.
Return
- ESP_OK

- ESP_MESH_ERR_ARGUMENT
- ESP_ERR_MESH_NOT_ALLOWED

Parameters

- `[in] topo`: MESH_TOPO_TREE or MESH_TOPO_CHAIN

esp_mesh_topology_t **esp_mesh_get_topology**(void)

Get mesh topology.

Return MESH_TOPO_TREE or MESH_TOPO_CHAIN

esp_err_t **esp_mesh_enable_ps**(void)

Enable mesh Power Save function.

Attention This API shall be called before mesh is started.

Return

- ESP_OK
- ESP_ERR_WIFI_NOT_INIT
- ESP_ERR_MESH_NOT_ALLOWED

esp_err_t **esp_mesh_disable_ps**(void)

Disable mesh Power Save function.

Attention This API shall be called before mesh is started.

Return

- ESP_OK
- ESP_ERR_WIFI_NOT_INIT
- ESP_ERR_MESH_NOT_ALLOWED

bool **esp_mesh_is_ps_enabled**(void)

Check whether the mesh Power Save function is enabled.

Return true/false

bool **esp_mesh_is_device_active**(void)

Check whether the device is in active state.

- If the device is not in active state, it will neither transmit nor receive frames.

Return true/false

esp_err_t **esp_mesh_set_active_duty_cycle**(int *dev_duty*, int *dev_duty_type*)

Set the device duty cycle and type.

- The range of dev_duty values is 1 to 100. The default value is 10.
- dev_duty = 100, the PS will be stopped.
- dev_duty is better to not less than 5.
- dev_duty_type could be MESH_PS_DEVICE_DUTY_REQUEST or MESH_PS_DEVICE_DUTY_DEMAND.
- If dev_duty_type is set to MESH_PS_DEVICE_DUTY_REQUEST, the device will use a nwk_duty provided by the network.
- If dev_duty_type is set to MESH_PS_DEVICE_DUTY_DEMAND, the device will use the specified dev_duty.

Attention This API can be called at any time after mesh is started.

Return

- ESP_OK
- ESP_FAIL

Parameters

- `[in] dev_duty`: device duty cycle
- `[in] dev_duty_type`: device PS duty cycle type, not accept MESH_PS_NETWORK_DUTY_MASTER

esp_err_t **esp_mesh_get_active_duty_cycle**(int **dev_duty*, int **dev_duty_type*)

Get device duty cycle and type.

Return

- ESP_OK

Parameters

- `[out] dev_duty`: device duty cycle
- `[out] dev_duty_type`: device PS duty cycle type

esp_err_t **esp_mesh_set_network_duty_cycle**(int *nwk_duty*, int *duration_mins*, int *applied_rule*)

Set the network duty cycle, duration and rule.

- The range of nwk_duty values is 1 to 100. The default value is 10.
- nwk_duty is the network duty cycle the entire network or the up-link path will use. A device that successfully sets the nwk_duty is known as a NWK-DUTY-MASTER.
- duration_mins specifies how long the specified nwk_duty will be used. Once duration_mins expires, the root will take over as the NWK-DUTY-MASTER. If an existing NWK-DUTY-MASTER leaves the network, the root will take over as the NWK-DUTY-MASTER again.
- duration_mins = (-1) represents nwk_duty will be used until a new NWK-DUTY-MASTER with a different nwk_duty appears.
- Only the root can set duration_mins to (-1).
- If applied_rule is set to MESH_PS_NETWORK_DUTY_APPLIED_ENTIRE, the nwk_duty will be used by the entire network.
- If applied_rule is set to MESH_PS_NETWORK_DUTY_APPLIED_UPLINK, the nwk_duty will only be used by the up-link path nodes.
- The root does not accept MESH_PS_NETWORK_DUTY_APPLIED_UPLINK.
- A nwk_duty with duration_mins(-1) set by the root is the default network duty cycle used by the entire network.

Attention This API can be called at any time after mesh is started.

- In self-organized network, if this API is called before mesh is started in all devices, (1)nwk_duty shall be set to the same value for all devices; (2)duration_mins shall be set to (-1); (3)applied_rule shall be set to MESH_PS_NETWORK_DUTY_APPLIED_ENTIRE; after the voted root appears, the root will become the NWK-DUTY-MASTER and broadcast the nwk_duty and its identity of NWK-DUTY-MASTER.
- If the root is specified (FIXED-ROOT), call this API in the root to provide a default nwk_duty for the entire network.
- After joins the network, any device can call this API to change the nwk_duty, duration_mins or applied_rule.

Return

- ESP_OK
- ESP_FAIL

Parameters

- `[in] nwk_duty`: network duty cycle
- `[in] duration_mins`: duration (unit: minutes)
- `[in] applied_rule`: only support MESH_PS_NETWORK_DUTY_APPLIED_ENTIRE

esp_err_t **esp_mesh_get_network_duty_cycle**(int **nwk_duty*, int **duration_mins*, int **dev_duty_type*, int **applied_rule*)

Get the network duty cycle, duration, type and rule.

Return

- ESP_OK

Parameters

- `[out] nwk_duty`: current network duty cycle
- `[out] duration_mins`: the duration of current nwk_duty
- `[out] dev_duty_type`: if it includes MESH_PS_DEVICE_DUTY_MASTER, this device is the current NWK-DUTY-MASTER.
- `[out] applied_rule`: MESH_PS_NETWORK_DUTY_APPLIED_ENTIRE

int **esp_mesh_get_running_active_duty_cycle**(void)

Get the running active duty cycle.

- The running active duty cycle of the root is 100.
- If duty type is set to MESH_PS_DEVICE_DUTY_REQUEST, the running active duty cycle is nwk_duty provided by the network.

- If duty type is set to MESH_PS_DEVICE_DUTY_DEMAND, the running active duty cycle is dev_duty specified by the users.
- In a mesh network, devices are typically working with a certain duty-cycle (transmitting, receiving and sleep) to reduce the power consumption. The running active duty cycle decides the amount of awake time within a beacon interval. At each start of beacon interval, all devices wake up, broadcast beacons, and transmit packets if they do have pending packets for their parents or for their children. Note that Low-duty-cycle means devices may not be active in most of the time, the latency of data transmission might be greater.

Return the running active duty cycle

esp_err_t **esp_mesh_ps_duty_signaling**(int *fwd_times*)

Duty signaling.

Return

- ESP_OK

Parameters

- `[in] fwd_times`: the times of forwarding duty signaling packets

Unions

union mesh_addr_t

#include <esp_mesh.h> Mesh address.

Public Members

uint8_t **addr**[6]

mac address

mip_t **mip**

mip address

union mesh_event_info_t

#include <esp_mesh.h> Mesh event information.

Public Members

mesh_event_channel_switch_t **channel_switch**

channel switch

mesh_event_child_connected_t **child_connected**

child connected

mesh_event_child_disconnected_t **child_disconnected**

child disconnected

mesh_event_routing_table_change_t **routing_table**

routing table change

mesh_event_connected_t **connected**

parent connected

mesh_event_disconnected_t **disconnected**

parent disconnected

mesh_event_no_parent_found_t **no_parent**

no parent found

mesh_event_layer_change_t **layer_change**

layer change

mesh_event_toDS_state_t **toDS_state**

toDS state, devices shall check this state firstly before trying to send packets to external IP network. This

state indicates right now whether the root is capable of sending packets out. If not, devices had better to wait until this state changes to be MESH_TODS_REACHABLE.

mesh_event_vote_started_t **vote_started**
vote started

mesh_event_root_address_t **root_addr**
root address

mesh_event_root_switch_req_t **switch_req**
root switch request

mesh_event_root_conflict_t **root_conflict**
other powerful root

mesh_event_root_fixed_t **root_fixed**
fixed root

mesh_event_scan_done_t **scan_done**
scan done

mesh_event_network_state_t **network_state**
network state, such as whether current mesh network has a root.

mesh_event_find_network_t **find_network**
network found that can join

mesh_event_router_switch_t **router_switch**
new router information

mesh_event_ps_duty_t **ps_duty**
PS duty information

union mesh_rc_config_t
#include <esp_mesh.h> Vote address configuration.

Public Members

int **attempts**
max vote attempts before a new root is elected automatically by mesh network. (min:15, 15 by default)

mesh_addr_t **rc_addr**
a new root address specified by users for API esp_mesh_waive_root()

Structures

struct mip_t
IP address and port.

Public Members

ip4_addr_t **ip4**
IP address

uint16_t **port**
port

struct mesh_event_channel_switch_t
Channel switch information.

Public Members

uint8_t **channel**
new channel

struct mesh_event_connected_t
Parent connected information.

Public Members

wifi_event_sta_connected_t **connected**
parent information, same as Wi-Fi event SYSTEM_EVENT_STA_CONNECTED does

uint16_t **self_layer**
layer

uint8_t **duty**
parent duty

struct mesh_event_no_parent_found_t
No parent found information.

Public Members

int **scan_times**
scan times being through

struct mesh_event_layer_change_t
Layer change information.

Public Members

uint16_t **new_layer**
new layer

struct mesh_event_vote_started_t
vote started information

Public Members

int **reason**
vote reason, vote could be initiated by children or by the root itself

int **attempts**
max vote attempts before stopped

mesh_addr_t **rc_addr**
root address specified by users via API esp_mesh_waive_root()

struct mesh_event_find_network_t
find a mesh network that this device can join

Public Members

uint8_t **channel**
channel number of the new found network

uint8_t **router_bssid**[6]
router BSSID

struct mesh_event_root_switch_req_t
Root switch request information.

Public Members

int **reason**
root switch reason, generally root switch is initialized by users via API esp_mesh_waive_root()

mesh_addr_t **rc_addr**
the address of root switch requester

struct mesh_event_root_conflict_t
Other powerful root address.

Public Members

int8_t **rssi**
rssi with router

uint16_t **capacity**
the number of devices in current network

uint8_t **addr**[6]
other powerful root address

struct mesh_event_routing_table_change_t
Routing table change.

Public Members

uint16_t **rt_size_new**
the new value

uint16_t **rt_size_change**
the changed value

struct mesh_event_root_fixed_t
Root fixed.

Public Members

bool **is_fixed**
status

struct mesh_event_scan_done_t
Scan done event information.

Public Members

uint8_t **number**
the number of APs scanned

struct mesh_event_network_state_t
Network state information.

Public Members

bool **is_rootless**
whether current mesh network has a root

struct mesh_event_ps_duty_t
PS duty information.

Public Members

uint8_t **duty**
parent or child duty

mesh_event_child_connected_t **child_connected**
child info

struct mesh_opt_t
Mesh option.

Public Members

uint8_t **type**
option type

uint16_t **len**
option length

uint8_t ***val**
option value

struct mesh_data_t
Mesh data for esp_mesh_send() and esp_mesh_recv()

Public Members

uint8_t ***data**
data

uint16_t **size**
data size

mesh_proto_t **proto**
data protocol

mesh_tos_t **tos**
data type of service

struct mesh_router_t
Router configuration.

Public Members

uint8_t **ssid**[32]
SSID

uint8_t **ssid_len**
length of SSID

uint8_t **bssid**[6]
BSSID, if this value is specified, users should also specify "allow_router_switch".

uint8_t **password**[64]
password

bool **allow_router_switch**
if the BSSID is specified and this value is also set, when the router of this specified BSSID fails to be found after "fail" (mesh_attempts_t) times, the whole network is allowed to switch to another router with the same SSID. The new router might also be on a different channel. The default value is false. There is a risk that if the password is different between the new switched router and the previous one, the mesh network could be established but the root will never connect to the new switched router.

struct mesh_ap_cfg_t
Mesh softAP configuration.

Public Members

uint8_t **password**[64]
mesh softAP password

uint8_t **max_connection**
max number of stations allowed to connect in, default 6, max 10 = max_connection + non-mesh_max_connectionmax mesh connections

uint8_t **nonmesh_max_connection**
max non-mesh connections

struct mesh_cfg_t
Mesh initialization configuration.

Public Members

uint8_t **channel**
channel, the mesh network on

bool **allow_channel_switch**
if this value is set, when "fail" (mesh_attempts_t) times is reached, device will change to a full channel scan for a network that could join. The default value is false.

mesh_addr_t **mesh_id**
mesh network identification

mesh_router_t **router**
router configuration

mesh_ap_cfg_t **mesh_ap**
mesh softAP configuration

const mesh_crypto_funcs_t ***crypto_funcs**
crypto functions

struct mesh_vote_t
Vote.

Public Members

float **percentage**
vote percentage threshold for approval of being a root

bool **is_rc_specified**
if true, rc_addr shall be specified (Unimplemented). if false, attempts value shall be specified to make network start root election.

mesh_rc_config_t **config**
vote address configuration

struct mesh_tx_pending_t
The number of packets pending in the queue waiting to be sent by the mesh stack.

Public Members

int **to_parent**
to parent queue

int **to_parent_p2p**
to parent (P2P) queue

int **to_child**
to child queue

int **to_child_p2p**
to child (P2P) queue

int **mgmt**
management queue

int **broadcast**
broadcast and multicast queue

struct mesh_rx_pending_t
The number of packets available in the queue waiting to be received by applications.

Public Members

int **toDS**
to external DS

int **toSelf**
to self

Macros

MESH_ROOT_LAYER
root layer value

MESH_MTU
max transmit unit(in bytes)

MESH_MPS
max payload size(in bytes)

ESP_ERR_MESH_WIFI_NOT_START
Mesh error code definition.

Wi-Fi isn’t started

ESP_ERR_MESH_NOT_INIT
mesh isn’t initialized

ESP_ERR_MESH_NOT_CONFIG
mesh isn’t configured

ESP_ERR_MESH_NOT_START
mesh isn’t started

ESP_ERR_MESH_NOT_SUPPORT
not supported yet

ESP_ERR_MESH_NOT_ALLOWED
operation is not allowed

ESP_ERR_MESH_NO_MEMORY
out of memory

ESP_ERR_MESH_ARGUMENT
illegal argument

ESP_ERR_MESH_EXCEED_MTU
packet size exceeds MTU

ESP_ERR_MESH_TIMEOUT
timeout

ESP_ERR_MESH_DISCONNECTED
disconnected with parent on station interface

ESP_ERR_MESH_QUEUE_FAIL
queue fail

ESP_ERR_MESH_QUEUE_FULL
queue full

ESP_ERR_MESH_NO_PARENT_FOUND
no parent found to join the mesh network

ESP_ERR_MESH_NO_ROUTE_FOUND
no route found to forward the packet

ESP_ERR_MESH_OPTION_NULL
no option found

ESP_ERR_MESH_OPTION_UNKNOWN
unknown option

ESP_ERR_MESH_XON_NO_WINDOW
no window for software flow control on upstream

ESP_ERR_MESH_INTERFACE
low-level Wi-Fi interface error

ESP_ERR_MESH_DISCARD_DUPLICATE
discard the packet due to the duplicate sequence number

ESP_ERR_MESH_DISCARD
discard the packet

ESP_ERR_MESH_VOTING
vote in progress

ESP_ERR_MESH_XMIT
XMIT

ESP_ERR_MESH_QUEUE_READ
error in reading queue

ESP_ERR_MESH_PS
mesh PS is not specified as enable or disable

ESP_ERR_MESH_RECV_RELEASE
release esp_mesh_recv_toDS

MESH_DATA_ENC
Flags bitmap for esp_mesh_send() and esp_mesh_recv()

data encrypted (Unimplemented)

MESH_DATA_P2P
point-to-point delivery over the mesh network

MESH_DATA_FROMDS
receive from external IP network

MESH_DATA_TODS
identify this packet is target to external IP network

MESH_DATA_NONBLOCK
esp_mesh_send() non-block

MESH_DATA_DROP
in the situation of the root having been changed, identify this packet can be dropped by new root

MESH_DATA_GROUP
identify this packet is target to a group address

MESH_OPT_SEND_GROUP
Option definitions for esp_mesh_send() and esp_mesh_recv()

data transmission by group; used with esp_mesh_send() and shall have payload

MESH_OPT_RECV_DS_ADDR
return a remote IP address; used with esp_mesh_send() and esp_mesh_recv()

MESH_ASSOC_FLAG_VOTE_IN_PROGRESS
Flag of mesh networking IE.

vote in progress

MESH_ASSOC_FLAG_NETWORK_FREE
no root in current network

MESH_ASSOC_FLAG_ROOTS_FOUND
root conflict is found

MESH_ASSOC_FLAG_ROOT_FIXED
fixed root

MESH_PS_DEVICE_DUTY_REQUEST
Mesh PS (Power Save) duty cycle type.

requests to join a network PS without specifying a device duty cycle. After the device joins the network, a network duty cycle will be provided by the network

MESH_PS_DEVICE_DUTY_DEMAND
requests to join a network PS and specifies a demanded device duty cycle

MESH_PS_NETWORK_DUTY_MASTER
indicates the device is the NWK-DUTY-MASTER (network duty cycle master)

MESH_PS_NETWORK_DUTY_APPLIED_ENTIRE
Mesh PS (Power Save) duty cycle applied rule.

MESH_PS_NETWORK_DUTY_APPLIED_UPLINK

MESH_INIT_CONFIG_DEFAULT()

Type Definitions

typedef *mesh_addr_t* **mesh_event_root_address_t**
Root address.

typedef *wifi_event_sta_disconnected_t* **mesh_event_disconnected_t**
Parent disconnected information.

typedef *wifi_event_ap_staconnected_t* **mesh_event_child_connected_t**
Child connected information.

typedef *wifi_event_ap_stadisconnected_t* **mesh_event_child_disconnected_t**
Child disconnected information.

typedef *wifi_event_sta_connected_t* **mesh_event_router_switch_t**
New router information.

Enumerations

enum mesh_event_id_t
Enumerated list of mesh event id.

Values:

MESH_EVENT_STARTED
mesh is started

MESH_EVENT_STOPPED
mesh is stopped

MESH_EVENT_CHANNEL_SWITCH
channel switch

MESH_EVENT_CHILD_CONNECTED
a child is connected on softAP interface

MESH_EVENT_CHILD_DISCONNECTED
a child is disconnected on softAP interface

MESH_EVENT_ROUTING_TABLE_ADD
routing table is changed by adding newly joined children

MESH_EVENT_ROUTING_TABLE_REMOVE
routing table is changed by removing leave children

MESH_EVENT_PARENT_CONNECTED
parent is connected on station interface

MESH_EVENT_PARENT_DISCONNECTED
parent is disconnected on station interface

MESH_EVENT_NO_PARENT_FOUND
no parent found

MESH_EVENT_LAYER_CHANGE
layer changes over the mesh network

MESH_EVENT_TODS_STATE
state represents whether the root is able to access external IP network. This state is a manual event that needs to be triggered with esp_mesh_post_toDS_state().

MESH_EVENT_VOTE_STARTED
the process of voting a new root is started either by children or by the root

MESH_EVENT_VOTE_STOPPED
the process of voting a new root is stopped

MESH_EVENT_ROOT_ADDRESS
the root address is obtained. It is posted by mesh stack automatically.

MESH_EVENT_ROOT_SWITCH_REQ
root switch request sent from a new voted root candidate

MESH_EVENT_ROOT_SWITCH_ACK
root switch acknowledgment responds the above request sent from current root

MESH_EVENT_ROOT_ASKED_YIELD
the root is asked yield by a more powerful existing root. If self organized is disabled and this device is specified to be a root by users, users should set a new parent for this device. if self organized is enabled, this device will find a new parent by itself, users could ignore this event.

MESH_EVENT_ROOT_FIXED
when devices join a network, if the setting of Fixed Root for one device is different from that of its parent, the device will update the setting the same as its parent's. Fixed Root Setting of each device is variable as that setting changes of the root.

MESH_EVENT_SCAN_DONE
if self-organized networking is disabled, user can call esp_wifi_scan_start() to trigger this event, and add the corresponding scan done handler in this event.

MESH_EVENT_NETWORK_STATE
network state, such as whether current mesh network has a root.

MESH_EVENT_STOP_RECONNECTION
the root stops reconnecting to the router and non-root devices stop reconnecting to their parents.

MESH_EVENT_FIND_NETWORK
when the channel field in mesh configuration is set to zero, mesh stack will perform a full channel scan to find a mesh network that can join, and return the channel value after finding it.

MESH_EVENT_ROUTER_SWITCH
if users specify BSSID of the router in mesh configuration, when the root connects to another router with the same SSID, this event will be posted and the new router information is attached.

MESH_EVENT_PS_PARENT_DUTY
parent duty

MESH_EVENT_PS_CHILD_DUTY
child duty

MESH_EVENT_PS_DEVICE_DUTY
device duty

MESH_EVENT_MAX

enum mesh_type_t
Device type.

Values:

MESH_IDLE
hasn't joined the mesh network yet

MESH_ROOT
the only sink of the mesh network. Has the ability to access external IP network

MESH_NODE
intermediate device. Has the ability to forward packets over the mesh network

MESH_LEAF
has no forwarding ability

MESH_STA
connect to router with a standlone Wi-Fi station mode, no network expansion capability

enum mesh_proto_t
Protocol of transmitted application data.

Values:

MESH_PROTO_BIN
binary

MESH_PROTO_HTTP
HTTP protocol

MESH_PROTO_JSON
JSON format

MESH_PROTO_MQTT
MQTT protocol

MESH_PROTO_AP
IP network mesh communication of node’s AP interface

MESH_PROTO_STA
IP network mesh communication of node’s STA interface

enum mesh_tos_t
For reliable transmission, mesh stack provides three type of services.

Values:

MESH_TOS_P2P
provide P2P (point-to-point) retransmission on mesh stack by default

MESH_TOS_E2E
provide E2E (end-to-end) retransmission on mesh stack (Unimplemented)

MESH_TOS_DEF
no retransmission on mesh stack

enum mesh_vote_reason_t
Vote reason.

Values:

MESH_VOTE_REASON_ROOT_INITIATED = 1
vote is initiated by the root

MESH_VOTE_REASON_CHILD_INITIATED
vote is initiated by children

enum mesh_disconnect_reason_t
Mesh disconnect reason code.

Values:

MESH_REASON_CYCLIC = 100
cyclic is detected

MESH_REASON_PARENT_IDLE
parent is idle

MESH_REASON_LEAF
the connected device is changed to a leaf

MESH_REASON_DIFF_ID
in different mesh ID

MESH_REASON_ROOTS
root conflict is detected

MESH_REASON_PARENT_STOPPED
parent has stopped the mesh

MESH_REASON_SCAN_FAIL
scan fail

MESH_REASON_IE_UNKNOWN
unknown IE

MESH_REASON_WAIVE_ROOT
waive root

MESH_REASON_PARENT_WORSE
parent with very poor RSSI

MESH_REASON_EMPTY_PASSWORD
use an empty password to connect to an encrypted parent

MESH_REASON_PARENT_UNENCRYPTED
connect to an unencrypted parent/router

enum esp_mesh_topology_t
Mesh topology.

Values:

MESH_TOPO_TREE
tree topology

MESH_TOPO_CHAIN
chain topology

enum mesh_event_toDS_state_t
The reachability of the root to a DS (distribute system)

Values:

MESH_TODS_UNREACHABLE
the root isn't able to access external IP network

MESH_TODS_REACHABLE
the root is able to access external IP network

Wi-Fi Easy Connect™ (DPP)

Wi-Fi Easy Connect™, also known as Device Provisioning Protocol (DPP) or Easy Connect, is a provisioning protocol certified by Wi-Fi Alliance. It is a secure and standardized provisioning protocol for configuration of Wi-Fi Devices. With Easy Connect adding a new device to a network is as simple as scanning a QR Code. This reduces complexity and enhances user experience while onboarding devices without UI like Smart Home and IoT products. Unlike old protocols like WiFi Protected Setup (WPS), Wi-Fi Easy Connect incorporates strong encryption through public key cryptography to ensure networks remain secure as new devices are added. Easy Connect brings many benefits in the User Experience:

- Simple and intuitive to use; no lengthy instructions to follow for new device setup
- No need to remember and enter passwords into the device being provisioned
- Works with electronic or printed QR codes, or human-readable strings
- Supports both WPA2 and WPA3 networks

Please refer to Wi-Fi Alliance's official page on Easy Connect for more information.

ESP32 supports Enrollee mode of Easy Connect with QR Code as the provisioning method. A display is required to display this QR Code. Users can scan this QR Code using their capable device and provision the ESP32 to their Wi-Fi network. The provisioning device needs to be connected to the AP which need not support Wi-Fi Easy Connect™. Easy Connect is still an evolving protocol. Of known platforms that support the QR Code method are some Android smartphones with Android 10 or higher. To use Easy Connect no additional App needs to be installed on the supported smartphone.

Application Example Example on how to provision ESP32 using a supported smartphone: wifi/wifi_easy_connect/dpp-enrollee.

API Reference

Header File

- wpa_supplicant/include/esp_supplicant/esp_dpp.h

Functions

esp_err_t **esp_supp_dpp_init** (*esp_supp_dpp_event_cb_t evt_cb*)

Initialize DPP Supplicant.

Starts DPP Supplicant and initializes related Data Structures.

return

- ESP_OK: Success
- ESP_FAIL: Failure

Parameters

- `evt_cb`: Callback function to receive DPP related events

void **esp_supp_dpp_deinit** (void)

De-initalize DPP Supplicant.

Frees memory from DPP Supplicant Data Structures.

esp_err_t **esp_supp_dpp_bootstrap_gen** (**const** char **chan_list*, *esp_supp_dpp_bootstrap_t type*, **const** char **key*, **const** char **info*)

Generates Bootstrap Information as an Enrollee.

Generates Out Of Band Bootstrap information as an Enrollee which can be used by a DPP Configurator to provision the Enrollee.

Return

- ESP_OK: Success
- ESP_FAIL: Failure

Parameters

- `chan_list`: List of channels device will be available on for listening
- `type`: Bootstrap method type, only QR Code method is supported for now.
- `key`: (Optional) Private Key used to generate a Bootstrapping Public Key
- `info`: (Optional) Ancilliary Device Information like Serial Number

esp_err_t **esp_supp_dpp_start_listen** (void)

Start listening on Channels provided during esp_supp_dpp_bootstrap_gen.

Listens on every Channel from Channel List for a pre-defined wait time.

Return

- ESP_OK: Success
- ESP_FAIL: Generic Failure
- ESP_ERR_INVALID_STATE: ROC attempted before WiFi is started
- ESP_ERR_NO_MEM: Memory allocation failed while posting ROC request

void **esp_supp_dpp_stop_listen** (void)

Stop listening on Channels.

Stops listening on Channels and cancels ongoing listen operation.

Macros

ESP_ERR_DPP_FAILURE

Generic failure during DPP Operation

ESP_ERR_DPP_TX_FAILURE

DPP Frame Tx failed OR not Acked

ESP_ERR_DPP_INVALID_ATTR

Encountered invalid DPP Attribute

Type Definitions

typedef enum *dpp_bootstrap_type* **esp_supp_dpp_bootstrap_t**

Types of Bootstrap Methods for DPP.

typedef void (***esp_supp_dpp_event_cb_t**) (*esp_supp_dpp_event_t* evt, void *data)
Callback function for receiving DPP Events from Supplicant.

Callback function will be called with DPP related information.

Parameters
- `evt`: DPP event ID
- `data`: Event data payload

Enumerations

enum dpp_bootstrap_type
Types of Bootstrap Methods for DPP.

Values:

DPP_BOOTSTRAP_QR_CODE
QR Code Method

DPP_BOOTSTRAP_PKEX
Proof of Knowledge Method

DPP_BOOTSTRAP_NFC_URI
NFC URI record Method

enum esp_supp_dpp_event_t
Types of Callback Events received from DPP Supplicant.

Values:

ESP_SUPP_DPP_URI_READY
URI is ready through Bootstrapping

ESP_SUPP_DPP_CFG_RECVD
Config received via DPP Authentication

ESP_SUPP_DPP_FAIL
DPP Authentication failure

本部分的 Wi-Fi API 示例代码存放在 ESP-IDF 示例项目的 wifi 目录下。

ESP-MESH 的示例代码存放在 ESP-IDF 示例项目的 mesh 目录下。

2.2.2 以太网

以太网

应用示例

- 以太网基本示例：ethernet/basic.
- 以太网 iperf 示例：ethernet/iperf.

以太网驱动程序模型

- esp_eth/include/esp_eth.h

以太网通用接口

- esp_eth/include/esp_eth_com.h

以太网 MAC 接口

- esp_eth/include/esp_eth_mac.h

以太网 PHY 接口

- esp_eth/include/esp_eth_phy.h

以太网 PHY 公共寄存器

- esp_eth/include/eth_phy_regs_struct.h

API 参考-驱动程序模型

Header File

- esp_eth/include/esp_eth.h

Functions

esp_err_t **esp_eth_driver_install**(**const** *esp_eth_config_t* *config, *esp_eth_handle_t* *out_hdl)

Install Ethernet driver.

Return
- ESP_OK: install esp_eth driver successfully
- ESP_ERR_INVALID_ARG: install esp_eth driver failed because of some invalid argument
- ESP_ERR_NO_MEM: install esp_eth driver failed because there' s no memory for driver
- ESP_FAIL: install esp_eth driver failed because some other error occurred

Parameters
- `[in] config`: configuration of the Ethernet driver
- `[out] out_hdl`: handle of Ethernet driver

esp_err_t **esp_eth_driver_uninstall**(*esp_eth_handle_t* *hdl*)

Uninstall Ethernet driver.

Note It' s not recommended to uninstall Ethernet driver unless it won' t get used any more in application code. To uninstall Ethernet driver, you have to make sure, all references to the driver are released. Ethernet driver can only be uninstalled successfully when reference counter equals to one.

Return
- ESP_OK: uninstall esp_eth driver successfully
- ESP_ERR_INVALID_ARG: uninstall esp_eth driver failed because of some invalid argument
- ESP_ERR_INVALID_STATE: uninstall esp_eth driver failed because it has more than one reference
- ESP_FAIL: uninstall esp_eth driver failed because some other error occurred

Parameters
- `[in] hdl`: handle of Ethernet driver

esp_err_t **esp_eth_start**(*esp_eth_handle_t* *hdl*)

Start Ethernet driver **ONLY** in standalone mode (i.e. without TCP/IP stack)

Note This API will start driver state machine and internal software timer (for checking link status).

Return
- ESP_OK: start esp_eth driver successfully
- ESP_ERR_INVALID_ARG: start esp_eth driver failed because of some invalid argument
- ESP_ERR_INVALID_STATE: start esp_eth driver failed because driver has started already
- ESP_FAIL: start esp_eth driver failed because some other error occurred

Parameters
- `[in] hdl`: handle of Ethernet driver

esp_err_t **esp_eth_stop**(*esp_eth_handle_t* *hdl*)

Stop Ethernet driver.

Note This function does the oppsite operation of `esp_eth_start`.

Return
- ESP_OK: stop esp_eth driver successfully
- ESP_ERR_INVALID_ARG: stop esp_eth driver failed because of some invalid argument

- ESP_ERR_INVALID_STATE: stop esp_eth driver failed because driver has not started yet
- ESP_FAIL: stop esp_eth driver failed because some other error occurred

Parameters

- `[in] hdl`: handle of Ethernet driver

esp_err_t **esp_eth_update_input_path**(*esp_eth_handle_t hdl*, *esp_err_t* (**stack_input*)) *esp_eth_handle_t* hdl, uint8_t *buffer, uint32_t length, void *priv , void **priv*Update Ethernet data input path (i.e. specify where to pass the input buffer)

Note After install driver, Ethernet still don't know where to deliver the input buffer. In fact, this API registers a callback function which get invoked when Ethernet received new packets.

Return

- ESP_OK: update input path successfully
- ESP_ERR_INVALID_ARG: update input path failed because of some invalid argument
- ESP_FAIL: update input path failed because some other error occurred

Parameters

- `[in] hdl`: handle of Ethernet driver
- `[in] stack_input`: function pointer, which does the actual process on incoming packets
- `[in] priv`: private resource, which gets passed to `stack_input` callback without any modification

esp_err_t **esp_eth_transmit**(*esp_eth_handle_t hdl*, void **buf*, size_t *length*)

General Transmit.

Return

- ESP_OK: transmit frame buffer successfully
- ESP_ERR_INVALID_ARG: transmit frame buffer failed because of some invalid argument
- ESP_FAIL: transmit frame buffer failed because some other error occurred

Parameters

- `[in] hdl`: handle of Ethernet driver
- `[in] buf`: buffer of the packet to transfer
- `[in] length`: length of the buffer to transfer

esp_err_t **esp_eth_receive**(*esp_eth_handle_t hdl*, uint8_t **buf*, uint32_t **length*)

General Receive is deprecated and shall not be accessed from app code, as polling is not supported by Ethernet.

Note Before this function got invoked, the value of "length" should set by user, equals the size of buffer. After the function returned, the value of "length" means the real length of received data.

Note This API was exposed by accident, users should not use this API in their applications. Ethernet driver is interrupt driven, and doesn't support polling mode. Instead, users should register input callback with `esp_eth_update_input_path`.

Return

- ESP_OK: receive frame buffer successfully
- ESP_ERR_INVALID_ARG: receive frame buffer failed because of some invalid argument
- ESP_ERR_INVALID_SIZE: input buffer size is not enough to hold the incoming data. in this case, value of returned "length" indicates the real size of incoming data.
- ESP_FAIL: receive frame buffer failed because some other error occurred

Parameters

- `[in] hdl`: handle of Ethernet driver
- `[out] buf`: buffer to preserve the received packet
- `[out] length`: length of the received packet

esp_err_t **esp_eth_ioctl**(*esp_eth_handle_t hdl*, *esp_eth_io_cmd_t cmd*, void **data*)

Misc IO function of Etherent driver.

Return

- ESP_OK: process io command successfully
- ESP_ERR_INVALID_ARG: process io command failed because of some invalid argument
- ESP_FAIL: process io command failed because some other error occurred

Parameters

- `[in] hdl`: handle of Ethernet driver

- `[in] cmd`: IO control command
- `[in] data`: specificed data for command

esp_err_t **esp_eth_increase_reference**(*esp_eth_handle_t hdl*)

Increase Ethernet driver reference.

Note Ethernet driver handle can be obtained by os timer, netif, etc. It's dangerous when thread A is using Ethernet but thread B uninstall the driver. Using reference counter can prevent such risk, but care should be taken, when you obtain Ethernet driver, this API must be invoked so that the driver won't be uninstalled during your using time.

Return

- ESP_OK: increase reference successfully
- ESP_ERR_INVALID_ARG: increase reference failed because of some invalid argument

Parameters

- `[in] hdl`: handle of Ethernet driver

esp_err_t **esp_eth_decrease_reference**(*esp_eth_handle_t hdl*)

Decrease Ethernet driver reference.

Return

- ESP_OK: increase reference successfully
- ESP_ERR_INVALID_ARG: increase reference failed because of some invalid argument

Parameters

- `[in] hdl`: handle of Ethernet driver

Structures

struct esp_eth_config_t

Configuration of Ethernet driver.

Public Members

esp_eth_mac_t ***mac**

Ethernet MAC object.

esp_eth_phy_t ***phy**

Ethernet PHY object.

uint32_t **check_link_period_ms**

Period time of checking Ethernet link status.

esp_err_t (***stack_input**)(*esp_eth_handle_t* eth_handle, uint8_t *buffer, uint32_t length, void *priv)

Input frame buffer to user's stack.

Return

- ESP_OK: input frame buffer to upper stack successfully
- ESP_FAIL: error occurred when inputting buffer to upper stack

Parameters

- `[in] eth_handle`: handle of Ethernet driver
- `[in] buffer`: frame buffer that will get input to upper stack
- `[in] length`: length of the frame buffer

esp_err_t (***on_lowlevel_init_done**)(*esp_eth_handle_t* eth_handle)

Callback function invoked when lowlevel initialization is finished.

Return

- ESP_OK: process extra lowlevel initialization successfully
- ESP_FAIL: error occurred when processing extra lowlevel initialization

Parameters

- `[in] eth_handle`: handle of Ethernet driver

esp_err_t (***on_lowlevel_deinit_done**) (*esp_eth_handle_t* eth_handle)
Callback function invoked when lowlevel deinitialization is finished.

Return
- ESP_OK: process extra lowlevel deinitialization successfully
- ESP_FAIL: error occurred when processing extra lowlevel deinitialization

Parameters
- `[in] eth_handle`: handle of Ethernet driver

Macros

ETH_DEFAULT_CONFIG (emac, ephy)
Default configuration for Ethernet driver.

Type Definitions

typedef void ***esp_eth_handle_t**
Handle of Ethernet driver.

API 参考–通用接口

Header File

- esp_eth/include/esp_eth_com.h

Functions

esp_err_t **esp_eth_detect_phy_addr** (*esp_eth_mediator_t* **eth*, int **detected_addr*)
Detect PHY address.

Return
- ESP_OK: detect phy address successfully
- ESP_ERR_INVALID_ARG: invalid parameter
- ESP_ERR_NOT_FOUND: can't detect any PHY device
- ESP_FAIL: detect phy address failed because some error occurred

Parameters
- `[in] eth`: mediator of Ethernet driver
- `[out] detected_addr`: a valid address after detection

Structures

struct esp_eth_mediator_s
Ethernet mediator.

Public Members

esp_err_t (***phy_reg_read**) (*esp_eth_mediator_t* *eth, uint32_t phy_addr, uint32_t phy_reg, uint32_t *reg_value)
Read PHY register.

Return
- ESP_OK: read PHY register successfully
- ESP_FAIL: read PHY register failed because some error occurred

Parameters
- `[in] eth`: mediator of Ethernet driver
- `[in] phy_addr`: PHY Chip address (0~31)
- `[in] phy_reg`: PHY register index code
- `[out] reg_value`: PHY register value

esp_err_t (***phy_reg_write***)(*esp_eth_mediator_t* *eth, uint32_t phy_addr, uint32_t phy_reg, uint32_t reg_value)

Write PHY register.

Return

- ESP_OK: write PHY register successfully
- ESP_FAIL: write PHY register failed because some error occurred

Parameters

- `[in] eth`: mediator of Ethernet driver
- `[in] phy_addr`: PHY Chip address (0~31)
- `[in] phy_reg`: PHY register index code
- `[in] reg_value`: PHY register value

esp_err_t (***stack_input***)(*esp_eth_mediator_t* *eth, uint8_t *buffer, uint32_t length)

Deliver packet to upper stack.

Return

- ESP_OK: deliver packet to upper stack successfully
- ESP_FAIL: deliver packet failed because some error occurred

Parameters

- `[in] eth`: mediator of Ethernet driver
- `[in] buffer`: packet buffer
- `[in] length`: length of the packet

esp_err_t (***on_state_changed***)(*esp_eth_mediator_t* *eth, *esp_eth_state_t* state, void *args)

Callback on Ethernet state changed.

Return

- ESP_OK: process the new state successfully
- ESP_FAIL: process the new state failed because some error occurred

Parameters

- `[in] eth`: mediator of Ethernet driver
- `[in] state`: new state
- `[in] args`: optional argument for the new state

Macros

ETH_MAX_PAYLOAD_LEN

Maximum Ethernet payload size.

ETH_MIN_PAYLOAD_LEN

Minimum Ethernet payload size.

ETH_HEADER_LEN

Ethernet frame header size: Dest addr(6 Bytes) + Src addr(6 Bytes) + length/type(2 Bytes)

ETH_CRC_LEN

Ethernet frame CRC length.

ETH_VLAN_TAG_LEN

Optional 802.1q VLAN Tag length.

ETH_JUMBO_FRAME_PAYLOAD_LEN

Jumbo frame payload size.

ETH_MAX_PACKET_SIZE

Maximum frame size (1522 Bytes)

ETH_MIN_PACKET_SIZE

Minimum frame size (64 Bytes)

Type Definitions

typedef struct *esp_eth_mediator_s* **esp_eth_mediator_t**

Ethernet mediator.

Enumerations

enum esp_eth_state_t

Ethernet driver state.

Values:

ETH_STATE_LLINIT
Lowlevel init done

ETH_STATE_DEINIT
Deinit done

ETH_STATE_LINK
Link status changed

ETH_STATE_SPEED
Speed updated

ETH_STATE_DUPLEX
Duplex updated

ETH_STATE_PAUSE
Pause ability updated

enum esp_eth_io_cmd_t

Command list for ioctl API.

Values:

ETH_CMD_G_MAC_ADDR
Get MAC address

ETH_CMD_S_MAC_ADDR
Set MAC address

ETH_CMD_G_PHY_ADDR
Get PHY address

ETH_CMD_S_PHY_ADDR
Set PHY address

ETH_CMD_G_SPEED
Get Speed

ETH_CMD_S_PROMISCUOUS
Set promiscuous mode

ETH_CMD_S_FLOW_CTRL
Set flow control

ETH_CMD_G_DUPLEX_MODE
Get Duplex mode

enum eth_link_t

Ethernet link status.

Values:

ETH_LINK_UP
Ethernet link is up

ETH_LINK_DOWN
Ethernet link is down

enum eth_speed_t

Ethernet speed.

Values:

ETH_SPEED_10M
Ethernet speed is 10Mbps

ETH_SPEED_100M
Ethernet speed is 100Mbps

enum eth_duplex_t
Ethernet duplex mode.

Values:

ETH_DUPLEX_HALF
Ethernet is in half duplex

ETH_DUPLEX_FULL
Ethernet is in full duplex

enum eth_event_t
Ethernet event declarations.

Values:

ETHERNET_EVENT_START
Ethernet driver start

ETHERNET_EVENT_STOP
Ethernet driver stop

ETHERNET_EVENT_CONNECTED
Ethernet got a valid link

ETHERNET_EVENT_DISCONNECTED
Ethernet lost a valid link

API 参考–MAC 接口

Header File

- esp_eth/include/esp_eth_mac.h

Functions

esp_eth_mac_t ***esp_eth_mac_new_esp32**(**const** *eth_mac_config_t* **config*)
Create ESP32 Ethernet MAC instance.

Return
- instance: create MAC instance successfully
- NULL: create MAC instance failed because some error occurred

Parameters
- `config`: Ethernet MAC configuration

Structures

struct esp_eth_mac_s
Ethernet MAC.

Public Members

esp_err_t (***set_mediator**)(*esp_eth_mac_t* *mac, *esp_eth_mediator_t* *eth)
Set mediator for Ethernet MAC.

Return
- ESP_OK: set mediator for Ethernet MAC successfully
- ESP_ERR_INVALID_ARG: set mediator for Ethernet MAC failed because of invalid argument

Parameters

- `[in] mac`: Ethernet MAC instance
- `[in] eth`: Ethernet mediator

esp_err_t (***init**)(*esp_eth_mac_t* *mac)

Initialize Ethernet MAC.

Return
- ESP_OK: initialize Ethernet MAC successfully
- ESP_ERR_TIMEOUT: initialize Ethernet MAC failed because of timeout
- ESP_FAIL: initialize Ethernet MAC failed because some other error occurred

Parameters
- `[in] mac`: Ethernet MAC instance

esp_err_t (***deinit**)(*esp_eth_mac_t* *mac)

Deinitialize Ethernet MAC.

Return
- ESP_OK: deinitialize Ethernet MAC successfully
- ESP_FAIL: deinitialize Ethernet MAC failed because some error occurred

Parameters
- `[in] mac`: Ethernet MAC instance

esp_err_t (***start**)(*esp_eth_mac_t* *mac)

Start Ethernet MAC.

Return
- ESP_OK: start Ethernet MAC successfully
- ESP_FAIL: start Ethernet MAC failed because some other error occurred

Parameters
- `[in] mac`: Ethernet MAC instance

esp_err_t (***stop**)(*esp_eth_mac_t* *mac)

Stop Ethernet MAC.

Return
- ESP_OK: stop Ethernet MAC successfully
- ESP_FAIL: stop Ethernet MAC failed because some error occurred

Parameters
- `[in] mac`: Ethernet MAC instance

esp_err_t (***transmit**)(*esp_eth_mac_t* *mac, uint8_t *buf, uint32_t length)

Transmit packet from Ethernet MAC.

Return
- ESP_OK: transmit packet successfully
- ESP_ERR_INVALID_ARG: transmit packet failed because of invalid argument
- ESP_ERR_INVALID_STATE: transmit packet failed because of wrong state of MAC
- ESP_FAIL: transmit packet failed because some other error occurred

Parameters
- `[in] mac`: Ethernet MAC instance
- `[in] buf`: packet buffer to transmit
- `[in] length`: length of packet

esp_err_t (***receive**)(*esp_eth_mac_t* *mac, uint8_t *buf, uint32_t *length)

Receive packet from Ethernet MAC.

Note Memory of buf is allocated in the Layer2, make sure it get free after process.

Note Before this function got invoked, the value of "length" should set by user, equals the size of buffer. After the function returned, the value of "length" means the real length of received data.

Return
- ESP_OK: receive packet successfully
- ESP_ERR_INVALID_ARG: receive packet failed because of invalid argument
- ESP_ERR_INVALID_SIZE: input buffer size is not enough to hold the incoming data. in this case, value of returned "length" indicates the real size of incoming data.

- ESP_FAIL: receive packet failed because some other error occurred

Parameters

- `[in] mac`: Ethernet MAC instance
- `[out] buf`: packet buffer which will preserve the received frame
- `[out] length`: length of the received packet

esp_err_t (***read_phy_reg**) (*esp_eth_mac_t* *mac, uint32_t phy_addr, uint32_t phy_reg, uint32_t *reg_value)

Read PHY register.

Return

- ESP_OK: read PHY register successfully
- ESP_ERR_INVALID_ARG: read PHY register failed because of invalid argument
- ESP_ERR_INVALID_STATE: read PHY register failed because of wrong state of MAC
- ESP_ERR_TIMEOUT: read PHY register failed because of timeout
- ESP_FAIL: read PHY register failed because some other error occurred

Parameters

- `[in] mac`: Ethernet MAC instance
- `[in] phy_addr`: PHY chip address (0~31)
- `[in] phy_reg`: PHY register index code
- `[out] reg_value`: PHY register value

esp_err_t (***write_phy_reg**) (*esp_eth_mac_t* *mac, uint32_t phy_addr, uint32_t phy_reg, uint32_t reg_value)

Write PHY register.

Return

- ESP_OK: write PHY register successfully
- ESP_ERR_INVALID_STATE: write PHY register failed because of wrong state of MAC
- ESP_ERR_TIMEOUT: write PHY register failed because of timeout
- ESP_FAIL: write PHY register failed because some other error occurred

Parameters

- `[in] mac`: Ethernet MAC instance
- `[in] phy_addr`: PHY chip address (0~31)
- `[in] phy_reg`: PHY register index code
- `[in] reg_value`: PHY register value

esp_err_t (***set_addr**) (*esp_eth_mac_t* *mac, uint8_t *addr)

Set MAC address.

Return

- ESP_OK: set MAC address successfully
- ESP_ERR_INVALID_ARG: set MAC address failed because of invalid argument
- ESP_FAIL: set MAC address failed because some other error occurred

Parameters

- `[in] mac`: Ethernet MAC instance
- `[in] addr`: MAC address

esp_err_t (***get_addr**) (*esp_eth_mac_t* *mac, uint8_t *addr)

Get MAC address.

Return

- ESP_OK: get MAC address successfully
- ESP_ERR_INVALID_ARG: get MAC address failed because of invalid argument
- ESP_FAIL: get MAC address failed because some other error occurred

Parameters

- `[in] mac`: Ethernet MAC instance
- `[out] addr`: MAC address

esp_err_t (***set_speed**) (*esp_eth_mac_t* *mac, *eth_speed_t* speed)

Set speed of MAC.

Return

- ESP_OK: set MAC speed successfully
- ESP_ERR_INVALID_ARG: set MAC speed failed because of invalid argument
- ESP_FAIL: set MAC speed failed because some other error occurred

Parameters

- `[in] ma:c`: Ethernet MAC instance
- `[in] speed`: MAC speed

esp_err_t (***set_duplex**) (*esp_eth_mac_t* *mac, *eth_duplex_t* duplex)

Set duplex mode of MAC.

Return

- ESP_OK: set MAC duplex mode successfully
- ESP_ERR_INVALID_ARG: set MAC duplex failed because of invalid argument
- ESP_FAIL: set MAC duplex failed because some other error occurred

Parameters

- `[in] mac`: Ethernet MAC instance
- `[in] duplex`: MAC duplex

esp_err_t (***set_link**) (*esp_eth_mac_t* *mac, *eth_link_t* link)

Set link status of MAC.

Return

- ESP_OK: set link status successfully
- ESP_ERR_INVALID_ARG: set link status failed because of invalid argument
- ESP_FAIL: set link status failed because some other error occurred

Parameters

- `[in] mac`: Ethernet MAC instance
- `[in] link`: Link status

esp_err_t (***set_promiscuous**) (*esp_eth_mac_t* *mac, bool enable)

Set promiscuous of MAC.

Return

- ESP_OK: set promiscuous mode successfully
- ESP_FAIL: set promiscuous mode failed because some error occurred

Parameters

- `[in] mac`: Ethernet MAC instance
- `[in] enable`: set true to enable promiscuous mode; set false to disable promiscuous mode

esp_err_t (***enable_flow_ctrl**) (*esp_eth_mac_t* *mac, bool enable)

Enable flow control on MAC layer or not.

Return

- ESP_OK: set flow control successfully
- ESP_FAIL: set flow control failed because some error occurred

Parameters

- `[in] mac`: Ethernet MAC instance
- `[in] enable`: set true to enable flow control; set false to disable flow control

esp_err_t (***set_peer_pause_ability**) (*esp_eth_mac_t* *mac, uint32_t ability)

Set the PAUSE ability of peer node.

Return

- ESP_OK: set peer pause ability successfully
- ESP_FAIL: set peer pause ability failed because some error occurred

Parameters

- `[in] mac`: Ethernet MAC instance
- `[in] ability`: zero indicates that pause function is supported by link partner; non-zero indicates that pause function is not supported by link partner

esp_err_t (***del**) (*esp_eth_mac_t* *mac)

Free memory of Ethernet MAC.

Return

- ESP_OK: free Ethernet MAC instance successfully
- ESP_FAIL: free Ethernet MAC instance failed because some error occurred

Parameters

- `[in] mac`: Ethernet MAC instance

struct eth_mac_config_t

Configuration of Ethernet MAC object.

Public Members

uint32_t **sw_reset_timeout_ms**

Software reset timeout value (Unit: ms)

uint32_t **rx_task_stack_size**

Stack size of the receive task

uint32_t **rx_task_prio**

Priority of the receive task

int **smi_mdc_gpio_num**

SMI MDC GPIO number, set to -1 could bypass the SMI GPIO configuration

int **smi_mdio_gpio_num**

SMI MDIO GPIO number, set to -1 could bypass the SMI GPIO configuration

uint32_t **flags**

Flags that specify extra capability for mac driver

Macros

ETH_MAC_FLAG_WORK_WITH_CACHE_DISABLE

MAC driver can work when cache is disabled

ETH_MAC_FLAG_PIN_TO_CORE

Pin MAC task to the CPU core where driver installation happened

ETH_MAC_DEFAULT_CONFIG()

Default configuration for Ethernet MAC object.

Type Definitions

typedef struct *esp_eth_mac_s* **esp_eth_mac_t**

Ethernet MAC.

API 参考–PHY 接口

Header File

- esp_eth/include/esp_eth_phy.h

Functions

esp_eth_phy_t ***esp_eth_phy_new_ip101**(**const** *eth_phy_config_t* **config*)

Create a PHY instance of IP101.

Return

- instance: create PHY instance successfully
- NULL: create PHY instance failed because some error occurred

Parameters

- `[in] config`: configuration of PHY

esp_eth_phy_t ***esp_eth_phy_new_rtl8201**(**const** *eth_phy_config_t* **config*)

Create a PHY instance of RTL8201.

Return

- instance: create PHY instance successfully
- NULL: create PHY instance failed because some error occurred

Parameters

- `[in] config`: configuration of PHY

esp_eth_phy_t ***esp_eth_phy_new_lan8720**(**const** *eth_phy_config_t* *config*)

Create a PHY instance of LAN8720.

Return

- instance: create PHY instance successfully
- NULL: create PHY instance failed because some error occurred

Parameters

- `[in] config`: configuration of PHY

esp_eth_phy_t ***esp_eth_phy_new_dp83848**(**const** *eth_phy_config_t* *config*)

Create a PHY instance of DP83848.

Return

- instance: create PHY instance successfully
- NULL: create PHY instance failed because some error occurred

Parameters

- `[in] config`: configuration of PHY

esp_eth_phy_t ***esp_eth_phy_new_ksz8041**(**const** *eth_phy_config_t* *config*)

Create a PHY instance of KSZ8041.

Return

- instance: create PHY instance successfully
- NULL: create PHY instance failed because some error occurred

Parameters

- `[in] config`: configuration of PHY

Structures

struct esp_eth_phy_s

Ethernet PHY.

Public Members

esp_err_t (***set_mediator**)(*esp_eth_phy_t* *phy, *esp_eth_mediator_t* *mediator)

Set mediator for PHY.

Return

- ESP_OK: set mediator for Ethernet PHY instance successfully
- ESP_ERR_INVALID_ARG: set mediator for Ethernet PHY instance failed because of some invalid arguments

Parameters

- `[in] phy`: Ethernet PHY instance
- `[in] mediator`: mediator of Ethernet driver

esp_err_t (***reset**)(*esp_eth_phy_t* *phy)

Software Reset Ethernet PHY.

Return

- ESP_OK: reset Ethernet PHY successfully
- ESP_FAIL: reset Ethernet PHY failed because some error occurred

Parameters

- `[in] phy`: Ethernet PHY instance

esp_err_t (***reset_hw**)(*esp_eth_phy_t* *phy)

Hardware Reset Ethernet PHY.

Note Hardware reset is mostly done by pull down and up PHY’s nRST pin

Return

- ESP_OK: reset Ethernet PHY successfully
- ESP_FAIL: reset Ethernet PHY failed because some error occurred

Parameters

- `[in] phy`: Ethernet PHY instance

esp_err_t (***init**) (*esp_eth_phy_t* *phy)

Initialize Ethernet PHY.

Return

- ESP_OK: initialize Ethernet PHY successfully
- ESP_FAIL: initialize Ethernet PHY failed because some error occurred

Parameters

- `[in] phy`: Ethernet PHY instance

esp_err_t (***deinit**) (*esp_eth_phy_t* *phy)

Deinitialize Ethernet PHY.

Return

- ESP_OK: deinitialize Ethernet PHY successfully
- ESP_FAIL: deinitialize Ethernet PHY failed because some error occurred

Parameters

- `[in] phyL`: Ethernet PHY instance

esp_err_t (***negotiate**) (*esp_eth_phy_t* *phy)

Start auto negotiation.

Return

- ESP_OK: restart auto negotiation successfully
- ESP_FAIL: restart auto negotiation failed because some error occurred

Parameters

- `[in] phy`: Ethernet PHY instance

esp_err_t (***get_link**) (*esp_eth_phy_t* *phy)

Get Ethernet PHY link status.

Return

- ESP_OK: get Ethernet PHY link status successfully
- ESP_FAIL: get Ethernet PHY link status failed because some error occurred

Parameters

- `[in] phy`: Ethernet PHY instance

esp_err_t (***pwrctl**) (*esp_eth_phy_t* *phy, bool enable)

Power control of Ethernet PHY.

Return

- ESP_OK: control Ethernet PHY power successfully
- ESP_FAIL: control Ethernet PHY power failed because some error occurred

Parameters

- `[in] phy`: Ethernet PHY instance
- `[in] enable`: set true to power on Ethernet PHY; ser false to power off Ethernet PHY

esp_err_t (***set_addr**) (*esp_eth_phy_t* *phy, uint32_t addr)

Set PHY chip address.

Return

- ESP_OK: set Ethernet PHY address successfully
- ESP_FAIL: set Ethernet PHY address failed because some error occurred

Parameters

- `[in] phy`: Ethernet PHY instance
- `[in] addr`: PHY chip address

esp_err_t (***get_addr**) (*esp_eth_phy_t* *phy, uint32_t *addr)

Get PHY chip address.

Return
- ESP_OK: get Ethernet PHY address successfully
- ESP_ERR_INVALID_ARG: get Ethernet PHY address failed because of invalid argument

Parameters
- `[in] phy`: Ethernet PHY instance
- `[out] addr`: PHY chip address

esp_err_t (***advertise_pause_ability**) (*esp_eth_phy_t* *phy, uint32_t ability)
Advertise pause function supported by MAC layer.

Return
- ESP_OK: Advertise pause ability successfully
- ESP_ERR_INVALID_ARG: Advertise pause ability failed because of invalid argument

Parameters
- `[in] phy`: Ethernet PHY instance
- `[out] addr`: Pause ability

esp_err_t (***del**) (*esp_eth_phy_t* *phy)
Free memory of Ethernet PHY instance.

Return
- ESP_OK: free PHY instance successfully
- ESP_FAIL: free PHY instance failed because some error occurred

Parameters
- `[in] phy`: Ethernet PHY instance

struct eth_phy_config_t
Ethernet PHY configuration.

Public Members

int32_t **phy_addr**
PHY address, set -1 to enable PHY address detection at initialization stage

uint32_t **reset_timeout_ms**
Reset timeout value (Unit: ms)

uint32_t **autonego_timeout_ms**
Auto-negotiation timeout value (Unit: ms)

int **reset_gpio_num**
Reset GPIO number, -1 means no hardware reset

Macros

ESP_ETH_PHY_ADDR_AUTO

ETH_PHY_DEFAULT_CONFIG()
Default configuration for Ethernet PHY object.

Type Definitions

typedef struct *esp_eth_phy_s* **esp_eth_phy_t**
Ethernet PHY.

API 参考–esp_netif 相关使用

Header File

- esp_eth/include/esp_eth_netif_glue.h

Functions

void *__esp_eth_new_netif_glue__(*esp_eth_handle_t eth_hdl*)

Create a netif glue for Ethernet driver.

Note netif glue is used to attach io driver to TCP/IP netif

Return glue object, which inherits esp_netif_driver_base_t

Parameters

- `eth_hdl`: Ethernet driver handle

esp_err_t __esp_eth_del_netif_glue__(void **glue*)

Delete netif glue of Ethernet driver.

Return -ESP_OK: delete netif glue successfully

Parameters

- `glue`: netif glue

esp_err_t __esp_eth_set_default_handlers__(void **esp_netif*)

Register default IP layer handlers for Ethernet.

Note : Ethernet handle might not yet properly initialized when setting up these default handlers

Return

- ESP_ERR_INVALID_ARG: invalid parameter (esp_netif is NULL)
- ESP_OK: set default IP layer handlers successfully
- others: other failure occurred during register esp_event handler

Parameters

- `[in] esp_netif`: esp network interface handle created for Ethernet driver

esp_err_t __esp_eth_clear_default_handlers__(void **esp_netif*)

Unregister default IP layer handlers for Ethernet.

Return

- ESP_ERR_INVALID_ARG: invalid parameter (esp_netif is NULL)
- ESP_OK: clear default IP layer handlers successfully
- others: other failure occurred during unregister esp_event handler

Parameters

- `[in] esp_netif`: esp network interface handle created for Ethernet driver

本部分的以太网 API 示例代码存放在 ESP-IDF 示例项目的 ethernet 目录下。

2.2.3 IP 网络层协议

ESP-NETIF

The purpose of ESP-NETIF library is twofold:

- It provides an abstraction layer for the application on top of the TCP/IP stack. This will allow applications to choose between IP stacks in the future.
- The APIs it provides are thread safe, even if the underlying TCP/IP stack APIs are not.

ESP-IDF currently implements ESP-NETIF for the lwIP TCP/IP stack only. However, the adapter itself is TCP/IP implementation agnostic and different implementations are possible.

Some ESP-NETIF API functions are intended to be called by application code, for example to get/set interface IP addresses, configure DHCP. Other functions are intended for internal ESP-IDF use by the network driver layer.

In many cases, applications do not need to call ESP-NETIF APIs directly as they are called from the default network event handlers.

ESP-NETIF component is a successor of the tcpip_adapter, former network interface abstraction, which has become deprecated since IDF v4.1. Please refer to the *TCP/IP 适配器迁移指南* section in case existing applications to be ported to use the esp-netif API instead.

ESP-NETIF architecture

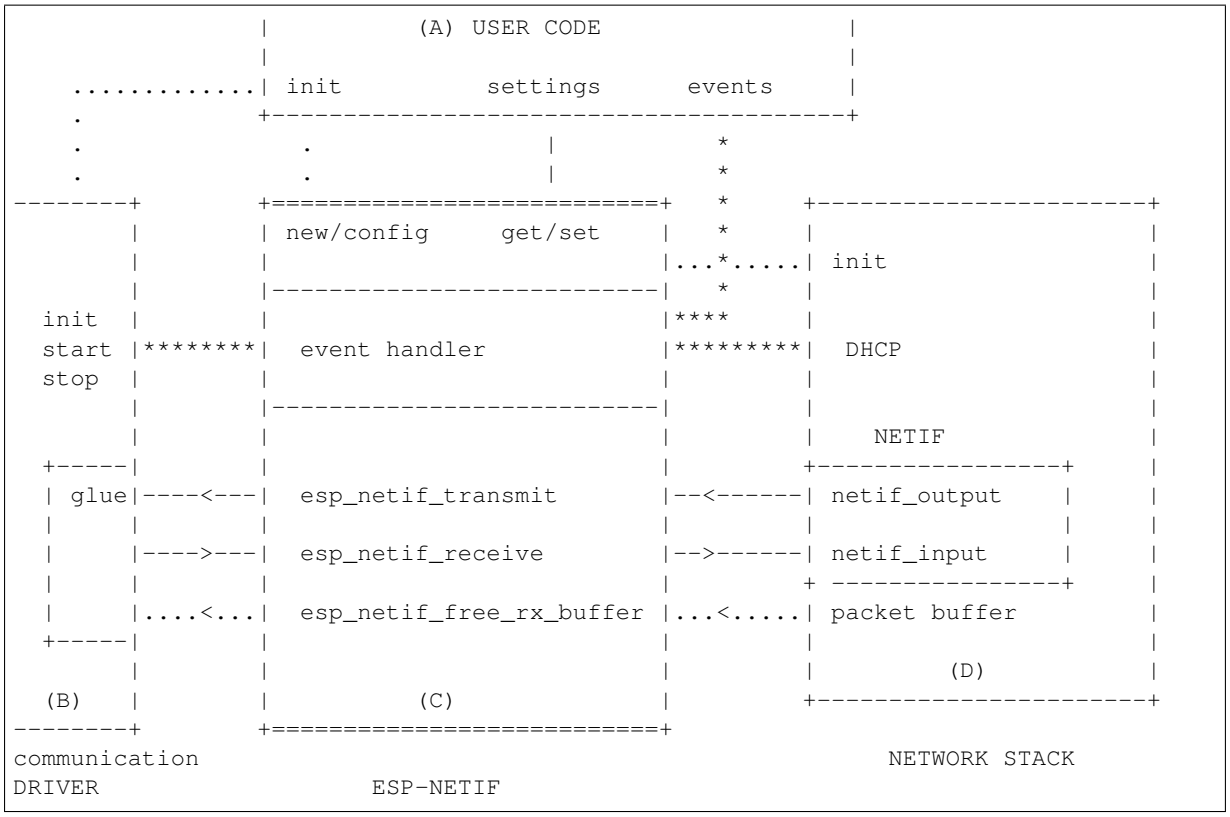

Data and event flow in the diagram

- `.....` Initialization line from user code to ESP-NETIF and communication driver
- `--<--->--` Data packets going from communication media to TCP/IP stack and back
- `********` Events aggregated in ESP-NETIF propagates to driver, user code and network stack
- `|` User settings and runtime configuration

ESP-NETIF interaction

A) User code, boiler plate Overall application interaction with a specific IO driver for communication media and configured TCP/IP network stack is abstracted using ESP-NETIF APIs and outlined as below:

A) Initialization code

1) Initializes IO driver
2) Creates a new instance of ESP-NETIF and configure with

- ESP-NETIF specific options (flags, behaviour, name)
- Network stack options (netif init and input functions, not publicly available)
- IO driver specific options (transmit, free rx buffer functions, IO driver handle)

3) Attaches the IO driver handle to the ESP-NETIF instance created in the above steps
4) Configures event handlers

- use default handlers for common interfaces defined in IO drivers; or define a specific handlers for customised behaviour/new interfaces
- register handlers for app related events (such as IP lost/acquired)

B) Interaction with network interfaces using ESP-NETIF API

- Getting and setting TCP/IP related parameters (DHCP, IP, etc)
- Receiving IP events (connect/disconnect)

- Controlling application lifecycle (set interface up/down)

B) Communication driver, IO driver, media driver Communication driver plays these two important roles in relation with ESP-NETIF:

1) Event handlers: Define behaviour patterns of interaction with ESP-NETIF (for example: ethernet link-up -> turn netif on)
2) Glue IO layer: Adapts the input/output functions to use ESP-NETIF transmit, receive and free receive buffer

- Installs driver_transmit to appropriate ESP-NETIF object, so that outgoing packets from network stack are passed to the IO driver
- Calls `esp_netif_receive()` to pass incoming data to network stack

C) ESP-NETIF, former tcpip_adapter ESP-NETIF is an intermediary between an IO driver and a network stack, connecting packet data path between these two. As that it provides a set of interfaces for attaching a driver to ESP-NETIF object (runtime) and configuring a network stack (compile time). In addition to that a set of API is provided to control network interface lifecycle and its TCP/IP properties. As an overview, the ESP-NETIF public interface could be divided into these 6 groups:

1) Initialization APIs (to create and configure ESP-NETIF instance)
2) Input/Output API (for passing data between IO driver and network stack)
3) Event or Action API

- Used for network interface lifecycle management
- ESP-NETIF provides building blocks for designing event handlers

4) Setters and Getters for basic network interface properties
5) Network stack abstraction: enabling user interaction with TCP/IP stack

- Set interface up or down
- DHCP server and client API
- DNS API

6) Driver conversion utilities

D) Network stack Network stack has no public interaction with application code with regard to public interfaces and shall be fully abstracted by ESP-NETIF API.

ESP-NETIF programmer's manual Please refer to the example section for basic initialization of default interfaces:

- WiFi Station: wifi/getting_started/station/main/station_example_main.c
- WiFi Access Point: wifi/getting_started/softAP/main/softap_example_main.c
- Ethernet: ethernet/basic/main/ethernet_example_main.c

For more specific cases please consult this guide: *ESP-NETIF Custom I/O Driver*.

WiFi default initialization The initialization code as well as registering event handlers for default interfaces, such as softAP and station, are provided in two separate APIs to facilitate simple startup code for most applications:

- `esp_netif_create_default_wifi_ap()`
- `esp_netif_create_default_wifi_sta()`

Please note that these functions return the `esp_netif` handle, i.e. a pointer to a network interface object allocated and configured with default settings, which as a consequence, means that:

- The created object has to be destroyed if a network de-initialization is provided by an application.
- These *default* interfaces must not be created multiple times, unless the created handle is deleted using `esp_netif_destroy()`.
- When using Wifi in `AP+STA` mode, both these interfaces has to be created.

API Reference

Header File

- esp_netif/include/esp_netif.h

Functions

esp_err_t **esp_netif_init**(void)

Initialize the underlying TCP/IP stack.

Return
- ESP_OK on success
- ESP_FAIL if initializing failed

Note This function should be called exactly once from application code, when the application starts up.

esp_err_t **esp_netif_deinit**(void)

Deinitialize the esp-netif component (and the underlying TCP/IP stack)

Note: Deinitialization is not supported yet

Return
- ESP_ERR_INVALID_STATE if esp_netif not initialized
- ESP_ERR_NOT_SUPPORTED otherwise

esp_netif_t ***esp_netif_new**(**const** esp_netif_config_t **esp_netif_config*)

Creates an instance of new esp-netif object based on provided config.

Return
- pointer to esp-netif object on success
- NULL otherwise

Parameters
- `[in] esp_netif_config`: pointer esp-netif configuration

void **esp_netif_destroy**(esp_netif_t **esp_netif*)

Destroys the esp_netif object.

Parameters
- `[in] esp_netif`: pointer to the object to be deleted

esp_err_t **esp_netif_set_driver_config**(esp_netif_t **esp_netif*, **const** esp_netif_driver_ifconfig_t **driver_config*)

Configures driver related options of esp_netif object.

Return
- ESP_OK on success
- ESP_ERR_ESP_NETIF_INVALID_PARAMS if invalid parameters provided

Parameters
- `[inout] esp_netif`: pointer to the object to be configured
- `[in] driver_config`: pointer esp-netif io driver related configuration

esp_err_t **esp_netif_attach**(esp_netif_t **esp_netif*, esp_netif_iodriver_handle *driver_handle*)

Attaches esp_netif instance to the io driver handle.

Calling this function enables connecting specific esp_netif object with already initialized io driver to update esp_netif object with driver specific configuration (i.e. calls post_attach callback, which typically sets io driver callbacks to esp_netif instance and starts the driver)

Return
- ESP_OK on success
- ESP_ERR_ESP_NETIF_DRIVER_ATTACH_FAILED if driver' s pot_attach callback failed

Parameters
- `[inout] esp_netif`: pointer to esp_netif object to be attached
- `[in] driver_handle`: pointer to the driver handle

esp_err_t **esp_netif_receive**(esp_netif_t *esp_netif, void *buffer, size_t len, void *eb)
Passes the raw packets from communication media to the appropriate TCP/IP stack.

This function is called from the configured (peripheral) driver layer. The data are then forwarded as frames to the TCP/IP stack.

Return
- ESP_OK

Parameters
- `[in] esp_netif`: Handle to esp-netif instance
- `[in] buffer`: Received data
- `[in] len`: Length of the data frame
- `[in] eb`: Pointer to internal buffer (used in Wi-Fi driver)

void **esp_netif_action_start**(void *esp_netif, *esp_event_base_t* base, int32_t event_id, void *data)
Default building block for network interface action upon IO driver start event Creates network interface, if AUTOUP enabled turns the interface on, if DHCPS enabled starts dhcp server.

Note This API can be directly used as event handler

Parameters
- `[in] esp_netif`: Handle to esp-netif instance
- `base`:
- `event_id`:
- `data`:

void **esp_netif_action_stop**(void *esp_netif, *esp_event_base_t* base, int32_t event_id, void *data)
Default building block for network interface action upon IO driver stop event.

Note This API can be directly used as event handler

Parameters
- `[in] esp_netif`: Handle to esp-netif instance
- `base`:
- `event_id`:
- `data`:

void **esp_netif_action_connected**(void *esp_netif, *esp_event_base_t* base, int32_t event_id, void *data)
Default building block for network interface action upon IO driver connected event.

Note This API can be directly used as event handler

Parameters
- `[in] esp_netif`: Handle to esp-netif instance
- `base`:
- `event_id`:
- `data`:

void **esp_netif_action_disconnected**(void *esp_netif, *esp_event_base_t* base, int32_t event_id, void *data)
Default building block for network interface action upon IO driver disconnected event.

Note This API can be directly used as event handler

Parameters
- `[in] esp_netif`: Handle to esp-netif instance
- `base`:
- `event_id`:
- `data`:

void **esp_netif_action_got_ip**(void *esp_netif, *esp_event_base_t* base, int32_t event_id, void *data)
Default building block for network interface action upon network got IP event.

Note This API can be directly used as event handler

Parameters
- `[in] esp_netif`: Handle to esp-netif instance
- `base`:

- `event_id`:
- `data`:

esp_err_t **esp_netif_set_mac**(esp_netif_t **esp_netif*, uint8_t *mac*[])
Set the mac address for the interface instance.

Return
- ESP_OK - success
- ESP_ERR_ESP_NETIF_IF_NOT_READY - interface status error
- ESP_ERR_NOT_SUPPORTED - mac not supported on this interface

Parameters
- `[in] esp_netif`: Handle to esp-netif instance
- `[in] mac`: Desired mac address for the related network interface

esp_err_t **esp_netif_get_mac**(esp_netif_t **esp_netif*, uint8_t *mac*[])
Get the mac address for the interface instance.

Return
- ESP_OK - success
- ESP_ERR_ESP_NETIF_IF_NOT_READY - interface status error
- ESP_ERR_NOT_SUPPORTED - mac not supported on this interface

Parameters
- `[in] esp_netif`: Handle to esp-netif instance
- `[out] mac`: Resultant mac address for the related network interface

esp_err_t **esp_netif_set_hostname**(esp_netif_t **esp_netif*, **const** char **hostname*)
Set the hostname of an interface.

The configured hostname overrides the default configuration value CONFIG_LWIP_LOCAL_HOSTNAME. Please note that when the hostname is altered after interface started/connected the changes would only be reflected once the interface restarts/reconnects

Return
- ESP_OK - success
- ESP_ERR_ESP_NETIF_IF_NOT_READY - interface status error
- ESP_ERR_ESP_NETIF_INVALID_PARAMS - parameter error

Parameters
- `[in] esp_netif`: Handle to esp-netif instance
- `[in] hostname`: New hostname for the interface. Maximum length 32 bytes.

esp_err_t **esp_netif_get_hostname**(esp_netif_t **esp_netif*, **const** char ***hostname*)
Get interface hostname.

Return
- ESP_OK - success
- ESP_ERR_ESP_NETIF_IF_NOT_READY - interface status error
- ESP_ERR_ESP_NETIF_INVALID_PARAMS - parameter error

Parameters
- `[in] esp_netif`: Handle to esp-netif instance
- `[out] hostname`: Returns a pointer to the hostname. May be NULL if no hostname is set. If set non-NULL, pointer remains valid (and string may change if the hostname changes).

bool **esp_netif_is_netif_up**(esp_netif_t **esp_netif*)
Test if supplied interface is up or down.

Return
- true - Interface is up
- false - Interface is down

Parameters
- `[in] esp_netif`: Handle to esp-netif instance

esp_err_t **esp_netif_get_ip_info**(esp_netif_t **esp_netif*, esp_netif_ip_info_t **ip_info*)
Get interface' s IP address information.

If the interface is up, IP information is read directly from the TCP/IP stack. If the interface is down, IP information is read from a copy kept in the ESP-NETIF instance

Return
- ESP_OK
- ESP_ERR_ESP_NETIF_INVALID_PARAMS

Parameters
- `[in] esp_netif`: Handle to esp-netif instance
- `[out] ip_info`: If successful, IP information will be returned in this argument.

esp_err_t **esp_netif_get_old_ip_info**(esp_netif_t *esp_netif, esp_netif_ip_info_t *ip_info)

Get interface's old IP information.

Returns an "old" IP address previously stored for the interface when the valid IP changed.

If the IP lost timer has expired (meaning the interface was down for longer than the configured interval) then the old IP information will be zero.

Return
- ESP_OK
- ESP_ERR_ESP_NETIF_INVALID_PARAMS

Parameters
- `[in] esp_netif`: Handle to esp-netif instance
- `[out] ip_info`: If successful, IP information will be returned in this argument.

esp_err_t **esp_netif_set_ip_info**(esp_netif_t *esp_netif, **const** esp_netif_ip_info_t *ip_info)

Set interface's IP address information.

This function is mainly used to set a static IP on an interface.

If the interface is up, the new IP information is set directly in the TCP/IP stack.

The copy of IP information kept in the ESP-NETIF instance is also updated (this copy is returned if the IP is queried while the interface is still down.)

Note DHCP client/server must be stopped (if enabled for this interface) before setting new IP information.

Note Calling this interface for may generate a SYSTEM_EVENT_STA_GOT_IP or SYSTEM_EVENT_ETH_GOT_IP event.

Return
- ESP_OK
- ESP_ERR_ESP_NETIF_INVALID_PARAMS
- ESP_ERR_ESP_NETIF_DHCP_NOT_STOPPED If DHCP server or client is still running

Parameters
- `[in] esp_netif`: Handle to esp-netif instance
- `[in] ip_info`: IP information to set on the specified interface

esp_err_t **esp_netif_set_old_ip_info**(esp_netif_t *esp_netif, **const** esp_netif_ip_info_t *ip_info)

Set interface old IP information.

This function is called from the DHCP client (if enabled), before a new IP is set. It is also called from the default handlers for the SYSTEM_EVENT_STA_CONNECTED and SYSTEM_EVENT_ETH_CONNECTED events.

Calling this function stores the previously configured IP, which can be used to determine if the IP changes in the future.

If the interface is disconnected or down for too long, the "IP lost timer" will expire (after the configured interval) and set the old IP information to zero.

Return
- ESP_OK
- ESP_ERR_ESP_NETIF_INVALID_PARAMS

Parameters
- `[in] esp_netif`: Handle to esp-netif instance
- `[in] ip_info`: Store the old IP information for the specified interface

int **esp_netif_get_netif_impl_index**(esp_netif_t *_esp_netif_)
Get net interface index from network stack implementation.

Note This index could be used in `setsockopt()` to bind socket with multicast interface
Return implementation specific index of interface represented with supplied esp_netif
Parameters
- `[in] esp_netif`: Handle to esp-netif instance

esp_err_t **esp_netif_get_netif_impl_name**(esp_netif_t *_esp_netif_, char *_name_)
Get net interface name from network stack implementation.

Note This name could be used in `setsockopt()` to bind socket with appropriate interface
Return
- ESP_OK
- ESP_ERR_ESP_NETIF_INVALID_PARAMS

Parameters
- `[in] esp_netif`: Handle to esp-netif instance
- `[out] name`: Interface name as specified in underlying TCP/IP stack. Note that the actual name will be copied to the specified buffer, which must be allocated to hold maximum interface name size (6 characters for lwIP)

esp_err_t **esp_netif_dhcps_option**(esp_netif_t *_esp_netif_, esp_netif_dhcp_option_mode_t _opt_op_, esp_netif_dhcp_option_id_t _opt_id_, void *_opt_val_, uint32_t _opt_len_)
Set or Get DHCP server option.

Return
- ESP_OK
- ESP_ERR_ESP_NETIF_INVALID_PARAMS
- ESP_ERR_ESP_NETIF_DHCP_ALREADY_STOPPED
- ESP_ERR_ESP_NETIF_DHCP_ALREADY_STARTED

Parameters
- `[in] esp_netif`: Handle to esp-netif instance
- `[in] opt_op`: ESP_NETIF_OP_SET to set an option, ESP_NETIF_OP_GET to get an option.
- `[in] opt_id`: Option index to get or set, must be one of the supported enum values.
- `[inout] opt_val`: Pointer to the option parameter.
- `[in] opt_len`: Length of the option parameter.

esp_err_t **esp_netif_dhcpc_option**(esp_netif_t *_esp_netif_, esp_netif_dhcp_option_mode_t _opt_op_, esp_netif_dhcp_option_id_t _opt_id_, void *_opt_val_, uint32_t _opt_len_)
Set or Get DHCP client option.

Return
- ESP_OK
- ESP_ERR_ESP_NETIF_INVALID_PARAMS
- ESP_ERR_ESP_NETIF_DHCP_ALREADY_STOPPED
- ESP_ERR_ESP_NETIF_DHCP_ALREADY_STARTED

Parameters
- `[in] esp_netif`: Handle to esp-netif instance
- `[in] opt_op`: ESP_NETIF_OP_SET to set an option, ESP_NETIF_OP_GET to get an option.
- `[in] opt_id`: Option index to get or set, must be one of the supported enum values.
- `[inout] opt_val`: Pointer to the option parameter.
- `[in] opt_len`: Length of the option parameter.

esp_err_t **esp_netif_dhcpc_start**(esp_netif_t *_esp_netif_)
Start DHCP client (only if enabled in interface object)

Note The default event handlers for the SYSTEM_EVENT_STA_CONNECTED and SYSTEM_EVENT_ETH_CONNECTED events call this function.
Return
- ESP_OK
- ESP_ERR_ESP_NETIF_INVALID_PARAMS

- ESP_ERR_ESP_NETIF_DHCP_ALREADY_STARTED
- ESP_ERR_ESP_NETIF_DHCPC_START_FAILED

Parameters

- `[in] esp_netif`: Handle to esp-netif instance

esp_err_t **esp_netif_dhcpc_stop**(esp_netif_t *esp_netif*)

Stop DHCP client (only if enabled in interface object)

Note Calling action_netif_stop() will also stop the DHCP Client if it is running.

Return

- ESP_OK
- ESP_ERR_ESP_NETIF_INVALID_PARAMS
- ESP_ERR_ESP_NETIF_DHCP_ALREADY_STOPPED
- ESP_ERR_ESP_NETIF_IF_NOT_READY

Parameters

- `[in] esp_netif`: Handle to esp-netif instance

esp_err_t **esp_netif_dhcpc_get_status**(esp_netif_t *esp_netif*, esp_netif_dhcp_status_t *status*)

Get DHCP client status.

Return

- ESP_OK

Parameters

- `[in] esp_netif`: Handle to esp-netif instance
- `[out] status`: If successful, the status of DHCP client will be returned in this argument.

esp_err_t **esp_netif_dhcps_get_status**(esp_netif_t *esp_netif*, esp_netif_dhcp_status_t *status*)

Get DHCP Server status.

Return

- ESP_OK

Parameters

- `[in] esp_netif`: Handle to esp-netif instance
- `[out] status`: If successful, the status of the DHCP server will be returned in this argument.

esp_err_t **esp_netif_dhcps_start**(esp_netif_t *esp_netif*)

Start DHCP server (only if enabled in interface object)

Return

- ESP_OK
- ESP_ERR_ESP_NETIF_INVALID_PARAMS
- ESP_ERR_ESP_NETIF_DHCP_ALREADY_STARTED

Parameters

- `[in] esp_netif`: Handle to esp-netif instance

esp_err_t **esp_netif_dhcps_stop**(esp_netif_t *esp_netif*)

Stop DHCP server (only if enabled in interface object)

Return

- ESP_OK
- ESP_ERR_ESP_NETIF_INVALID_PARAMS
- ESP_ERR_ESP_NETIF_DHCP_ALREADY_STOPPED
- ESP_ERR_ESP_NETIF_IF_NOT_READY

Parameters

- `[in] esp_netif`: Handle to esp-netif instance

esp_err_t **esp_netif_set_dns_info**(esp_netif_t *esp_netif*, esp_netif_dns_type_t *type*, esp_netif_dns_info_t *dns*)

Set DNS Server information.

This function behaves differently if DHCP server or client is enabled

If DHCP client is enabled, main and backup DNS servers will be updated automatically from the DHCP lease if the relevant DHCP options are set. Fallback DNS Server is never updated from the DHCP lease and is designed to be set via this API. If DHCP client is disabled, all DNS server types can be set via this API only.

If DHCP server is enabled, the Main DNS Server setting is used by the DHCP server to provide a DNS Server option to DHCP clients (Wi-Fi stations).

- The default Main DNS server is typically the IP of the DHCP server itself.
- This function can override it by setting server type ESP_NETIF_DNS_MAIN.
- Other DNS Server types are not supported for the DHCP server.
- To propagate the DNS info to client, please stop the DHCP server before using this API.

Return

- ESP_OK on success
- ESP_ERR_ESP_NETIF_INVALID_PARAMS invalid params

Parameters

- `[in] esp_netif`: Handle to esp-netif instance
- `[in] type`: Type of DNS Server to set: ESP_NETIF_DNS_MAIN, ESP_NETIF_DNS_BACKUP, ESP_NETIF_DNS_FALLBACK
- `[in] dns`: DNS Server address to set

esp_err_t **esp_netif_get_dns_info**(esp_netif_t **esp_netif*, esp_netif_dns_type_t *type*, esp_netif_dns_info_t **dns*)

Get DNS Server information.

Return the currently configured DNS Server address for the specified interface and Server type.

This may be result of a previous call to *esp_netif_set_dns_info()*. If the interface's DHCP client is enabled, the Main or Backup DNS Server may be set by the current DHCP lease.

Return

- ESP_OK on success
- ESP_ERR_ESP_NETIF_INVALID_PARAMS invalid params

Parameters

- `[in] esp_netif`: Handle to esp-netif instance
- `[in] type`: Type of DNS Server to get: ESP_NETIF_DNS_MAIN, ESP_NETIF_DNS_BACKUP, ESP_NETIF_DNS_FALLBACK
- `[out] dns`: DNS Server result is written here on success

esp_err_t **esp_netif_create_ip6_linklocal**(esp_netif_t **esp_netif*)

Create interface link-local IPv6 address.

Cause the TCP/IP stack to create a link-local IPv6 address for the specified interface.

This function also registers a callback for the specified interface, so that if the link-local address becomes verified as the preferred address then a SYSTEM_EVENT_GOT_IP6 event will be sent.

Return

- ESP_OK
- ESP_ERR_ESP_NETIF_INVALID_PARAMS

Parameters

- `[in] esp_netif`: Handle to esp-netif instance

esp_err_t **esp_netif_get_ip6_linklocal**(esp_netif_t **esp_netif*, esp_ip6_addr_t **if_ip6*)

Get interface link-local IPv6 address.

If the specified interface is up and a preferred link-local IPv6 address has been created for the interface, return a copy of it.

Return

- ESP_OK
- ESP_FAIL If interface is down, does not have a link-local IPv6 address, or the link-local IPv6 address is not a preferred address.

Parameters

- `[in] esp_netif`: Handle to esp-netif instance
- `[out] if_ip6`: IPv6 information will be returned in this argument if successful.

esp_err_t **esp_netif_get_ip6_global**(esp_netif_t **esp_netif*, esp_ip6_addr_t **if_ip6*)

Get interface global IPv6 address.

If the specified interface is up and a preferred global IPv6 address has been created for the interface, return a copy of it.

Return
- ESP_OK
- ESP_FAIL If interface is down, does not have a global IPv6 address, or the global IPv6 address is not a preferred address.

Parameters
- `[in] esp_netif`: Handle to esp-netif instance
- `[out] if_ip6`: IPv6 information will be returned in this argument if successful.

int **esp_netif_get_all_ip6**(esp_netif_t *_esp_netif_, esp_ip6_addr_t _if_ip6_[])
Get all IPv6 addresses of the specified interface.

Return number of returned IPv6 addresses

Parameters
- `[in] esp_netif`: Handle to esp-netif instance
- `[out] if_ip6`: Array of IPv6 addresses will be copied to the argument

void **esp_netif_set_ip4_addr**(esp_ip4_addr_t *_addr_, uint8_t _a_, uint8_t _b_, uint8_t _c_, uint8_t _d_)
Sets IPv4 address to the specified octets.

Parameters
- `[out] addr`: IP address to be set
- `a`: the first octet (127 for IP 127.0.0.1)
- `b`:
- `c`:
- `d`:

char ***esp_ip4addr_ntoa**(**const** esp_ip4_addr_t *_addr_, char *_buf_, int _buflen_)
Converts numeric IP address into decimal dotted ASCII representation.

Return either pointer to buf which now holds the ASCII representation of addr or NULL if buf was too small

Parameters
- `addr`: ip address in network order to convert
- `buf`: target buffer where the string is stored
- `buflen`: length of buf

uint32_t **esp_ip4addr_aton**(**const** char *_addr_)
Ascii internet address interpretation routine The value returned is in network order.

Return ip address in network order

Parameters
- `addr`: IP address in ascii representation (e.g. “127.0.0.1”)

esp_err_t **esp_netif_str_to_ip4**(**const** char *_src_, esp_ip4_addr_t *_dst_)
Converts Ascii internet IPv4 address into esp_ip4_addr_t.

Return
- ESP_OK on success
- ESP_FAIL if conversion failed
- ESP_ERR_INVALID_ARG if invalid parameter is passed into

Parameters
- `[in] src`: IPv4 address in ascii representation (e.g. “127.0.0.1”)
- `[out] dst`: Address of the target esp_ip4_addr_t structure to receive converted address

esp_err_t **esp_netif_str_to_ip6**(**const** char *_src_, esp_ip6_addr_t *_dst_)
Converts Ascii internet IPv6 address into esp_ip4_addr_t Zeros in the IP address can be stripped or completely ommited: “2001:db8:85a3:0:0:0:2:1” or “2001:db8::2:1”)

Return
- ESP_OK on success
- ESP_FAIL if conversion failed
- ESP_ERR_INVALID_ARG if invalid parameter is passed into

Parameters

- `[in] src`: IPv6 address in ascii representation (e.g. “2001:0db8:85a3:0000:0000:0000:0002:0001”)
- `[out] dst`: Address of the target esp_ip6_addr_t structure to receive converted address

esp_netif_iodriver_handle **esp_netif_get_io_driver**(esp_netif_t *_esp_netif_)

Gets media driver handle for this esp-netif instance.

Return opaque pointer of related IO driver

Parameters

- `[in] esp_netif`: Handle to esp-netif instance

esp_netif_t ***esp_netif_get_handle_from_ifkey**(**const** char *_if_key_)

Searches over a list of created objects to find an instance with supplied if key.

Return Handle to esp-netif instance

Parameters

- `if_key`: Textual description of network interface

esp_netif_flags_t **esp_netif_get_flags**(esp_netif_t *_esp_netif_)

Returns configured flags for this interface.

Return Configuration flags

Parameters

- `[in] esp_netif`: Handle to esp-netif instance

const char ***esp_netif_get_ifkey**(esp_netif_t *_esp_netif_)

Returns configured interface key for this esp-netif instance.

Return Textual description of related interface

Parameters

- `[in] esp_netif`: Handle to esp-netif instance

const char ***esp_netif_get_desc**(esp_netif_t *_esp_netif_)

Returns configured interface type for this esp-netif instance.

Return Enumerated type of this interface, such as station, AP, ethernet

Parameters

- `[in] esp_netif`: Handle to esp-netif instance

int **esp_netif_get_route_prio**(esp_netif_t *_esp_netif_)

Returns configured routing priority number.

Return Integer representing the instance’s route-prio, or -1 if invalid paramters

Parameters

- `[in] esp_netif`: Handle to esp-netif instance

int32_t **esp_netif_get_event_id**(esp_netif_t *_esp_netif_, esp_netif_ip_event_type_t _event_type_)

Returns configured event for this esp-netif instance and supplied event type.

Return specific event id which is configured to be raised if the interface lost or acquired IP address -1 if supplied event_type is not known

Parameters

- `[in] esp_netif`: Handle to esp-netif instance
- `event_type`: (either get or lost IP)

esp_netif_t ***esp_netif_next**(esp_netif_t *_esp_netif_)

Iterates over list of interfaces. Returns first netif if NULL given as parameter.

Return First netif from the list if supplied parameter is NULL, next one otherwise

Parameters

- `[in] esp_netif`: Handle to esp-netif instance

size_t **esp_netif_get_nr_of_ifs**(void)

Returns number of registered esp_netif objects.

Return Number of esp_netifs

void **esp_netif_netstack_buf_ref**(void *_netstack_buf_)
increase the reference counter of net stack buffer

Parameters
- `[in] netstack_buf`: the net stack buffer

void **esp_netif_netstack_buf_free**(void *_netstack_buf_)
free the netstack buffer

Parameters
- `[in] netstack_buf`: the net stack buffer

Macros

_ESP_NETIF_SUPPRESS_LEGACY_WARNING_

WiFi default API reference

Header File

- esp_wifi/include/esp_wifi_default.h

Functions

esp_err_t **esp_netif_attach_wifi_station**(esp_netif_t *_esp_netif_)
Attaches wifi station interface to supplied netif.

Return
- ESP_OK on success
- ESP_FAIL if attach failed

Parameters
- `esp_netif`: instance to attach the wifi station to

esp_err_t **esp_netif_attach_wifi_ap**(esp_netif_t *_esp_netif_)
Attaches wifi soft AP interface to supplied netif.

Return
- ESP_OK on success
- ESP_FAIL if attach failed

Parameters
- `esp_netif`: instance to attach the wifi AP to

esp_err_t **esp_wifi_set_default_wifi_sta_handlers**(void)
Sets default wifi event handlers for STA interface.

Return
- ESP_OK on success, error returned from esp_event_handler_register if failed

esp_err_t **esp_wifi_set_default_wifi_ap_handlers**(void)
Sets default wifi event handlers for AP interface.

Return
- ESP_OK on success, error returned from esp_event_handler_register if failed

esp_err_t **esp_wifi_clear_default_wifi_driver_and_handlers**(void *_esp_netif_)
Clears default wifi event handlers for supplied network interface.

Return
- ESP_OK on success, error returned from esp_event_handler_register if failed

Parameters
- `esp_netif`: instance of corresponding if object

esp_netif_t ***esp_netif_create_default_wifi_ap**(void)
Creates default WIFI AP. In case of any init error this API aborts.

Return pointer to esp-netif instance

esp_netif_t *__esp_netif_create_default_wifi_sta__(void)
Creates default WIFI STA. In case of any init error this API aborts.

Return pointer to esp-netif instance

esp_netif_t *__esp_netif_create_wifi__(*wifi_interface_t wifi_if*, esp_netif_inherent_config_t **esp_netif_config*)
Creates esp_netif WiFi object based on the custom configuration.

Attention This API DOES NOT register default handlers!
Return pointer to esp-netif instance
Parameters
- `[in] wifi_if`: type of wifi interface
- `[in] esp_netif_config`: inherent esp-netif configuration pointer

esp_err_t __esp_netif_create_default_wifi_mesh_netifs__(esp_netif_t **p_netif_sta*, esp_netif_t **p_netif_ap*)
Creates default STA and AP network interfaces for esp-mesh.

Both netifs are almost identical to the default station and softAP, but with DHCP client and server disabled. Please note that the DHCP client is typically enabled only if the device is promoted to a root node.

Returns created interfaces which could be ignored setting parameters to NULL if an application code does not need to save the interface instances for further processing.

Return ESP_OK on success
Parameters
- `[out] p_netif_sta`: pointer where the resultant STA interface is saved (if non NULL)
- `[out] p_netif_ap`: pointer where the resultant AP interface is saved (if non NULL)

TCP/IP 适配器迁移指南

TCP/IP 适配器是在 IDF V4.1 之前使用的网络接口抽象组件。本文档概述了从 tcpip_adapter 移出至其后继者*ESP-NETIF* 的过程。

更新网络连接代码

网络软件栈初始化 只需将 `tcpip_adapter_init()` 替换为 `esp_netif_init()`。请注意，*ESP-NETIF* 初始化 API 可返回标准错误代码，还可以使用 `esp_netif_deinit()` 进行去初始化。

此外，还需将 `#include "tcpip_adapter.h"` 替换为 `#include "esp_netif.h"`。

创建网络接口 TCP/IP 适配器静态定义了三个接口：

- Wi-Fi Station
- Wi-Fi AP
- 以太网

网络接口的设计应严格参考*ESP-NETIF*，以使其能够连接到 TCP/IP 软件栈。例如，在 TCP/IP 软件栈和事件循环初始化完成后，Wi-Fi 的初始化代码必须显示调用 `esp_netif_create_default_wifi_sta();` 或 `esp_netif_create_default_wifi_ap();` 。请参阅这三个接口的初始化代码示例：

- Wi-Fi Station: wifi/getting_started/station/main/station_example_main.c
- Wi-Fi AP: wifi/getting_started/softAP/main/softap_example_main.c
- 以太网: ethernet/basic/main/ethernet_example_main.c

更换其他 tcpip_adapter API 所有 tcpip_adapter 函数都有对应的 esp-netif。具体请见 esp_netif 的内容：

- Setters/Getters
- DHCP
- DNS
- IP address

默认事件处理程序 事件处理程序已经从 tcpip_adapter 移动到相应的驱动程序代码。从应用程序的角度来看，这不会带来任何影响，所有事件仍以相同的方式处理。请注意，在与 IP 相关的事件处理程序中，应用程序代码通常以 esp-netif 结构体的形式接收 IP 地址（不是 LwIP 结构，但兼容二进制格式）。这是打印地址的首选方式：

```
ESP_LOGI(TAG, "got ip:" IPSTR "\n", IP2STR(&event->ip_info.ip));
```

而不是

```
ESP_LOGI(TAG, "got ip:%s\n", ip4addr_ntoa(&event->ip_info.ip));
```

由于 `ip4addr_ntoa()` 为 LwIP API，因此 esp-netif 还提供了替代函数 `esp_ip4addr_ntoa()`，但整体而言仍推荐上述方法。

IP 地址 推荐使用 esp-netif 定义的 IP 结构。请注意，在启用默认兼容性时，LwIP 结构体仍然可以工作。
* esp-netif IP address definitions

下一步 为了移植应用程序使其可以使用*ESP-NETIF* 还需完成的步骤包括：在组件配置中禁用 tcpip_adapter 兼容层。方法为：`ESP NETIF Adapter -> Enable backward compatible tcpip_adapter interface`，并检查工程是否编译成功。TCP/IP 适配器涉及大量依赖项，这一步可能有助于将应用程序与使用特定 TCP/IP 软件栈的 API 分离开来。

ESP-NETIF Custom I/O Driver

This section outlines implementing a new I/O driver with esp-netif connection capabilities. By convention the I/O driver has to register itself as an esp-netif driver and thus holds a dependency on esp-netif component and is responsible for providing data path functions, post-attach callback and in most cases also default event handlers to define network interface actions based on driver's lifecycle transitions.

Packet input/output As shown in the diagram, the following three API functions for the packet data path must be defined for connecting with esp-netif:

- *esp_netif_transmit()*
- *esp_netif_free_rx_buffer()*
- *esp_netif_receive()*

The first two functions for transmitting and freeing the rx buffer are provided as callbacks, i.e. they get called from esp-netif (and its underlying TCP/IP stack) and I/O driver provides their implementation.

The receiving function on the other hand gets called from the I/O driver, so that the driver's code simply calls *esp_netif_receive()* on a new data received event.

Post attach callback A final part of the network interface initialization consists of attaching the esp-netif instance to the I/O driver, by means of calling the following API:

```
esp_err_t esp_netif_attach(esp_netif_t *esp_netif, esp_netif_iodriver_handle␣
↪driver_handle);
```

It is assumed that the `esp_netif_iodriver_handle` is a pointer to driver's object, a struct derived from `struct esp_netif_driver_base_s`, so that the first member of I/O driver structure must be this base structure with pointers to

- post-attach function callback
- related esp-netif instance

As a consequence the I/O driver has to create an instance of the struct per below:

```
typedef struct my_netif_driver_s {
        esp_netif_driver_base_t base;           /*!< base structure reserved as␣
↪esp-netif driver */
        driver_impl             *h;             /*!< handle of driver␣
↪implementation */
    } my_netif_driver_t;
```

with actual values of `my_netif_driver_t::base.post_attach` and the actual drivers handle `my_netif_driver_t::h`. So when the *esp_netif_attach()* gets called from the initialization code, the post-attach callback from I/O driver's code gets executed to mutually register callbacks between esp-netif and I/O driver instances. Typically the driver is started as well in the post-attach callback. An example of a simple post-attach callback is outlined below:

```
static esp_err_t my_post_attach_start(esp_netif_t * esp_netif, void * args)
{
    my_netif_driver_t *driver = args;
    const esp_netif_driver_ifconfig_t driver_ifconfig = {
            .driver_free_rx_buffer = my_free_rx_buf,
            .transmit = my_transmit,
            .handle = driver->driver_impl
    };
    driver->base.netif = esp_netif;
    ESP_ERROR_CHECK(esp_netif_set_driver_config(esp_netif, &driver_ifconfig));
    my_driver_start(driver->driver_impl);
    return ESP_OK;
}
```

Default handlers I/O drivers also typically provide default definitions of lifecycle behaviour of related network interfaces based on state transitions of I/O drivers. For example *driver start -> network start*, etc. An example of such a default handler is provided below:

```
esp_err_t my_driver_netif_set_default_handlers(my_netif_driver_t *driver, esp_
↪netif_t * esp_netif)
{
    driver_set_event_handler(driver->driver_impl, esp_netif_action_start, MY_DRV_
↪EVENT_START, esp_netif);
    driver_set_event_handler(driver->driver_impl, esp_netif_action_stop, MY_DRV_
↪EVENT_STOP, esp_netif);
    return ESP_OK;
}
```

Network stack connection The packet data path functions for transmitting and freeing the rx buffer (defined in the I/O driver) are called from the esp-netif, specifically from its TCP/IP stack connecting layer. The following API reference outlines these network stack interaction with the esp-netif.

Header File

- esp_netif/include/esp_netif_net_stack.h

Functions

esp_netif_t ***esp_netif_get_handle_from_netif_impl**(void *dev*)

Returns esp-netif handle.

Return handle to related esp-netif instance

Parameters

- `[in] dev`: opaque ptr to network interface of specific TCP/IP stack

void ***esp_netif_get_netif_impl**(esp_netif_t *esp_netif*)

Returns network stack specific implementation handle (if supported)

Note that it is not supported to acquire PPP netif impl pointer and this function will return NULL for esp_netif instances configured to PPP mode

Return handle to related network stack netif handle

Parameters

- `[in] esp_netif`: Handle to esp-netif instance

esp_err_t **esp_netif_transmit**(esp_netif_t *esp_netif*, void *data, size_t *len*)

Outputs packets from the TCP/IP stack to the media to be transmitted.

This function gets called from network stack to output packets to IO driver.

Return ESP_OK on success, an error passed from the I/O driver otherwise

Parameters

- `[in] esp_netif`: Handle to esp-netif instance
- `[in] data`: Data to be transmitted
- `[in] len`: Length of the data frame

esp_err_t **esp_netif_transmit_wrap**(esp_netif_t *esp_netif*, void *data, size_t *len*, void *netstack_buf*)

Outputs packets from the TCP/IP stack to the media to be transmitted.

This function gets called from network stack to output packets to IO driver.

Return ESP_OK on success, an error passed from the I/O driver otherwise

Parameters

- `[in] esp_netif`: Handle to esp-netif instance
- `[in] data`: Data to be transmitted
- `[in] len`: Length of the data frame
- `[in] netstack_buf`: net stack buffer

void **esp_netif_free_rx_buffer**(void *esp_netif*, void *buffer*)

Free the rx buffer allocated by the media driver.

This function gets called from network stack when the rx buffer to be freed in IO driver context, i.e. to deallocate a buffer owned by io driver (when data packets were passed to higher levels to avoid copying)

Parameters

- `[in] esp_netif`: Handle to esp-netif instance
- `[in] buffer`: Rx buffer pointer

TCP/IP 套接字 API 的示例代码存放在 ESP-IDF 示例项目的 protocols/sockets 目录下。

2.2.4 应用层协议

应用层网络协议（IP 网络层协议之上）的相关文档存放在应用层协议。

2.3 外设 API

2.3.1 Analog to Digital Converter

Overview

The ESP32 integrates two 12-bit SAR (Successive Approximation Register) ADCs, supporting a total of 18 measurement channels (analog enabled pins).

These channels are supported:

ADC1:
- 8 channels: GPIO32 - GPIO39

ADC2:
- 10 channels: GPIO0, GPIO2, GPIO4, GPIO12 - GPIO15, GOIO25 - GPIO27

ADC Limitations

注解:

- Some of the ADC2 pins are used as strapping pins (GPIO 0, 2, 15) thus cannot be used freely. Such is the case in the following official Development Kits:
- *ESP32 DevKitC*: GPIO 0 cannot be used due to external auto program circuits.
- *ESP-WROVER-KIT*: GPIO 0, 2, 4 and 15 cannot be used due to external connections for different purposes.
- Since the ADC2 module is also used by the Wi-Fi, only one of them could get the preemption when using together, which means the `adc2_get_raw()` may get blocked until Wi-Fi stops, and vice versa.

Driver Usage

Each ADC unit supports two work modes, ADC single read mode and ADC continuous (DMA) mode. ADC single read mode is suitable for low-frequency sampling operations. ADC continuous (DMA) read mode is suitable for high-frequency continuous sampling actions.

注解: ADC readings from a pin not connected to any signal are random.

ADC Single Read mode The ADC should be configured before reading is taken.

- For ADC1, configure desired precision and attenuation by calling functions `adc1_config_width()` and `adc1_config_channel_atten()`.
- For ADC2, configure the attenuation by `adc2_config_channel_atten()`. The reading width of ADC2 is configured every time you take the reading.

Attenuation configuration is done per channel, see `adc1_channel_t` and `adc2_channel_t`, set as a parameter of above functions.

Then it is possible to read ADC conversion result with `adc1_get_raw()` and `adc2_get_raw()`. Reading width of ADC2 should be set as a parameter of `adc2_get_raw()` instead of in the configuration functions.

It is also possible to read the internal hall effect sensor via ADC1 by calling dedicated function `hall_sensor_read()`. Note that even the hall sensor is internal to ESP32, reading from it uses channels 0 and 3 of ADC1 (GPIO 36 and 39). Do not connect anything else to these pins and do not change their configuration. Otherwise it may affect the measurement of low value signal from the sensor.

This API provides convenient way to configure ADC1 for reading from *ULP*. To do so, call function `adc1_ulp_enable()` and then set precision and attenuation as discussed above.

There is another specific function `adc_vref_to_gpio()` used to route internal reference voltage to a GPIO pin. It comes handy to calibrate ADC reading and this is discussed in section *Minimizing Noise*.

注解： See *ADC Limitations* for the limitation of using ADC single read mode.

Application Example

Reading voltage on ADC1 channel 0 (GPIO 36):

```
#include <driver/adc.h>

...

    adc1_config_width(ADC_WIDTH_BIT_12);
    adc1_config_channel_atten(ADC1_CHANNEL_0,ADC_ATTEN_DB_0);
    int val = adc1_get_raw(ADC1_CHANNEL_0);
```

The input voltage in the above example is from 0 to 1.1 V (0 dB attenuation). The input range can be extended by setting a higher attenuation, see *adc_atten_t*. An example of using the ADC driver including calibration (discussed below) is available at esp-idf: peripherals/adc/single_read/adc

Reading voltage on ADC2 channel 7 (GPIO 27):

```
#include <driver/adc.h>

...

    int read_raw;
    adc2_config_channel_atten( ADC2_CHANNEL_7, ADC_ATTEN_0db );

    esp_err_t r = adc2_get_raw( ADC2_CHANNEL_7, ADC_WIDTH_12Bit, &read_raw);
    if ( r == ESP_OK ) {
        printf("%d\n", read_raw );
    } else if ( r == ESP_ERR_TIMEOUT ) {
        printf("ADC2 used by Wi-Fi.\n");
    }
```

The reading may fail due to collision with Wi-Fi, if the return value of this API is `ESP_ERR_INVALID_STATE`, then the reading result is not valid. An example using the ADC2 driver to read the output of DAC is available in esp-idf: peripherals/adc/single_read/adc2

Reading the internal hall effect sensor:

```
#include <driver/adc.h>

...

    adc1_config_width(ADC_WIDTH_BIT_12);
    int val = hall_sensor_read();
```

The value read in both these examples is 12 bits wide (range 0-4095).

Minimizing Noise

The ESP32 ADC can be sensitive to noise leading to large discrepancies in ADC readings. To minimize noise, users may connect a 0.1 µF capacitor to the ADC input pad in use. Multisampling may also be used to further mitigate the effects of noise.

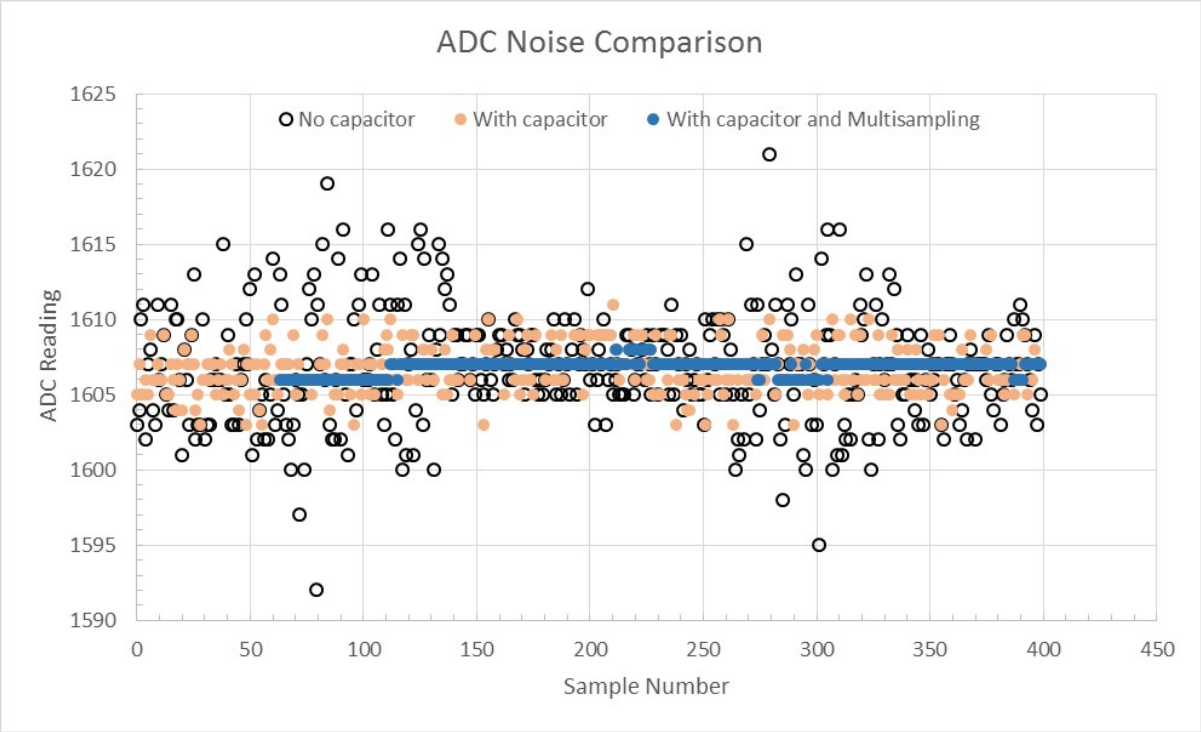

图 4: Graph illustrating noise mitigation using capacitor and multisampling of 64 samples.

ADC Calibration

The esp_adc_cal/include/esp_adc_cal.h API provides functions to correct for differences in measured voltages caused by variation of ADC reference voltages (Vref) between chips. Per design the ADC reference voltage is 1100 mV, however the true reference voltage can range from 1000 mV to 1200 mV amongst different ESP32s.

Correcting ADC readings using this API involves characterizing one of the ADCs at a given attenuation to obtain a characteristics curve (ADC-Voltage curve) that takes into account the difference in ADC reference voltage. The characteristics curve is in the form of `y = coeff_a * x + coeff_b` and is used to convert ADC readings to voltages in mV. Calculation of the characteristics curve is based on calibration values which can be stored in eFuse or provided by the user.

Calibration Values Calibration values are used to generate characteristic curves that account for the variation of ADC reference voltage of a particular ESP32 chip. There are currently 3 source(s) of calibration values on ESP32. The availability of these calibration values will depend on the type and production date of the ESP32 chip/module.

- **Two Point** values represent each of the ADCs' readings at 150 mV and 850 mV. To obtain more accurate calibration results these values should be measured by user and burned into eFuse `BLOCK3`.
- **eFuse Vref** represents the true ADC reference voltage. This value is measured and burned into eFuse `BLOCK0` during factory calibration.
- **Default Vref** is an estimate of the ADC reference voltage provided by the user as a parameter during characterization. If Two Point or eFuse Vref values are unavailable, **Default Vref** will be used.

  Individual measurement and burning of the **eFuse Vref** has been applied to ESP32-D0WD and ESP32-D0WDQ6 chips produced on/after the 1st week of 2018. Such chips may be recognized by date codes on/later than 012018 (see Line 4 on figure below).

  If you would like to purchase chips or modules with calibration, double check with distributor or Espressif (sales@espressif.com) directly.

  If you are unable to check the date code (i.e. the chip may be enclosed inside a canned module, etc.), you can still verify if **eFuse Vref** is present by running the espefuse.py tool with `adc_info` parameter

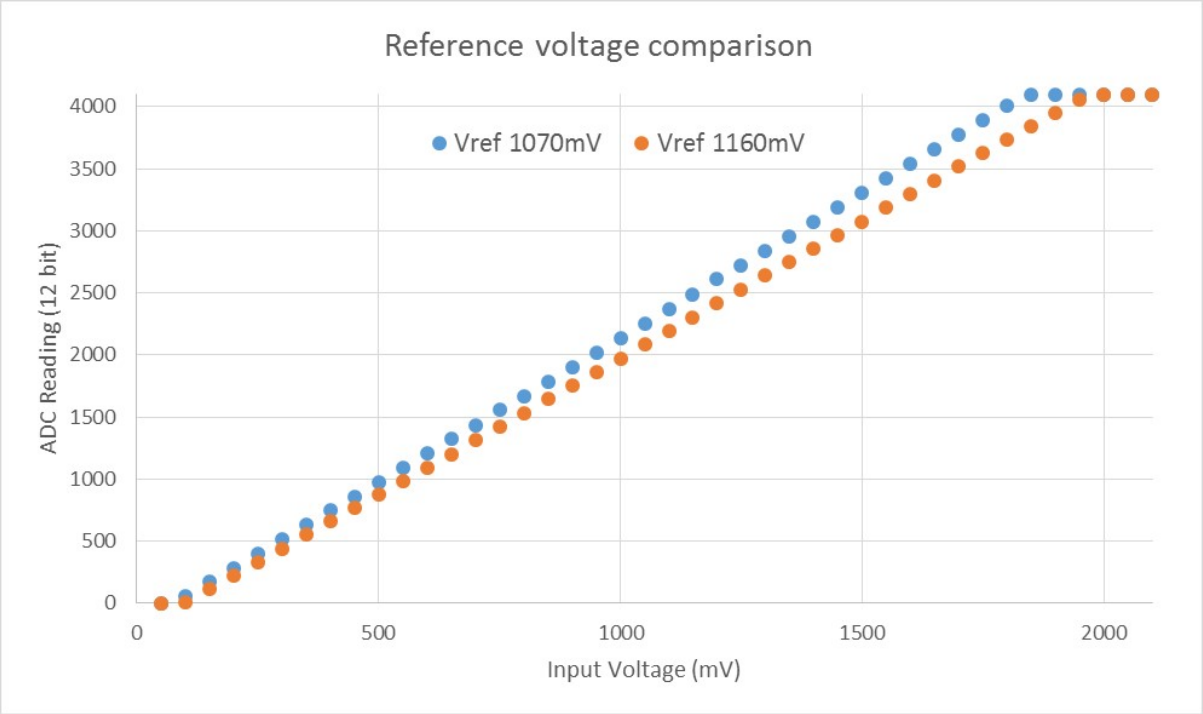

图 5: Graph illustrating effect of differing reference voltages on the ADC voltage curve.

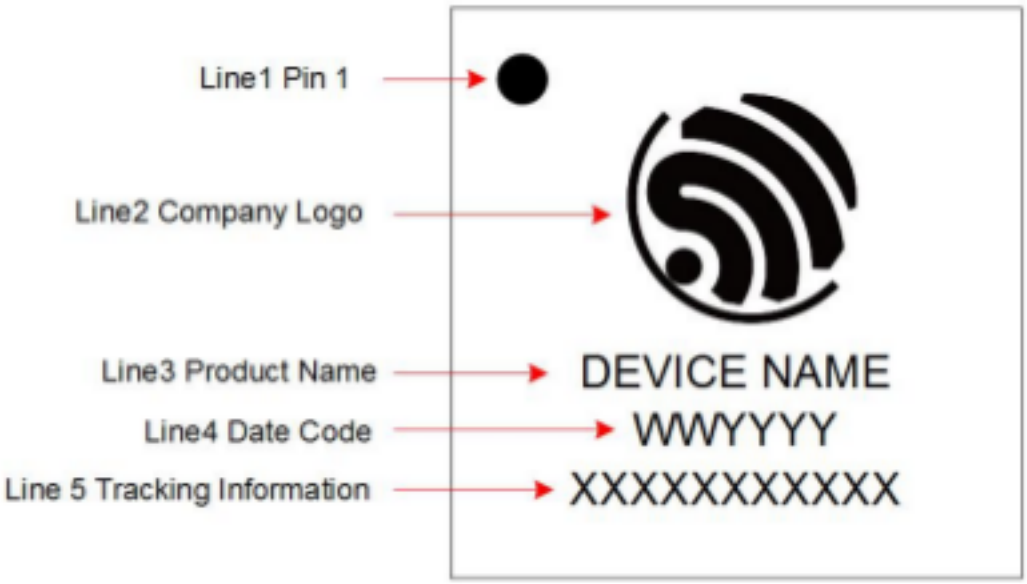

图 6: ESP32 Chip Surface Marking

```
$IDF_PATH/components/esptool_py/esptool/espefuse.py --port /dev/
↪ttyUSB0 adc_info
```

Replace `/dev/ttyUSB0` with ESP32 board' s port name.
A chip that has specific **eFuse Vref** value programmed (in this case 1093 mV) will be reported as follows:

```
ADC VRef calibration: 1093 mV
```

In another example below the **eFuse Vref** is not programmed:

```
ADC VRef calibration: None (1100 mV nominal)
```

For a chip with two point calibration the message will look similar to:

```
ADC VRef calibration: 1149 mV
ADC readings stored in efuse BLK3:
    ADC1 Low reading  (150 mV): 306
    ADC1 High reading (850 mV): 3153
    ADC2 Low reading  (150 mV): 389
    ADC2 High reading (850 mV): 3206
```

Application Extensions

For a full example see esp-idf: peripherals/adc/single_read

Characterizing an ADC at a particular attenuation:

```
#include "driver/adc.h"
#include "esp_adc_cal.h"

...

    //Characterize ADC at particular atten
    esp_adc_cal_characteristics_t *adc_chars = calloc(1, sizeof(esp_adc_cal_
↪characteristics_t));
    esp_adc_cal_value_t val_type = esp_adc_cal_characterize(unit, atten, ADC_WIDTH_
↪BIT_12, DEFAULT_VREF, adc_chars);
    //Check type of calibration value used to characterize ADC
    if (val_type == ESP_ADC_CAL_VAL_EFUSE_VREF) {
        printf("eFuse Vref");
    } else if (val_type == ESP_ADC_CAL_VAL_EFUSE_TP) {
        printf("Two Point");
    } else {
        printf("Default");
    }
```

Reading an ADC then converting the reading to a voltage:

```
#include "driver/adc.h"
#include "esp_adc_cal.h"

...
    uint32_t reading =  adc1_get_raw(ADC1_CHANNEL_5);
    uint32_t voltage = esp_adc_cal_raw_to_voltage(reading, adc_chars);
```

Routing ADC reference voltage to GPIO, so it can be manually measured (for **Default Vref**):

```
#include "driver/adc.h"

...
```

(下页继续)

(续上页)

```
    esp_err_t status = adc_vref_to_gpio(ADC_UNIT_1, GPIO_NUM_25);
    if (status == ESP_OK) {
        printf("v_ref routed to GPIO\n");
    } else {
        printf("failed to route v_ref\n");
    }
```

GPIO Lookup Macros

There are macros available to specify the GPIO number of a ADC channel, or vice versa. e.g.

1. `ADC1_CHANNEL_0_GPIO_NUM` is the GPIO number of ADC1 channel 0.
2. `ADC1_GPIOn_CHANNEL` is the ADC1 channel number of GPIO n.

API Reference

This reference covers three components:

- *ADC driver*
- *ADC Calibration*
- *GPIO Lookup Macros*

ADC driver

Header File

- driver/esp32/include/driver/adc.h

Functions

esp_err_t **adc_set_i2s_data_source**(*adc_i2s_source_t src*)

Set I2S data source.

Return

- ESP_OK success

Parameters

- `src`: I2S DMA data source, I2S DMA can get data from digital signals or from ADC.

esp_err_t **adc_i2s_mode_init**(*adc_unit_t adc_unit*, *adc_channel_t channel*)

Initialize I2S ADC mode.

Return

- ESP_OK success
- ESP_ERR_INVALID_ARG Parameter error

Parameters

- `adc_unit`: ADC unit index
- `channel`: ADC channel index

int **hall_sensor_read**(void)

Read Hall Sensor.

Note When the power switch of SARADC1, SARADC2, HALL sensor and AMP sensor is turned on, the input of GPIO36 and GPIO39 will be pulled down for about 80ns. When enabling power for any of these peripherals, ignore input from GPIO36 and GPIO39. Please refer to section 3.11 of 'ECO_and_Workarounds_for_Bugs_in_ESP32' for the description of this issue.

Note The Hall Sensor uses channels 0 and 3 of ADC1. Do not configure these channels for use as ADC channels.

Note The ADC1 module must be enabled by calling adc1_config_width() before calling hall_sensor_read(). ADC1 should be configured for 12 bit readings, as the hall sensor readings are low values and do not cover the full range of the ADC.

Return The hall sensor reading.

Header File

- hal/include/hal/adc_types.h

Structures

struct adc_digi_pattern_table_t

ADC digital controller (DMA mode) conversion rules setting.

Public Members

uint8_t **atten** : 2

ADC sampling voltage attenuation configuration. Modification of attenuation affects the range of measurements. 0: measurement range 0 - 800mV, 1: measurement range 0 - 1100mV, 2: measurement range 0 - 1350mV, 3: measurement range 0 - 2600mV.

uint8_t **bit_width** : 2

ADC resolution.

- 0: 9 bit;
- 1: 10 bit;
- 2: 11 bit;
- 3: 12 bit.

int8_t **channel** : 4

ADC channel index.

uint8_t **val**

Raw data value

struct adc_digi_output_data_t

ADC digital controller (DMA mode) output data format. Used to analyze the acquired ADC (DMA) data.

Note ESP32-S2: Member `channel` can be used to judge the validity of the ADC data, because the role of the arbiter may get invalid ADC data.

Public Members

uint16_t **data** : 12

ADC real output data info. Resolution: 12 bit.

ADC real output data info. Resolution: 11 bit.

uint16_t **channel** : 4

ADC channel index info. For ESP32-S2: If (channel < ADC_CHANNEL_MAX), The data is valid. If (channel > ADC_CHANNEL_MAX), The data is invalid.

struct *adc_digi_output_data_t*::**[anonymous]**::**[anonymous] type1**

When the configured output format is 12bit. `ADC_DIGI_FORMAT_12BIT`

uint16_t **unit** : 1

ADC unit index info. 0: ADC1; 1: ADC2.

struct *adc_digi_output_data_t*::**[anonymous]**::**[anonymous] type2**

When the configured output format is 11bit. `ADC_DIGI_FORMAT_11BIT`

uint16_t **val**

Raw data value

struct adc_digi_config_t

CONFIG_IDF_TARGET_ESP32.

ADC digital controller (DMA mode) configuration parameters.

Example setting: When using ADC1 channel0 to measure voltage, the sampling rate is required to be 1 kHz:

sample rate	1 kHz	1 kHz	1 kHz
conv_mode	single	both	alter
adc1_pattern_len	1	1	1
dig_clk.use_apll	0	0	0
dig_clk.div_num	99	99	99
dig_clk.div_b	0	0	0
dig_clk.div_a	0	0	0
interval	400	400	200
`trigger_meas_freq`	1 kHz	1 kHz	2 kHz

Explanation of the relationship between `conv_limit_num`, `dma_eof_num` and the number of DMA outputs:

conv_mode	single	both	alter
trigger meas times	1	1	1
conv_limit_num	+1	+1	+1
dma_eof_num	+1	+2	+1
dma output (byte)	+2	+4	+2

Public Members

bool **conv_limit_en**

Enable the function of limiting ADC conversion times. If the number of ADC conversion trigger count is equal to the `limit_num`, the conversion is stopped.

uint32_t **conv_limit_num**

Set the upper limit of the number of ADC conversion triggers. Range: 1 ~ 255.

uint32_t **adc1_pattern_len**

Pattern table length for digital controller. Range: 0 ~ 16 (0: Don't change the pattern table setting). The pattern table that defines the conversion rules for each SAR ADC. Each table has 16 items, in which channel selection, resolution and attenuation are stored. When the conversion is started, the controller reads conversion rules from the pattern table one by one. For each controller the scan sequence has at most 16 different rules before repeating itself.

uint32_t **adc2_pattern_len**

Refer to `adc1_pattern_len`

adc_digi_pattern_table_t ***adc1_pattern**

Pointer to pattern table for digital controller. The table size defined by `adc1_pattern_len`.

adc_digi_pattern_table_t ***adc2_pattern**

Refer to `adc1_pattern`

adc_digi_convert_mode_t **conv_mode**

ADC conversion mode for digital controller. See `adc_digi_convert_mode_t`.

adc_digi_output_format_t **format**

ADC output data format for digital controller. See `adc_digi_output_format_t`.

Enumerations

enum adc_unit_t

ADC unit enumeration.

Note For ADC digital controller (DMA mode), ESP32 doesn't support `ADC_UNIT_2`, `ADC_UNIT_BOTH`, `ADC_UNIT_ALTER`.

Values:

ADC_UNIT_1 = 1
SAR ADC 1.

ADC_UNIT_2 = 2
SAR ADC 2.

ADC_UNIT_BOTH = 3
SAR ADC 1 and 2.

ADC_UNIT_ALTER = 7
SAR ADC 1 and 2 alternative mode.

ADC_UNIT_MAX

enum adc_channel_t

ADC channels handle. See `adc1_channel_t`, `adc2_channel_t`.

Note For ESP32 ADC1, don't use `ADC_CHANNEL_8`, `ADC_CHANNEL_9`. See `adc1_channel_t`.

Values:

ADC_CHANNEL_0 = 0
ADC channel

ADC_CHANNEL_1
ADC channel

ADC_CHANNEL_2
ADC channel

ADC_CHANNEL_3
ADC channel

ADC_CHANNEL_4
ADC channel

ADC_CHANNEL_5
ADC channel

ADC_CHANNEL_6
ADC channel

ADC_CHANNEL_7
ADC channel

ADC_CHANNEL_8
ADC channel

ADC_CHANNEL_9
ADC channel

ADC_CHANNEL_MAX

enum adc_atten_t

ADC attenuation parameter. Different parameters determine the range of the ADC. See `adc1_config_channel_atten`.

Values:

ADC_ATTEN_DB_0 = 0
No input attenumation, ADC can measure up to approx. 800 mV.

ADC_ATTEN_DB_2_5 = 1
The input voltage of ADC will be attenuated, extending the range of measurement to up to approx. 1100 mV.

ADC_ATTEN_DB_6 = 2
The input voltage of ADC will be attenuated, extending the range of measurement to up to approx. 1350 mV.

ADC_ATTEN_DB_11 = 3
The input voltage of ADC will be attenuated, extending the range of measurement to up to approx. 2600 mV.

ADC_ATTEN_MAX

enum adc_i2s_source_t
ESP32 ADC DMA source selection.

Values:

ADC_I2S_DATA_SRC_IO_SIG = 0
I2S data from GPIO matrix signal

ADC_I2S_DATA_SRC_ADC = 1
I2S data from ADC

ADC_I2S_DATA_SRC_MAX

enum adc_bits_width_t
ADC resolution setting option.

Values:

ADC_WIDTH_BIT_9 = 0
ADC capture width is 9Bit.

ADC_WIDTH_BIT_10 = 1
ADC capture width is 10Bit.

ADC_WIDTH_BIT_11 = 2
ADC capture width is 11Bit.

ADC_WIDTH_BIT_12 = 3
ADC capture width is 12Bit.

ADC_WIDTH_MAX

enum adc_digi_convert_mode_t
ADC digital controller (DMA mode) work mode.

Note The conversion mode affects the sampling frequency: SINGLE_UNIT_1: When the measurement is triggered, only ADC1 is sampled once. SINGLE_UNIT_2: When the measurement is triggered, only ADC2 is sampled once. BOTH_UNIT : When the measurement is triggered, ADC1 and ADC2 are sampled at the same time. ALTER_UNIT : When the measurement is triggered, ADC1 or ADC2 samples alternately.

Values:

ADC_CONV_SINGLE_UNIT_1 = 1
SAR ADC 1.

ADC_CONV_SINGLE_UNIT_2 = 2
SAR ADC 2.

ADC_CONV_BOTH_UNIT = 3
SAR ADC 1 and 2.

ADC_CONV_ALTER_UNIT = 7
SAR ADC 1 and 2 alternative mode.

ADC_CONV_UNIT_MAX

enum adc_digi_output_format_t

ADC digital controller (DMA mode) output data format option.

Values:

ADC_DIGI_FORMAT_12BIT

ADC to DMA data format, [15:12]-channel, [11: 0]-12 bits ADC data (*adc_digi_output_data_t*). Note: For single convert mode.

ADC_DIGI_FORMAT_11BIT

ADC to DMA data format, [15]-adc unit, [14:11]-channel, [10: 0]-11 bits ADC data (*adc_digi_output_data_t*). Note: For multi or alter convert mode.

ADC_DIGI_FORMAT_MAX

Header File

- driver/include/driver/adc_common.h

Functions

void **adc_power_on**(void)

Enable ADC power.

void **adc_power_off**(void)

Power off SAR ADC.

void **adc_power_acquire**(void)

Increment the usage counter for ADC module. ADC will stay powered on while the counter is greater than 0. Call adc_power_release when done using the ADC.

void **adc_power_release**(void)

Decrement the usage counter for ADC module. ADC will stay powered on while the counter is greater than 0. Call this function when done using the ADC.

esp_err_t **adc_gpio_init**(*adc_unit_t adc_unit*, *adc_channel_t channel*)

Initialize ADC pad.

Return

- ESP_OK success
- ESP_ERR_INVALID_ARG Parameter error

Parameters

- `adc_unit`: ADC unit index
- `channel`: ADC channel index

esp_err_t **adc1_pad_get_io_num**(*adc1_channel_t channel*, *gpio_num_t *gpio_num*)

Get the GPIO number of a specific ADC1 channel.

Return

- ESP_OK if success
- ESP_ERR_INVALID_ARG if channel not valid

Parameters

- `channel`: Channel to get the GPIO number
- `gpio_num`: output buffer to hold the GPIO number

esp_err_t **adc1_config_channel_atten**(*adc1_channel_t channel*, *adc_atten_t atten*)

Set the attenuation of a particular channel on ADC1, and configure its associated GPIO pin mux.

The default ADC voltage is for attenuation 0 dB and listed in the table below. By setting higher attenuation it is possible to read higher voltages.

Due to ADC characteristics, most accurate results are obtained within the "suggested range" shown in the following table.

SoC	attenuation (dB)	suggested range (mV)
ESP32	0	100 ~ 950
	2.5	100 ~ 1250
	6	150 ~ 1750
	11	150 ~ 2450
ESP32-S2	0	0 ~ 750
	2.5	0 ~ 1050
	6	0 ~ 1300
	11	0 ~ 2500

For maximum accuracy, use the ADC calibration APIs and measure voltages within these recommended ranges.

Note For any given channel, this function must be called before the first time `adc1_get_raw()` is called for that channel.

Note This function can be called multiple times to configure multiple ADC channels simultaneously. You may call `adc1_get_raw()` only after configuring a channel.

Return

- ESP_OK success
- ESP_ERR_INVALID_ARG Parameter error

Parameters

- `channel`: ADC1 channel to configure
- `atten`: Attenuation level

esp_err_t **adc1_config_width**(*adc_bits_width_t width_bit*)

Configure ADC1 capture width, meanwhile enable output invert for ADC1. The configuration is for all channels of ADC1.

Return

- ESP_OK success
- ESP_ERR_INVALID_ARG Parameter error

Parameters

- `width_bit`: Bit capture width for ADC1

int **adc1_get_raw**(*adc1_channel_t channel*)

Take an ADC1 reading from a single channel.

Note ESP32: When the power switch of SARADC1, SARADC2, HALL sensor and AMP sensor is turned on, the input of GPIO36 and GPIO39 will be pulled down for about 80ns. When enabling power for any of these peripherals, ignore input from GPIO36 and GPIO39. Please refer to section 3.11 of 'ECO_and_Workarounds_for_Bugs_in_ESP32' for the description of this issue. As a workaround, call adc_power_acquire() in the app. This will result in higher power consumption (by ~1mA), but will remove the glitches on GPIO36 and GPIO39.

Note Call `adc1_config_width()` before the first time this function is called.

Note For any given channel, adc1_config_channel_atten(channel) must be called before the first time this function is called. Configuring a new channel does not prevent a previously configured channel from being read.

Return

- -1: Parameter error
- Other: ADC1 channel reading.

Parameters

- `channel`: ADC1 channel to read

esp_err_t **adc_set_data_inv**(*adc_unit_t adc_unit*, bool *inv_en*)

Set ADC data invert.

Return

- ESP_OK success
- ESP_ERR_INVALID_ARG Parameter error

Parameters

- `adc_unit`: ADC unit index
- `inv_en`: whether enable data invert

esp_err_t **adc_set_clk_div**(uint8_t *clk_div*)

Set ADC source clock.

Return

- ESP_OK success

Parameters

- `clk_div`: ADC clock divider, ADC clock is divided from APB clock

esp_err_t **adc_set_data_width**(*adc_unit_t adc_unit*, *adc_bits_width_t width_bit*)

Configure ADC capture width.

Return

- ESP_OK success
- ESP_ERR_INVALID_ARG Parameter error

Parameters

- `adc_unit`: ADC unit index
- `width_bit`: Bit capture width for ADC unit.

void **adc1_ulp_enable**(void)

Configure ADC1 to be usable by the ULP.

This function reconfigures ADC1 to be controlled by the ULP. Effect of this function can be reverted using `adc1_get_raw()` function.

Note that adc1_config_channel_atten, `adc1_config_width()` functions need to be called to configure ADC1 channels, before ADC1 is used by the ULP.

esp_err_t **adc2_pad_get_io_num**(*adc2_channel_t channel*, *gpio_num_t *gpio_num*)

Get the GPIO number of a specific ADC2 channel.

Return

- ESP_OK if success
- ESP_ERR_INVALID_ARG if channel not valid

Parameters

- `channel`: Channel to get the GPIO number
- `gpio_num`: output buffer to hold the GPIO number

esp_err_t **adc2_config_channel_atten**(*adc2_channel_t channel*, *adc_atten_t atten*)

Configure the ADC2 channel, including setting attenuation.

The default ADC voltage is for attenuation 0 dB and listed in the table below. By setting higher attenuation it is possible to read higher voltages.

Due to ADC characteristics, most accurate results are obtained within the "suggested range" shown in the following table.

SoC	attenuation (dB)	suggested range (mV)
	0	100 ~ 950
	2.5	100 ~ 1250

(下页继续)

(续上页)

ESP32	6	150 ~ 1750
	11	150 ~ 2450
	0	0 ~ 750
	2.5	0 ~ 1050
ESP32-S2	6	0 ~ 1300
	11	0 ~ 2500

For maximum accuracy, use the ADC calibration APIs and measure voltages within these recommended ranges.

Note This function also configures the input GPIO pin mux to connect it to the ADC2 channel. It must be called before calling `adc2_get_raw()` for this channel.

Note For any given channel, this function must be called before the first time `adc2_get_raw()` is called for that channel.

Return

- ESP_OK success
- ESP_ERR_INVALID_ARG Parameter error

Parameters

- `channel`: ADC2 channel to configure
- `atten`: Attenuation level

esp_err_t **adc2_get_raw** (*adc2_channel_t channel*, *adc_bits_width_t width_bit*, int **raw_out*)

Take an ADC2 reading on a single channel.

Note ESP32: When the power switch of SARADC1, SARADC2, HALL sensor and AMP sensor is turned on, the input of GPIO36 and GPIO39 will be pulled down for about 80ns. When enabling power for any of these peripherals, ignore input from GPIO36 and GPIO39. Please refer to section 3.11 of 'ECO_and_Workarounds_for_Bugs_in_ESP32' for the description of this issue. As a workaround, call adc_power_acquire() in the app. This will result in higher power consumption (by ~1mA), but will remove the glitches on GPIO36 and GPIO39.

Note ESP32: For a given channel, `adc2_config_channel_atten()` must be called before the first time this function is called. If Wi-Fi is started via `esp_wifi_start()`, this function will always fail with `ESP_ERR_TIMEOUT`.

Note ESP32-S2: ADC2 support hardware arbiter. The arbiter is to improve the use efficiency of ADC2. After the control right is robbed by the high priority, the low priority controller will read the invalid ADC2 data. Default priority: Wi-Fi > RTC > Digital;

Return

- ESP_OK if success
- ESP_ERR_TIMEOUT ADC2 is being used by other controller and the request timed out.
- ESP_ERR_INVALID_STATE The controller status is invalid. Please try again.

Parameters

- `channel`: ADC2 channel to read
- `width_bit`: Bit capture width for ADC2
- `raw_out`: the variable to hold the output data.

esp_err_t **adc_vref_to_gpio** (*adc_unit_t adc_unit*, *gpio_num_t gpio*)

Output ADC1 or ADC2's reference voltage to `adc2_channe_t`'s IO.

This function routes the internal reference voltage of ADCn to one of ADC2's channels. This reference voltage can then be manually measured for calibration purposes.

Note ESP32 only supports output of ADC2's internal reference voltage.

Return

- ESP_OK: v_ref successfully routed to selected GPIO

- ESP_ERR_INVALID_ARG: Unsupported GPIO

Parameters

- `[in] adc_unit`: ADC unit index
- `[in] gpio`: GPIO number (Only ADC2's channels IO are supported)

esp_err_t **adc2_vref_to_gpio**(*gpio_num_t gpio*)

Output ADC2 reference voltage to `adc2_channe_t`'s IO.

This function routes the internal reference voltage of ADCn to one of ADC2's channels. This reference voltage can then be manually measured for calibration purposes.

Return

- ESP_OK: v_ref successfully routed to selected GPIO
- ESP_ERR_INVALID_ARG: Unsupported GPIO

Parameters

- `[in] gpio`: GPIO number (ADC2's channels are supported)

esp_err_t **adc_digi_init**(void)

ADC digital controller initialization.

Return

- ESP_OK Success

esp_err_t **adc_digi_deinit**(void)

ADC digital controller deinitialization.

Return

- ESP_OK Success

esp_err_t **adc_digi_controller_config**(**const** *adc_digi_config_t* **config*)

Setting the digital controller.

Return

- ESP_ERR_INVALID_STATE Driver state is invalid.
- ESP_ERR_INVALID_ARG If the combination of arguments is invalid.
- ESP_OK On success

Parameters

- `config`: Pointer to digital controller paramter. Refer to *`adc_digi_config_t`*.

Macros

ADC_ATTEN_0db

ADC rtc controller attenuation option.

Note This definitions are only for being back-compatible

ADC_ATTEN_2_5db

ADC_ATTEN_6db

ADC_ATTEN_11db

ADC_WIDTH_BIT_DEFAULT

The default (max) bit width of the ADC of current version. You can also get the maximum bitwidth by `SOC_ADC_MAX_BITWIDTH` defined in soc_caps.h.

ADC_WIDTH_9Bit

ADC_WIDTH_10Bit

ADC_WIDTH_11Bit

ADC_WIDTH_12Bit

Enumerations

enum adc1_channel_t

Values:

ADC1_CHANNEL_0 = 0
ADC1 channel 0 is GPIO36

ADC1_CHANNEL_1
ADC1 channel 1 is GPIO37

ADC1_CHANNEL_2
ADC1 channel 2 is GPIO38

ADC1_CHANNEL_3
ADC1 channel 3 is GPIO39

ADC1_CHANNEL_4
ADC1 channel 4 is GPIO32

ADC1_CHANNEL_5
ADC1 channel 5 is GPIO33

ADC1_CHANNEL_6
ADC1 channel 6 is GPIO34

ADC1_CHANNEL_7
ADC1 channel 7 is GPIO35

ADC1_CHANNEL_MAX

enum adc2_channel_t

Values:

ADC2_CHANNEL_0 = 0
ADC2 channel 0 is GPIO4 (ESP32), GPIO11 (ESP32-S2)

ADC2_CHANNEL_1
ADC2 channel 1 is GPIO0 (ESP32), GPIO12 (ESP32-S2)

ADC2_CHANNEL_2
ADC2 channel 2 is GPIO2 (ESP32), GPIO13 (ESP32-S2)

ADC2_CHANNEL_3
ADC2 channel 3 is GPIO15 (ESP32), GPIO14 (ESP32-S2)

ADC2_CHANNEL_4
ADC2 channel 4 is GPIO13 (ESP32), GPIO15 (ESP32-S2)

ADC2_CHANNEL_5
ADC2 channel 5 is GPIO12 (ESP32), GPIO16 (ESP32-S2)

ADC2_CHANNEL_6
ADC2 channel 6 is GPIO14 (ESP32), GPIO17 (ESP32-S2)

ADC2_CHANNEL_7
ADC2 channel 7 is GPIO27 (ESP32), GPIO18 (ESP32-S2)

ADC2_CHANNEL_8
ADC2 channel 8 is GPIO25 (ESP32), GPIO19 (ESP32-S2)

ADC2_CHANNEL_9
ADC2 channel 9 is GPIO26 (ESP32), GPIO20 (ESP32-S2)

ADC2_CHANNEL_MAX

enum adc_i2s_encode_t

ADC digital controller encode option.

Values:

ADC_ENCODE_12BIT
ADC to DMA data format, , [15:12]-channel [11:0]-12 bits ADC data

ADC_ENCODE_11BIT
ADC to DMA data format, [15]-unit, [14:11]-channel [10:0]-11 bits ADC data

ADC_ENCODE_MAX

ADC Calibration

Header File

- esp_adc_cal/include/esp_adc_cal.h

Functions

esp_err_t **esp_adc_cal_check_efuse**(*esp_adc_cal_value_t value_type*)

Checks if ADC calibration values are burned into eFuse.

This function checks if ADC reference voltage or Two Point values have been burned to the eFuse of the current ESP32

Note in ESP32S2, only ESP_ADC_CAL_VAL_EFUSE_TP is supported. Some old ESP32S2s do not support this, either. In which case you have to calibrate it manually, possibly by performing your own two-point calibration on the chip.

Return

- ESP_OK: The calibration mode is supported in eFuse
- ESP_ERR_NOT_SUPPORTED: Error, eFuse values are not burned
- ESP_ERR_INVALID_ARG: Error, invalid argument (ESP_ADC_CAL_VAL_DEFAULT_VREF)

Parameters

- `value_type`: Type of calibration value (ESP_ADC_CAL_VAL_EFUSE_VREF or ESP_ADC_CAL_VAL_EFUSE_TP)

esp_adc_cal_value_t **esp_adc_cal_characterize**(*adc_unit_t adc_num*, *adc_atten_t atten*, *adc_bits_width_t bit_width*, uint32_t *default_vref*, *esp_adc_cal_characteristics_t* *chars)

Characterize an ADC at a particular attenuation.

This function will characterize the ADC at a particular attenuation and generate the ADC-Voltage curve in the form of [y = coeff_a * x + coeff_b]. Characterization can be based on Two Point values, eFuse Vref, or default Vref and the calibration values will be prioritized in that order.

Note For ESP32, Two Point values and eFuse Vref calibration can be enabled/disabled using menuconfig. For ESP32s2, only Two Point values calibration and only ADC_WIDTH_BIT_13 is supported. The parameter default_vref is unused.

Return

- ESP_ADC_CAL_VAL_EFUSE_VREF: eFuse Vref used for characterization
- ESP_ADC_CAL_VAL_EFUSE_TP: Two Point value used for characterization (only in Linear Mode)
- ESP_ADC_CAL_VAL_DEFAULT_VREF: Default Vref used for characterization

Parameters

- `[in] adc_num`: ADC to characterize (ADC_UNIT_1 or ADC_UNIT_2)
- `[in] atten`: Attenuation to characterize
- `[in] bit_width`: Bit width configuration of ADC
- `[in] default_vref`: Default ADC reference voltage in mV (Only in ESP32, used if eFuse values is not available)
- `[out] chars`: Pointer to empty structure used to store ADC characteristics

uint32_t **esp_adc_cal_raw_to_voltage**(uint32_t *adc_reading*, **const** *esp_adc_cal_characteristics_t* *chars)

Convert an ADC reading to voltage in mV.

This function converts an ADC reading to a voltage in mV based on the ADC's characteristics.

Note Characteristics structure must be initialized before this function is called (call esp_adc_cal_characterize())

Return Voltage in mV

Parameters

- `[in] adc_reading`: ADC reading
- `[in] chars`: Pointer to initialized structure containing ADC characteristics

esp_err_t **esp_adc_cal_get_voltage**(*adc_channel_t channel*, **const** *esp_adc_cal_characteristics_t* **chars*, uint32_t **voltage*)

Reads an ADC and converts the reading to a voltage in mV.

This function reads an ADC then converts the raw reading to a voltage in mV based on the characteristics provided. The ADC that is read is also determined by the characteristics.

Note The Characteristics structure must be initialized before this function is called (call esp_adc_cal_characterize())

Return

- ESP_OK: ADC read and converted to mV
- ESP_ERR_TIMEOUT: Error, timed out attempting to read ADC
- ESP_ERR_INVALID_ARG: Error due to invalid arguments

Parameters

- `[in] channel`: ADC Channel to read
- `[in] chars`: Pointer to initialized ADC characteristics structure
- `[out] voltage`: Pointer to store converted voltage

Structures

struct esp_adc_cal_characteristics_t

Structure storing characteristics of an ADC.

Note Call esp_adc_cal_characterize() to initialize the structure

Public Members

adc_unit_t **adc_num**

ADC number

adc_atten_t **atten**

ADC attenuation

adc_bits_width_t **bit_width**

ADC bit width

uint32_t **coeff_a**

Gradient of ADC-Voltage curve

uint32_t **coeff_b**

Offset of ADC-Voltage curve

uint32_t **vref**

Vref used by lookup table

const uint32_t ***low_curve**

Pointer to low Vref curve of lookup table (NULL if unused)

const uint32_t ***high_curve**

Pointer to high Vref curve of lookup table (NULL if unused)

Enumerations

enum esp_adc_cal_value_t

Type of calibration value used in characterization.

Values:

ESP_ADC_CAL_VAL_EFUSE_VREF = 0

Characterization based on reference voltage stored in eFuse

ESP_ADC_CAL_VAL_EFUSE_TP = 1
Characterization based on Two Point values stored in eFuse

ESP_ADC_CAL_VAL_DEFAULT_VREF = 2
Characterization based on default reference voltage

ESP_ADC_CAL_VAL_MAX

ESP_ADC_CAL_VAL_NOT_SUPPORTED = *ESP_ADC_CAL_VAL_MAX*

GPIO Lookup Macros

Header File

- soc/esp32/include/soc/adc_channel.h

Macros

ADC1_GPIO36_CHANNEL
ADC1_CHANNEL_0_GPIO_NUM

ADC1_GPIO37_CHANNEL

ADC1_CHANNEL_1_GPIO_NUM

ADC1_GPIO38_CHANNEL

ADC1_CHANNEL_2_GPIO_NUM

ADC1_GPIO39_CHANNEL

ADC1_CHANNEL_3_GPIO_NUM

ADC1_GPIO32_CHANNEL

ADC1_CHANNEL_4_GPIO_NUM

ADC1_GPIO33_CHANNEL

ADC1_CHANNEL_5_GPIO_NUM

ADC1_GPIO34_CHANNEL

ADC1_CHANNEL_6_GPIO_NUM

ADC1_GPIO35_CHANNEL

ADC1_CHANNEL_7_GPIO_NUM

ADC2_GPIO4_CHANNEL

ADC2_CHANNEL_0_GPIO_NUM

ADC2_GPIO0_CHANNEL

ADC2_CHANNEL_1_GPIO_NUM

ADC2_GPIO2_CHANNEL

ADC2_CHANNEL_2_GPIO_NUM

ADC2_GPIO15_CHANNEL

ADC2_CHANNEL_3_GPIO_NUM

ADC2_GPIO13_CHANNEL

ADC2_CHANNEL_4_GPIO_NUM

ADC2_GPIO12_CHANNEL

ADC2_CHANNEL_5_GPIO_NUM

ADC2_GPIO14_CHANNEL

ADC2_CHANNEL_6_GPIO_NUM

ADC2_GPIO27_CHANNEL

ADC2_CHANNEL_7_GPIO_NUM

ADC2_GPIO25_CHANNEL

ADC2_CHANNEL_8_GPIO_NUM

ADC2_GPIO26_CHANNEL

ADC2_CHANNEL_9_GPIO_NUM

2.3.2 Digital To Analog Converter

Overview

ESP32 has two 8-bit DAC (digital to analog converter) channels, connected to GPIO25 (Channel 1) and GPIO26 (Channel 2).

The DAC driver allows these channels to be set to arbitrary voltages.

The DAC channels can also be driven with DMA-style written sample data by the digital controller, via the *I2S driver* when using the "built-in DAC mode".

For other analog output options, see the *Sigma-delta Modulation module* and the *LED Control module*. Both these modules produce high frequency PWM output, which can be hardware low-pass filtered in order to generate a lower frequency analog output.

Application Example

Setting DAC channel 1 (GPIO25) voltage to approx 0.78 of VDD_A voltage (VDD * 200 / 255). For VDD_A 3.3V, this is 2.59V:

```
#include <driver/dac.h>

...

    dac_output_enable(DAC_CHANNEL_1);
    dac_output_voltage(DAC_CHANNEL_1, 200);
```

API Reference

Header File

- driver/esp32/include/driver/dac.h

Functions

esp_err_t **dac_i2s_enable**(void)

Enable DAC output data from I2S.

Return

- ESP_OK success

esp_err_t **dac_i2s_disable**(void)

Disable DAC output data from I2S.

Return

- ESP_OK success

Header File

- driver/include/driver/dac_common.h

Functions

esp_err_t **dac_pad_get_io_num**(*dac_channel_t channel*, *gpio_num_t *gpio_num*)

Get the GPIO number of a specific DAC channel.

Return
- ESP_OK if success

Parameters
- `channel`: Channel to get the gpio number
- `gpio_num`: output buffer to hold the gpio number

esp_err_t **dac_output_voltage**(*dac_channel_t channel*, uint8_t *dac_value*)

Set DAC output voltage. DAC output is 8-bit. Maximum (255) corresponds to VDD3P3_RTC.

Note Need to configure DAC pad before calling this function. DAC channel 1 is attached to GPIO25, DAC channel 2 is attached to GPIO26

Return
- ESP_OK success

Parameters
- `channel`: DAC channel
- `dac_value`: DAC output value

esp_err_t **dac_output_enable**(*dac_channel_t channel*)

DAC pad output enable.

Note DAC channel 1 is attached to GPIO25, DAC channel 2 is attached to GPIO26 I2S left channel will be mapped to DAC channel 2 I2S right channel will be mapped to DAC channel 1

Parameters
- `channel`: DAC channel

esp_err_t **dac_output_disable**(*dac_channel_t channel*)

DAC pad output disable.

Note DAC channel 1 is attached to GPIO25, DAC channel 2 is attached to GPIO26

Return
- ESP_OK success

Parameters
- `channel`: DAC channel

esp_err_t **dac_cw_generator_enable**(void)

Enable cosine wave generator output.

Return
- ESP_OK success

esp_err_t **dac_cw_generator_disable**(void)

Disable cosine wave generator output.

Return
- ESP_OK success

esp_err_t **dac_cw_generator_config**(*dac_cw_config_t *cw*)

Config the cosine wave generator function in DAC module.

Return
- ESP_OK success
- ESP_ERR_INVALID_ARG The parameter is NULL.

Parameters
- `cw`: Configuration.

GPIO Lookup Macros Some useful macros can be used to specified the GPIO number of a DAC channel, or vice versa. e.g.

1. `DAC_CHANNEL_1_GPIO_NUM` is the GPIO number of channel 1 (GPIO25);
2. `DAC_GPIO26_CHANNEL` is the channel number of GPIO 26 (channel 2).

Header File

- soc/esp32/include/soc/dac_channel.h

Macros

DAC_GPIO25_CHANNEL

DAC_CHANNEL_1_GPIO_NUM

DAC_GPIO26_CHANNEL

DAC_CHANNEL_2_GPIO_NUM

Header File

- hal/include/hal/dac_types.h

Structures

struct dac_cw_config_t

Config the cosine wave generator function in DAC module.

Public Members

dac_channel_t **en_ch**

Enable the cosine wave generator of DAC channel.

dac_cw_scale_t **scale**

Set the amplitude of the cosine wave generator output.

dac_cw_phase_t **phase**

Set the phase of the cosine wave generator output.

uint32_t **freq**

Set frequency of cosine wave generator output. Range: 130(130Hz) ~ 55000(100KHz).

int8_t **offset**

Set the voltage value of the DC component of the cosine wave generator output. Note: Unreasonable settings can cause waveform to be oversaturated. Range: -128 ~ 127.

Enumerations

enum dac_channel_t

Values:

DAC_CHANNEL_1 = 0

DAC channel 1 is GPIO25(ESP32) / GPIO17(ESP32S2)

DAC_CHANNEL_2 = 1

DAC channel 2 is GPIO26(ESP32) / GPIO18(ESP32S2)

DAC_CHANNEL_MAX

enum dac_cw_scale_t

The multiple of the amplitude of the cosine wave generator. The max amplitude is VDD3P3_RTC.

Values:

DAC_CW_SCALE_1 = 0x0
1/1. Default.

DAC_CW_SCALE_2 = 0x1
1/2.

DAC_CW_SCALE_4 = 0x2
1/4.

DAC_CW_SCALE_8 = 0x3
1/8.

enum dac_cw_phase_t
Set the phase of the cosine wave generator output.

Values:

DAC_CW_PHASE_0 = 0x2
Phase shift +0°

DAC_CW_PHASE_180 = 0x3
Phase shift +180°

2.3.3 通用定时器

简介

ESP32 芯片提供两组硬件定时器，每组包含两个通用硬件定时器。所有定时器均为 64 位通用定时器，包括 16 位预分频器和 64 位自动重载向上/向下计数器。

功能概述

下文介绍了配置和操作定时器的常规步骤：

- 定时器初始化 - 启动定时器前应设置的参数，以及每个设置提供的具体功能。
- 定时器控制 - 如何读取定时器的值，如何暂停/启动定时器以及如何改变定时器的操作方式。
- 警报 - 如何设置和使用警报。
- 处理中断事务- 如何使用中断提供的回调函数。

定时器初始化 两个 ESP32 定时器组中，每组都有两个定时器，两组共有四个定时器供使用。ESP32 定时器组的类型为*timer_group_t*，每组中的个体定时器类型为*timer_idx_t*。

首先调用*timer_init()* 函数，并将*timer_config_t* 结构体传递给此函数，用于定义定时器的工作方式，实现定时器初始化。特别注意以下定时器参数可设置为：

- **时钟源**: 选择时钟源，它同时钟分频器一起决定了定时器的分辨率。默认的时钟源是 APB_CLK (一般是 80 MHz)。
- **分频器**: 设置定时器中计数器计数的速度，`divider` 的设置将用作输入时钟源的除数。
- **模式**: 设置计数器是递增还是递减。可通过从*timer_count_dir_t* 中选取一个值，后使用 `counter_dir` 来选择模式。
- **计数器使能**: 如果计数器已使能，则在调用*timer_init()* 后计数器将立即开始递增/递减。您可通过从*timer_start_t* 中选取一个值，后使用 `counter_en` 改变此行为。
- **报警使能**: 可使用 `alarm_en` 设置。
- **自动重载**: 设置计数器是否应该在定时器警报上使用 `auto_reload` 自动重载首个计数值，还是继续递增或递减。

要获取定时器设置的当前值，请使用函数*timer_get_config()*。

定时器控制 定时器使能后便开始计数。要使能定时器，可首先设置 counter_en 为 true，然后调用函数*timer_init()*，或者直接调用函数*timer_start()*。您可通过调用函数*timer_set_counter_value()* 来指定定时器的首个计数值。要检查定时器的当前值，调用函数*timer_get_counter_value()* 或*timer_get_counter_time_sec()*。

可通过调用函数*timer_pause()* 随时暂停定时器。要再次启动它，调用函数*timer_start()*。

要重新配置定时器，可调用函数*timer_init()*，该函数详细介绍见定时器初始化。

除此之外，还可通过使用专有函数更改个别设置来重新配置定时器：

设置	专有函数	描述
分频器	*timer_set_divider()*	更改计数频率。为避免发生不可预测情况，更改分频器时应暂停定时器。如果定时器正在运行，则使用*timer_set_divider()* 将其暂停并更改设置，然后重启定时器。
模式	*timer_set_counter_mode()*	设置计数器应递增还是递减
自动重载	*timer_set_auto_reload()*	设置是否应在定时器警报上重载首个计数值

警报 要设置警报，先调用函数*timer_set_alarm_value()*，然后使用*timer_set_alarm()* 使能警报。当调用函数*timer_init()* 时，也可以在定时器初始化阶段使能警报。

警报已使能且定时器达到警报值后，根据配置，可能会出现以下两种行为：

- 如果先前已配置，此时将触发中断。有关如何配置中断，请参见处理中断事务。
- 如 auto_reload 已使能，定时器的计数器将重新加载，从先前配置好的值开始再次计数。应使用函数*timer_set_counter_value()* 预先设置该值。

注解:

- 如果已设置警报值且定时器已超过该值，则将立即触发警报。
- 一旦触发后，警报将自动关闭，需要重新使能以再次触发。

要检查某特定的警报值，调用函数*timer_get_alarm_value()*。

处理中断事务 调用*timer_isr_callback_add()* 函数可以给某个定时器注册一个中断回调函数，顾名思义，该函数会在中断上下文中被执行，因此用户不能在回调函数中调用任何会阻塞 CPU 的 API。相较于从头编写中断处理程序，使用中断回调函数的好处是，用户无需检测和处理中断的状态位，这些操作会由驱动中默认的中断处理程序替我们完成。

有关如何使用中断回调函数，请参考如下应用示例。

应用示例

64 位通用硬件定时器示例：peripherals/timer_group。

API 参考

Header File

- driver/include/driver/timer.h

Functions

esp_err_t **timer_get_counter_value**(*timer_group_t group_num*, *timer_idx_t timer_num*, uint64_t **timer_val*)

Read the counter value of hardware timer.

Return

- ESP_OK Success
- ESP_ERR_INVALID_ARG Parameter error

Parameters

- `group_num`: Timer group, 0 for TIMERG0 or 1 for TIMERG1
- `timer_num`: Timer index, 0 for hw_timer[0] & 1 for hw_timer[1]
- `timer_val`: Pointer to accept timer counter value.

esp_err_t **timer_get_counter_time_sec**(*timer_group_t group_num*, *timer_idx_t timer_num*, double **time*)

Read the counter value of hardware timer, in unit of a given scale.

Return

- ESP_OK Success
- ESP_ERR_INVALID_ARG Parameter error

Parameters

- `group_num`: Timer group, 0 for TIMERG0 or 1 for TIMERG1
- `timer_num`: Timer index, 0 for hw_timer[0] & 1 for hw_timer[1]
- `time`: Pointer, type of double*, to accept timer counter value, in seconds.

esp_err_t **timer_set_counter_value**(*timer_group_t group_num*, *timer_idx_t timer_num*, uint64_t *load_val*)

Set counter value to hardware timer.

Return

- ESP_OK Success
- ESP_ERR_INVALID_ARG Parameter error

Parameters

- `group_num`: Timer group, 0 for TIMERG0 or 1 for TIMERG1
- `timer_num`: Timer index, 0 for hw_timer[0] & 1 for hw_timer[1]
- `load_val`: Counter value to write to the hardware timer.

esp_err_t **timer_start**(*timer_group_t group_num*, *timer_idx_t timer_num*)

Start the counter of hardware timer.

Return

- ESP_OK Success
- ESP_ERR_INVALID_ARG Parameter error

Parameters

- `group_num`: Timer group number, 0 for TIMERG0 or 1 for TIMERG1
- `timer_num`: Timer index, 0 for hw_timer[0] & 1 for hw_timer[1]

esp_err_t **timer_pause**(*timer_group_t group_num*, *timer_idx_t timer_num*)

Pause the counter of hardware timer.

Return

- ESP_OK Success
- ESP_ERR_INVALID_ARG Parameter error

Parameters

- `group_num`: Timer group number, 0 for TIMERG0 or 1 for TIMERG1
- `timer_num`: Timer index, 0 for hw_timer[0] & 1 for hw_timer[1]

esp_err_t **timer_set_counter_mode**(*timer_group_t group_num*, *timer_idx_t timer_num*, *timer_count_dir_t counter_dir*)

Set counting mode for hardware timer.

Return

- ESP_OK Success
- ESP_ERR_INVALID_ARG Parameter error

Parameters

- group_num: Timer group number, 0 for TIMERG0 or 1 for TIMERG1
- timer_num: Timer index, 0 for hw_timer[0] & 1 for hw_timer[1]
- counter_dir: Counting direction of timer, count-up or count-down

esp_err_t **timer_set_auto_reload**(*timer_group_t group_num*, *timer_idx_t timer_num*, *timer_autoreload_t reload*)

Enable or disable counter reload function when alarm event occurs.

Return

- ESP_OK Success
- ESP_ERR_INVALID_ARG Parameter error

Parameters

- group_num: Timer group number, 0 for TIMERG0 or 1 for TIMERG1
- timer_num: Timer index, 0 for hw_timer[0] & 1 for hw_timer[1]
- reload: Counter reload mode.

esp_err_t **timer_set_divider**(*timer_group_t group_num*, *timer_idx_t timer_num*, uint32_t *divider*)

Set hardware timer source clock divider. Timer groups clock are divider from APB clock.

Return

- ESP_OK Success
- ESP_ERR_INVALID_ARG Parameter error

Parameters

- group_num: Timer group number, 0 for TIMERG0 or 1 for TIMERG1
- timer_num: Timer index, 0 for hw_timer[0] & 1 for hw_timer[1]
- divider: Timer clock divider value. The divider's range is from from 2 to 65536.

esp_err_t **timer_set_alarm_value**(*timer_group_t group_num*, *timer_idx_t timer_num*, uint64_t *alarm_value*)

Set timer alarm value.

Return

- ESP_OK Success
- ESP_ERR_INVALID_ARG Parameter error

Parameters

- group_num: Timer group, 0 for TIMERG0 or 1 for TIMERG1
- timer_num: Timer index, 0 for hw_timer[0] & 1 for hw_timer[1]
- alarm_value: A 64-bit value to set the alarm value.

esp_err_t **timer_get_alarm_value**(*timer_group_t group_num*, *timer_idx_t timer_num*, uint64_t **alarm_value*)

Get timer alarm value.

Return

- ESP_OK Success
- ESP_ERR_INVALID_ARG Parameter error

Parameters

- group_num: Timer group, 0 for TIMERG0 or 1 for TIMERG1
- timer_num: Timer index, 0 for hw_timer[0] & 1 for hw_timer[1]
- alarm_value: Pointer of A 64-bit value to accept the alarm value.

esp_err_t **timer_set_alarm**(*timer_group_t group_num*, *timer_idx_t timer_num*, *timer_alarm_t alarm_en*)

Enable or disable generation of timer alarm events.

Return

- ESP_OK Success
- ESP_ERR_INVALID_ARG Parameter error

Parameters

- group_num: Timer group, 0 for TIMERG0 or 1 for TIMERG1
- timer_num: Timer index, 0 for hw_timer[0] & 1 for hw_timer[1]
- alarm_en: To enable or disable timer alarm function.

esp_err_t **timer_isr_callback_add**(*timer_group_t group_num*, *timer_idx_t timer_num*, *timer_isr_t isr_handler*, void **arg*, int *intr_alloc_flags*)

Add ISR handle callback for the corresponding timer.

The callback should return a bool value to determine whether need to do YIELD at the end of the ISR.

Note This ISR handler will be called from an ISR. This ISR handler do not need to handle interrupt status, and should be kept short. If you want to realize some specific applications or write the whole ISR, you can call timer_isr_register(⋯) to register ISR.

Parameters

- `group_num`: Timer group number
- `timer_num`: Timer index of timer group
- `isr_handler`: Interrupt handler function, it is a callback function.
- `arg`: Parameter for handler function
- `intr_alloc_flags`: Flags used to allocate the interrupt. One or multiple (ORred) ESP_INTR_FLAG_* values. See esp_intr_alloc.h for more info.

If the intr_alloc_flags value ESP_INTR_FLAG_IRAM is set, the handler function must be declared with IRAM_ATTR attribute and can only call functions in IRAM or ROM. It cannot call other timer APIs.

Return

- ESP_OK Success
- ESP_ERR_INVALID_ARG Parameter error

esp_err_t **timer_isr_callback_remove**(*timer_group_t group_num*, *timer_idx_t timer_num*)

Remove ISR handle callback for the corresponding timer.

Return

- ESP_OK Success
- ESP_ERR_INVALID_ARG Parameter error

Parameters

- `group_num`: Timer group number
- `timer_num`: Timer index of timer group

esp_err_t **timer_isr_register**(*timer_group_t group_num*, *timer_idx_t timer_num*, void (***fn*)) void ** , void **arg*, int *intr_alloc_flags*, *timer_isr_handle_t *handle*Register Timer interrupt handler, the handler is an ISR. The handler will be attached to the same CPU core that this function is running on.

If the intr_alloc_flags value ESP_INTR_FLAG_IRAM is set, the handler function must be declared with IRAM_ATTR attribute and can only call functions in IRAM or ROM. It cannot call other timer APIs. Use direct register access to configure timers from inside the ISR in this case.

Note If use this function to reigster ISR, you need to write the whole ISR. In the interrupt handler, you need to call timer_spinlock_take(..) before your handling, and call timer_spinlock_give(⋯) after your handling.

Parameters

- `group_num`: Timer group number
- `timer_num`: Timer index of timer group
- `fn`: Interrupt handler function.
- `arg`: Parameter for handler function
- `intr_alloc_flags`: Flags used to allocate the interrupt. One or multiple (ORred) ESP_INTR_FLAG_* values. See esp_intr_alloc.h for more info.
- `handle`: Pointer to return handle. If non-NULL, a handle for the interrupt will be returned here.

Return

- ESP_OK Success
- ESP_ERR_INVALID_ARG Parameter error

esp_err_t **timer_init**(*timer_group_t group_num*, *timer_idx_t timer_num*, **const** *timer_config_t *config*)

Initializes and configure the timer.

Return

- ESP_OK Success
- ESP_ERR_INVALID_ARG Parameter error

Parameters

- group_num: Timer group number, 0 for TIMERG0 or 1 for TIMERG1
- timer_num: Timer index, 0 for hw_timer[0] & 1 for hw_timer[1]
- config: Pointer to timer initialization parameters.

esp_err_t **timer_deinit**(*timer_group_t group_num*, *timer_idx_t timer_num*)

Deinitializes the timer.

Return

- ESP_OK Success
- ESP_ERR_INVALID_ARG Parameter error

Parameters

- group_num: Timer group number, 0 for TIMERG0 or 1 for TIMERG1
- timer_num: Timer index, 0 for hw_timer[0] & 1 for hw_timer[1]

esp_err_t **timer_get_config**(*timer_group_t group_num*, *timer_idx_t timer_num*, *timer_config_t *config*)

Get timer configure value.

Return

- ESP_OK Success
- ESP_ERR_INVALID_ARG Parameter error

Parameters

- group_num: Timer group number, 0 for TIMERG0 or 1 for TIMERG1
- timer_num: Timer index, 0 for hw_timer[0] & 1 for hw_timer[1]
- config: Pointer of struct to accept timer parameters.

esp_err_t **timer_group_intr_enable**(*timer_group_t group_num*, *timer_intr_t intr_mask*)

Enable timer group interrupt, by enable mask.

Return

- ESP_OK Success
- ESP_ERR_INVALID_ARG Parameter error

Parameters

- group_num: Timer group number, 0 for TIMERG0 or 1 for TIMERG1
- intr_mask: Timer interrupt enable mask.
  - TIMER_INTR_T0: t0 interrupt
  - TIMER_INTR_T1: t1 interrupt
  - TIMER_INTR_WDT: watchdog interrupt

esp_err_t **timer_group_intr_disable**(*timer_group_t group_num*, *timer_intr_t intr_mask*)

Disable timer group interrupt, by disable mask.

Return

- ESP_OK Success
- ESP_ERR_INVALID_ARG Parameter error

Parameters

- group_num: Timer group number, 0 for TIMERG0 or 1 for TIMERG1
- intr_mask: Timer interrupt disable mask.
  - TIMER_INTR_T0: t0 interrupt
  - TIMER_INTR_T1: t1 interrupt
  - TIMER_INTR_WDT: watchdog interrupt

esp_err_t **timer_enable_intr**(*timer_group_t group_num*, *timer_idx_t timer_num*)

Enable timer interrupt.

Return

- ESP_OK Success
- ESP_ERR_INVALID_ARG Parameter error

Parameters

- group_num: Timer group number, 0 for TIMERG0 or 1 for TIMERG1
- timer_num: Timer index.

esp_err_t **timer_disable_intr**(*timer_group_t group_num*, *timer_idx_t timer_num*)

Disable timer interrupt.

Return

- ESP_OK Success
- ESP_ERR_INVALID_ARG Parameter error

Parameters

- `group_num`: Timer group number, 0 for TIMERG0 or 1 for TIMERG1
- `timer_num`: Timer index.

void **timer_group_intr_clr_in_isr**(*timer_group_t group_num*, *timer_idx_t timer_num*)

Clear timer interrupt status, just used in ISR.

Parameters

- `group_num`: Timer group number, 0 for TIMERG0 or 1 for TIMERG1
- `timer_num`: Timer index.

void **timer_group_clr_intr_status_in_isr**(*timer_group_t group_num*, *timer_idx_t timer_num*)

Clear timer interrupt status, just used in ISR.

Parameters

- `group_num`: Timer group number, 0 for TIMERG0 or 1 for TIMERG1
- `timer_num`: Timer index.

void **timer_group_enable_alarm_in_isr**(*timer_group_t group_num*, *timer_idx_t timer_num*)

Enable alarm interrupt, just used in ISR.

Parameters

- `group_num`: Timer group number, 0 for TIMERG0 or 1 for TIMERG1
- `timer_num`: Timer index.

uint64_t **timer_group_get_counter_value_in_isr**(*timer_group_t group_num*, *timer_idx_t timer_num*)

Get the current counter value, just used in ISR.

Return

- Counter value

Parameters

- `group_num`: Timer group number, 0 for TIMERG0 or 1 for TIMERG1
- `timer_num`: Timer index.

void **timer_group_set_alarm_value_in_isr**(*timer_group_t group_num*, *timer_idx_t timer_num*, uint64_t *alarm_val*)

Set the alarm threshold for the timer, just used in ISR.

Parameters

- `group_num`: Timer group number, 0 for TIMERG0 or 1 for TIMERG1
- `timer_num`: Timer index.
- `alarm_val`: Alarm threshold.

void **timer_group_set_counter_enable_in_isr**(*timer_group_t group_num*, *timer_idx_t timer_num*, *timer_start_t counter_en*)

Enable/disable a counter, just used in ISR.

Parameters

- `group_num`: Timer group number, 0 for TIMERG0 or 1 for TIMERG1
- `timer_num`: Timer index.
- `counter_en`: Enable/disable.

timer_intr_t **timer_group_intr_get_in_isr**(*timer_group_t group_num*)

Get the masked interrupt status, just used in ISR.

Return

- Interrupt status

Parameters

- `group_num`: Timer group number, 0 for TIMERG0 or 1 for TIMERG1

uint32_t **timer_group_get_intr_status_in_isr**(*timer_group_t group_num*)

Get interrupt status, just used in ISR.

Return

- Interrupt status

Parameters

- `group_num`: Timer group number, 0 for TIMERG0 or 1 for TIMERG1

void **`timer_group_clr_intr_sta_in_isr`**(*timer_group_t group_num*, *timer_intr_t intr_mask*)

Clear the masked interrupt status, just used in ISR.

Parameters

- `group_num`: Timer group number, 0 for TIMERG0 or 1 for TIMERG1
- `intr_mask`: Masked interrupt.

bool **`timer_group_get_auto_reload_in_isr`**(*timer_group_t group_num*, *timer_idx_t timer_num*)

Get auto reload enable status, just used in ISR.

Return

- True Auto reload enabled
- False Auto reload disabled

Parameters

- `group_num`: Timer group number, 0 for TIMERG0 or 1 for TIMERG1
- `timer_num`: Timer index

esp_err_t **`timer_spinlock_take`**(*timer_group_t group_num*)

Take timer spinlock to enter critical protect.

Return

- ESP_OK Success
- ESP_ERR_INVALID_ARG Parameter error

Parameters

- `group_num`: Timer group number, 0 for TIMERG0 or 1 for TIMERG1

esp_err_t **`timer_spinlock_give`**(*timer_group_t group_num*)

Give timer spinlock to exit critical protect.

Return

- ESP_OK Success
- ESP_ERR_INVALID_ARG Parameter error

Parameters

- `group_num`: Timer group number, 0 for TIMERG0 or 1 for TIMERG1

Macros

`TIMER_BASE_CLK`

Frequency of the clock on the input of the timer groups

Type Definitions

`typedef` bool (***`timer_isr_t`**) (void *)

Interrupt handle callback function. User need to retrun a bool value in callback.

Return

- True Do task yield at the end of ISR
- False Not do task yield at the end of ISR

Note If you called FreeRTOS functions in callback, you need to return true or false based on the retrun value of argument `pxHigherPriorityTaskWoken`. For example, `xQueueSendFromISR` is called in callback, if the return value `pxHigherPriorityTaskWoken` of any FreeRTOS calls is pdTRUE, return true; otherwise return false.

`typedef` *intr_handle_t* **`timer_isr_handle_t`**

Interrupt handle, used in order to free the isr after use. Aliases to an int handle for now.

Header File

- hal/include/hal/timer_types.h

Structures

struct timer_config_t

Data structure with timer’s configuration settings.

Public Members

timer_alarm_t **alarm_en**

Timer alarm enable

timer_start_t **counter_en**

Counter enable

timer_intr_mode_t **intr_type**

Interrupt mode

timer_count_dir_t **counter_dir**

Counter direction

timer_autoreload_t **auto_reload**

Timer auto-reload

uint32_t **divider**

Counter clock divider. The divider’s range is from from 2 to 65536.

Enumerations

enum timer_group_t

Selects a Timer-Group out of 2 available groups.

Values:

TIMER_GROUP_0 = 0

Hw timer group 0

TIMER_GROUP_1 = 1

Hw timer group 1

TIMER_GROUP_MAX

enum timer_idx_t

Select a hardware timer from timer groups.

Values:

TIMER_0 = 0

Select timer0 of GROUPx

TIMER_1 = 1

Select timer1 of GROUPx

TIMER_MAX

enum timer_count_dir_t

Decides the direction of counter.

Values:

TIMER_COUNT_DOWN = 0

Descending Count from cnt.high|cnt.low

TIMER_COUNT_UP = 1

Ascending Count from Zero

TIMER_COUNT_MAX

enum timer_start_t
Decides whether timer is on or paused.

Values:

TIMER_PAUSE = 0
Pause timer counter

TIMER_START = 1
Start timer counter

enum timer_intr_t
Interrupt types of the timer.

Values:

TIMER_INTR_T0 = BIT(0)
interrupt of timer 0

TIMER_INTR_T1 = BIT(1)
interrupt of timer 1

TIMER_INTR_WDT = BIT(2)
interrupt of watchdog

TIMER_INTR_NONE = 0

enum timer_alarm_t
Decides whether to enable alarm mode.

Values:

TIMER_ALARM_DIS = 0
Disable timer alarm

TIMER_ALARM_EN = 1
Enable timer alarm

TIMER_ALARM_MAX

enum timer_intr_mode_t
Select interrupt type if running in alarm mode.

Values:

TIMER_INTR_LEVEL = 0
Interrupt mode: level mode

TIMER_INTR_MAX

enum timer_autoreload_t
Select if Alarm needs to be loaded by software or automatically reload by hardware.

Values:

TIMER_AUTORELOAD_DIS = 0
Disable auto-reload: hardware will not load counter value after an alarm event

TIMER_AUTORELOAD_EN = 1
Enable auto-reload: hardware will load counter value after an alarm event

TIMER_AUTORELOAD_MAX

2.3.4 GPIO & RTC GPIO

Overview

The ESP32 chip features 40 physical GPIO pads. Some GPIO pads cannot be used or do not have the corresponding pin on the chip package. For more details, see *ESP32 Technical Reference Manual > IO MUX and GPIO Matrix (GPIO, IO_MUX)* [PDF]. Each pad can be used as a general purpose I/O or can be connected to an internal peripheral signal.

- Note that GPIO6-11 are usually used for SPI flash.
- GPIO34-39 can only be set as input mode and do not have software pullup or pulldown functions.

There is also separate "RTC GPIO" support, which functions when GPIOs are routed to the "RTC" low-power and analog subsystem. These pin functions can be used when:

- In deep sleep
- The *Ultra Low Power co-processor* is running
- Analog functions such as ADC/DAC/etc are in use.

Application Example

GPIO output and input interrupt example: peripherals/gpio/generic_gpio.

API Reference - Normal GPIO

Header File

- driver/include/driver/gpio.h

Functions

esp_err_t **gpio_config**(**const** *gpio_config_t* **pGPIOConfig*)

GPIO common configuration.

Configure GPIO' s Mode,pull-up,PullDown,IntrType

Return
- ESP_OK success
- ESP_ERR_INVALID_ARG Parameter error

Parameters
- `pGPIOConfig`: Pointer to GPIO configure struct

esp_err_t **gpio_reset_pin**(*gpio_num_t gpio_num*)

Reset an gpio to default state (select gpio function, enable pullup and disable input and output).

Note This function also configures the IOMUX for this pin to the GPIO function, and disconnects any other peripheral output configured via GPIO Matrix.

Return Always return ESP_OK.

Parameters
- `gpio_num`: GPIO number.

esp_err_t **gpio_set_intr_type**(*gpio_num_t gpio_num*, *gpio_int_type_t intr_type*)

GPIO set interrupt trigger type.

Return
- ESP_OK Success
- ESP_ERR_INVALID_ARG Parameter error

Parameters
- `gpio_num`: GPIO number. If you want to set the trigger type of e.g. of GPIO16, gpio_num should be GPIO_NUM_16 (16);
- `intr_type`: Interrupt type, select from gpio_int_type_t

esp_err_t **gpio_intr_enable**(*gpio_num_t gpio_num*)

Enable GPIO module interrupt signal.

Note Please do not use the interrupt of GPIO36 and GPIO39 when using ADC or Wi-Fi and Bluetooth with sleep mode enabled. Please refer to the comments of `adc1_get_raw`. Please refer to section 3.11 of 'ECO_and_Workarounds_for_Bugs_in_ESP32' for the description of this issue. As a workaround, call adc_power_acquire() in the app. This will result in higher power consumption (by ~1mA), but will remove the glitches on GPIO36 and GPIO39.

Return

- ESP_OK Success
- ESP_ERR_INVALID_ARG Parameter error

Parameters

- `gpio_num`: GPIO number. If you want to enable an interrupt on e.g. GPIO16, gpio_num should be GPIO_NUM_16 (16);

esp_err_t **gpio_intr_disable** (*gpio_num_t gpio_num*)

Disable GPIO module interrupt signal.

Return

- ESP_OK success
- ESP_ERR_INVALID_ARG Parameter error

Parameters

- `gpio_num`: GPIO number. If you want to disable the interrupt of e.g. GPIO16, gpio_num should be GPIO_NUM_16 (16);

esp_err_t **gpio_set_level** (*gpio_num_t gpio_num*, uint32_t *level*)

GPIO set output level.

Return

- ESP_OK Success
- ESP_ERR_INVALID_ARG GPIO number error

Parameters

- `gpio_num`: GPIO number. If you want to set the output level of e.g. GPIO16, gpio_num should be GPIO_NUM_16 (16);
- `level`: Output level. 0: low ; 1: high

int **gpio_get_level** (*gpio_num_t gpio_num*)

GPIO get input level.

Warning If the pad is not configured for input (or input and output) the returned value is always 0.

Return

- 0 the GPIO input level is 0
- 1 the GPIO input level is 1

Parameters

- `gpio_num`: GPIO number. If you want to get the logic level of e.g. pin GPIO16, gpio_num should be GPIO_NUM_16 (16);

esp_err_t **gpio_set_direction** (*gpio_num_t gpio_num*, *gpio_mode_t mode*)

GPIO set direction.

Configure GPIO direction,such as output_only,input_only,output_and_input

Return

- ESP_OK Success
- ESP_ERR_INVALID_ARG GPIO error

Parameters

- `gpio_num`: Configure GPIO pins number, it should be GPIO number. If you want to set direction of e.g. GPIO16, gpio_num should be GPIO_NUM_16 (16);
- `mode`: GPIO direction

esp_err_t **gpio_set_pull_mode** (*gpio_num_t gpio_num*, *gpio_pull_mode_t pull*)

Configure GPIO pull-up/pull-down resistors.

Only pins that support both input & output have integrated pull-up and pull-down resistors. Input-only GPIOs 34-39 do not.

Return

- ESP_OK Success
- ESP_ERR_INVALID_ARG : Parameter error

Parameters

- `gpio_num`: GPIO number. If you want to set pull up or down mode for e.g. GPIO16, gpio_num should be GPIO_NUM_16 (16);
- `pull`: GPIO pull up/down mode.

esp_err_t **gpio_wakeup_enable** (*gpio_num_t gpio_num*, *gpio_int_type_t intr_type*)

Enable GPIO wake-up function.

Return

- ESP_OK Success
- ESP_ERR_INVALID_ARG Parameter error

Parameters

- `gpio_num`: GPIO number.
- `intr_type`: GPIO wake-up type. Only GPIO_INTR_LOW_LEVEL or GPIO_INTR_HIGH_LEVEL can be used.

esp_err_t **gpio_wakeup_disable** (*gpio_num_t gpio_num*)

Disable GPIO wake-up function.

Return

- ESP_OK Success
- ESP_ERR_INVALID_ARG Parameter error

Parameters

- `gpio_num`: GPIO number

esp_err_t **gpio_isr_register** (void (**fn*)) void *

, void **arg*, int *intr_alloc_flags*, *gpio_isr_handle_t* **handle*Register GPIO interrupt handler, the handler is an ISR. The handler will be attached to the same CPU core that this function is running on.

This ISR function is called whenever any GPIO interrupt occurs. See the alternative gpio_install_isr_service() and gpio_isr_handler_add() API in order to have the driver support per-GPIO ISRs.

To disable or remove the ISR, pass the returned handle to the *interrupt allocation functions*.

Parameters

- `fn`: Interrupt handler function.
- `intr_alloc_flags`: Flags used to allocate the interrupt. One or multiple (ORred) ESP_INTR_FLAG_* values. See esp_intr_alloc.h for more info.
- `arg`: Parameter for handler function
- `handle`: Pointer to return handle. If non-NULL, a handle for the interrupt will be returned here.

Return

- ESP_OK Success ;
- ESP_ERR_INVALID_ARG GPIO error
- ESP_ERR_NOT_FOUND No free interrupt found with the specified flags

esp_err_t **gpio_pullup_en** (*gpio_num_t gpio_num*)

Enable pull-up on GPIO.

Return

- ESP_OK Success
- ESP_ERR_INVALID_ARG Parameter error

Parameters

- `gpio_num`: GPIO number

esp_err_t **gpio_pullup_dis** (*gpio_num_t gpio_num*)

Disable pull-up on GPIO.

Return

- ESP_OK Success
- ESP_ERR_INVALID_ARG Parameter error

Parameters

- `gpio_num`: GPIO number

esp_err_t **gpio_pulldown_en** (*gpio_num_t gpio_num*)
Enable pull-down on GPIO.

Return
- ESP_OK Success
- ESP_ERR_INVALID_ARG Parameter error

Parameters
- `gpio_num`: GPIO number

esp_err_t **gpio_pulldown_dis** (*gpio_num_t gpio_num*)
Disable pull-down on GPIO.

Return
- ESP_OK Success
- ESP_ERR_INVALID_ARG Parameter error

Parameters
- `gpio_num`: GPIO number

esp_err_t **gpio_install_isr_service** (int *intr_alloc_flags*)
Install the driver's GPIO ISR handler service, which allows per-pin GPIO interrupt handlers.

This function is incompatible with gpio_isr_register() - if that function is used, a single global ISR is registered for all GPIO interrupts. If this function is used, the ISR service provides a global GPIO ISR and individual pin handlers are registered via the gpio_isr_handler_add() function.

Return
- ESP_OK Success
- ESP_ERR_NO_MEM No memory to install this service
- ESP_ERR_INVALID_STATE ISR service already installed.
- ESP_ERR_NOT_FOUND No free interrupt found with the specified flags
- ESP_ERR_INVALID_ARG GPIO error

Parameters
- `intr_alloc_flags`: Flags used to allocate the interrupt. One or multiple (ORred) ESP_INTR_FLAG_* values. See esp_intr_alloc.h for more info.

void **gpio_uninstall_isr_service** (void)
Uninstall the driver's GPIO ISR service, freeing related resources.

esp_err_t **gpio_isr_handler_add** (*gpio_num_t gpio_num*, *gpio_isr_t isr_handler*, void **args*)
Add ISR handler for the corresponding GPIO pin.

Call this function after using gpio_install_isr_service() to install the driver's GPIO ISR handler service.

The pin ISR handlers no longer need to be declared with IRAM_ATTR, unless you pass the ESP_INTR_FLAG_IRAM flag when allocating the ISR in gpio_install_isr_service().

This ISR handler will be called from an ISR. So there is a stack size limit (configurable as "ISR stack size" in menuconfig). This limit is smaller compared to a global GPIO interrupt handler due to the additional level of indirection.

Return
- ESP_OK Success
- ESP_ERR_INVALID_STATE Wrong state, the ISR service has not been initialized.
- ESP_ERR_INVALID_ARG Parameter error

Parameters
- `gpio_num`: GPIO number
- `isr_handler`: ISR handler function for the corresponding GPIO number.
- `args`: parameter for ISR handler.

esp_err_t **gpio_isr_handler_remove** (*gpio_num_t gpio_num*)
Remove ISR handler for the corresponding GPIO pin.

Return
- ESP_OK Success
- ESP_ERR_INVALID_STATE Wrong state, the ISR service has not been initialized.

- ESP_ERR_INVALID_ARG Parameter error

Parameters

- `gpio_num`: GPIO number

esp_err_t **gpio_set_drive_capability** (*gpio_num_t gpio_num*, *gpio_drive_cap_t strength*)

Set GPIO pad drive capability.

Return

- ESP_OK Success
- ESP_ERR_INVALID_ARG Parameter error

Parameters

- `gpio_num`: GPIO number, only support output GPIOs
- `strength`: Drive capability of the pad

esp_err_t **gpio_get_drive_capability** (*gpio_num_t gpio_num*, *gpio_drive_cap_t *strength*)

Get GPIO pad drive capability.

Return

- ESP_OK Success
- ESP_ERR_INVALID_ARG Parameter error

Parameters

- `gpio_num`: GPIO number, only support output GPIOs
- `strength`: Pointer to accept drive capability of the pad

esp_err_t **gpio_hold_en** (*gpio_num_t gpio_num*)

Enable gpio pad hold function.

When the pin is set to hold, the state is latched at that moment and will not change no matter how the internal signals change or how the IO MUX/GPIO configuration is modified (including input enable, output enable, output value, function, and drive strength values). It can be used to retain the pin state through a core reset and system reset triggered by watchdog time-out or Deep-sleep events.

The gpio pad hold function works in both input and output modes, but must be output-capable gpios. If pad hold enabled: in output mode: the output level of the pad will be force locked and can not be changed. in input mode: input read value can still reflect the changes of the input signal.

The state of the digital gpio cannot be held during Deep-sleep, and it will resume to hold at its default pin state when the chip wakes up from Deep-sleep. If the digital gpio also needs to be held during Deep-sleep, `gpio_deep_sleep_hold_en` should also be called.

Power down or call `gpio_hold_dis` will disable this function.

Return

- ESP_OK Success
- ESP_ERR_NOT_SUPPORTED Not support pad hold function

Parameters

- `gpio_num`: GPIO number, only support output-capable GPIOs

esp_err_t **gpio_hold_dis** (*gpio_num_t gpio_num*)

Disable gpio pad hold function.

When the chip is woken up from Deep-sleep, the gpio will be set to the default mode, so, the gpio will output the default level if this function is called. If you don't want the level changes, the gpio should be configured to a known state before this function is called. e.g. If you hold gpio18 high during Deep-sleep, after the chip is woken up and `gpio_hold_dis` is called, gpio18 will output low level(because gpio18 is input mode by default). If you don't want this behavior, you should configure gpio18 as output mode and set it to hight level before calling `gpio_hold_dis`.

Return

- ESP_OK Success
- ESP_ERR_NOT_SUPPORTED Not support pad hold function

Parameters

- `gpio_num`: GPIO number, only support output-capable GPIOs

void **gpio_deep_sleep_hold_en**(void)
Enable all digital gpio pads hold function during Deep-sleep.

Enabling this feature makes all digital gpio pads be at the holding state during Deep-sleep. The state of each pad holds is its active configuration (not pad's sleep configuration!).

Note that this pad hold feature only works when the chip is in Deep-sleep mode. When the chip is in active mode, the digital gpio state can be changed freely even you have called this function.

After this API is being called, the digital gpio Deep-sleep hold feature will work during every sleep process. You should call `gpio_deep_sleep_hold_dis` to disable this feature.

void **gpio_deep_sleep_hold_dis**(void)
Disable all digital gpio pads hold function during Deep-sleep.

void **gpio_iomux_in**(uint32_t *gpio_num*, uint32_t *signal_idx*)
Set pad input to a peripheral signal through the IOMUX.

Parameters
- `gpio_num`: GPIO number of the pad.
- `signal_idx`: Peripheral signal id to input. One of the `*_IN_IDX` signals in `soc/gpio_sig_map.h`.

void **gpio_iomux_out**(uint8_t *gpio_num*, int *func*, bool *oen_inv*)
Set peripheral output to an GPIO pad through the IOMUX.

Parameters
- `gpio_num`: gpio_num GPIO number of the pad.
- `func`: The function number of the peripheral pin to output pin. One of the `FUNC_X_*` of specified pin (X) in `soc/io_mux_reg.h`.
- `oen_inv`: True if the output enable needs to be inverted, otherwise False.

esp_err_t **gpio_sleep_sel_en**(*gpio_num_t gpio_num*)
Enable SLP_SEL to change GPIO status automantically in lightsleep.

Return
- ESP_OK Success

Parameters
- `gpio_num`: GPIO number of the pad.

esp_err_t **gpio_sleep_sel_dis**(*gpio_num_t gpio_num*)
Disable SLP_SEL to change GPIO status automantically in lightsleep.

Return
- ESP_OK Success

Parameters
- `gpio_num`: GPIO number of the pad.

esp_err_t **gpio_sleep_set_direction**(*gpio_num_t gpio_num*, *gpio_mode_t mode*)
GPIO set direction at sleep.

Configure GPIO direction,such as output_only,input_only,output_and_input

Return
- ESP_OK Success
- ESP_ERR_INVALID_ARG GPIO error

Parameters
- `gpio_num`: Configure GPIO pins number, it should be GPIO number. If you want to set direction of e.g. GPIO16, gpio_num should be GPIO_NUM_16 (16);
- `mode`: GPIO direction

esp_err_t **gpio_sleep_set_pull_mode**(*gpio_num_t gpio_num*, *gpio_pull_mode_t pull*)
Configure GPIO pull-up/pull-down resistors at sleep.

Only pins that support both input & output have integrated pull-up and pull-down resistors. Input-only GPIOs 34-39 do not.

Return

- ESP_OK Success
- ESP_ERR_INVALID_ARG : Parameter error

Parameters

- `gpio_num`: GPIO number. If you want to set pull up or down mode for e.g. GPIO16, gpio_num should be GPIO_NUM_16 (16);
- `pull`: GPIO pull up/down mode.

Macros

GPIO_PIN_COUNT

GPIO_IS_VALID_GPIO(gpio_num)
Check whether it is a valid GPIO number.

GPIO_IS_VALID_OUTPUT_GPIO(gpio_num)
Check whether it can be a valid GPIO number of output mode.

GPIO_IS_VALID_DIGITAL_IO_PAD(gpio_num)
Check whether it can be a valid digital I/O pad.

Type Definitions

typedef *intr_handle_t* **gpio_isr_handle_t**

Header File

- hal/include/hal/gpio_types.h

Structures

struct gpio_config_t
Configuration parameters of GPIO pad for gpio_config function.

Public Members

uint64_t **pin_bit_mask**
GPIO pin: set with bit mask, each bit maps to a GPIO

gpio_mode_t **mode**
GPIO mode: set input/output mode

gpio_pullup_t **pull_up_en**
GPIO pull-up

gpio_pulldown_t **pull_down_en**
GPIO pull-down

gpio_int_type_t **intr_type**
GPIO interrupt type

Macros

GPIO_SEL_0
Pin 0 selected

GPIO_SEL_1
Pin 1 selected

GPIO_SEL_2
Pin 2 selected

GPIO_SEL_3
Pin 3 selected

GPIO_SEL_4
Pin 4 selected

GPIO_SEL_5
Pin 5 selected

GPIO_SEL_6
Pin 6 selected

GPIO_SEL_7
Pin 7 selected

GPIO_SEL_8
Pin 8 selected

GPIO_SEL_9
Pin 9 selected

GPIO_SEL_10
Pin 10 selected

GPIO_SEL_11
Pin 11 selected

GPIO_SEL_12
Pin 12 selected

GPIO_SEL_13
Pin 13 selected

GPIO_SEL_14
Pin 14 selected

GPIO_SEL_15
Pin 15 selected

GPIO_SEL_16
Pin 16 selected

GPIO_SEL_17
Pin 17 selected

GPIO_SEL_18
Pin 18 selected

GPIO_SEL_19
Pin 19 selected

GPIO_SEL_20
Pin 20 selected

GPIO_SEL_21
Pin 21 selected

GPIO_SEL_22
Pin 22 selected

GPIO_SEL_23
Pin 23 selected

GPIO_SEL_25
Pin 25 selected

GPIO_SEL_26
Pin 26 selected

GPIO_SEL_27
Pin 27 selected

GPIO_SEL_28
Pin 28 selected

GPIO_SEL_29
Pin 29 selected

GPIO_SEL_30
Pin 30 selected

GPIO_SEL_31
Pin 31 selected

GPIO_SEL_32
Pin 32 selected

GPIO_SEL_33
Pin 33 selected

GPIO_SEL_34
Pin 34 selected

GPIO_SEL_35
Pin 35 selected

GPIO_SEL_36
Pin 36 selected

GPIO_SEL_37
Pin 37 selected

GPIO_SEL_38
Pin 38 selected

GPIO_SEL_39
Pin 39 selected

GPIO_PIN_REG_0

GPIO_PIN_REG_1

GPIO_PIN_REG_2

GPIO_PIN_REG_3

GPIO_PIN_REG_4

GPIO_PIN_REG_5

GPIO_PIN_REG_6

GPIO_PIN_REG_7

GPIO_PIN_REG_8

GPIO_PIN_REG_9

GPIO_PIN_REG_10

GPIO_PIN_REG_11

GPIO_PIN_REG_12

GPIO_PIN_REG_13

GPIO_PIN_REG_14

GPIO_PIN_REG_15

GPIO_PIN_REG_16

GPIO_PIN_REG_17

GPIO_PIN_REG_18

GPIO_PIN_REG_19

GPIO_PIN_REG_20

GPIO_PIN_REG_21

GPIO_PIN_REG_22

GPIO_PIN_REG_23

GPIO_PIN_REG_24

GPIO_PIN_REG_25

GPIO_PIN_REG_26

GPIO_PIN_REG_27

GPIO_PIN_REG_28

GPIO_PIN_REG_29

GPIO_PIN_REG_30

GPIO_PIN_REG_31

GPIO_PIN_REG_32

GPIO_PIN_REG_33

GPIO_PIN_REG_34

GPIO_PIN_REG_35

GPIO_PIN_REG_36

GPIO_PIN_REG_37

GPIO_PIN_REG_38

GPIO_PIN_REG_39

GPIO_PIN_REG_40

GPIO_PIN_REG_41

GPIO_PIN_REG_42

GPIO_PIN_REG_43

GPIO_PIN_REG_44

GPIO_PIN_REG_45

GPIO_PIN_REG_46

Type Definitions

typedef void (***gpio_isr_t**) (void *)

Enumerations

enum gpio_port_t

Values:

GPIO_PORT_0 = 0

GPIO_PORT_MAX

enum gpio_num_t

Values:

GPIO_NUM_NC = -1

Use to signal not connected to S/W

GPIO_NUM_0 = 0
GPIO0, input and output

GPIO_NUM_1 = 1
GPIO1, input and output

GPIO_NUM_2 = 2
GPIO2, input and output

GPIO_NUM_3 = 3
GPIO3, input and output

GPIO_NUM_4 = 4
GPIO4, input and output

GPIO_NUM_5 = 5
GPIO5, input and output

GPIO_NUM_6 = 6
GPIO6, input and output

GPIO_NUM_7 = 7
GPIO7, input and output

GPIO_NUM_8 = 8
GPIO8, input and output

GPIO_NUM_9 = 9
GPIO9, input and output

GPIO_NUM_10 = 10
GPIO10, input and output

GPIO_NUM_11 = 11
GPIO11, input and output

GPIO_NUM_12 = 12
GPIO12, input and output

GPIO_NUM_13 = 13
GPIO13, input and output

GPIO_NUM_14 = 14
GPIO14, input and output

GPIO_NUM_15 = 15
GPIO15, input and output

GPIO_NUM_16 = 16
GPIO16, input and output

GPIO_NUM_17 = 17
GPIO17, input and output

GPIO_NUM_18 = 18
GPIO18, input and output

GPIO_NUM_19 = 19
GPIO19, input and output

GPIO_NUM_20 = 20
GPIO20, input and output

GPIO_NUM_21 = 21
GPIO21, input and output

GPIO_NUM_22 = 22
GPIO22, input and output

GPIO_NUM_23 = 23
GPIO23, input and output

GPIO_NUM_25 = 25
GPIO25, input and output

GPIO_NUM_26 = 26
GPIO26, input and output

GPIO_NUM_27 = 27
GPIO27, input and output

GPIO_NUM_28 = 28
GPIO28, input and output

GPIO_NUM_29 = 29
GPIO29, input and output

GPIO_NUM_30 = 30
GPIO30, input and output

GPIO_NUM_31 = 31
GPIO31, input and output

GPIO_NUM_32 = 32
GPIO32, input and output

GPIO_NUM_33 = 33
GPIO33, input and output

GPIO_NUM_34 = 34
GPIO34, input mode only

GPIO_NUM_35 = 35
GPIO35, input mode only

GPIO_NUM_36 = 36
GPIO36, input mode only

GPIO_NUM_37 = 37
GPIO37, input mode only

GPIO_NUM_38 = 38
GPIO38, input mode only

GPIO_NUM_39 = 39
GPIO39, input mode only

GPIO_NUM_MAX

enum gpio_int_type_t
Values:

GPIO_INTR_DISABLE = 0
Disable GPIO interrupt

GPIO_INTR_POSEDGE = 1
GPIO interrupt type : rising edge

GPIO_INTR_NEGEDGE = 2
GPIO interrupt type : falling edge

GPIO_INTR_ANYEDGE = 3
GPIO interrupt type : both rising and falling edge

GPIO_INTR_LOW_LEVEL = 4
GPIO interrupt type : input low level trigger

GPIO_INTR_HIGH_LEVEL = 5
GPIO interrupt type : input high level trigger

GPIO_INTR_MAX

enum gpio_mode_t

Values:

GPIO_MODE_DISABLE = GPIO_MODE_DEF_DISABLE
GPIO mode : disable input and output

GPIO_MODE_INPUT = GPIO_MODE_DEF_INPUT
GPIO mode : input only

GPIO_MODE_OUTPUT = GPIO_MODE_DEF_OUTPUT
GPIO mode : output only mode

GPIO_MODE_OUTPUT_OD = ((GPIO_MODE_DEF_OUTPUT) | (GPIO_MODE_DEF_OD))
GPIO mode : output only with open-drain mode

GPIO_MODE_INPUT_OUTPUT_OD = ((GPIO_MODE_DEF_INPUT) | (GPIO_MODE_DEF_OUTPUT) | (GPIO_MODE_
GPIO mode : output and input with open-drain mode

GPIO_MODE_INPUT_OUTPUT = ((GPIO_MODE_DEF_INPUT) | (GPIO_MODE_DEF_OUTPUT))
GPIO mode : output and input mode

enum gpio_pullup_t

Values:

GPIO_PULLUP_DISABLE = 0x0
Disable GPIO pull-up resistor

GPIO_PULLUP_ENABLE = 0x1
Enable GPIO pull-up resistor

enum gpio_pulldown_t

Values:

GPIO_PULLDOWN_DISABLE = 0x0
Disable GPIO pull-down resistor

GPIO_PULLDOWN_ENABLE = 0x1
Enable GPIO pull-down resistor

enum gpio_pull_mode_t

Values:

GPIO_PULLUP_ONLY
Pad pull up

GPIO_PULLDOWN_ONLY
Pad pull down

GPIO_PULLUP_PULLDOWN
Pad pull up + pull down

GPIO_FLOATING
Pad floating

enum gpio_drive_cap_t

Values:

GPIO_DRIVE_CAP_0 = 0
Pad drive capability: weak

GPIO_DRIVE_CAP_1 = 1
Pad drive capability: stronger

GPIO_DRIVE_CAP_2 = 2
Pad drive capability: medium

GPIO_DRIVE_CAP_DEFAULT = 2
Pad drive capability: medium

GPIO_DRIVE_CAP_3 = 3
Pad drive capability: strongest

GPIO_DRIVE_CAP_MAX

API Reference - RTC GPIO

Header File

- driver/include/driver/rtc_io.h

Functions

static bool **rtc_gpio_is_valid_gpio** (*gpio_num_t gpio_num*)
Determine if the specified GPIO is a valid RTC GPIO.

Return true if GPIO is valid for RTC GPIO use. false otherwise.
Parameters
- gpio_num: GPIO number

static int **rtc_io_number_get** (*gpio_num_t gpio_num*)
Get RTC IO index number by gpio number.

Return >=0: Index of rtcio. -1 : The gpio is not rtcio.
Parameters
- gpio_num: GPIO number

esp_err_t **rtc_gpio_init** (*gpio_num_t gpio_num*)
Init a GPIO as RTC GPIO.

This function must be called when initializing a pad for an analog function.

Return
- ESP_OK success
- ESP_ERR_INVALID_ARG GPIO is not an RTC IO

Parameters
- gpio_num: GPIO number (e.g. GPIO_NUM_12)

esp_err_t **rtc_gpio_deinit** (*gpio_num_t gpio_num*)
Init a GPIO as digital GPIO.

Return
- ESP_OK success
- ESP_ERR_INVALID_ARG GPIO is not an RTC IO

Parameters
- gpio_num: GPIO number (e.g. GPIO_NUM_12)

uint32_t **rtc_gpio_get_level** (*gpio_num_t gpio_num*)
Get the RTC IO input level.

Return
- 1 High level
- 0 Low level
- ESP_ERR_INVALID_ARG GPIO is not an RTC IO

Parameters
- gpio_num: GPIO number (e.g. GPIO_NUM_12)

esp_err_t **rtc_gpio_set_level** (*gpio_num_t gpio_num*, uint32_t *level*)
Set the RTC IO output level.

Return
- ESP_OK Success
- ESP_ERR_INVALID_ARG GPIO is not an RTC IO

Parameters
- gpio_num: GPIO number (e.g. GPIO_NUM_12)

- `level`: output level

esp_err_t **rtc_gpio_set_direction**(*gpio_num_t gpio_num*, *rtc_gpio_mode_t mode*)

RTC GPIO set direction.

Configure RTC GPIO direction, such as output only, input only, output and input.

Return
- ESP_OK Success
- ESP_ERR_INVALID_ARG GPIO is not an RTC IO

Parameters
- `gpio_num`: GPIO number (e.g. GPIO_NUM_12)
- `mode`: GPIO direction

esp_err_t **rtc_gpio_set_direction_in_sleep**(*gpio_num_t gpio_num*, *rtc_gpio_mode_t mode*)

RTC GPIO set direction in deep sleep mode or disable sleep status (default). In some application scenarios, IO needs to have another states during deep sleep.

NOTE: ESP32 support INPUT_ONLY mode. ESP32S2 support INPUT_ONLY, OUTPUT_ONLY, INPUT_OUTPUT mode.

Return
- ESP_OK Success
- ESP_ERR_INVALID_ARG GPIO is not an RTC IO

Parameters
- `gpio_num`: GPIO number (e.g. GPIO_NUM_12)
- `mode`: GPIO direction

esp_err_t **rtc_gpio_pullup_en**(*gpio_num_t gpio_num*)

RTC GPIO pullup enable.

This function only works for RTC IOs. In general, call gpio_pullup_en, which will work both for normal GPIOs and RTC IOs.

Return
- ESP_OK Success
- ESP_ERR_INVALID_ARG GPIO is not an RTC IO

Parameters
- `gpio_num`: GPIO number (e.g. GPIO_NUM_12)

esp_err_t **rtc_gpio_pulldown_en**(*gpio_num_t gpio_num*)

RTC GPIO pulldown enable.

This function only works for RTC IOs. In general, call gpio_pulldown_en, which will work both for normal GPIOs and RTC IOs.

Return
- ESP_OK Success
- ESP_ERR_INVALID_ARG GPIO is not an RTC IO

Parameters
- `gpio_num`: GPIO number (e.g. GPIO_NUM_12)

esp_err_t **rtc_gpio_pullup_dis**(*gpio_num_t gpio_num*)

RTC GPIO pullup disable.

This function only works for RTC IOs. In general, call gpio_pullup_dis, which will work both for normal GPIOs and RTC IOs.

Return
- ESP_OK Success
- ESP_ERR_INVALID_ARG GPIO is not an RTC IO

Parameters
- `gpio_num`: GPIO number (e.g. GPIO_NUM_12)

esp_err_t **rtc_gpio_pulldown_dis**(*gpio_num_t gpio_num*)

RTC GPIO pulldown disable.

This function only works for RTC IOs. In general, call gpio_pulldown_dis, which will work both for normal GPIOs and RTC IOs.

Return
- ESP_OK Success
- ESP_ERR_INVALID_ARG GPIO is not an RTC IO

Parameters
- `gpio_num`: GPIO number (e.g. GPIO_NUM_12)

esp_err_t **rtc_gpio_set_drive_capability**(*gpio_num_t gpio_num*, *gpio_drive_cap_t strength*)
Set RTC GPIO pad drive capability.

Return
- ESP_OK Success
- ESP_ERR_INVALID_ARG Parameter error

Parameters
- `gpio_num`: GPIO number, only support output GPIOs
- `strength`: Drive capability of the pad

esp_err_t **rtc_gpio_get_drive_capability**(*gpio_num_t gpio_num*, *gpio_drive_cap_t *strength*)
Get RTC GPIO pad drive capability.

Return
- ESP_OK Success
- ESP_ERR_INVALID_ARG Parameter error

Parameters
- `gpio_num`: GPIO number, only support output GPIOs
- `strength`: Pointer to accept drive capability of the pad

esp_err_t **rtc_gpio_hold_en**(*gpio_num_t gpio_num*)
Enable hold function on an RTC IO pad.

Enabling HOLD function will cause the pad to latch current values of input enable, output enable, output value, function, drive strength values. This function is useful when going into light or deep sleep mode to prevent the pin configuration from changing.

Return
- ESP_OK Success
- ESP_ERR_INVALID_ARG GPIO is not an RTC IO

Parameters
- `gpio_num`: GPIO number (e.g. GPIO_NUM_12)

esp_err_t **rtc_gpio_hold_dis**(*gpio_num_t gpio_num*)
Disable hold function on an RTC IO pad.

Disabling hold function will allow the pad receive the values of input enable, output enable, output value, function, drive strength from RTC_IO peripheral.

Return
- ESP_OK Success
- ESP_ERR_INVALID_ARG GPIO is not an RTC IO

Parameters
- `gpio_num`: GPIO number (e.g. GPIO_NUM_12)

esp_err_t **rtc_gpio_isolate**(*gpio_num_t gpio_num*)
Helper function to disconnect internal circuits from an RTC IO This function disables input, output, pullup, pulldown, and enables hold feature for an RTC IO. Use this function if an RTC IO needs to be disconnected from internal circuits in deep sleep, to minimize leakage current.

In particular, for ESP32-WROVER module, call rtc_gpio_isolate(GPIO_NUM_12) before entering deep sleep, to reduce deep sleep current.

Return
- ESP_OK on success
- ESP_ERR_INVALID_ARG if GPIO is not an RTC IO

Parameters

- `gpio_num`: GPIO number (e.g. GPIO_NUM_12).

esp_err_t **rtc_gpio_force_hold_en_all**(void)

Enable force hold signal for all RTC IOs.

Each RTC pad has a "force hold" input signal from the RTC controller. If this signal is set, pad latches current values of input enable, function, output enable, and other signals which come from the RTC mux. Force hold signal is enabled before going into deep sleep for pins which are used for EXT1 wakeup.

esp_err_t **rtc_gpio_force_hold_dis_all**(void)

Disable force hold signal for all RTC IOs.

esp_err_t **rtc_gpio_wakeup_enable**(*gpio_num_t gpio_num*, *gpio_int_type_t intr_type*)

Enable wakeup from sleep mode using specific GPIO.

Return

- ESP_OK on success
- ESP_ERR_INVALID_ARG if gpio_num is not an RTC IO, or intr_type is not one of GPIO_INTR_HIGH_LEVEL, GPIO_INTR_LOW_LEVEL.

Parameters

- `gpio_num`: GPIO number
- `intr_type`: Wakeup on high level (GPIO_INTR_HIGH_LEVEL) or low level (GPIO_INTR_LOW_LEVEL)

esp_err_t **rtc_gpio_wakeup_disable**(*gpio_num_t gpio_num*)

Disable wakeup from sleep mode using specific GPIO.

Return

- ESP_OK on success
- ESP_ERR_INVALID_ARG if gpio_num is not an RTC IO

Parameters

- `gpio_num`: GPIO number

Macros

RTC_GPIO_IS_VALID_GPIO(gpio_num)

Header File

- hal/include/hal/rtc_io_types.h

Enumerations

enum rtc_gpio_mode_t

RTCIO output/input mode type.

Values:

RTC_GPIO_MODE_INPUT_ONLY

Pad input

RTC_GPIO_MODE_OUTPUT_ONLY

Pad output

RTC_GPIO_MODE_INPUT_OUTPUT

Pad input + output

RTC_GPIO_MODE_DISABLED

Pad (output + input) disable

RTC_GPIO_MODE_OUTPUT_OD

Pad open-drain output

RTC_GPIO_MODE_INPUT_OUTPUT_OD

Pad input + open-drain output

2.3.5 I2C 驱动程序

概述

I2C 是一种串行同步半双工式通信协议，总线上可以同时挂载多个主机和从机。I2C 总线由串行数据线 (SDA) 线和串行时钟线 (SCL) 线构成。这些线都需要上拉电阻。

I2C 具有简单且制造成本低廉等优点，主要用于低速外围设备的短距离通信（一英尺以内）。

ESP32 有两个 I2C 控制器（也称为端口），负责处理在 I2C 两根总线上的通信。每个控制器都可以设置为主机或从机。例如，可以同时让一个控制器用作主机，另一个用作从机。

驱动程序的功能

I2C 驱动程序管理在 I2C 总线上设备的通信，该驱动程序具备以下功能：

- 在主机模式下读写字节
- 支持从机模式
- 读取并写入寄存器，然后由主机读取/写入

使用驱动程序

以下部分将指导您完成 I2C 驱动程序配置和工作的基本步骤：

1. 配置驱动程序 - 设置初始化参数（如主机模式或从机模式，SDA 和 SCL 使用的 GPIO 管脚，时钟速度等）
2. 安装驱动程序- 激活一个 I2C 控制器的驱动，该控制器可为主机也可为从机
3. 根据是为主机还是从机配置驱动程序，选择合适的项目
   a) 主机模式下通信 - 发起通信（主机模式）
   b) 从机模式下通信 - 响应主机消息（从机模式）
4. 中断处理 - 配置和 I2C 中断服务
5. 用户自定义配置 - 调整默认的 I2C 通信参数（如时序、位序等）
6. 错误处理 - 如何识别和处理驱动程序配置和通信错误
7. 删除驱动程序- 在通信结束时释放 I2C 驱动程序所使用的资源

配置驱动程序 建立 I2C 通信第一步是配置驱动程序，这需要设置`i2c_config_t` 结构中的几个参数：

- 设置 I2C **工作模式** - 从`i2c_mode_t` 中选择主机模式或从机模式
- 设置 **通信管脚**
  - 指定 SDA 和 SCL 信号使用的 GPIO 管脚
  - 是否启用 ESP32 的内部上拉电阻
- （仅限主机模式）设置 I2C **时钟速度**
- （仅限从机模式）设置以下内容：
  - 是否应启用 **10 位寻址模式**
  - 定义 **从机地址**

然后，初始化给定 I2C 端口的配置，请使用端口号和`i2c_config_t` 作为函数调用参数来调用`i2c_param_config()` 函数。

在此阶段，`i2c_param_config()` 还将其他 I2C 配置参数设置为 I2C 总线协议规范中定义的默认值。有关默认值及修改默认值的详细信息，请参考用户自定义配置。

注解： SCL 的时钟频率会被上拉电阻和线上电容（或是从机电容）一起影响。因此，用户需要自己选择合适的上拉电阻去保证 SCL 时钟频率是准确的。尽管 I2C 协议推荐上拉电阻值为 1K 欧姆到 10K 欧姆，但是需要根据不同的频率需要选择不同的上拉电阻。

通常来说，所选择的频率越高，需要的上拉电阻越小（但是不要小于 1K 欧姆）。这是因为高电阻会减小电流，这会延长上升时间从而是频率变慢。通常我们推荐的上拉阻值范围为 2K 欧姆到 5K 欧姆，但是用户可能也需要根据他们的实际情况做出一些调整。

安装驱动程序 配置好 I2C 驱动程序后，使用以下参数调用函数 `i2c_driver_install()` 安装驱动程序:

- 端口号，从 `i2c_port_t` 中二选一
- 主机或从机模式，从 `i2c_mode_t` 中选择
- （仅限从机模式）分配用于在从机模式下发送和接收数据的缓存区大小。I2C 是一个以主机为中心的总线，数据只能根据主机的请求从从机传输到主机。因此，从机通常有一个发送缓存区，供从应用程序写入数据使用。数据保留在发送缓存区中，由主机自行读取。
- 用于分配中断的标志（请参考 ESP_INTR_FLAG_* values in esp_system/include/esp_intr_alloc.h）

主机模式下通信 安装 I2C 驱动程序后，ESP32 即可与其他 I2C 设备通信。

ESP32 的 I2C 控制器在主机模式下负责与 I2C 从机设备建立通信，并发送命令让从机响应，如进行测量并将结果发给主机。

为优化通信流程，驱动程序提供一个名为“命令链接”的容器，该容器应填充一系列命令，然后传递给 I2C 控制器执行。

主机写入数据 下面的示例展示如何为 I2C 主机构建命令链接，从而向从机发送 *n* 个字节。

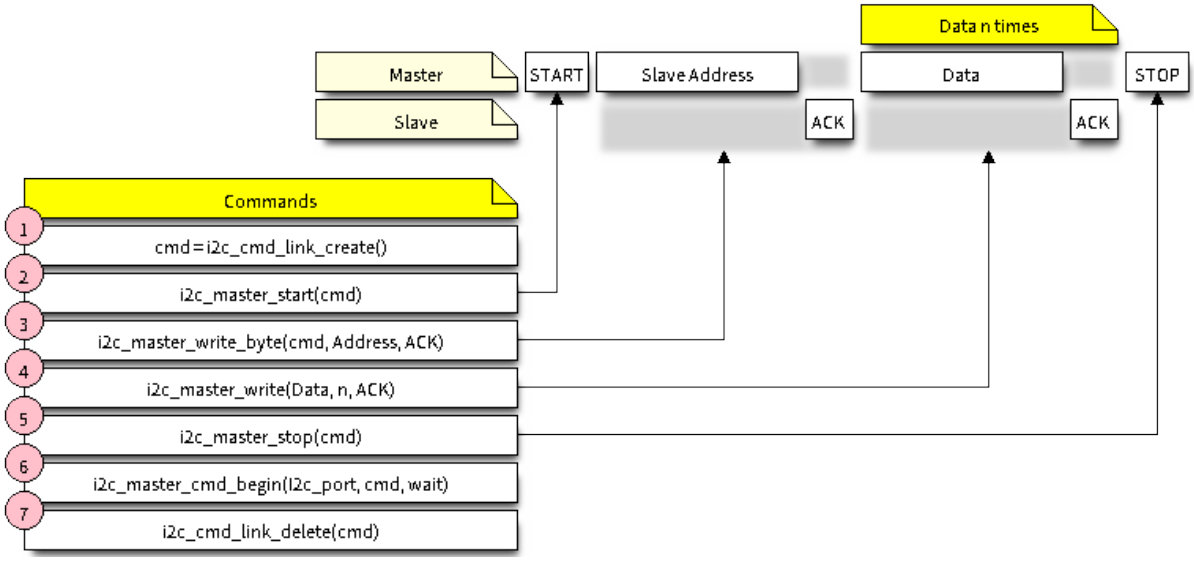

图 7: I2C command link - master write example

下面介绍如何为“主机写入数据”设置命令链接及其内部内容:

1. 使用 `i2c_cmd_link_create()` 创建一个命令链接。
   然后，将一系列待发送给从机的数据填充命令链接:
   a) **启动位** - `i2c_master_start()`
   b) **从机地址** - `i2c_master_write_byte()`。提供单字节地址作为调用此函数的实参。
   c) **数据** - 一个或多个字节的数据作为 `i2c_master_write()` 的实参。
   d) **停止位** - `i2c_master_stop()`
   函数 `i2c_master_write_byte()` 和 `i2c_master_write()` 都有额外的实参，规定主机是否应确认其有无接受到 ACK 位。
2. 通过调用 `i2c_master_cmd_begin()` 来触发 I2C 控制器执行命令链接。一旦开始执行，就不能再修改命令链接。
3. 命令发送后，通过调用 `i2c_cmd_link_delete()` 释放命令链接使用的资源。

主机读取数据 下面的示例展示如何为 I2C 主机构建命令链接，以便从从机读取 *n* 个字节。

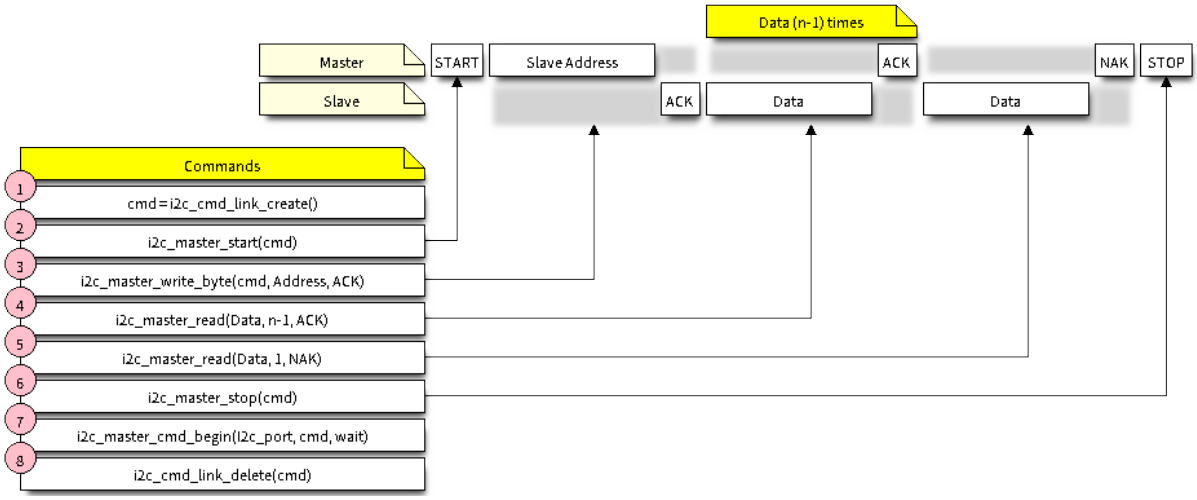

图 8: I2C command link - master read example

在读取数据时，在上图的步骤 4 中，不是用 `i2c_master_write...`，而是用*i2c_master_read_byte()* 和/或*i2c_master_read()* 填充命令链接。同样，在步骤 5 中配置最后一次的读取，以便主机不提供 ACK 位。

指示写入或读取数据 发送从机地址后（请参考上图中第 3 步），主机可以写入或从从机读取数据。

主机实际执行的操作信息存储在从机地址的最低有效位中。

因此，为了将数据写入从机，主机发送的命令链接应包含地址 `(ESP_SLAVE_ADDR << 1) | I2C_MASTER_WRITE`，如下所示：

```
i2c_master_write_byte(cmd, (ESP_SLAVE_ADDR << 1) | I2C_MASTER_WRITE, ACK_EN);
```

同理，指示从从机读取数据的命令链接如下所示：

```
i2c_master_write_byte(cmd, (ESP_SLAVE_ADDR << 1) | I2C_MASTER_READ, ACK_EN);
```

从机模式下通信 安装 I2C 驱动程序后，ESP32 即可与其他 I2C 设备通信。

API 为从机提供以下功能：

- *i2c_slave_read_buffer()*
  当主机将数据写入从机时，从机将自动将其存储在接收缓存区中。从机应用程序可自行调用函数*i2c_slave_read_buffer()*。如果接收缓存区中没有数据，此函数还具有一个参数用于指定阻塞时间。这将允许从机应用程序在指定的超时设定内等待数据到达缓存区。
- *i2c_slave_write_buffer()*
  发送缓存区是用于存储从机要以 FIFO 顺序发送给主机的所有数据。在主机请求接收前，这些数据一直存储在发送缓存区。函数*i2c_slave_write_buffer()* 有一个参数，用于指定发送缓存区已满时的块时间。这将允许从机应用程序在指定的超时设定内等待发送缓存区中足够的可用空间。

在 peripherals/i2c 中可找到介绍如何使用这些功能的代码示例。

中断处理 安装驱动程序时，默认情况下会安装中断处理程序。但是，您可以通过调用函数*i2c_isr_register()* 来注册自己的而不是默认的中断处理程序。在运行自己的中断处理程序时，可以参考 ESP32 的技术参考手册（PDF），以获取有关 I2C 控制器触发的中断描述。

调用函数*i2c_isr_free()* 删除中断处理程序。

用户自定义配置 如本节末尾所述配置驱动程序，函数*i2c_param_config()* 在初始化 I2C 端口的驱动程序配置时，也会将几个 I2C 通信参数设置为 I2C 总线协议规范 规定的默认值。其他一些相关参数已在 I2C 控制器的寄存器中预先配置。

通过调用下表中提供的专用函数，可以将所有这些参数更改为用户自定义值。请注意，时序值是在 APB 时钟周期中定义。APB 的频率在 I2C_APB_CLK_FREQ 中指定。

表 1: 其他可配置的 I2C 通信参数

要更改的参数	函数
SCL 脉冲周期的高电平和低电平	*i2c_set_period()*
在产生 **启动**信号期间使用的 SCL 和 SDA 信号时序	*i2c_set_start_timing()*
在产生 **停止**信号期间使用的 SCL 和 SDA 信号时序	*i2c_set_stop_timing()*
从机采样以及主机切换时，SCL 和 SDA 信号之间的时序关系	*i2c_set_data_timing()*
I2C 超时	*i2c_set_timeout()*
优先发送/接收最高有效位 (LSB) 或最低有效位 (MSB)，可在*i2c_trans_mode_t* 定义的模式中选择	*i2c_set_data_mode()*

上述每个函数都有一个 *_get_* 对应项来检查当前设置的值。例如，调用*i2c_get_timeout()* 来检查 I2C 超时值。

要检查在驱动程序配置过程中设置的参数默认值，请参考文件 driver/i2c.c 并查找带有后缀 _DEFAULT 的定义。

通过函数*i2c_set_pin()* 可以为 SDA 和 SCL 信号选择不同的管脚并改变上拉配置。如果要修改已经输入的值，请使用函数*i2c_param_config()*。

注解: ESP32 的内部上拉电阻范围为几万欧姆，因此在大多数情况下，它们本身不足以用作 I2C 上拉电阻。建议用户使用阻值在 I2C 总线协议规范 规定范围内的上拉电阻。

错误处理 大多数 I2C 驱动程序的函数在成功完成时会返回 ESP_OK，或在失败时会返回特定的错误代码。实时检查返回的值并进行错误处理是一种好习惯。驱动程序也会打印日志消息，其中包含错误说明，例如检查输入配置的正确性。有关详细信息，请参考文件 driver/i2c.c 并用后缀 _ERR_STR 查找定义。

使用专用中断来捕获通信故障。例如，如果从机将数据发送回主机耗费太长时间，会触发 I2C_TIME_OUT_INT 中断。详细信息请参考中断处理。

如果出现通信失败，可以分别为发送和接收缓存区调用*i2c_reset_tx_fifo()* 和*i2c_reset_rx_fifo()* 来重置内部硬件缓存区。

删除驱动程序 如果使用*i2c_driver_install()* 建立 I2C 通信，一段时间后不再需要 I2C 通信，则可以通过调用*i2c_driver_delete()* 来移除驱动程序以释放分配的资源。

应用示例

I2C 主机和从机示例：peripherals/i2c

API 参考

Header File

- driver/include/driver/i2c.h

Functions

esp_err_t **i2c_driver_install**(*i2c_port_t i2c_num*, *i2c_mode_t mode*, size_t *slv_rx_buf_len*, size_t *slv_tx_buf_len*, int *intr_alloc_flags*)

I2C driver install.

Note Only slave mode will use this value, driver will ignore this value in master mode.

Note Only slave mode will use this value, driver will ignore this value in master mode.

Note In master mode, if the cache is likely to be disabled(such as write flash) and the slave is time-sensitive, `ESP_INTR_FLAG_IRAM` is suggested to be used. In this case, please use the memory allocated from internal RAM in i2c read and write function, because we can not access the psram(if psram is enabled) in interrupt handle function when cache is disabled.

Return

- ESP_OK Success
- ESP_ERR_INVALID_ARG Parameter error
- ESP_FAIL Driver install error

Parameters

- `i2c_num`: I2C port number
- `mode`: I2C mode(master or slave)
- `slv_rx_buf_len`: receiving buffer size for slave mode

Parameters

- `slv_tx_buf_len`: sending buffer size for slave mode

Parameters

- `intr_alloc_flags`: Flags used to allocate the interrupt. One or multiple (ORred) ESP_INTR_FLAG_* values. See esp_intr_alloc.h for more info.

esp_err_t **i2c_driver_delete**(*i2c_port_t i2c_num*)

I2C driver delete.

Note This function does not guarantee thread safety. Please make sure that no thread will continuously hold semaphores before calling the delete function.

Return

- ESP_OK Success
- ESP_ERR_INVALID_ARG Parameter error

Parameters

- `i2c_num`: I2C port number

esp_err_t **i2c_param_config**(*i2c_port_t i2c_num*, **const** *i2c_config_t* **i2c_conf*)

I2C parameter initialization.

Return

- ESP_OK Success
- ESP_ERR_INVALID_ARG Parameter error

Parameters

- `i2c_num`: I2C port number
- `i2c_conf`: pointer to I2C parameter settings

esp_err_t **i2c_reset_tx_fifo**(*i2c_port_t i2c_num*)

reset I2C tx hardware fifo

Return

- ESP_OK Success
- ESP_ERR_INVALID_ARG Parameter error

Parameters

- `i2c_num`: I2C port number

esp_err_t **i2c_reset_rx_fifo**(*i2c_port_t i2c_num*)

reset I2C rx fifo

Return

- ESP_OK Success
- ESP_ERR_INVALID_ARG Parameter error

Parameters

- `i2c_num`: I2C port number

esp_err_t **i2c_isr_register**(*i2c_port_t i2c_num*, void (**fn*)) void *
, void **arg*, int *intr_alloc_flags*, *intr_handle_t* **handle*I2C isr handler register.

Return
- ESP_OK Success
- ESP_ERR_INVALID_ARG Parameter error

Parameters
- `i2c_num`: I2C port number
- `fn`: isr handler function
- `arg`: parameter for isr handler function
- `intr_alloc_flags`: Flags used to allocate the interrupt. One or multiple (ORred) ESP_INTR_FLAG_* values. See esp_intr_alloc.h for more info.
- `handle`: handle return from esp_intr_alloc.

esp_err_t **i2c_isr_free**(*intr_handle_t handle*)
to delete and free I2C isr.

Return
- ESP_OK Success
- ESP_ERR_INVALID_ARG Parameter error

Parameters
- `handle`: handle of isr.

esp_err_t **i2c_set_pin**(*i2c_port_t i2c_num*, int *sda_io_num*, int *scl_io_num*, bool *sda_pullup_en*, bool *scl_pullup_en*, *i2c_mode_t mode*)
Configure GPIO signal for I2C sck and sda.

Return
- ESP_OK Success
- ESP_ERR_INVALID_ARG Parameter error

Parameters
- `i2c_num`: I2C port number
- `sda_io_num`: GPIO number for I2C sda signal
- `scl_io_num`: GPIO number for I2C scl signal
- `sda_pullup_en`: Whether to enable the internal pullup for sda pin
- `scl_pullup_en`: Whether to enable the internal pullup for scl pin
- `mode`: I2C mode

i2c_cmd_handle_t **i2c_cmd_link_create**(void)
Create and init I2C command link.

Note Before we build I2C command link, we need to call i2c_cmd_link_create() to create a command link. After we finish sending the commands, we need to call i2c_cmd_link_delete() to release and return the resources.

Return i2c command link handler

void **i2c_cmd_link_delete**(*i2c_cmd_handle_t cmd_handle*)
Free I2C command link.

Note Before we build I2C command link, we need to call i2c_cmd_link_create() to create a command link. After we finish sending the commands, we need to call i2c_cmd_link_delete() to release and return the resources.

Parameters
- `cmd_handle`: I2C command handle

esp_err_t **i2c_master_start**(*i2c_cmd_handle_t cmd_handle*)
Queue command for I2C master to generate a start signal.

Note Only call this function in I2C master mode Call i2c_master_cmd_begin() to send all queued commands

Return
- ESP_OK Success
- ESP_ERR_INVALID_ARG Parameter error

Parameters
- `cmd_handle`: I2C cmd link

esp_err_t **i2c_master_write_byte**(*i2c_cmd_handle_t cmd_handle*, uint8_t *data*, bool *ack_en*)

Queue command for I2C master to write one byte to I2C bus.

Note Only call this function in I2C master mode Call i2c_master_cmd_begin() to send all queued commands

Return

- ESP_OK Success
- ESP_ERR_INVALID_ARG Parameter error

Parameters

- `cmd_handle`: I2C cmd link
- `data`: I2C one byte command to write to bus
- `ack_en`: enable ack check for master

esp_err_t **i2c_master_write**(*i2c_cmd_handle_t cmd_handle*, **const** uint8_t **data*, size_t *data_len*, bool *ack_en*)

Queue command for I2C master to write buffer to I2C bus.

Note Only call this function in I2C master mode Call i2c_master_cmd_begin() to send all queued commands

Note If the psram is enabled and intr_flag is `ESP_INTR_FLAG_IRAM`, please use the memory allocated from internal RAM.

Return

- ESP_OK Success
- ESP_ERR_INVALID_ARG Parameter error

Parameters

- `cmd_handle`: I2C cmd link
- `data`: data to send

Parameters

- `data_len`: data length
- `ack_en`: enable ack check for master

esp_err_t **i2c_master_read_byte**(*i2c_cmd_handle_t cmd_handle*, uint8_t **data*, *i2c_ack_type_t ack*)

Queue command for I2C master to read one byte from I2C bus.

Note Only call this function in I2C master mode Call i2c_master_cmd_begin() to send all queued commands

Note If the psram is enabled and intr_flag is `ESP_INTR_FLAG_IRAM`, please use the memory allocated from internal RAM.

Return

- ESP_OK Success
- ESP_ERR_INVALID_ARG Parameter error

Parameters

- `cmd_handle`: I2C cmd link
- `data`: pointer accept the data byte

Parameters

- `ack`: ack value for read command

esp_err_t **i2c_master_read**(*i2c_cmd_handle_t cmd_handle*, uint8_t **data*, size_t *data_len*, *i2c_ack_type_t ack*)

Queue command for I2C master to read data from I2C bus.

Note Only call this function in I2C master mode Call i2c_master_cmd_begin() to send all queued commands

Note If the psram is enabled and intr_flag is `ESP_INTR_FLAG_IRAM`, please use the memory allocated from internal RAM.

Return

- ESP_OK Success
- ESP_ERR_INVALID_ARG Parameter error

Parameters

- `cmd_handle`: I2C cmd link
- `data`: data buffer to accept the data from bus

Parameters

- `data_len`: read data length
- `ack`: ack value for read command

esp_err_t **i2c_master_stop**(*i2c_cmd_handle_t cmd_handle*)

Queue command for I2C master to generate a stop signal.

Note Only call this function in I2C master mode Call i2c_master_cmd_begin() to send all queued commands
Return
- ESP_OK Success
- ESP_ERR_INVALID_ARG Parameter error

Parameters
- `cmd_handle`: I2C cmd link

esp_err_t **i2c_master_cmd_begin**(*i2c_port_t i2c_num*, *i2c_cmd_handle_t cmd_handle*, TickType_t *ticks_to_wait*)

I2C master send queued commands. This function will trigger sending all queued commands. The task will be blocked until all the commands have been sent out. The I2C APIs are not thread-safe, if you want to use one I2C port in different tasks, you need to take care of the multi-thread issue.

Note Only call this function in I2C master mode
Return
- ESP_OK Success
- ESP_ERR_INVALID_ARG Parameter error
- ESP_FAIL Sending command error, slave doesn't ACK the transfer.
- ESP_ERR_INVALID_STATE I2C driver not installed or not in master mode.
- ESP_ERR_TIMEOUT Operation timeout because the bus is busy.

Parameters
- `i2c_num`: I2C port number
- `cmd_handle`: I2C command handler
- `ticks_to_wait`: maximum wait ticks.

int **i2c_slave_write_buffer**(*i2c_port_t i2c_num*, **const** uint8_t **data*, int *size*, TickType_t *ticks_to_wait*)

I2C slave write data to internal ringbuffer, when tx fifo empty, isr will fill the hardware fifo from the internal ringbuffer.

Note Only call this function in I2C slave mode
Return
- ESP_FAIL(-1) Parameter error
- Others(>=0) The number of data bytes that pushed to the I2C slave buffer.

Parameters
- `i2c_num`: I2C port number
- `data`: data pointer to write into internal buffer
- `size`: data size
- `ticks_to_wait`: Maximum waiting ticks

int **i2c_slave_read_buffer**(*i2c_port_t i2c_num*, uint8_t **data*, size_t *max_size*, TickType_t *ticks_to_wait*)

I2C slave read data from internal buffer. When I2C slave receive data, isr will copy received data from hardware rx fifo to internal ringbuffer. Then users can read from internal ringbuffer.

Note Only call this function in I2C slave mode
Return
- ESP_FAIL(-1) Parameter error
- Others(>=0) The number of data bytes that read from I2C slave buffer.

Parameters
- `i2c_num`: I2C port number
- `data`: data pointer to accept data from internal buffer
- `max_size`: Maximum data size to read
- `ticks_to_wait`: Maximum waiting ticks

esp_err_t **i2c_set_period**(*i2c_port_t i2c_num*, int *high_period*, int *low_period*)

set I2C master clock period

Return
- ESP_OK Success
- ESP_ERR_INVALID_ARG Parameter error

Parameters

- `i2c_num`: I2C port number
- `high_period`: clock cycle number during SCL is high level, high_period is a 14 bit value
- `low_period`: clock cycle number during SCL is low level, low_period is a 14 bit value

esp_err_t **i2c_get_period**(*i2c_port_t i2c_num*, int **high_period*, int **low_period*)

get I2C master clock period

Return

- ESP_OK Success
- ESP_ERR_INVALID_ARG Parameter error

Parameters

- `i2c_num`: I2C port number
- `high_period`: pointer to get clock cycle number during SCL is high level, will get a 14 bit value
- `low_period`: pointer to get clock cycle number during SCL is low level, will get a 14 bit value

esp_err_t **i2c_filter_enable**(*i2c_port_t i2c_num*, uint8_t *cyc_num*)

enable hardware filter on I2C bus Sometimes the I2C bus is disturbed by high frequency noise(about 20ns), or the rising edge of the SCL clock is very slow, these may cause the master state machine broken. enable hardware filter can filter out high frequency interference and make the master more stable.

Note Enable filter will slow the SCL clock.

Return

- ESP_OK Success
- ESP_ERR_INVALID_ARG Parameter error

Parameters

- `i2c_num`: I2C port number
- `cyc_num`: the APB cycles need to be filtered(0<= cyc_num <=7). When the period of a pulse is less than cyc_num * APB_cycle, the I2C controller will ignore this pulse.

esp_err_t **i2c_filter_disable**(*i2c_port_t i2c_num*)

disable filter on I2C bus

Return

- ESP_OK Success
- ESP_ERR_INVALID_ARG Parameter error

Parameters

- `i2c_num`: I2C port number

esp_err_t **i2c_set_start_timing**(*i2c_port_t i2c_num*, int *setup_time*, int *hold_time*)

set I2C master start signal timing

Return

- ESP_OK Success
- ESP_ERR_INVALID_ARG Parameter error

Parameters

- `i2c_num`: I2C port number
- `setup_time`: clock number between the falling-edge of SDA and rising-edge of SCL for start mark, it’ s a 10-bit value.
- `hold_time`: clock num between the falling-edge of SDA and falling-edge of SCL for start mark, it’ s a 10-bit value.

esp_err_t **i2c_get_start_timing**(*i2c_port_t i2c_num*, int **setup_time*, int **hold_time*)

get I2C master start signal timing

Return

- ESP_OK Success
- ESP_ERR_INVALID_ARG Parameter error

Parameters

- `i2c_num`: I2C port number
- `setup_time`: pointer to get setup time
- `hold_time`: pointer to get hold time

esp_err_t **i2c_set_stop_timing**(*i2c_port_t i2c_num*, int *setup_time*, int *hold_time*)
set I2C master stop signal timing

Return
- ESP_OK Success
- ESP_ERR_INVALID_ARG Parameter error

Parameters
- `i2c_num`: I2C port number
- `setup_time`: clock num between the rising-edge of SCL and the rising-edge of SDA, it's a 10-bit value.
- `hold_time`: clock number after the STOP bit's rising-edge, it's a 14-bit value.

esp_err_t **i2c_get_stop_timing**(*i2c_port_t i2c_num*, int **setup_time*, int **hold_time*)
get I2C master stop signal timing

Return
- ESP_OK Success
- ESP_ERR_INVALID_ARG Parameter error

Parameters
- `i2c_num`: I2C port number
- `setup_time`: pointer to get setup time.
- `hold_time`: pointer to get hold time.

esp_err_t **i2c_set_data_timing**(*i2c_port_t i2c_num*, int *sample_time*, int *hold_time*)
set I2C data signal timing

Return
- ESP_OK Success
- ESP_ERR_INVALID_ARG Parameter error

Parameters
- `i2c_num`: I2C port number
- `sample_time`: clock number I2C used to sample data on SDA after the rising-edge of SCL, it's a 10-bit value
- `hold_time`: clock number I2C used to hold the data after the falling-edge of SCL, it's a 10-bit value

esp_err_t **i2c_get_data_timing**(*i2c_port_t i2c_num*, int **sample_time*, int **hold_time*)
get I2C data signal timing

Return
- ESP_OK Success
- ESP_ERR_INVALID_ARG Parameter error

Parameters
- `i2c_num`: I2C port number
- `sample_time`: pointer to get sample time
- `hold_time`: pointer to get hold time

esp_err_t **i2c_set_timeout**(*i2c_port_t i2c_num*, int *timeout*)
set I2C timeout value

Return
- ESP_OK Success
- ESP_ERR_INVALID_ARG Parameter error

Parameters
- `i2c_num`: I2C port number
- `timeout`: timeout value for I2C bus (unit: APB 80Mhz clock cycle)

esp_err_t **i2c_get_timeout**(*i2c_port_t i2c_num*, int **timeout*)
get I2C timeout value

Return
- ESP_OK Success
- ESP_ERR_INVALID_ARG Parameter error

Parameters

- `i2c_num`: I2C port number
- `timeout`: pointer to get timeout value

esp_err_t **i2c_set_data_mode**(*i2c_port_t i2c_num*, *i2c_trans_mode_t tx_trans_mode*, *i2c_trans_mode_t rx_trans_mode*)

set I2C data transfer mode

Return

- ESP_OK Success
- ESP_ERR_INVALID_ARG Parameter error

Parameters

- `i2c_num`: I2C port number
- `tx_trans_mode`: I2C sending data mode
- `rx_trans_mode`: I2C receving data mode

esp_err_t **i2c_get_data_mode**(*i2c_port_t i2c_num*, *i2c_trans_mode_t *tx_trans_mode*, *i2c_trans_mode_t *rx_trans_mode*)

get I2C data transfer mode

Return

- ESP_OK Success
- ESP_ERR_INVALID_ARG Parameter error

Parameters

- `i2c_num`: I2C port number
- `tx_trans_mode`: pointer to get I2C sending data mode
- `rx_trans_mode`: pointer to get I2C receiving data mode

Macros

I2C_APB_CLK_FREQ

I2C source clock is APB clock, 80MHz

I2C_NUM_0

I2C port 0

I2C_NUM_1

I2C port 1

I2C_NUM_MAX

I2C port max

Type Definitions

typedef void ***i2c_cmd_handle_t**

I2C command handle

Header File

- hal/include/hal/i2c_types.h

Structures

struct i2c_config_t

I2C initialization parameters.

Public Members

i2c_mode_t **mode**

I2C mode

int **sda_io_num**

GPIO number for I2C sda signal

int **scl_io_num**
GPIO number for I2C scl signal

bool **sda_pullup_en**
Internal GPIO pull mode for I2C sda signal

bool **scl_pullup_en**
Internal GPIO pull mode for I2C scl signal

uint32_t **clk_speed**
I2C clock frequency for master mode, (no higher than 1MHz for now)

struct *i2c_config_t*::**[anonymous]**::**[anonymous] master**
I2C master config

uint8_t **addr_10bit_en**
I2C 10bit address mode enable for slave mode

uint16_t **slave_addr**
I2C address for slave mode

struct *i2c_config_t*::**[anonymous]**::**[anonymous] slave**
I2C slave config

uint32_t **clk_flags**
Bitwise of `I2C_SCLK_SRC_FLAG_**FOR_DFS**` for clk source choice

Macros

I2C_SCLK_SRC_FLAG_FOR_NOMAL
Any one clock source that is available for the specified frequency may be choosen

I2C_SCLK_SRC_FLAG_AWARE_DFS
For REF tick clock, it won't change with APB.

I2C_SCLK_SRC_FLAG_LIGHT_SLEEP
For light sleep mode.

I2C_CLK_FREQ_MAX
Use the highest speed that is available for the clock source picked by clk_flags.

Type Definitions

typedef int **i2c_port_t**
I2C port number, can be I2C_NUM_0 ~ (I2C_NUM_MAX-1).

Enumerations

enum i2c_mode_t
Values:

I2C_MODE_SLAVE = 0
I2C slave mode

I2C_MODE_MASTER
I2C master mode

I2C_MODE_MAX

enum i2c_rw_t
Values:

I2C_MASTER_WRITE = 0
I2C write data

I2C_MASTER_READ
I2C read data

enum i2c_trans_mode_t

Values:

I2C_DATA_MODE_MSB_FIRST = 0
I2C data msb first

I2C_DATA_MODE_LSB_FIRST = 1
I2C data lsb first

I2C_DATA_MODE_MAX

enum i2c_addr_mode_t

Values:

I2C_ADDR_BIT_7 = 0
I2C 7bit address for slave mode

I2C_ADDR_BIT_10
I2C 10bit address for slave mode

I2C_ADDR_BIT_MAX

enum i2c_ack_type_t

Values:

I2C_MASTER_ACK = 0x0
I2C ack for each byte read

I2C_MASTER_NACK = 0x1
I2C nack for each byte read

I2C_MASTER_LAST_NACK = 0x2
I2C nack for the last byte

I2C_MASTER_ACK_MAX

enum i2c_sclk_t

I2C clock source, sorting from smallest to largest, place them in order. This can be expanded in the future use.

Values:

I2C_SCLK_DEFAULT = 0
I2C source clock not selected

I2C_SCLK_APB
I2C source clock from APB, 80M

I2C_SCLK_MAX

enum i2c_opmode_t

Values:

I2C_CMD_RESTART = 0
I2C restart command

I2C_CMD_WRITE
I2C write command

I2C_CMD_READ
I2C read command

I2C_CMD_STOP
I2C stop command

I2C_CMD_END
I2C end command

2.3.6 I2S

Overview

I2S (Inter-IC Sound) is a serial, synchronous communication protocol that is usually used for transmitting audio data between two digital audio devices.

ESP32 contains two I2S peripherals. These peripherals can be configured to input and output sample data via the I2S driver.

An I2S bus consists of the following lines:

- Bit clock line
- Channel select line
- Serial data line

Each I2S controller has the following features that can be configured using the I2S driver:

- Operation as system master or slave
- Capable of acting as transmitter or receiver
- Dedicated DMA controller that allows for streaming sample data without requiring the CPU to copy each data sample

Each controller can operate in half-duplex communication mode. Thus, the two controllers can be combined to establish full-duplex communication.

I2S0 output can be routed directly to the digital-to-analog converter's (DAC) output channels (GPIO 25 & GPIO 26) to produce direct analog output without involving any external I2S codecs. I2S0 can also be used for transmitting PDM (Pulse-density modulation) signals.

The I2S peripherals also support LCD mode for communicating data over a parallel bus, as used by some LCD displays and camera modules. LCD mode has the following operational modes:

- LCD master transmitting mode
- Camera slave receiving mode
- ADC/DAC mode

For more information, see *ESP32 Technical Reference Manual* > *I2S Controller (I2S)* > LCD Mode [PDF].

注解： For high accuracy clock applications, use the APLL_CLK clock source, which has the frequency range of 16 ~ 128 MHz. You can enable the APLL_CLK clock source by setting *i2s_config_t::use_apll* to `TRUE`.

If *i2s_config_t::use_apll* = `TRUE` and *i2s_config_t::fixed_mclk* > `0`, then the master clock output frequency for I2S will be equal to the value of *i2s_config_t::fixed_mclk*, which means that the mclk frequency is provided by the user, instead of being calculated by the driver.

The clock rate of the word select line, which is called audio left-right clock rate (LRCK) here, is always the divisor of the master clock output frequency and for which the following is always true: 0 < MCLK/LRCK/channels/bits_per_sample < 64.

Functional Overview

Installing the Driver Install the I2S driver by calling the function *i2s_driver_install()* and passing the following arguments:

- Port number
- The structure *i2s_config_t* with defined communication parameters
- Event queue size and handle

Configuration example:

```
static const int i2s_num = 0; // i2s port number

static const i2s_config_t i2s_config = {
    .mode = I2S_MODE_MASTER | I2S_MODE_TX,
    .sample_rate = 44100,
    .bits_per_sample = I2S_BITS_PER_SAMPLE_16BIT,
    .channel_format = I2S_CHANNEL_FMT_RIGHT_LEFT,
    .communication_format = I2S_COMM_FORMAT_STAND_I2S,
    .intr_alloc_flags = 0, // default interrupt priority
    .dma_buf_count = 8,
    .dma_buf_len = 64,
    .use_apll = false
};

i2s_driver_install(I2S_NUM, &i2s_config, 0, NULL);
```

Setting Communication Pins Once the driver is installed, configure physical GPIO pins to which signals will be routed. For this, call the function *i2s_set_pin()* and pass the following arguments to it:

- Port number
- The structure *i2s_pin_config_t* defining the GPIO pin numbers to which the driver should route the BCK, WS, DATA out, and DATA in signals. If you want to keep a currently allocated pin number for a specific signal, or if this signal is unused, then pass the macro *I2S_PIN_NO_CHANGE*. See the example below.

```
static const i2s_pin_config_t pin_config = {
    .bck_io_num = 26,
    .ws_io_num = 25,
    .data_out_num = 22,
    .data_in_num = I2S_PIN_NO_CHANGE
};

i2s_set_pin(i2s_num, &pin_config);
```

Running I2S Communication To perform a transmission:

- Prepare the data for sending
- Call the function *i2s_write()* and pass the data buffer address and data length to it

The function will write the data to the I2S DMA Tx buffer, and then the data will be transmitted automatically.

```
i2s_write(I2S_NUM, samples_data, ((bits+8)/16)*SAMPLE_PER_CYCLE*4, &i2s_bytes_
↪write, 100);
```

To retrieve received data, use the function *i2s_read()*. It will retrieve the data from the I2S DMA Rx buffer, once the data is received by the I2S controller.

You can temporarily stop the I2S driver by calling the function *i2s_stop()*, which will disable the I2S Tx/Rx units until the function *i2s_start()* is called. If the function *i2s_driver_install()* is used, the driver will start up automatically eliminating the need to call *i2s_start()*.

Deleting the Driver If the established communication is no longer required, the driver can be removed to free allocated resources by calling *i2s_driver_uninstall()*.

Application Example

A code example for the I2S driver can be found in the directory peripherals/i2s.

In addition, there are two short configuration examples for the I2S driver.

I2S configuration

```
#include "driver/i2s.h"
#include "freertos/queue.h"

static const int i2s_num = 0; // i2s port number

static const i2s_config_t i2s_config = {
    .mode = I2S_MODE_MASTER | I2S_MODE_TX,
    .sample_rate = 44100,
    .bits_per_sample = I2S_BITS_PER_SAMPLE_16BIT,
    .channel_format = I2S_CHANNEL_FMT_RIGHT_LEFT,
    .communication_format = I2S_COMM_FORMAT_STAND_I2S,
    .intr_alloc_flags = 0, // default interrupt priority
    .dma_buf_count = 8,
    .dma_buf_len = 64,
    .use_apll = false
};

static const i2s_pin_config_t pin_config = {
    .bck_io_num = 26,
    .ws_io_num = 25,
    .data_out_num = 22,
    .data_in_num = I2S_PIN_NO_CHANGE
};

...

    i2s_driver_install(i2s_num, &i2s_config, 0, NULL);   //install and start i2s␣
↪driver

    i2s_set_pin(i2s_num, &pin_config);

    i2s_set_sample_rates(i2s_num, 22050); //set sample rates

    i2s_driver_uninstall(i2s_num); //stop & destroy i2s driver
```

Configuring I2S to use internal DAC for analog output

```
#include "driver/i2s.h"
#include "freertos/queue.h"

static const int i2s_num = 0; // i2s port number

static const i2s_config_t i2s_config = {
    .mode = I2S_MODE_MASTER | I2S_MODE_TX | I2S_MODE_DAC_BUILT_IN,
    .sample_rate = 44100,
    .bits_per_sample = I2S_BITS_PER_SAMPLE_16BIT, /* the DAC module will only take␣
↪the 8bits from MSB */
    .channel_format = I2S_CHANNEL_FMT_RIGHT_LEFT,
    .intr_alloc_flags = 0, // default interrupt priority
    .dma_buf_count = 8,
    .dma_buf_len = 64,
    .use_apll = false
};

...

    i2s_driver_install(i2s_num, &i2s_config, 0, NULL);   //install and start i2s␣
↪driver

    i2s_set_pin(i2s_num, NULL); //for internal DAC, this will enable both of the␣
↪internal channels
```

(下页继续)

(续上页)

```
    //You can call i2s_set_dac_mode to set built-in DAC output mode.
    //i2s_set_dac_mode(I2S_DAC_CHANNEL_BOTH_EN);

    i2s_set_sample_rates(i2s_num, 22050); //set sample rates

    i2s_driver_uninstall(i2s_num); //stop & destroy i2s driver
```

API Reference

Header File

- driver/include/driver/i2s.h

Functions

esp_err_t **i2s_set_pin**(*i2s_port_t i2s_num*, **const** *i2s_pin_config_t *pin*)

Set I2S pin number.

Inside the pin configuration structure, set I2S_PIN_NO_CHANGE for any pin where the current configuration should not be changed.

Note The I2S peripheral output signals can be connected to multiple GPIO pads. However, the I2S peripheral input signal can only be connected to one GPIO pad.

Parameters

- `i2s_num`: I2S_NUM_0 or I2S_NUM_1
- `pin`: I2S Pin structure, or NULL to set 2-channel 8-bit internal DAC pin configuration (GPIO25 & GPIO26)

Note if *pin is set as NULL, this function will initialize both of the built-in DAC channels by default. if you don't want this to happen and you want to initialize only one of the DAC channels, you can call i2s_set_dac_mode instead.

Return

- ESP_OK Success
- ESP_ERR_INVALID_ARG Parameter error
- ESP_FAIL IO error

esp_err_t **i2s_set_pdm_rx_down_sample**(*i2s_port_t i2s_num*, *i2s_pdm_dsr_t dsr*)

Set PDM mode down-sample rate In PDM RX mode, there would be 2 rounds of downsample process in hardware. In the first downsample process, the sampling number can be 16 or 8. In the second downsample process, the sampling number is fixed as 8. So the clock frequency in PDM RX mode would be (fpcm * 64) or (fpcm * 128) accordingly.

Note After calling this function, it would call i2s_set_clk inside to update the clock frequency. Please call this function after I2S driver has been initialized.

Return

- ESP_OK Success
- ESP_ERR_INVALID_ARG Parameter error
- ESP_ERR_NO_MEM Out of memory

Parameters

- `i2s_num`: I2S_NUM_0, I2S_NUM_1
- `dsr`: i2s RX down sample rate for PDM mode.

esp_err_t **i2s_set_dac_mode**(*i2s_dac_mode_t dac_mode*)

Set I2S dac mode, I2S built-in DAC is disabled by default.

Note Built-in DAC functions are only supported on I2S0 for current ESP32 chip. If either of the built-in DAC channel are enabled, the other one can not be used as RTC DAC function at the same time.

Return

- ESP_OK Success
- ESP_ERR_INVALID_ARG Parameter error

Parameters

- `dac_mode`: DAC mode configurations - see i2s_dac_mode_t

esp_err_t **i2s_driver_install**(*i2s_port_t i2s_num*, **const** *i2s_config_t* **i2s_config*, int *queue_size*, void **i2s_queue*)

Install and start I2S driver.

This function must be called before any I2S driver read/write operations.

Parameters

- `i2s_num`: I2S_NUM_0, I2S_NUM_1
- `i2s_config`: I2S configurations - see *i2s_config_t* struct
- `queue_size`: I2S event queue size/depth.
- `i2s_queue`: I2S event queue handle, if set NULL, driver will not use an event queue.

Return

- ESP_OK Success
- ESP_ERR_INVALID_ARG Parameter error
- ESP_ERR_NO_MEM Out of memory

esp_err_t **i2s_driver_uninstall**(*i2s_port_t i2s_num*)

Uninstall I2S driver.

Return

- ESP_OK Success
- ESP_ERR_INVALID_ARG Parameter error

Parameters

- `i2s_num`: I2S_NUM_0, I2S_NUM_1

esp_err_t **i2s_write**(*i2s_port_t i2s_num*, **const** void **src*, size_t *size*, size_t **bytes_written*, TickType_t *ticks_to_wait*)

Write data to I2S DMA transmit buffer.

Return

- ESP_OK Success
- ESP_ERR_INVALID_ARG Parameter error

Parameters

- `i2s_num`: I2S_NUM_0, I2S_NUM_1
- `src`: Source address to write from
- `size`: Size of data in bytes
- `[out] bytes_written`: Number of bytes written, if timeout, the result will be less than the size passed in.
- `ticks_to_wait`: TX buffer wait timeout in RTOS ticks. If this many ticks pass without space becoming available in the DMA transmit buffer, then the function will return (note that if the data is written to the DMA buffer in pieces, the overall operation may still take longer than this timeout.) Pass portMAX_DELAY for no timeout.

esp_err_t **i2s_write_expand**(*i2s_port_t i2s_num*, **const** void **src*, size_t *size*, size_t *src_bits*, size_t *aim_bits*, size_t **bytes_written*, TickType_t *ticks_to_wait*)

Write data to I2S DMA transmit buffer while expanding the number of bits per sample. For example, expanding 16-bit PCM to 32-bit PCM.

Format of the data in source buffer is determined by the I2S configuration (see *i2s_config_t*).

Parameters

- `i2s_num`: I2S_NUM_0, I2S_NUM_1
- `src`: Source address to write from
- `size`: Size of data in bytes
- `src_bits`: Source audio bit
- `aim_bits`: Bit wanted, no more than 32, and must be greater than src_bits
- `[out] bytes_written`: Number of bytes written, if timeout, the result will be less than the size passed in.
- `ticks_to_wait`: TX buffer wait timeout in RTOS ticks. If this many ticks pass without space becoming available in the DMA transmit buffer, then the function will return (note that if the data

is written to the DMA buffer in pieces, the overall operation may still take longer than this timeout.) Pass portMAX_DELAY for no timeout.

Return
- ESP_OK Success
- ESP_ERR_INVALID_ARG Parameter error

esp_err_t **i2s_read**(*i2s_port_t i2s_num*, void **dest*, size_t *size*, size_t **bytes_read*, TickType_t *ticks_to_wait*)

Read data from I2S DMA receive buffer.

Note If the built-in ADC mode is enabled, we should call i2s_adc_enable and i2s_adc_disable around the whole reading process, to prevent the data getting corrupted.

Return
- ESP_OK Success
- ESP_ERR_INVALID_ARG Parameter error

Parameters
- `i2s_num`: I2S_NUM_0, I2S_NUM_1
- `dest`: Destination address to read into
- `size`: Size of data in bytes
- `[out] bytes_read`: Number of bytes read, if timeout, bytes read will be less than the size passed in.
- `ticks_to_wait`: RX buffer wait timeout in RTOS ticks. If this many ticks pass without bytes becoming available in the DMA receive buffer, then the function will return (note that if data is read from the DMA buffer in pieces, the overall operation may still take longer than this timeout.) Pass portMAX_DELAY for no timeout.

esp_err_t **i2s_set_sample_rates**(*i2s_port_t i2s_num*, uint32_t *rate*)

Set sample rate used for I2S RX and TX.

The bit clock rate is determined by the sample rate and *i2s_config_t* configuration parameters (number of channels, bits_per_sample).

```
bit_clock = rate * (number of channels) * bits_per_sample
```

Return
- ESP_OK Success
- ESP_ERR_INVALID_ARG Parameter error
- ESP_ERR_NO_MEM Out of memory

Parameters
- `i2s_num`: I2S_NUM_0, I2S_NUM_1
- `rate`: I2S sample rate (ex: 8000, 44100···)

esp_err_t **i2s_stop**(*i2s_port_t i2s_num*)

Stop I2S driver.

There is no need to call i2s_stop() before calling i2s_driver_uninstall().

Disables I2S TX/RX, until i2s_start() is called.

Return
- ESP_OK Success
- ESP_ERR_INVALID_ARG Parameter error

Parameters
- `i2s_num`: I2S_NUM_0, I2S_NUM_1

esp_err_t **i2s_start**(*i2s_port_t i2s_num*)

Start I2S driver.

It is not necessary to call this function after i2s_driver_install() (it is started automatically), however it is necessary to call it after i2s_stop().

Return
- ESP_OK Success
- ESP_ERR_INVALID_ARG Parameter error

Parameters
- `i2s_num`: I2S_NUM_0, I2S_NUM_1

esp_err_t **i2s_zero_dma_buffer** (*i2s_port_t i2s_num*)
Zero the contents of the TX DMA buffer.

Pushes zero-byte samples into the TX DMA buffer, until it is full.

Return
- ESP_OK Success
- ESP_ERR_INVALID_ARG Parameter error

Parameters
- `i2s_num`: I2S_NUM_0, I2S_NUM_1

esp_err_t **i2s_set_clk** (*i2s_port_t i2s_num*, uint32_t *rate*, *i2s_bits_per_sample_t bits*, *i2s_channel_t ch*)
Set clock & bit width used for I2S RX and TX.

Similar to i2s_set_sample_rates(), but also sets bit width.

Return
- ESP_OK Success
- ESP_ERR_INVALID_ARG Parameter error
- ESP_ERR_NO_MEM Out of memory

Parameters
- `i2s_num`: I2S_NUM_0, I2S_NUM_1
- `rate`: I2S sample rate (ex: 8000, 44100···)
- `bits`: I2S bit width (I2S_BITS_PER_SAMPLE_16BIT, I2S_BITS_PER_SAMPLE_24BIT, I2S_BITS_PER_SAMPLE_32BIT)
- `ch`: I2S channel, (I2S_CHANNEL_MONO, I2S_CHANNEL_STEREO)

float **i2s_get_clk** (*i2s_port_t i2s_num*)
get clock set on particular port number.

Return
- actual clock set by i2s driver

Parameters
- `i2s_num`: I2S_NUM_0, I2S_NUM_1

esp_err_t **i2s_set_adc_mode** (*adc_unit_t adc_unit*, *adc1_channel_t adc_channel*)
Set built-in ADC mode for I2S DMA, this function will initialize ADC pad, and set ADC parameters.

Note In this mode, the ADC maximum sampling rate is 150KHz. Set the sampling rate through *i2s_config_t*.

Return
- ESP_OK Success
- ESP_ERR_INVALID_ARG Parameter error

Parameters
- `adc_unit`: SAR ADC unit index
- `adc_channel`: ADC channel index

esp_err_t **i2s_adc_enable** (*i2s_port_t i2s_num*)
Start to use I2S built-in ADC mode.

Note This function would acquire the lock of ADC to prevent the data getting corrupted during the I2S peripheral is being used to do fully continuous ADC sampling.

Return
- ESP_OK Success
- ESP_ERR_INVALID_ARG Parameter error
- ESP_ERR_INVALID_STATE Driver state error

Parameters
- `i2s_num`: i2s port index

esp_err_t **i2s_adc_disable** (*i2s_port_t i2s_num*)
Stop to use I2S built-in ADC mode.

Note This function would release the lock of ADC so that other tasks can use ADC.

Return

- ESP_OK Success
- ESP_ERR_INVALID_ARG Parameter error
- ESP_ERR_INVALID_STATE Driver state error

Parameters

- `i2s_num`: i2s port index

Macros

I2S_PIN_NO_CHANGE

Use in *i2s_pin_config_t* for pins which should not be changed

Type Definitions

typedef *intr_handle_t* **i2s_isr_handle_t**

Header File

- hal/include/hal/i2s_types.h

Structures

struct i2s_config_t

I2S configuration parameters for i2s_param_config function.

Public Members

i2s_mode_t **mode**

I2S work mode

int **sample_rate**

I2S sample rate

i2s_bits_per_sample_t **bits_per_sample**

I2S bits per sample

i2s_channel_fmt_t **channel_format**

I2S channel format

i2s_comm_format_t **communication_format**

I2S communication format

int **intr_alloc_flags**

Flags used to allocate the interrupt. One or multiple (ORred) ESP_INTR_FLAG_* values. See esp_intr_alloc.h for more info

int **dma_buf_count**

I2S DMA Buffer Count

int **dma_buf_len**

I2S DMA Buffer Length

bool **use_apll**

I2S using APLL as main I2S clock, enable it to get accurate clock

bool **tx_desc_auto_clear**

I2S auto clear tx descriptor if there is underflow condition (helps in avoiding noise in case of data unavailability)

int **fixed_mclk**

I2S using fixed MCLK output. If use_apll = true and fixed_mclk > 0, then the clock output for i2s is fixed and equal to the fixed_mclk value.

struct i2s_event_t
Event structure used in I2S event queue.

Public Members

i2s_event_type_t **type**
I2S event type

size_t **size**
I2S data size for I2S_DATA event

struct i2s_pin_config_t
I2S pin number for i2s_set_pin.

Public Members

int **bck_io_num**
BCK in out pin

int **ws_io_num**
WS in out pin

int **data_out_num**
DATA out pin

int **data_in_num**
DATA in pin

Enumerations

enum i2s_port_t
I2S port number, the max port number is (I2S_NUM_MAX -1).

Values:

I2S_NUM_0 = 0
I2S port 0

I2S_NUM_1 = 1
I2S port 1

I2S_NUM_MAX
I2S port max

enum i2s_bits_per_sample_t
I2S bit width per sample.

Values:

I2S_BITS_PER_SAMPLE_8BIT = 8
I2S bits per sample: 8-bits

I2S_BITS_PER_SAMPLE_16BIT = 16
I2S bits per sample: 16-bits

I2S_BITS_PER_SAMPLE_24BIT = 24
I2S bits per sample: 24-bits

I2S_BITS_PER_SAMPLE_32BIT = 32
I2S bits per sample: 32-bits

enum i2s_channel_t
I2S channel.

Values:

I2S_CHANNEL_MONO = 1
I2S 1 channel (mono)

I2S_CHANNEL_STEREO = 2
I2S 2 channel (stereo)

enum i2s_comm_format_t
I2S communication standard format.

Values:

I2S_COMM_FORMAT_STAND_I2S = 0X01
I2S communication I2S Philips standard, data launch at second BCK

I2S_COMM_FORMAT_STAND_MSB = 0X02
I2S communication MSB alignment standard, data launch at first BCK

I2S_COMM_FORMAT_STAND_PCM_SHORT = 0x04
PCM Short standard, also known as DSP mode. The period of synchronization signal (WS) is 1 bck cycle.

I2S_COMM_FORMAT_STAND_PCM_LONG = 0x0C
PCM Long standard. The period of synchronization signal (WS) is channel_bit*bck cycles.

I2S_COMM_FORMAT_STAND_MAX
standard max

I2S_COMM_FORMAT_I2S = 0x01
I2S communication format I2S, correspond to `I2S_COMM_FORMAT_STAND_I2S`

I2S_COMM_FORMAT_I2S_MSB = 0x01
I2S format MSB, (I2S_COMM_FORMAT_I2S |I2S_COMM_FORMAT_I2S_MSB) correspond to `I2S_COMM_FORMAT_STAND_I2S`

I2S_COMM_FORMAT_I2S_LSB = 0x02
I2S format LSB, (I2S_COMM_FORMAT_I2S |I2S_COMM_FORMAT_I2S_LSB) correspond to `I2S_COMM_FORMAT_STAND_MSB`

I2S_COMM_FORMAT_PCM = 0x04
I2S communication format PCM, correspond to `I2S_COMM_FORMAT_STAND_PCM_SHORT`

I2S_COMM_FORMAT_PCM_SHORT = 0x04
PCM Short, (I2S_COMM_FORMAT_PCM | I2S_COMM_FORMAT_PCM_SHORT) correspond to `I2S_COMM_FORMAT_STAND_PCM_SHORT`

I2S_COMM_FORMAT_PCM_LONG = 0x08
PCM Long, (I2S_COMM_FORMAT_PCM | I2S_COMM_FORMAT_PCM_LONG) correspond to `I2S_COMM_FORMAT_STAND_PCM_LONG`

enum i2s_channel_fmt_t
I2S channel format type.

Values:

I2S_CHANNEL_FMT_RIGHT_LEFT = 0x00

I2S_CHANNEL_FMT_ALL_RIGHT

I2S_CHANNEL_FMT_ALL_LEFT

I2S_CHANNEL_FMT_ONLY_RIGHT

I2S_CHANNEL_FMT_ONLY_LEFT

enum i2s_mode_t
I2S Mode, defaut is I2S_MODE_MASTER | I2S_MODE_TX.

Note PDM and built-in DAC functions are only supported on I2S0 for current ESP32 chip.

Values:

I2S_MODE_MASTER = 1
Master mode

I2S_MODE_SLAVE = 2
Slave mode

I2S_MODE_TX = 4
TX mode

I2S_MODE_RX = 8
RX mode

I2S_MODE_DAC_BUILT_IN = 16
Output I2S data to built-in DAC, no matter the data format is 16bit or 32 bit, the DAC module will only take the 8bits from MSB

I2S_MODE_ADC_BUILT_IN = 32
Input I2S data from built-in ADC, each data can be 12-bit width at most

I2S_MODE_PDM = 64
PDM mode

enum i2s_clock_src_t
I2S source clock.

Values:

I2S_CLK_D2CLK = 0
Clock from PLL_D2_CLK(160M)

I2S_CLK_APLL
Clock from APLL

enum i2s_event_type_t
I2S event types.

Values:

I2S_EVENT_DMA_ERROR

I2S_EVENT_TX_DONE
I2S DMA finish sent 1 buffer

I2S_EVENT_RX_DONE
I2S DMA finish received 1 buffer

I2S_EVENT_MAX
I2S event max index

enum i2s_dac_mode_t
I2S DAC mode for i2s_set_dac_mode.

Note PDM and built-in DAC functions are only supported on I2S0 for current ESP32 chip.

Values:

I2S_DAC_CHANNEL_DISABLE = 0
Disable I2S built-in DAC signals

I2S_DAC_CHANNEL_RIGHT_EN = 1
Enable I2S built-in DAC right channel, maps to DAC channel 1 on GPIO25

I2S_DAC_CHANNEL_LEFT_EN = 2
Enable I2S built-in DAC left channel, maps to DAC channel 2 on GPIO26

I2S_DAC_CHANNEL_BOTH_EN = 0x3
Enable both of the I2S built-in DAC channels.

I2S_DAC_CHANNEL_MAX = 0x4
I2S built-in DAC mode max index

enum i2s_pdm_dsr_t
I2S PDM RX downsample mode.

Values:

I2S_PDM_DSR_8S = 0
downsampling number is 8 for PDM RX mode

I2S_PDM_DSR_16S
downsampling number is 16 for PDM RX mode

I2S_PDM_DSR_MAX

enum pdm_pcm_conv_t
PDM PCM convter enable/disable.

Values:

PDM_PCM_CONV_ENABLE
Enable PDM PCM convert

PDM_PCM_CONV_DISABLE
Disable PDM PCM convert

2.3.7 LED PWM 控制器

概述

LED 控制器 (LEDC) 主要用于控制 LED，也可产生 PWM 信号用于其他设备的控制。该控制器有 16 路通道，可以产生独立的波形来驱动 RGB LED 等设备。

LEDC 通道共有两组，分别为 8 路高速通道和 8 路低速通道。高速通道模式在硬件中实现，可以自动且无干扰地改变 PWM 占空比。低速通道模式下，PWM 占空比需要由软件中的驱动器改变。每组通道都可以使用不同的时钟源。

LED PWM 控制器可在无需 CPU 干预的情况下自动改变占空比，实现亮度和颜色渐变。

功能概览

设置 LEDC 通道在*高速模式或低速模式* 下运行，需要进行如下配置：

1. *定时器配置* 指定 PWM 信号的频率和占空比分辨率。
2. *通道配置* 绑定定时器和输出 PWM 信号的 GPIO。
3. *改变 PWM 信号* 输出 PWM 信号来驱动 LED。可通过软件控制或使用硬件渐变功能来改变 LED 的亮度。

另一个可选步骤是可以在渐变终端设置一个中断。

定时器配置 要设置定时器，可调用函数*ledc_timer_config()*，并将包括如下配置参数的数据结构*ledc_timer_config_t* 传递给该函数：

- 速度模式*ledc_mode_t*
- 定时器索引*ledc_timer_t*
- PWM 信号频率
- PWM 占空比分辨率

频率和占空比分辨率相互关联。PWM 频率越高，占空比分辨率越低，反之亦然。如果 API 不是用来改变 LED 亮度，而是用于其它目的，这种相互关系可能会很重要。更多信息详见*频率和占空比分辨率支持范围* 一节。

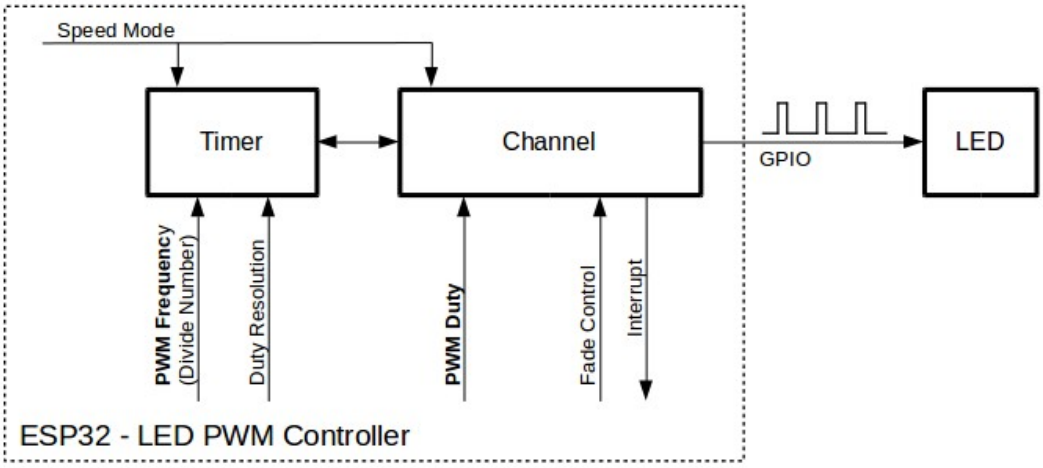

图 9: 配置 LED PWM 控制器的关键 API

通道配置 定时器设置好后，请配置所需的通道（*ledc_channel_t* 之一）。配置通道需调用函数*ledc_channel_config()*。

通道的配置与定时器设置类似，需向通道配置函数传递包括通道配置参数的结构*ledc_channel_config_t* 。

此时，通道会按照*ledc_channel_config_t* 的配置，在绑定的 GPIO 上输出具有指定频率和占空比的 PWM 信号。在通道工作过程中，可以随时通过调用函数*ledc_stop()* 将其暂停。

改变 PWM 信号 通道开始运行、生成具有恒定占空比和频率的 PWM 信号之后，有几种方式可以改变该信号。驱动 LED 时，主要通过改变占空比来变化光线亮度。

以下两节介绍了如何使用软件和硬件改变占空比。如有需要，PWM 信号的频率也可更改，详见*改变 PWM 频率* 一节。

使用软件改变 PWM 占空比 调用函数*ledc_set_duty()* 可以设置新的占空比。之后，调用函数*ledc_update_duty()* 使新配置生效。要查看当前设置的占空比，可使用 _get_ 函数*ledc_get_duty()*。

另外一种设置占空比和其他通道参数的方式是调用*通道配置* 一节提到的函数*ledc_channel_config()*。

传递给函数的占空比数值范围取决于选定的 `duty_resolution`，应为 `0` 至 `(2 ** duty_resolution) - 1`。例如，如选定的占空比分辨率为 10，则占空比的数值范围为 0 至 1023。此时分辨率为 ~0.1%。

使用硬件渐变改变 PWM 占空比 LED PWM 控制器硬件可逐渐改变占空比的数值。要使用此功能，需用函数*ledc_fade_func_install()* 使能渐变，之后用下列可用渐变函数之一配置：

- *ledc_set_fade_with_time()*
- *ledc_set_fade_with_step()*
- *ledc_set_fade()*

最后用*ledc_fade_start()* 开启渐变。

如不需要渐变和渐变中断，可用函数*ledc_fade_func_uninstall()* 关闭。

改变 PWM 频率 LED PWM 控制器 API 有多种方式即时改变 PWM 频率：

- 通过调用函数*ledc_set_freq()* 设置频率。可用函数*ledc_get_freq()* 查看当前频率。
- 通过调用函数*ledc_bind_channel_timer()* 改变频率和占空比分辨率，将其他定时器与通道相连。
- 通过调用函数*ledc_channel_config()* 改变通道的定时器。

控制 PWM 的更多方式 要改变 PWM 设置，可使用低电平定时器的特定功能：

- *ledc_timer_set()*
- *ledc_timer_rst()*
- *ledc_timer_pause()*
- *ledc_timer_resume()*

前两个功能可通过函数*ledc_channel_config()* 在后台运行，在定时器配置后启动。

使用中断 配置 LED PWM 控制器通道时，可在*ledc_channel_config_t* 中选取参数*ledc_intr_type_t*，在渐变完成时触发中断。

要注册处理程序来处理中断，可调用函数*ledc_isr_register()*。

LED PWM 控制器高速和低速模式

高速模式的优点是可平稳地改变定时器设置。也就是说，高速模式下如定时器设置改变，此变更会自动应用于定时器的下一次溢出中断。而更新低速定时器时，设置变更应由软件显式触发。LED PWM 驱动的设置将在硬件层面被修改，比如在调用函数*ledc_timer_config()* 或*ledc_timer_set()* 时。

更多关于速度模式的详细信息请参阅 *ESP32 技术参考手册* > *LED PWM 控制器 (LEDC)* [PDF]。注意，该手册中提到的支持 SLOW_CLOCK 暂不适用于 LED PWM 驱动。

频率和占空比分辨率支持范围

LED PWM 控制器主要用于驱动 LED。该控制器 PWM 占空比设置的分辨率范围较广。比如，PWM 频率为 5 kHz 时，占空比分辨率最大可为 13 位。这意味着占空比可为 0 至 100% 之间的任意值，分辨率为 ~0.012%（2 ** 13 = 8192 LED 亮度的离散电平）。然而，这些参数取决于为 LED PWM 控制器定时器计时的时钟信号，LED PWM 控制器为通道提供时钟（具体可参考定时器配置 和 *ESP32 技术参考手册* > *LED PWM 计时器 (LEDC)* [PDF]）。

LED PWM 控制器可用于生成频率较高的信号，足以为数码相机模组等其他设备提供时钟。此时，最大频率可为 40 MHz，占空比分辨率为 1 位。也就是说，占空比固定为 50%，无法调整。

LED PWM 控制器 API 会在设定的频率和占空比分辨率超过 LED PWM 控制器硬件范围时报错。例如，试图将频率设置为 20 MHz、占空比分辨率设置为 3 位时，串行端口监视器上会报告如下错误：

```
E (196) ledc: requested frequency and duty resolution cannot be achieved, try␣
↪reducing freq_hz or duty_resolution. div_param=128
```

此时，占空比分辨率或频率必须降低。比如，将占空比分辨率设置为 2 会解决这一问题，让占空比设置为 25% 的倍数，即 25%、50% 或 75%。

如设置的频率和占空比分辨率低于所支持的最低值，LED PWM 驱动器也会反映并报告，如：

```
E (196) ledc: requested frequency and duty resolution cannot be achieved, try␣
↪increasing freq_hz or duty_resolution. div_param=128000000
```

占空比分辨率通常用*ledc_timer_bit_t* 设置，范围是 10 至 15 位。如需较低的占空比分辨率（上至 10，下至 1），可直接输入相应数值。

应用实例

LED PWM 改变占空比和渐变控制的实例请参照 peripherals/ledc。

API 参考

Header File

- driver/include/driver/ledc.h

Functions

esp_err_t **ledc_channel_config**(**const** *ledc_channel_config_t* **ledc_conf*)

LEDC channel configuration Configure LEDC channel with the given channel/output gpio_num/interrupt/source timer/frequency(Hz)/LEDC duty resolution.

Return
- ESP_OK Success
- ESP_ERR_INVALID_ARG Parameter error

Parameters
- `ledc_conf`: Pointer of LEDC channel configure struct

esp_err_t **ledc_timer_config**(**const** *ledc_timer_config_t* **timer_conf*)

LEDC timer configuration Configure LEDC timer with the given source timer/frequency(Hz)/duty_resolution.

Return
- ESP_OK Success
- ESP_ERR_INVALID_ARG Parameter error
- ESP_FAIL Can not find a proper pre-divider number base on the given frequency and the current duty_resolution.

Parameters
- `timer_conf`: Pointer of LEDC timer configure struct

esp_err_t **ledc_update_duty**(*ledc_mode_t speed_mode*, *ledc_channel_t channel*)

LEDC update channel parameters.

Note Call this function to activate the LEDC updated parameters. After ledc_set_duty, we need to call this function to update the settings. And the new LEDC parameters don't take effect until the next PWM cycle.

Note ledc_set_duty, ledc_set_duty_with_hpoint and ledc_update_duty are not thread-safe, do not call these functions to control one LEDC channel in different tasks at the same time. A thread-safe version of API is ledc_set_duty_and_update

Return
- ESP_OK Success
- ESP_ERR_INVALID_ARG Parameter error

Parameters
- `speed_mode`: Select the LEDC channel group with specified speed mode. Note that not all targets support high speed mode.
- `channel`: LEDC channel (0-7), select from ledc_channel_t

esp_err_t **ledc_set_pin**(int *gpio_num*, *ledc_mode_t speed_mode*, *ledc_channel_t ledc_channel*)

Set LEDC output gpio.

Return
- ESP_OK Success
- ESP_ERR_INVALID_ARG Parameter error

Parameters
- `gpio_num`: The LEDC output gpio
- `speed_mode`: Select the LEDC channel group with specified speed mode. Note that not all targets support high speed mode.
- `ledc_channel`: LEDC channel (0-7), select from ledc_channel_t

esp_err_t **ledc_stop**(*ledc_mode_t speed_mode*, *ledc_channel_t channel*, uint32_t *idle_level*)

LEDC stop. Disable LEDC output, and set idle level.

Return

- ESP_OK Success
- ESP_ERR_INVALID_ARG Parameter error

Parameters

- `speed_mode`: Select the LEDC channel group with specified speed mode. Note that not all targets support high speed mode.
- `channel`: LEDC channel (0-7), select from ledc_channel_t
- `idle_level`: Set output idle level after LEDC stops.

esp_err_t **ledc_set_freq**(*ledc_mode_t speed_mode*, *ledc_timer_t timer_num*, uint32_t *freq_hz*)

LEDC set channel frequency (Hz)

Return

- ESP_OK Success
- ESP_ERR_INVALID_ARG Parameter error
- ESP_FAIL Can not find a proper pre-divider number base on the given frequency and the current duty_resolution.

Parameters

- `speed_mode`: Select the LEDC channel group with specified speed mode. Note that not all targets support high speed mode.
- `timer_num`: LEDC timer index (0-3), select from ledc_timer_t
- `freq_hz`: Set the LEDC frequency

uint32_t **ledc_get_freq**(*ledc_mode_t speed_mode*, *ledc_timer_t timer_num*)

LEDC get channel frequency (Hz)

Return

- 0 error
- Others Current LEDC frequency

Parameters

- `speed_mode`: Select the LEDC channel group with specified speed mode. Note that not all targets support high speed mode.
- `timer_num`: LEDC timer index (0-3), select from ledc_timer_t

esp_err_t **ledc_set_duty_with_hpoint**(*ledc_mode_t speed_mode*, *ledc_channel_t channel*, uint32_t *duty*, uint32_t *hpoint*)

LEDC set duty and hpoint value Only after calling ledc_update_duty will the duty update.

Note ledc_set_duty, ledc_set_duty_with_hpoint and ledc_update_duty are not thread-safe, do not call these functions to control one LEDC channel in different tasks at the same time. A thread-safe version of API is ledc_set_duty_and_update

Note If a fade operation is running in progress on that channel, the driver would not allow it to be stopped. Other duty operations will have to wait until the fade operation has finished.

Return

- ESP_OK Success
- ESP_ERR_INVALID_ARG Parameter error

Parameters

- `speed_mode`: Select the LEDC channel group with specified speed mode. Note that not all targets support high speed mode.
- `channel`: LEDC channel (0-7), select from ledc_channel_t
- `duty`: Set the LEDC duty, the range of duty setting is [0, (2**duty_resolution)]
- `hpoint`: Set the LEDC hpoint value(max: 0xfffff)

int **ledc_get_hpoint**(*ledc_mode_t speed_mode*, *ledc_channel_t channel*)

LEDC get hpoint value, the counter value when the output is set high level.

Return

- LEDC_ERR_VAL if parameter error
- Others Current hpoint value of LEDC channel

Parameters

- `speed_mode`: Select the LEDC channel group with specified speed mode. Note that not all targets support high speed mode.
- `channel`: LEDC channel (0-7), select from ledc_channel_t

esp_err_t **ledc_set_duty**(*ledc_mode_t speed_mode*, *ledc_channel_t channel*, uint32_t *duty*)

LEDC set duty This function do not change the hpoint value of this channel. if needed, please call ledc_set_duty_with_hpoint. only after calling ledc_update_duty will the duty update.

Note ledc_set_duty, ledc_set_duty_with_hpoint and ledc_update_duty are not thread-safe, do not call these functions to control one LEDC channel in different tasks at the same time. A thread-safe version of API is ledc_set_duty_and_update.

Note If a fade operation is running in progress on that channel, the driver would not allow it to be stopped. Other duty operations will have to wait until the fade operation has finished.

Return

- ESP_OK Success
- ESP_ERR_INVALID_ARG Parameter error

Parameters

- `speed_mode`: Select the LEDC channel group with specified speed mode. Note that not all targets support high speed mode.
- `channel`: LEDC channel (0-7), select from ledc_channel_t
- `duty`: Set the LEDC duty, the range of duty setting is [0, (2**duty_resolution)]

uint32_t **ledc_get_duty**(*ledc_mode_t speed_mode*, *ledc_channel_t channel*)

LEDC get duty This function returns the duty at the present PWM cycle. You shouldn't expect the function to return the new duty in the same cycle of calling ledc_update_duty, because duty update doesn't take effect until the next cycle.

Return

- LEDC_ERR_DUTY if parameter error
- Others Current LEDC duty

Parameters

- `speed_mode`: Select the LEDC channel group with specified speed mode. Note that not all targets support high speed mode.
- `channel`: LEDC channel (0-7), select from ledc_channel_t

esp_err_t **ledc_set_fade**(*ledc_mode_t speed_mode*, *ledc_channel_t channel*, uint32_t *duty*, *ledc_duty_direction_t fade_direction*, uint32_t *step_num*, uint32_t *duty_cycle_num*, uint32_t *duty_scale*)

LEDC set gradient Set LEDC gradient, After the function calls the ledc_update_duty function, the function can take effect.

Note If a fade operation is running in progress on that channel, the driver would not allow it to be stopped. Other duty operations will have to wait until the fade operation has finished.

Return

- ESP_OK Success
- ESP_ERR_INVALID_ARG Parameter error

Parameters

- `speed_mode`: Select the LEDC channel group with specified speed mode. Note that not all targets support high speed mode.
- `channel`: LEDC channel (0-7), select from ledc_channel_t
- `duty`: Set the start of the gradient duty, the range of duty setting is [0, (2**duty_resolution)]
- `fade_direction`: Set the direction of the gradient
- `step_num`: Set the number of the gradient
- `duty_cycle_num`: Set how many LEDC tick each time the gradient lasts
- `duty_scale`: Set gradient change amplitude

esp_err_t **ledc_isr_register**(void (**fn*)) void *
, void **arg*, int *intr_alloc_flags*, *ledc_isr_handle_t* **handle*Register LEDC interrupt handler, the handler is an ISR. The handler will be attached to the same CPU core that this function is running on.

Return

- ESP_OK Success

- ESP_ERR_INVALID_ARG Function pointer error.

Parameters

- `fn`: Interrupt handler function.
- `arg`: User-supplied argument passed to the handler function.
- `intr_alloc_flags`: Flags used to allocate the interrupt. One or multiple (ORred) ESP_INTR_FLAG_* values. See esp_intr_alloc.h for more info.
- `handle`: Pointer to return handle. If non-NULL, a handle for the interrupt will be returned here.

esp_err_t **ledc_timer_set**(*ledc_mode_t speed_mode*, *ledc_timer_t timer_sel*, uint32_t *clock_divider*, uint32_t *duty_resolution*, *ledc_clk_src_t clk_src*)

Configure LEDC settings.

Return

- (-1) Parameter error
- Other Current LEDC duty

Parameters

- `speed_mode`: Select the LEDC channel group with specified speed mode. Note that not all targets support high speed mode.
- `timer_sel`: Timer index (0-3), there are 4 timers in LEDC module
- `clock_divider`: Timer clock divide value, the timer clock is divided from the selected clock source
- `duty_resolution`: Resolution of duty setting in number of bits. The range of duty values is [0, (2**duty_resolution)]
- `clk_src`: Select LEDC source clock.

esp_err_t **ledc_timer_rst**(*ledc_mode_t speed_mode*, *ledc_timer_t timer_sel*)

Reset LEDC timer.

Return

- ESP_ERR_INVALID_ARG Parameter error
- ESP_OK Success

Parameters

- `speed_mode`: Select the LEDC channel group with specified speed mode. Note that not all targets support high speed mode.
- `timer_sel`: LEDC timer index (0-3), select from ledc_timer_t

esp_err_t **ledc_timer_pause**(*ledc_mode_t speed_mode*, *ledc_timer_t timer_sel*)

Pause LEDC timer counter.

Return

- ESP_ERR_INVALID_ARG Parameter error
- ESP_OK Success

Parameters

- `speed_mode`: Select the LEDC channel group with specified speed mode. Note that not all targets support high speed mode.
- `timer_sel`: LEDC timer index (0-3), select from ledc_timer_t

esp_err_t **ledc_timer_resume**(*ledc_mode_t speed_mode*, *ledc_timer_t timer_sel*)

Resume LEDC timer.

Return

- ESP_ERR_INVALID_ARG Parameter error
- ESP_OK Success

Parameters

- `speed_mode`: Select the LEDC channel group with specified speed mode. Note that not all targets support high speed mode.
- `timer_sel`: LEDC timer index (0-3), select from ledc_timer_t

esp_err_t **ledc_bind_channel_timer**(*ledc_mode_t speed_mode*, *ledc_channel_t channel*, *ledc_timer_t timer_sel*)

Bind LEDC channel with the selected timer.

Return

- ESP_ERR_INVALID_ARG Parameter error
- ESP_OK Success

Parameters

- `speed_mode`: Select the LEDC channel group with specified speed mode. Note that not all targets support high speed mode.
- `channel`: LEDC channel index (0-7), select from ledc_channel_t
- `timer_sel`: LEDC timer index (0-3), select from ledc_timer_t

esp_err_t **ledc_set_fade_with_step**(*ledc_mode_t speed_mode*, *ledc_channel_t channel*, uint32_t *target_duty*, uint32_t *scale*, uint32_t *cycle_num*)

Set LEDC fade function.

Note Call ledc_fade_func_install() once before calling this function. Call ledc_fade_start() after this to start fading.

Note ledc_set_fade_with_step, ledc_set_fade_with_time and ledc_fade_start are not thread-safe, do not call these functions to control one LEDC channel in different tasks at the same time. A thread-safe version of API is ledc_set_fade_step_and_start

Note If a fade operation is running in progress on that channel, the driver would not allow it to be stopped. Other duty operations will have to wait until the fade operation has finished.

Return

- ESP_ERR_INVALID_ARG Parameter error
- ESP_OK Success
- ESP_ERR_INVALID_STATE Fade function not installed.
- ESP_FAIL Fade function init error

Parameters

- `speed_mode`: Select the LEDC channel group with specified speed mode. Note that not all targets support high speed mode. ,
- `channel`: LEDC channel index (0-7), select from ledc_channel_t
- `target_duty`: Target duty of fading [0, (2**duty_resolution) - 1]
- `scale`: Controls the increase or decrease step scale.
- `cycle_num`: increase or decrease the duty every cycle_num cycles

esp_err_t **ledc_set_fade_with_time**(*ledc_mode_t speed_mode*, *ledc_channel_t channel*, uint32_t *target_duty*, int *max_fade_time_ms*)

Set LEDC fade function, with a limited time.

Note Call ledc_fade_func_install() once before calling this function. Call ledc_fade_start() after this to start fading.

Note ledc_set_fade_with_step, ledc_set_fade_with_time and ledc_fade_start are not thread-safe, do not call these functions to control one LEDC channel in different tasks at the same time. A thread-safe version of API is ledc_set_fade_step_and_start

Note If a fade operation is running in progress on that channel, the driver would not allow it to be stopped. Other duty operations will have to wait until the fade operation has finished.

Return

- ESP_ERR_INVALID_ARG Parameter error
- ESP_OK Success
- ESP_ERR_INVALID_STATE Fade function not installed.
- ESP_FAIL Fade function init error

Parameters

- `speed_mode`: Select the LEDC channel group with specified speed mode. Note that not all targets support high speed mode. ,
- `channel`: LEDC channel index (0-7), select from ledc_channel_t
- `target_duty`: Target duty of fading.(0 - (2 ** duty_resolution - 1)))
- `max_fade_time_ms`: The maximum time of the fading (ms).

esp_err_t **ledc_fade_func_install**(int *intr_alloc_flags*)

Install LEDC fade function. This function will occupy interrupt of LEDC module.

Return

- ESP_OK Success
- ESP_ERR_INVALID_STATE Fade function already installed.

Parameters

- `intr_alloc_flags`: Flags used to allocate the interrupt. One or multiple (ORred) ESP_INTR_FLAG_* values. See esp_intr_alloc.h for more info.

void **ledc_fade_func_uninstall**(void)

Uninstall LEDC fade function.

esp_err_t **ledc_fade_start**(*ledc_mode_t speed_mode*, *ledc_channel_t channel*, *ledc_fade_mode_t fade_mode*)

Start LEDC fading.

Note Call ledc_fade_func_install() once before calling this function. Call this API right after ledc_set_fade_with_time or ledc_set_fade_with_step before to start fading.

Note If a fade operation is running in progress on that channel, the driver would not allow it to be stopped. Other duty operations will have to wait until the fade operation has finished.

Return

- ESP_OK Success
- ESP_ERR_INVALID_STATE Fade function not installed.
- ESP_ERR_INVALID_ARG Parameter error.

Parameters

- `speed_mode`: Select the LEDC channel group with specified speed mode. Note that not all targets support high speed mode.
- `channel`: LEDC channel number
- `fade_mode`: Whether to block until fading done. See ledc_types.h ledc_fade_mode_t for more info. Note that this function will not return until fading to the target duty if LEDC_FADE_WAIT_DONE mode is selected.

esp_err_t **ledc_set_duty_and_update**(*ledc_mode_t speed_mode*, *ledc_channel_t channel*, uint32_t *duty*, uint32_t *hpoint*)

A thread-safe API to set duty for LEDC channel and return when duty updated.

Note If a fade operation is running in progress on that channel, the driver would not allow it to be stopped. Other duty operations will have to wait until the fade operation has finished.

Parameters

- `speed_mode`: Select the LEDC channel group with specified speed mode. Note that not all targets support high speed mode.
- `channel`: LEDC channel (0-7), select from ledc_channel_t
- `duty`: Set the LEDC duty, the range of duty setting is [0, (2**duty_resolution)]
- `hpoint`: Set the LEDC hpoint value(max: 0xfffff)

esp_err_t **ledc_set_fade_time_and_start**(*ledc_mode_t speed_mode*, *ledc_channel_t channel*, uint32_t *target_duty*, uint32_t *max_fade_time_ms*, *ledc_fade_mode_t fade_mode*)

A thread-safe API to set and start LEDC fade function, with a limited time.

Note Call ledc_fade_func_install() once, before calling this function.

Note If a fade operation is running in progress on that channel, the driver would not allow it to be stopped. Other duty operations will have to wait until the fade operation has finished.

Return

- ESP_ERR_INVALID_ARG Parameter error
- ESP_OK Success
- ESP_ERR_INVALID_STATE Fade function not installed.
- ESP_FAIL Fade function init error

Parameters

- `speed_mode`: Select the LEDC channel group with specified speed mode. Note that not all targets support high speed mode.
- `channel`: LEDC channel index (0-7), select from ledc_channel_t
- `target_duty`: Target duty of fading.(0 - (2 ** duty_resolution - 1)))
- `max_fade_time_ms`: The maximum time of the fading (ms).
- `fade_mode`: choose blocking or non-blocking mode

esp_err_t **ledc_set_fade_step_and_start**(*ledc_mode_t speed_mode*, *ledc_channel_t channel*, uint32_t *target_duty*, uint32_t *scale*, uint32_t *cycle_num*, *ledc_fade_mode_t fade_mode*)

A thread-safe API to set and start LEDC fade function.

Note Call ledc_fade_func_install() once before calling this function.

Note If a fade operation is running in progress on that channel, the driver would not allow it to be stopped. Other duty operations will have to wait until the fade operation has finished.

Return

- ESP_ERR_INVALID_ARG Parameter error
- ESP_OK Success
- ESP_ERR_INVALID_STATE Fade function not installed.
- ESP_FAIL Fade function init error

Parameters

- `speed_mode`: Select the LEDC channel group with specified speed mode. Note that not all targets support high speed mode.
- `channel`: LEDC channel index (0-7), select from ledc_channel_t
- `target_duty`: Target duty of fading [0, (2**duty_resolution) - 1]
- `scale`: Controls the increase or decrease step scale.
- `cycle_num`: increase or decrease the duty every cycle_num cycles
- `fade_mode`: choose blocking or non-blocking mode

Macros

LEDC_APB_CLK_HZ

LEDC_REF_CLK_HZ

LEDC_ERR_DUTY

LEDC_ERR_VAL

Type Definitions

typedef *intr_handle_t* **ledc_isr_handle_t**

Header File

- hal/include/hal/ledc_types.h

Structures

struct ledc_channel_config_t

Configuration parameters of LEDC channel for ledc_channel_config function.

Public Members

int **gpio_num**

the LEDC output gpio_num, if you want to use gpio16, gpio_num = 16

ledc_mode_t **speed_mode**

LEDC speed speed_mode, high-speed mode or low-speed mode

ledc_channel_t **channel**

LEDC channel (0 - 7)

ledc_intr_type_t **intr_type**

configure interrupt, Fade interrupt enable or Fade interrupt disable

ledc_timer_t **timer_sel**

Select the timer source of channel (0 - 3)

uint32_t **duty**
LEDC channel duty, the range of duty setting is [0, (2**duty_resolution)]

int **hpoint**
LEDC channel hpoint value, the max value is 0xfffff

struct ledc_timer_config_t
Configuration parameters of LEDC Timer timer for ledc_timer_config function.

Public Members

ledc_mode_t **speed_mode**
LEDC speed speed_mode, high-speed mode or low-speed mode

ledc_timer_bit_t **duty_resolution**
LEDC channel duty resolution

ledc_timer_bit_t **bit_num**
Deprecated in ESP-IDF 3.0. This is an alias to ‘duty_resolution’ for backward compatibility with ESP-IDF 2.1

ledc_timer_t **timer_num**
The timer source of channel (0 - 3)

uint32_t **freq_hz**
LEDC timer frequency (Hz)

ledc_clk_cfg_t **clk_cfg**
Configure LEDC source clock. For low speed channels and high speed channels, you can specify the source clock using LEDC_USE_REF_TICK, LEDC_USE_APB_CLK or LEDC_AUTO_CLK. For low speed channels, you can also specify the source clock using LEDC_USE_RTC8M_CLK, in this case, all low speed channel’s source clock must be RTC8M_CLK

Enumerations

enum ledc_mode_t
Values:

LEDC_HIGH_SPEED_MODE = 0
LEDC high speed speed_mode

LEDC_LOW_SPEED_MODE
LEDC low speed speed_mode

LEDC_SPEED_MODE_MAX
LEDC speed limit

enum ledc_intr_type_t
Values:

LEDC_INTR_DISABLE = 0
Disable LEDC interrupt

LEDC_INTR_FADE_END
Enable LEDC interrupt

LEDC_INTR_MAX

enum ledc_duty_direction_t
Values:

LEDC_DUTY_DIR_DECREASE = 0
LEDC duty decrease direction

LEDC_DUTY_DIR_INCREASE = 1
LEDC duty increase direction

LEDC_DUTY_DIR_MAX

enum ledc_slow_clk_sel_t

Values:

LEDC_SLOW_CLK_RTC8M = 0
LEDC low speed timer clock source is 8MHz RTC clock

LEDC_SLOW_CLK_APB
LEDC low speed timer clock source is 80MHz APB clock

enum ledc_clk_cfg_t

Values:

LEDC_AUTO_CLK = 0
The driver will automatically select the source clock(REF_TICK or APB) based on the giving resolution and duty parameter when init the timer

LEDC_USE_REF_TICK
LEDC timer select REF_TICK clock as source clock

LEDC_USE_APB_CLK
LEDC timer select APB clock as source clock

LEDC_USE_RTC8M_CLK
LEDC timer select RTC8M_CLK as source clock. Only for low speed channels and this parameter must be the same for all low speed channels

enum ledc_clk_src_t

Values:

LEDC_REF_TICK = *LEDC_USE_REF_TICK*
LEDC timer clock divided from reference tick (1Mhz)

LEDC_APB_CLK = *LEDC_USE_APB_CLK*
LEDC timer clock divided from APB clock (80Mhz)

enum ledc_timer_t

Values:

LEDC_TIMER_0 = 0
LEDC timer 0

LEDC_TIMER_1
LEDC timer 1

LEDC_TIMER_2
LEDC timer 2

LEDC_TIMER_3
LEDC timer 3

LEDC_TIMER_MAX

enum ledc_channel_t

Values:

LEDC_CHANNEL_0 = 0
LEDC channel 0

LEDC_CHANNEL_1
LEDC channel 1

LEDC_CHANNEL_2
LEDC channel 2

LEDC_CHANNEL_3
LEDC channel 3

LEDC_CHANNEL_4
LEDC channel 4

LEDC_CHANNEL_5
LEDC channel 5

LEDC_CHANNEL_6
LEDC channel 6

LEDC_CHANNEL_7
LEDC channel 7

LEDC_CHANNEL_MAX

enum ledc_timer_bit_t
Values:

LEDC_TIMER_1_BIT = 1
LEDC PWM duty resolution of 1 bits

LEDC_TIMER_2_BIT
LEDC PWM duty resolution of 2 bits

LEDC_TIMER_3_BIT
LEDC PWM duty resolution of 3 bits

LEDC_TIMER_4_BIT
LEDC PWM duty resolution of 4 bits

LEDC_TIMER_5_BIT
LEDC PWM duty resolution of 5 bits

LEDC_TIMER_6_BIT
LEDC PWM duty resolution of 6 bits

LEDC_TIMER_7_BIT
LEDC PWM duty resolution of 7 bits

LEDC_TIMER_8_BIT
LEDC PWM duty resolution of 8 bits

LEDC_TIMER_9_BIT
LEDC PWM duty resolution of 9 bits

LEDC_TIMER_10_BIT
LEDC PWM duty resolution of 10 bits

LEDC_TIMER_11_BIT
LEDC PWM duty resolution of 11 bits

LEDC_TIMER_12_BIT
LEDC PWM duty resolution of 12 bits

LEDC_TIMER_13_BIT
LEDC PWM duty resolution of 13 bits

LEDC_TIMER_14_BIT
LEDC PWM duty resolution of 14 bits

LEDC_TIMER_15_BIT
LEDC PWM duty resolution of 15 bits

LEDC_TIMER_16_BIT
LEDC PWM duty resolution of 16 bits

LEDC_TIMER_17_BIT
LEDC PWM duty resolution of 17 bits

LEDC_TIMER_18_BIT
LEDC PWM duty resolution of 18 bits

LEDC_TIMER_19_BIT
LEDC PWM duty resolution of 19 bits

LEDC_TIMER_20_BIT
LEDC PWM duty resolution of 20 bits

LEDC_TIMER_BIT_MAX

enum ledc_fade_mode_t
Values:

LEDC_FADE_NO_WAIT = 0
LEDC fade function will return immediately

LEDC_FADE_WAIT_DONE
LEDC fade function will block until fading to the target duty

LEDC_FADE_MAX

2.3.8 MCPWM

ESP32 has two MCPWM units which can be used to control different types of motors. Each unit has three pairs of PWM outputs.

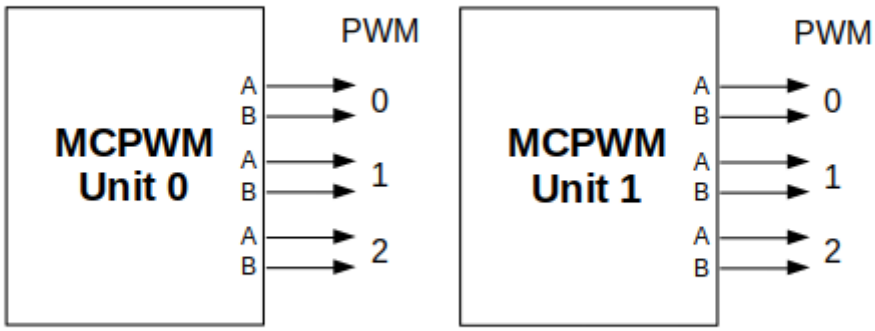

图 10: MCPWM Overview

Further in documentation the outputs of a single unit are labeled `PWMxA` / `PWMxB`.

More detailed block diagram of the MCPWM unit is shown below. Each A/B pair may be clocked by any one of the three timers Timer 0, 1 and 2. The same timer may be used to clock more than one pair of PWM outputs. Each unit is also able to collect inputs such as `SYNC SIGNALS`, detect `FAULT SIGNALS` like motor overcurrent or overvoltage, as well as obtain feedback with `CAPTURE SIGNALS` on e.g. a rotor position.

Description of this API starts with configuration of MCPWM's **Timer** and **Generator** submodules to provide the basic motor control functionality. Then it discusses more advanced submodules and functionalities of a **Fault Handler**, signal **Capture**, **Carrier** and **Interrupts**.

Contents

- *Configure* a basic functionality of the outputs
- *Operate* the outputs to drive a motor
- *Adjust* how the motor is driven
- *Capture* external signals to provide additional control over the outputs
- Use *Fault Handler* to detect and manage faults
- Add a higher frequency *Carrier*, if output signals are passed through an isolation transformer

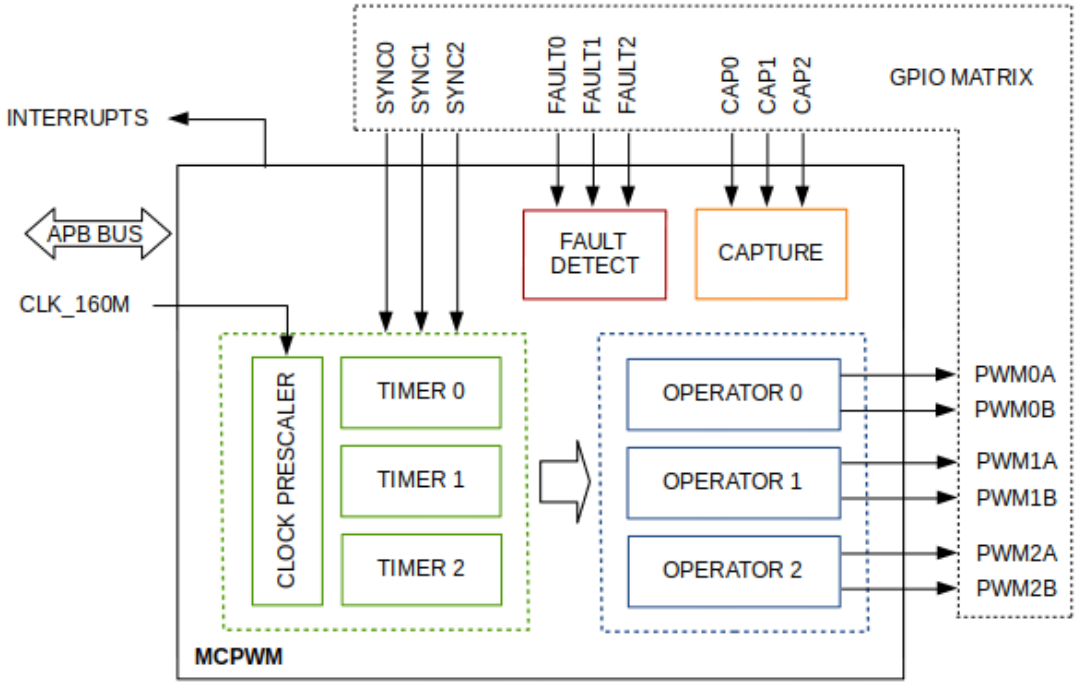

图 11: MCPWM Block Diagram

- Configuration and handling of *Interrupts*.

Configure

The scope of configuration depends on the motor type, in particular how many outputs and inputs are required, and what will be the sequence of signals to drive the motor.

In this case we will describe a simple configuration to control a brushed DC motor that is using only some of the available MCPWM's resources. An example circuit is shown below. It includes a H-Bridge to switch polarization of a voltage applied to the motor (M) and to provide sufficient current to drive it.

Configuration covers the following steps:

1. Selection of a MPWn unit that will be used to drive the motor. There are two units available on-board of ESP32 and enumerated in `mcpwm_unit_t`.
2. Initialization of two GPIOs as output signals within selected unit by calling `mcpwm_gpio_init()`. The two output signals are typically used to command the motor to rotate right or left. All available signal options are listed in `mcpwm_io_signals_t`. To set more than a single pin at a time, use function `mcpwm_set_pin()` together with `mcpwm_pin_config_t`.
3. Selection of a timer. There are three timers available within the unit. The timers are listed in `mcpwm_timer_t`.
4. Setting of the timer frequency and initial duty within `mcpwm_config_t` structure.
5. Calling of `mcpwm_init()` with the above parameters to make the configuration effective.

Operate

To operate a motor connected to the MCPWM unit, e.g. turn it left or right, or vary the speed, we should apply some control signals to the unit's outputs. The outputs are organized into three pairs. Within a pair they are labeled "A" and "B" and each driven by a submodule called an "Generator". To provide a PWM signal, the Operator itself,

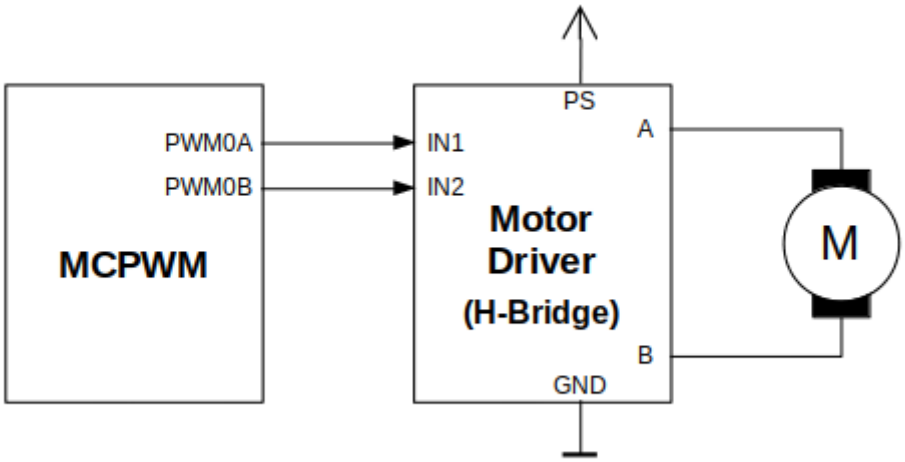

图 12: Example of Brushed DC Motor Control with MCPWM

which contains two Generator, should be clocked by one of three available Timers. To make the API simpler, each Timer is automatically associated by the API to drive an Operator of the same index, e.g. Timer 0 is associated with Operator 0.

There are the following basic ways to control the outputs:

- We can drive particular signal steady high or steady low with function *mcpwm_set_signal_high()* or *mcpwm_set_signal_low()*. This will make the motor to turn with a maximum speed or stop. Depending on selected output A or B the motor will rotate either right or left.
- Another option is to drive the outputs with the PWM signal by calling *mcpwm_start()* or *mcpwm_stop()*. The motor speed will be proportional to the PWM duty.
- To vary PWM' s duty call *mcpwm_set_duty()* and provide the duty value in %. Optionally, you may call *mcpwm_set_duty_in_us()*, if you prefer to set the duty in microseconds. Checking of currently set value is possible by calling *mcpwm_get_duty()*. Phase of the PWM signal may be altered by calling *mcpwm_set_duty_type()*. The duty is set individually for each A and B output using *mcpwm_generator_t* in specific function calls. The duty value refers either to high or low output signal duration. This is configured when calling *mcpwm_init()*, as discussed in section *Configure*, and selecting one of options from *mcpwm_duty_type_t*.

注解: Call function *mcpwm_set_duty_type()* every time after *mcpwm_set_signal_high()* or *mcpwm_set_signal_low()* to resume with previously set duty cycle.

Adjust

There are couple of ways to adjust a signal on the outputs and changing how the motor operates.

- Set specific PWM frequency by calling *mcpwm_set_frequency()*. This may be required to adjust to electrical or mechanical characteristics of particular motor and driver. To check what frequency is set, use function *mcpwm_get_frequency()*.
- Introduce a dead time between outputs A and B when they are changing the state to reverse direction of the motor rotation. This is to make up for on/off switching delay of the motor driver FETs. The dead time options are defined in *mcpwm_deadtime_type_t* and enabled by calling *mcpwm_deadtime_enable()*. To disable this functionality call *mcpwm_deadtime_disable()*.
- Synchronize outputs of operator submodules, e.g. to get raising edge of PWM0A/B and PWM1A/B to start exactly at the same time, or shift them between each other by a given phase. Synchronization is triggered by SYNC SIGNALS shown on the *block diagram* of the MCPWM above, and defined in *mcpwm_sync_signal_t*.

To attach the signal to a GPIO call `mcpwm_gpio_init()`. You can then enable synchronization with function `mcpwm_sync_enable()`. As input parameters provide MCPWM unit, timer to synchronize, the synchronization signal and a phase to delay the timer.

注 解: Synchronization signals are referred to using two different enumerations. First one `mcpwm_io_signals_t` is used together with function `mcpwm_gpio_init()` when selecting a GPIO as the signal input source. The second one `mcpwm_sync_signal_t` is used when enabling or disabling synchronization with `mcpwm_sync_enable()` or `mcpwm_sync_disable()`.

- Vary the pattern of the A/B output signals by getting MCPWM counters to count up, down and up/down (automatically changing the count direction). Respective configuration is done when calling `mcpwm_init()`, as discussed in section *Configure*, and selecting one of counter types from `mcpwm_counter_type_t`. For explanation of how A/B PWM output signals are generated, see *ESP32 Technical Reference Manual* > *Motor Control PWM (MCPWM)* [PDF].

Capture

One of requirements of BLDC (Brushless DC, see figure below) motor control is sensing of the rotor position. To facilitate this task each MCPWM unit provides three sensing inputs together with dedicated hardware. The hardware is able to detect the input signal's edge and measure time between signals. As result the control software is simpler and the CPU power may be used for other tasks.

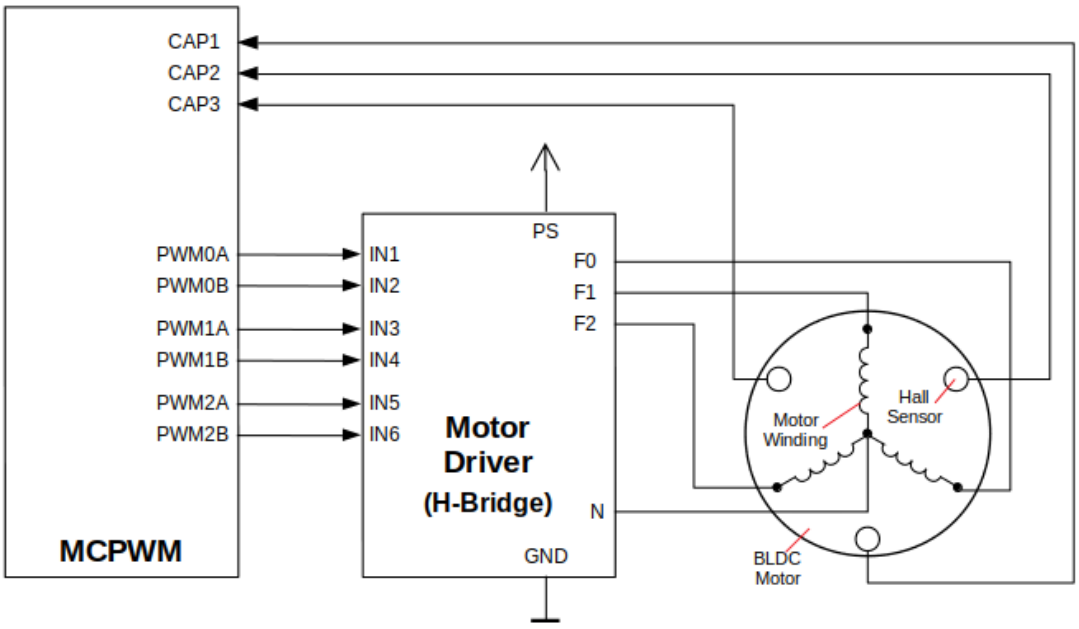

图 13: Example of Brushless DC Motor Control with MCPWM

The capture functionality may be used for other types of motors or tasks. The functionality is enabled in two steps:

1. Configuration of GPIOs to act as the capture signal inputs by calling functions `mcpwm_gpio_init()` or `mcpwm_set_pin()`, that were described in section *Configure*.
2. Enabling of the functionality itself by invoking `mcpwm_capture_enable()`, selecting desired signal input from `mcpwm_capture_signal_t`, setting the signal edge with `mcpwm_capture_on_edge_t` and the signal count prescaler.

Within the second step above a 32-bit capture timer is enabled. The timer runs continuously driven by the APB clock. The clock frequency is typically 80 MHz. On each capture event the capture timer's value is stored in time-stamp

register that may be then checked by calling *mcpwm_capture_signal_get_value()*. The edge of the last signal may be checked with *mcpwm_capture_signal_get_edge()*.

If not required anymore, the capture functionality may be disabled with *mcpwm_capture_disable()*.

Fault Handler

Each unit of the MCPWM is able to sense external signals with information about failure of the motor, the motor driver or any other device connected to the MCPWM. There are three fault inputs per unit that may be routed to user selectable GPIOs. The MCPWM may be configured to perform one of four predefined actions on A/B outputs when a fault signal is received:

- lock current state of the output
- set the output low
- set the output high
- toggle the output

The user should determine possible failure modes of the motor and what action should be performed on detection of particular fault, e.g. drive all outputs low for a brushed motor, or lock current state for a stepper motor, etc. As result of this action the motor should be put into a safe state to reduce likelihood of a damage caused by the fault.

The fault handler functionality is enabled in two steps:

1. Configuration of GPIOs to act as fault signal inputs. This is done in analogous way as described for capture signals in section above. It includes setting the signal level to trigger the fault as defined in *mcpwm_fault_input_level_t*.
2. Initialization of the fault handler by calling either *mcpwm_fault_set_oneshot_mode()* or *mcpwm_fault_set_cyc_mode()*. These functions set the mode that MCPWM should operate once fault signal becomes inactive. There are two modes possible:

   - State of MCPWM unit will be locked until reset - *mcpwm_fault_set_oneshot_mode()*.
   - The MCPWM will resume operation once fault signal becoming inactive - *mcpwm_fault_set_cyc_mode()*.

   The function call parameters include selection of one of three fault inputs defined in *mcpwm_fault_signal_t* and specific action on outputs A and B defined in *mcpwm_action_on_pwmxa_t* and *mcpwm_action_on_pwmxb_t*.

Particular fault signal may be disabled at the runtime by calling *mcpwm_fault_deinit()*.

Carrier

The MCPWM has a carrier submodule used if galvanic isolation from the motor driver is required by passing the A/B output signals through transformers. Any of A and B output signals may be at 100% duty and not changing whenever motor is required to run steady at the full load. Coupling of non alternating signals with a transformer is problematic, so the signals are modulated by the carrier submodule to create an AC waveform, to make the coupling possible.

To use the carrier submodule, it should be first initialized by calling *mcpwm_carrier_init()*. The carrier parameters are defined in *mcpwm_carrier_config_t* structure invoked within the function call. Then the carrier functionality may be enabled by calling *mcpwm_carrier_enable()*.

The carrier parameters may be then alerted at a runtime by calling dedicated functions to change individual fields of the *mcpwm_carrier_config_t* structure, like *mcpwm_carrier_set_period()*, *mcpwm_carrier_set_duty_cycle()*, *mcpwm_carrier_output_invert()*, etc.

This includes enabling and setting duration of the first pulse of the career with *mcpwm_carrier_oneshot_mode_enable()*. For more details, see *ESP32 Technical Reference Manual* > *Motor Control PWM (MCPWM)* > *PWM Carrier Submodule* [PDF].

To disable carrier functionality call *mcpwm_carrier_disable()*.

Interrupts

Registering of the MCPWM interrupt handler is possible by calling `mcpwm_isr_register()`.

Application Example

Examples of using MCPWM for motor control: peripherals/mcpwm:

- Demonstration how to use each submodule of the MCPWM - peripherals/mcpwm/mcpwm_basic_config
- Control of BLDC (brushless DC) motor with hall sensor feedback - peripherals/mcpwm/mcpwm_bldc_control
- Brushed DC motor control - peripherals/mcpwm/mcpwm_brushed_dc_control
- Servo motor control - peripherals/mcpwm/mcpwm_servo_control

API Reference

Header File

- hal/include/hal/mcpwm_types.h

Enumerations

enum mcpwm_intr_t

Interrupts for MCPWM.

Values:

MCPWM_LL_INTR_CAP0 = BIT(27)
Capture 0 happened.

MCPWM_LL_INTR_CAP1 = BIT(28)
Capture 1 happened.

MCPWM_LL_INTR_CAP2 = BIT(29)
Capture 2 happened.

enum mcpwm_counter_type_t

Select type of MCPWM counter.

Values:

MCPWM_UP_COUNTER = 1
For asymmetric MCPWM

MCPWM_DOWN_COUNTER
For asymmetric MCPWM

MCPWM_UP_DOWN_COUNTER
For symmetric MCPWM, frequency is half of MCPWM frequency set

MCPWM_COUNTER_MAX
Maximum counter mode

enum mcpwm_duty_type_t

Select type of MCPWM duty cycle mode.

Values:

MCPWM_DUTY_MODE_0 = 0
Active high duty, i.e. duty cycle proportional to high time for asymmetric MCPWM

MCPWM_DUTY_MODE_1
Active low duty, i.e. duty cycle proportional to low time for asymmetric MCPWM, out of phase(inverted) MCPWM

MCPWM_HAL_GENERATOR_MODE_FORCE_LOW

MCPWM_HAL_GENERATOR_MODE_FORCE_HIGH

MCPWM_DUTY_MODE_MAX
Num of duty cycle modes

enum mcpwm_output_action_t
MCPWM select action to be taken on the output when event happens.

Values:

MCPWM_ACTION_NO_CHANGE = 0
No change in the output

MCPWM_ACTION_FORCE_LOW
Make output low

MCPWM_ACTION_FORCE_HIGH
Make output high

MCPWM_ACTION_TOGGLE
Make output toggle

enum mcpwm_deadtime_type_t
MCPWM deadtime types, used to generate deadtime, RED refers to rising edge delay and FED refers to falling edge delay.

Values:

MCPWM_DEADTIME_BYPASS = 0
Bypass the deadtime

MCPWM_BYPASS_RED
MCPWMXA Out = MCPWMXA In with no delay, MCPWMXB Out = MCPWMXA In with falling edge delay

MCPWM_BYPASS_FED
MCPWMXA Out = MCPWMXA In with rising edge delay, MCPWMXB Out = MCPWMXB In with no delay

MCPWM_ACTIVE_HIGH_MODE
MCPWMXA Out = MCPWMXA In with rising edge delay, MCPWMXB Out = MCPWMXA In with falling edge delay

MCPWM_ACTIVE_LOW_MODE
MCPWMXA Out = MCPWMXA In with compliment of rising edge delay, MCPWMXB Out = MCPWMXA In with compliment of falling edge delay

MCPWM_ACTIVE_HIGH_COMPLIMENT_MODE
MCPWMXA Out = MCPWMXA In with rising edge delay, MCPWMXB = MCPWMXA In with compliment of falling edge delay

MCPWM_ACTIVE_LOW_COMPLIMENT_MODE
MCPWMXA Out = MCPWMXA In with compliment of rising edge delay, MCPWMXB Out = MCPWMXA In with falling edge delay

MCPWM_ACTIVE_RED_FED_FROM_PWMXA
MCPWMXA Out = MCPWMXB Out = MCPWMXA In with rising edge delay as well as falling edge delay

MCPWM_ACTIVE_RED_FED_FROM_PWMXB
MCPWMXA Out = MCPWMXB Out = MCPWMXB In with rising edge delay as well as falling edge delay

MCPWM_DEADTIME_TYPE_MAX

enum mcpwm_sync_signal_t
MCPWM select sync signal input.

Values:

MCPWM_SELECT_SYNC0 = 4
Select SYNC0 as input

MCPWM_SELECT_SYNC1
Select SYNC1 as input

MCPWM_SELECT_SYNC2
Select SYNC2 as input

enum mcpwm_capture_on_edge_t
MCPWM select capture starts from which edge.

Values:

MCPWM_NEG_EDGE = BIT(0)
Capture the negative edge

MCPWM_POS_EDGE = BIT(1)
Capture the positive edge

MCPWM_BOTH_EDGE = BIT(1) | BIT(0)
Capture both edges

Header File

- driver/include/driver/mcpwm.h

Functions

esp_err_t **mcpwm_gpio_init**(*mcpwm_unit_t mcpwm_num*, *mcpwm_io_signals_t io_signal*, int *gpio_num*)
This function initializes each gpio signal for MCPWM.

Note This function initializes one gpio at a time.
Return
- ESP_OK Success
- ESP_ERR_INVALID_ARG Parameter error

Parameters
- `mcpwm_num`: set MCPWM unit(0-1)
- `io_signal`: set MCPWM signals, each MCPWM unit has 6 output(MCPWMXA, MCPWMXB) and 9 input(SYNC_X, FAULT_X, CAP_X) 'X' is timer_num(0-2)
- `gpio_num`: set this to configure gpio for MCPWM, if you want to use gpio16, gpio_num = 16

esp_err_t **mcpwm_set_pin**(*mcpwm_unit_t mcpwm_num*, **const** *mcpwm_pin_config_t* **mcpwm_pin*)
Initialize MCPWM gpio structure.

Note This function can be used to initialize more then one gpio at a time.
Return
- ESP_OK Success
- ESP_ERR_INVALID_ARG Parameter error

Parameters
- `mcpwm_num`: set MCPWM unit(0-1)
- `mcpwm_pin`: MCPWM pin structure

esp_err_t **mcpwm_init**(*mcpwm_unit_t mcpwm_num*, *mcpwm_timer_t timer_num*, **const** *mcpwm_config_t* **mcpwm_conf*)
Initialize MCPWM parameters.

Return
- ESP_OK Success
- ESP_ERR_INVALID_ARG Parameter error

Parameters
- `mcpwm_num`: set MCPWM unit(0-1)
- `timer_num`: set timer number(0-2) of MCPWM, each MCPWM unit has 3 timers.
- `mcpwm_conf`: configure structure *mcpwm_config_t*

esp_err_t **mcpwm_set_frequency**(*mcpwm_unit_t mcpwm_num*, *mcpwm_timer_t timer_num*, uint32_t *frequency*)

Set frequency(in Hz) of MCPWM timer.

Return

- ESP_OK Success
- ESP_ERR_INVALID_ARG Parameter error

Parameters

- `mcpwm_num`: set MCPWM unit(0-1)
- `timer_num`: set timer number(0-2) of MCPWM, each MCPWM unit has 3 timers
- `frequency`: set the frequency in Hz of each timer

esp_err_t **mcpwm_set_duty**(*mcpwm_unit_t mcpwm_num*, *mcpwm_timer_t timer_num*, *mcpwm_generator_t gen*, float *duty*)

Set duty cycle of each operator(MCPWMXA/MCPWMXB)

Return

- ESP_OK Success
- ESP_ERR_INVALID_ARG Parameter error

Parameters

- `mcpwm_num`: set MCPWM unit(0-1)
- `timer_num`: set timer number(0-2) of MCPWM, each MCPWM unit has 3 timers
- `gen`: set the generator(MCPWMXA/MCPWMXB), 'X' is operator number selected
- `duty`: set duty cycle in %(i.e for 62.3% duty cycle, duty = 62.3) of each operator

esp_err_t **mcpwm_set_duty_in_us**(*mcpwm_unit_t mcpwm_num*, *mcpwm_timer_t timer_num*, *mcpwm_generator_t gen*, uint32_t *duty_in_us*)

Set duty cycle of each operator(MCPWMXA/MCPWMXB) in us.

Return

- ESP_OK Success
- ESP_ERR_INVALID_ARG Parameter error

Parameters

- `mcpwm_num`: set MCPWM unit(0-1)
- `timer_num`: set timer number(0-2) of MCPWM, each MCPWM unit has 3 timers
- `gen`: set the generator(MCPWMXA/MCPWMXB), 'x' is operator number selected
- `duty_in_us`: set duty value in microseconds of each operator

esp_err_t **mcpwm_set_duty_type**(*mcpwm_unit_t mcpwm_num*, *mcpwm_timer_t timer_num*, *mcpwm_generator_t gen*, *mcpwm_duty_type_t duty_type*)

Set duty either active high or active low(out of phase/inverted)

Note Call this function every time after mcpwm_set_signal_high or mcpwm_set_signal_low to resume with previously set duty cycle

Return

- ESP_OK Success
- ESP_ERR_INVALID_ARG Parameter error

Parameters

- `mcpwm_num`: set MCPWM unit(0-1)
- `timer_num`: set timer number(0-2) of MCPWM, each MCPWM unit has 3 timers
- `gen`: set the generator(MCPWMXA/MCPWMXB), 'x' is operator number selected
- `duty_type`: set active low or active high duty type

uint32_t **mcpwm_get_frequency**(*mcpwm_unit_t mcpwm_num*, *mcpwm_timer_t timer_num*)

Get frequency of timer.

Return

- frequency of timer

Parameters

- `mcpwm_num`: set MCPWM unit(0-1)
- `timer_num`: set timer number(0-2) of MCPWM, each MCPWM unit has 3 timers

float **mcpwm_get_duty**(*mcpwm_unit_t mcpwm_num*, *mcpwm_timer_t timer_num*, *mcpwm_operator_t gen*)

Get duty cycle of each operator.

Return
- duty cycle in % of each operator(56.7 means duty is 56.7%)

Parameters
- `mcpwm_num`: set MCPWM unit(0-1)
- `timer_num`: set timer number(0-2) of MCPWM, each MCPWM unit has 3 timers
- `gen`: set the generator(MCPWMXA/MCPWMXB), 'x' is operator number selected

esp_err_t **mcpwm_set_signal_high**(*mcpwm_unit_t mcpwm_num*, *mcpwm_timer_t timer_num*, *mcpwm_generator_t gen*)

Use this function to set MCPWM signal high.

Return
- ESP_OK Success
- ESP_ERR_INVALID_ARG Parameter error

Parameters
- `mcpwm_num`: set MCPWM unit(0-1)
- `timer_num`: set timer number(0-2) of MCPWM, each MCPWM unit has 3 timers
- `gen`: set the operator(MCPWMXA/MCPWMXB), 'x' is timer number selected

esp_err_t **mcpwm_set_signal_low**(*mcpwm_unit_t mcpwm_num*, *mcpwm_timer_t timer_num*, *mcpwm_generator_t gen*)

Use this function to set MCPWM signal low.

Return
- ESP_OK Success
- ESP_ERR_INVALID_ARG Parameter error

Parameters
- `mcpwm_num`: set MCPWM unit(0-1)
- `timer_num`: set timer number(0-2) of MCPWM, each MCPWM unit has 3 timers
- `gen`: set the operator(MCPWMXA/MCPWMXB), 'x' is timer number selected

esp_err_t **mcpwm_start**(*mcpwm_unit_t mcpwm_num*, *mcpwm_timer_t timer_num*)

Start MCPWM signal on timer 'x'.

Return
- ESP_OK Success
- ESP_ERR_INVALID_ARG Parameter error

Parameters
- `mcpwm_num`: set MCPWM unit(0-1)
- `timer_num`: set timer number(0-2) of MCPWM, each MCPWM unit has 3 timers

esp_err_t **mcpwm_stop**(*mcpwm_unit_t mcpwm_num*, *mcpwm_timer_t timer_num*)

Start MCPWM signal on timer 'x'.

Return
- ESP_OK Success
- ESP_ERR_INVALID_ARG Parameter error

Parameters
- `mcpwm_num`: set MCPWM unit(0-1)
- `timer_num`: set timer number(0-2) of MCPWM, each MCPWM unit has 3 timers

esp_err_t **mcpwm_carrier_init**(*mcpwm_unit_t mcpwm_num*, *mcpwm_timer_t timer_num*, **const** *mcpwm_carrier_config_t *carrier_conf*)

Initialize carrier configuration.

Return
- ESP_OK Success
- ESP_ERR_INVALID_ARG Parameter error

Parameters
- `mcpwm_num`: set MCPWM unit(0-1)
- `timer_num`: set timer number(0-2) of MCPWM, each MCPWM unit has 3 timers
- `carrier_conf`: configure structure *mcpwm_carrier_config_t*

esp_err_t **mcpwm_carrier_enable**(*mcpwm_unit_t mcpwm_num*, *mcpwm_timer_t timer_num*)

Enable MCPWM carrier submodule, for respective timer.

Return

- ESP_OK Success
- ESP_ERR_INVALID_ARG Parameter error

Parameters

- `mcpwm_num`: set MCPWM unit(0-1)
- `timer_num`: set timer number(0-2) of MCPWM, each MCPWM unit has 3 timers

esp_err_t **mcpwm_carrier_disable**(*mcpwm_unit_t mcpwm_num*, *mcpwm_timer_t timer_num*)

Disable MCPWM carrier submodule, for respective timer.

Return

- ESP_OK Success
- ESP_ERR_INVALID_ARG Parameter error

Parameters

- `mcpwm_num`: set MCPWM unit(0-1)
- `timer_num`: set timer number(0-2) of MCPWM, each MCPWM unit has 3 timers

esp_err_t **mcpwm_carrier_set_period**(*mcpwm_unit_t mcpwm_num*, *mcpwm_timer_t timer_num*, uint8_t *carrier_period*)

Set period of carrier.

Return

- ESP_OK Success
- ESP_ERR_INVALID_ARG Parameter error

Parameters

- `mcpwm_num`: set MCPWM unit(0-1)
- `timer_num`: set timer number(0-2) of MCPWM, each MCPWM unit has 3 timers
- `carrier_period`: set the carrier period of each timer, carrier period = (carrier_period + 1)*800ns (carrier_period <= 15)

esp_err_t **mcpwm_carrier_set_duty_cycle**(*mcpwm_unit_t mcpwm_num*, *mcpwm_timer_t timer_num*, uint8_t *carrier_duty*)

Set duty_cycle of carrier.

Return

- ESP_OK Success
- ESP_ERR_INVALID_ARG Parameter error

Parameters

- `mcpwm_num`: set MCPWM unit(0-1)
- `timer_num`: set timer number(0-2) of MCPWM, each MCPWM unit has 3 timers
- `carrier_duty`: set duty_cycle of carrier , carrier duty cycle = carrier_duty*12.5% (chop_duty <= 7)

esp_err_t **mcpwm_carrier_oneshot_mode_enable**(*mcpwm_unit_t mcpwm_num*, *mcpwm_timer_t timer_num*, uint8_t *pulse_width*)

Enable and set width of first pulse in carrier oneshot mode.

Return

- ESP_OK Success
- ESP_ERR_INVALID_ARG Parameter error

Parameters

- `mcpwm_num`: set MCPWM unit(0-1)
- `timer_num`: set timer number(0-2) of MCPWM, each MCPWM unit has 3 timers
- `pulse_width`: set pulse width of first pulse in oneshot mode, width = (carrier period)*(pulse_width +1) (pulse_width <= 15)

esp_err_t **mcpwm_carrier_oneshot_mode_disable**(*mcpwm_unit_t mcpwm_num*, *mcpwm_timer_t timer_num*)

Disable oneshot mode, width of first pulse = carrier period.

Return

- ESP_OK Success
- ESP_ERR_INVALID_ARG Parameter error

Parameters

- `mcpwm_num`: set MCPWM unit(0-1)
- `timer_num`: set timer number(0-2) of MCPWM, each MCPWM unit has 3 timers

esp_err_t **mcpwm_carrier_output_invert** (*mcpwm_unit_t mcpwm_num*, *mcpwm_timer_t timer_num*, *mcpwm_carrier_out_ivt_t carrier_ivt_mode*)

Enable or disable carrier output inversion.

Return

- ESP_OK Success
- ESP_ERR_INVALID_ARG Parameter error

Parameters

- `mcpwm_num`: set MCPWM unit(0-1)
- `timer_num`: set timer number(0-2) of MCPWM, each MCPWM unit has 3 timers
- `carrier_ivt_mode`: enable or disable carrier output inversion

esp_err_t **mcpwm_deadtime_enable** (*mcpwm_unit_t mcpwm_num*, *mcpwm_timer_t timer_num*, *mcpwm_deadtime_type_t dt_mode*, uint32_t *red*, uint32_t *fed*)

Enable and initialize deadtime for each MCPWM timer.

Return

- ESP_OK Success
- ESP_ERR_INVALID_ARG Parameter error

Parameters

- `mcpwm_num`: set MCPWM unit(0-1)
- `timer_num`: set timer number(0-2) of MCPWM, each MCPWM unit has 3 timers
- `dt_mode`: set deadtime mode
- `red`: set rising edge delay = red*100ns
- `fed`: set rising edge delay = fed*100ns

esp_err_t **mcpwm_deadtime_disable** (*mcpwm_unit_t mcpwm_num*, *mcpwm_timer_t timer_num*)

Disable deadtime on MCPWM timer.

Return

- ESP_OK Success
- ESP_ERR_INVALID_ARG Parameter error

Parameters

- `mcpwm_num`: set MCPWM unit(0-1)
- `timer_num`: set timer number(0-2) of MCPWM, each MCPWM unit has 3 timers

esp_err_t **mcpwm_fault_init** (*mcpwm_unit_t mcpwm_num*, *mcpwm_fault_input_level_t intput_level*, *mcpwm_fault_signal_t fault_sig*)

Initialize fault submodule, currently low level triggering is not supported.

Return

- ESP_OK Success
- ESP_ERR_INVALID_ARG Parameter error

Parameters

- `mcpwm_num`: set MCPWM unit(0-1)
- `intput_level`: set fault signal level, which will cause fault to occur
- `fault_sig`: set the fault pin, which needs to be enabled

esp_err_t **mcpwm_fault_set_oneshot_mode** (*mcpwm_unit_t mcpwm_num*, *mcpwm_timer_t timer_num*, *mcpwm_fault_signal_t fault_sig*, *mcpwm_output_action_t action_on_pwmxa*, *mcpwm_output_action_t action_on_pwmxb*)

Set oneshot mode on fault detection, once fault occur in oneshot mode reset is required to resume MCPWM signals.

Note currently low level triggering is not supported

Return

- ESP_OK Success

- ESP_ERR_INVALID_ARG Parameter error

Parameters

- `mcpwm_num`: set MCPWM unit(0-1)
- `timer_num`: set timer number(0-2) of MCPWM, each MCPWM unit has 3 timers
- `fault_sig`: set the fault pin, which needs to be enabled for oneshot mode
- `action_on_pwmxa`: action to be taken on MCPWMXA when fault occurs, either no change or high or low or toggle
- `action_on_pwmxb`: action to be taken on MCPWMXB when fault occurs, either no change or high or low or toggle

esp_err_t **mcpwm_fault_set_cyc_mode**(*mcpwm_unit_t mcpwm_num*, *mcpwm_timer_t timer_num*, *mcpwm_fault_signal_t fault_sig*, *mcpwm_output_action_t action_on_pwmxa*, *mcpwm_output_action_t action_on_pwmxb*)

Set cycle-by-cycle mode on fault detection, once fault occur in cyc mode MCPWM signal resumes as soon as fault signal becomes inactive.

Note currently low level triggering is not supported

Return

- ESP_OK Success
- ESP_ERR_INVALID_ARG Parameter error

Parameters

- `mcpwm_num`: set MCPWM unit(0-1)
- `timer_num`: set timer number(0-2) of MCPWM, each MCPWM unit has 3 timers
- `fault_sig`: set the fault pin, which needs to be enabled for cyc mode
- `action_on_pwmxa`: action to be taken on MCPWMXA when fault occurs, either no change or high or low or toggle
- `action_on_pwmxb`: action to be taken on MCPWMXB when fault occurs, either no change or high or low or toggle

esp_err_t **mcpwm_fault_deinit**(*mcpwm_unit_t mcpwm_num*, *mcpwm_fault_signal_t fault_sig*)

Disable fault signal.

Return

- ESP_OK Success
- ESP_ERR_INVALID_ARG Parameter error

Parameters

- `mcpwm_num`: set MCPWM unit(0-1)
- `fault_sig`: fault pin, which needs to be disabled

esp_err_t **mcpwm_capture_enable**(*mcpwm_unit_t mcpwm_num*, *mcpwm_capture_signal_t cap_sig*, *mcpwm_capture_on_edge_t cap_edge*, uint32_t *num_of_pulse*)

Initialize capture submodule.

Return

- ESP_OK Success
- ESP_ERR_INVALID_ARG Parameter error

Parameters

- `mcpwm_num`: set MCPWM unit(0-1)
- `cap_edge`: set capture edge, BIT(0) - negative edge, BIT(1) - positive edge
- `cap_sig`: capture pin, which needs to be enabled
- `num_of_pulse`: count time between rising/falling edge between 2 *(pulses mentioned), counter uses APB_CLK

esp_err_t **mcpwm_capture_disable**(*mcpwm_unit_t mcpwm_num*, *mcpwm_capture_signal_t cap_sig*)

Disable capture signal.

Return

- ESP_OK Success
- ESP_ERR_INVALID_ARG Parameter error

Parameters

- `mcpwm_num`: set MCPWM unit(0-1)

- `cap_sig`: capture pin, which needs to be disabled

uint32_t **mcpwm_capture_signal_get_value**(*mcpwm_unit_t mcpwm_num*, *mcpwm_capture_signal_t cap_sig*)

Get capture value.

Return Captured value

Parameters

- `mcpwm_num`: set MCPWM unit(0-1)
- `cap_sig`: capture pin on which value is to be measured

uint32_t **mcpwm_capture_signal_get_edge**(*mcpwm_unit_t mcpwm_num*, *mcpwm_capture_signal_t cap_sig*)

Get edge of capture signal.

Return Capture signal edge: 1 - positive edge, 2 - negtive edge

Parameters

- `mcpwm_num`: set MCPWM unit(0-1)
- `cap_sig`: capture pin of whose edge is to be determined

esp_err_t **mcpwm_sync_enable**(*mcpwm_unit_t mcpwm_num*, *mcpwm_timer_t timer_num*, *mcpwm_sync_signal_t sync_sig*, uint32_t *phase_val*)

Initialize sync submodule.

Return

- ESP_OK Success
- ESP_ERR_INVALID_ARG Parameter error

Parameters

- `mcpwm_num`: set MCPWM unit(0-1)
- `timer_num`: set timer number(0-2) of MCPWM, each MCPWM unit has 3 timers
- `sync_sig`: set the synchronization pin, which needs to be enabled
- `phase_val`: phase value in 1/1000 (for 86.7%, phase_val = 867) which timer moves to on sync signal

esp_err_t **mcpwm_sync_disable**(*mcpwm_unit_t mcpwm_num*, *mcpwm_timer_t timer_num*)

Disable sync submodule on given timer.

Return

- ESP_OK Success
- ESP_ERR_INVALID_ARG Parameter error

Parameters

- `mcpwm_num`: set MCPWM unit(0-1)
- `timer_num`: set timer number(0-2) of MCPWM, each MCPWM unit has 3 timers

esp_err_t **mcpwm_isr_register**(*mcpwm_unit_t mcpwm_num*, void (**fn*)) void *

, void **arg*, int *intr_alloc_flags*, *intr_handle_t* **handle*Register MCPWM interrupt handler, the handler is an ISR. the handler will be attached to the same CPU core that this function is running on.

Return

- ESP_OK Success
- ESP_ERR_INVALID_ARG Function pointer error.

Parameters

- `mcpwm_num`: set MCPWM unit(0-1)
- `fn`: interrupt handler function.
- `arg`: user-supplied argument passed to the handler function.
- `intr_alloc_flags`: flags used to allocate the interrupt. One or multiple (ORred) ESP_INTR_FLAG_* values. see esp_intr_alloc.h for more info.
- `handle`: pointer to return handle. If non-NULL, a handle for the interrupt will be returned here.

Structures

struct mcpwm_pin_config_t

MCPWM pin number for.

Public Members

int **mcpwm0a_out_num**
MCPWM0A out pin

int **mcpwm0b_out_num**
MCPWM0A out pin

int **mcpwm1a_out_num**
MCPWM0A out pin

int **mcpwm1b_out_num**
MCPWM0A out pin

int **mcpwm2a_out_num**
MCPWM0A out pin

int **mcpwm2b_out_num**
MCPWM0A out pin

int **mcpwm_sync0_in_num**
SYNC0 in pin

int **mcpwm_sync1_in_num**
SYNC1 in pin

int **mcpwm_sync2_in_num**
SYNC2 in pin

int **mcpwm_fault0_in_num**
FAULT0 in pin

int **mcpwm_fault1_in_num**
FAULT1 in pin

int **mcpwm_fault2_in_num**
FAULT2 in pin

int **mcpwm_cap0_in_num**
CAP0 in pin

int **mcpwm_cap1_in_num**
CAP1 in pin

int **mcpwm_cap2_in_num**
CAP2 in pin

struct mcpwm_config_t
MCPWM config structure.

Public Members

uint32_t **frequency**
Set frequency of MCPWM in Hz

float **cmpr_a**
Set % duty cycle for operator a(MCPWMXA), i.e for 62.3% duty cycle, duty_a = 62.3

float **cmpr_b**
Set % duty cycle for operator b(MCPWMXB), i.e for 48% duty cycle, duty_b = 48.0

mcpwm_duty_type_t **duty_mode**
Set type of duty cycle

mcpwm_counter_type_t **counter_mode**
Set type of MCPWM counter

struct mcpwm_carrier_config_t

MCPWM config carrier structure.

Public Members

uint8_t **carrier_period**

Set carrier period = (carrier_period + 1)*800ns, carrier_period should be < 16

uint8_t **carrier_duty**

Set carrier duty cycle, carrier_duty should be less than 8 (increment every 12.5%)

uint8_t **pulse_width_in_os**

Set pulse width of first pulse in one shot mode = (carrier period)*(pulse_width_in_os + 1), should be less then 16

mcpwm_carrier_os_t **carrier_os_mode**

Enable or disable carrier oneshot mode

mcpwm_carrier_out_ivt_t **carrier_ivt_mode**

Invert output of carrier

Macros

MCPWM_OPR_A

MCPWM_OPR_B

MCPWM_OPR_MAX

MCPWM_NO_CHANGE_IN_MCPWMXA

MCPWM_FORCE_MCPWMXA_LOW

MCPWM_FORCE_MCPWMXA_HIGH

MCPWM_TOG_MCPWMXA

MCPWM_NO_CHANGE_IN_MCPWMXB

MCPWM_FORCE_MCPWMXB_LOW

MCPWM_FORCE_MCPWMXB_HIGH

MCPWM_TOG_MCPWMXB

Type Definitions

typedef *mcpwm_generator_t* **mcpwm_operator_t**

typedef *mcpwm_output_action_t* **mcpwm_action_on_pwmxa_t**

typedef *mcpwm_output_action_t* **mcpwm_action_on_pwmxb_t**

Enumerations

enum mcpwm_io_signals_t

IO signals for the MCPWM.

- 6 MCPWM output pins that generate PWM signals
- 3 MCPWM fault input pins to detect faults like overcurrent, overvoltage, etc.
- 3 MCPWM sync input pins to synchronize MCPWM outputs signals
- 3 MCPWM capture input pins to gather feedback from controlled motors, using e.g. hall sensors

Values:

MCPWM0A = 0

PWM0A output pin

MCPWM0B
PWM0B output pin

MCPWM1A
PWM1A output pin

MCPWM1B
PWM1B output pin

MCPWM2A
PWM2A output pin

MCPWM2B
PWM2B output pin

MCPWM_SYNC_0
SYNC0 input pin

MCPWM_SYNC_1
SYNC1 input pin

MCPWM_SYNC_2
SYNC2 input pin

MCPWM_FAULT_0
FAULT0 input pin

MCPWM_FAULT_1
FAULT1 input pin

MCPWM_FAULT_2
FAULT2 input pin

MCPWM_CAP_0 = 84
CAP0 input pin

MCPWM_CAP_1
CAP1 input pin

MCPWM_CAP_2
CAP2 input pin

enum mcpwm_unit_t
Select MCPWM unit.

Values:

MCPWM_UNIT_0 = 0
MCPWM unit0 selected

MCPWM_UNIT_1
MCPWM unit1 selected

MCPWM_UNIT_MAX
Num of MCPWM units on ESP32

enum mcpwm_timer_t
Select MCPWM timer.

Values:

MCPWM_TIMER_0 = 0
Select MCPWM timer0

MCPWM_TIMER_1
Select MCPWM timer1

MCPWM_TIMER_2
Select MCPWM timer2

MCPWM_TIMER_MAX
Num of MCPWM timers on ESP32

enum mcpwm_generator_t
Select MCPWM operator.

Values:

MCPWM_GEN_A = 0
Select MCPWMXA, where ‘X’ is operator number

MCPWM_GEN_B
Select MCPWMXB, where ‘X’ is operator number

MCPWM_GEN_MAX
Num of generators to each operator of MCPWM

enum mcpwm_carrier_os_t
MCPWM carrier oneshot mode, in this mode the width of the first pulse of carrier can be programmed.

Values:

MCPWM_ONESHOT_MODE_DIS = 0
Enable oneshot mode

MCPWM_ONESHOT_MODE_EN
Disable oneshot mode

enum mcpwm_carrier_out_ivt_t
MCPWM carrier output inversion, high frequency carrier signal active with MCPWM signal is high.

Values:

MCPWM_CARRIER_OUT_IVT_DIS = 0
Enable carrier output inversion

MCPWM_CARRIER_OUT_IVT_EN
Disable carrier output inversion

enum mcpwm_fault_signal_t
MCPWM select fault signal input.

Values:

MCPWM_SELECT_F0 = 0
Select F0 as input

MCPWM_SELECT_F1
Select F1 as input

MCPWM_SELECT_F2
Select F2 as input

enum mcpwm_fault_input_level_t
MCPWM select triggering level of fault signal.

Values:

MCPWM_LOW_LEVEL_TGR = 0
Fault condition occurs when fault input signal goes from high to low, currently not supported

MCPWM_HIGH_LEVEL_TGR
Fault condition occurs when fault input signal goes low to high

enum mcpwm_capture_signal_t
MCPWM select capture signal input.

Values:

MCPWM_SELECT_CAP0 = 0
Select CAP0 as input

MCPWM_SELECT_CAP1
Select CAP1 as input

MCPWM_SELECT_CAP2
Select CAP2 as input

2.3.9 Pulse Counter

Introduction

The PCNT (Pulse Counter) module is designed to count the number of rising and/or falling edges of an input signal. Each pulse counter unit has a 16-bit signed counter register and two channels that can be configured to either increment or decrement the counter. Each channel has a signal input that accepts signal edges to be detected, as well as a control input that can be used to enable or disable the signal input. The inputs have optional filters that can be used to discard unwanted glitches in the signal.

Functionality Overview

Description of functionality of this API has been broken down into four sections:

- *Configuration* - describes counter's configuration parameters and how to setup the counter.
- *Operating the Counter* - provides information on control functions to pause, measure and clear the counter.
- *Filtering Pulses* - describes options to filtering pulses and the counter control signals.
- *Using Interrupts* - presents how to trigger interrupts on specific states of the counter.

Configuration

The PCNT module has 8 independent counting "units" numbered from 0 to 7. In the API they are referred to using *pcnt_unit_t*. Each unit has two independent channels numbered as 0 and 1 and specified with *pcnt_channel_t*.

The configuration is provided separately per unit's channel using *pcnt_config_t* and covers:

- The unit and the channel number this configuration refers to.
- GPIO numbers of the pulse input and the pulse gate input.
- Two pairs of parameters: *pcnt_ctrl_mode_t* and *pcnt_count_mode_t* to define how the counter reacts depending on the the status of control signal and how counting is done positive / negative edge of the pulses.
- Two limit values (minimum / maximum) that are used to establish watchpoints and trigger interrupts when the pulse count is meeting particular limit.

Setting up of particular channel is then done by calling a function *pcnt_unit_config()* with above *pcnt_config_t* as the input parameter.

To disable the pulse or the control input pin in configuration, provide `PCNT_PIN_NOT_USED` instead of the GPIO number.

Operating the Counter

After doing setup with *pcnt_unit_config()*, the counter immediately starts to operate. The accumulated pulse count can be checked by calling *pcnt_get_counter_value()*.

There are couple of functions that allow to control the counter's operation: *pcnt_counter_pause()*, *pcnt_counter_resume()* and *pcnt_counter_clear()*

It is also possible to dynamically change the previously set up counter modes with *pcnt_unit_config()* by calling *pcnt_set_mode()*.

If desired, the pulse input pin and the control input pin may be changed "on the fly" using *pcnt_set_pin()*. To disable particular input provide as a function parameter PCNT_PIN_NOT_USED instead of the GPIO number.

注解: For the counter not to miss any pulses, the pulse duration should be longer than one APB_CLK cycle (12.5 ns). The pulses are sampled on the edges of the APB_CLK clock and may be missed, if fall between the edges. This applies to counter operation with or without a *filer*.

Filtering Pulses

The PCNT unit features filters on each of the pulse and control inputs, adding the option to ignore short glitches in the signals.

The length of ignored pulses is provided in APB_CLK clock cycles by calling *pcnt_set_filter_value()*. The current filter setting may be checked with *pcnt_get_filter_value()*. The APB_CLK clock is running at 80 MHz.

The filter is put into operation / suspended by calling *pcnt_filter_enable()* / *pcnt_filter_disable()*.

Using Interrupts

There are five counter state watch events, defined in *pcnt_evt_type_t*, that are able to trigger an interrupt. The event happens on the pulse counter reaching specific values:

- Minimum or maximum count values: counter_l_lim or counter_h_lim provided in *pcnt_config_t* as discussed in *Configuration*
- Threshold 0 or Threshold 1 values set using function *pcnt_set_event_value()*.
- Pulse count = 0

To register, enable or disable an interrupt to service the above events, call *pcnt_isr_register()*, *pcnt_intr_enable()*. and *pcnt_intr_disable()*. To enable or disable events on reaching threshold values, you will also need to call functions *pcnt_event_enable()* and *pcnt_event_disable()*.

In order to check what are the threshold values currently set, use function *pcnt_get_event_value()*.

Application Example

- Pulse counter with control signal and event interrupt example: peripherals/pcnt/pulse_count_event.
- Parse the signal generated from rotary encoder: peripherals/pcnt/rotary_encoder.

API Reference

Header File

- driver/include/driver/pcnt.h

Functions

esp_err_t **pcnt_unit_config**(**const** *pcnt_config_t* **pcnt_config*)

Configure Pulse Counter unit.

Note This function will disable three events: PCNT_EVT_L_LIM, PCNT_EVT_H_LIM, PCNT_EVT_ZERO.

Return

- ESP_OK Success
- ESP_ERR_INVALID_STATE pcnt driver already initialized
- ESP_ERR_INVALID_ARG Parameter error

Parameters

- `pcnt_config`: Pointer of Pulse Counter unit configure parameter

esp_err_t **pcnt_get_counter_value**(*pcnt_unit_t pcnt_unit*, int16_t **count*)

Get pulse counter value.

Return

- ESP_OK Success
- ESP_ERR_INVALID_STATE pcnt driver has not been initialized
- ESP_ERR_INVALID_ARG Parameter error

Parameters

- `pcnt_unit`: Pulse Counter unit number
- `count`: Pointer to accept counter value

esp_err_t **pcnt_counter_pause**(*pcnt_unit_t pcnt_unit*)

Pause PCNT counter of PCNT unit.

Return

- ESP_OK Success
- ESP_ERR_INVALID_STATE pcnt driver has not been initialized
- ESP_ERR_INVALID_ARG Parameter error

Parameters

- `pcnt_unit`: PCNT unit number

esp_err_t **pcnt_counter_resume**(*pcnt_unit_t pcnt_unit*)

Resume counting for PCNT counter.

Return

- ESP_OK Success
- ESP_ERR_INVALID_STATE pcnt driver has not been initialized
- ESP_ERR_INVALID_ARG Parameter error

Parameters

- `pcnt_unit`: PCNT unit number, select from pcnt_unit_t

esp_err_t **pcnt_counter_clear**(*pcnt_unit_t pcnt_unit*)

Clear and reset PCNT counter value to zero.

Return

- ESP_OK Success
- ESP_ERR_INVALID_STATE pcnt driver has not been initialized
- ESP_ERR_INVALID_ARG Parameter error

Parameters

- `pcnt_unit`: PCNT unit number, select from pcnt_unit_t

esp_err_t **pcnt_intr_enable**(*pcnt_unit_t pcnt_unit*)

Enable PCNT interrupt for PCNT unit.

Note Each Pulse counter unit has five watch point events that share the same interrupt. Configure events with pcnt_event_enable() and pcnt_event_disable()

Return

- ESP_OK Success
- ESP_ERR_INVALID_STATE pcnt driver has not been initialized
- ESP_ERR_INVALID_ARG Parameter error

Parameters

- `pcnt_unit`: PCNT unit number

esp_err_t **pcnt_intr_disable**(*pcnt_unit_t pcnt_unit*)

Disable PCNT interrupt for PCNT unit.

Return

- ESP_OK Success
- ESP_ERR_INVALID_STATE pcnt driver has not been initialized
- ESP_ERR_INVALID_ARG Parameter error

Parameters

- `pcnt_unit`: PCNT unit number

esp_err_t **pcnt_event_enable** (*pcnt_unit_t unit*, *pcnt_evt_type_t evt_type*)
Enable PCNT event of PCNT unit.

Return
- ESP_OK Success
- ESP_ERR_INVALID_STATE pcnt driver has not been initialized
- ESP_ERR_INVALID_ARG Parameter error

Parameters
- `unit`: PCNT unit number
- `evt_type`: Watch point event type. All enabled events share the same interrupt (one interrupt per pulse counter unit).

esp_err_t **pcnt_event_disable** (*pcnt_unit_t unit*, *pcnt_evt_type_t evt_type*)
Disable PCNT event of PCNT unit.

Return
- ESP_OK Success
- ESP_ERR_INVALID_STATE pcnt driver has not been initialized
- ESP_ERR_INVALID_ARG Parameter error

Parameters
- `unit`: PCNT unit number
- `evt_type`: Watch point event type. All enabled events share the same interrupt (one interrupt per pulse counter unit).

esp_err_t **pcnt_set_event_value** (*pcnt_unit_t unit*, *pcnt_evt_type_t evt_type*, int16_t *value*)
Set PCNT event value of PCNT unit.

Return
- ESP_OK Success
- ESP_ERR_INVALID_STATE pcnt driver has not been initialized
- ESP_ERR_INVALID_ARG Parameter error

Parameters
- `unit`: PCNT unit number
- `evt_type`: Watch point event type. All enabled events share the same interrupt (one interrupt per pulse counter unit).
- `value`: Counter value for PCNT event

esp_err_t **pcnt_get_event_value** (*pcnt_unit_t unit*, *pcnt_evt_type_t evt_type*, int16_t **value*)
Get PCNT event value of PCNT unit.

Return
- ESP_OK Success
- ESP_ERR_INVALID_STATE pcnt driver has not been initialized
- ESP_ERR_INVALID_ARG Parameter error

Parameters
- `unit`: PCNT unit number
- `evt_type`: Watch point event type. All enabled events share the same interrupt (one interrupt per pulse counter unit).
- `value`: Pointer to accept counter value for PCNT event

esp_err_t **pcnt_get_event_status** (*pcnt_unit_t unit*, uint32_t **status*)
Get PCNT event status of PCNT unit.

Return

```
- ESP_OK Success
- ESP_ERR_INVALID_STATE pcnt driver has not been initialized
- ESP_ERR_INVALID_ARG Parameter error
```

Parameters
- `unit`: PCNT unit number
- `status`: Pointer to accept event status word

esp_err_t **pcnt_isr_unregister**(*pcnt_isr_handle_t handle*)

Unregister PCNT interrupt handler (registered by pcnt_isr_register), the handler is an ISR. The handler will be attached to the same CPU core that this function is running on. If the interrupt service is registered by pcnt_isr_service_install, please call pcnt_isr_service_uninstall instead.

Return

- ESP_OK Success
- ESP_ERR_NOT_FOUND Can not find the interrupt that matches the flags.
- ESP_ERR_INVALID_ARG Function pointer error.

Parameters

- `handle`: handle to unregister the ISR service.

esp_err_t **pcnt_isr_register**(void (**fn*)) void *
, void **arg*, int *intr_alloc_flags*, *pcnt_isr_handle_t* **handle*Register PCNT interrupt handler, the handler is an ISR. The handler will be attached to the same CPU core that this function is running on. Please do not use pcnt_isr_service_install if this function was called.

Return

- ESP_OK Success
- ESP_ERR_NOT_FOUND Can not find the interrupt that matches the flags.
- ESP_ERR_INVALID_ARG Function pointer error.

Parameters

- `fn`: Interrupt handler function.
- `arg`: Parameter for handler function
- `intr_alloc_flags`: Flags used to allocate the interrupt. One or multiple (ORred) ESP_INTR_FLAG_* values. See esp_intr_alloc.h for more info.
- `handle`: Pointer to return handle. If non-NULL, a handle for the interrupt will be returned here. Calling pcnt_isr_unregister to unregister this ISR service if needed, but only if the handle is not NULL.

esp_err_t **pcnt_set_pin**(*pcnt_unit_t unit*, *pcnt_channel_t channel*, int *pulse_io*, int *ctrl_io*)

Configure PCNT pulse signal input pin and control input pin.

Note Set the signal input to PCNT_PIN_NOT_USED if unused.

Return

- ESP_OK Success
- ESP_ERR_INVALID_STATE pcnt driver has not been initialized
- ESP_ERR_INVALID_ARG Parameter error

Parameters

- `unit`: PCNT unit number
- `channel`: PCNT channel number
- `pulse_io`: Pulse signal input GPIO
- `ctrl_io`: Control signal input GPIO

esp_err_t **pcnt_filter_enable**(*pcnt_unit_t unit*)

Enable PCNT input filter.

Return

- ESP_OK Success
- ESP_ERR_INVALID_STATE pcnt driver has not been initialized
- ESP_ERR_INVALID_ARG Parameter error

Parameters

- `unit`: PCNT unit number

esp_err_t **pcnt_filter_disable**(*pcnt_unit_t unit*)

Disable PCNT input filter.

Return

- ESP_OK Success
- ESP_ERR_INVALID_STATE pcnt driver has not been initialized
- ESP_ERR_INVALID_ARG Parameter error

Parameters

- `unit`: PCNT unit number

esp_err_t **pcnt_set_filter_value** (*pcnt_unit_t unit*, uint16_t *filter_val*)
Set PCNT filter value.

Note filter_val is a 10-bit value, so the maximum filter_val should be limited to 1023.

Return
- ESP_OK Success
- ESP_ERR_INVALID_STATE pcnt driver has not been initialized
- ESP_ERR_INVALID_ARG Parameter error

Parameters
- `unit`: PCNT unit number
- `filter_val`: PCNT signal filter value, counter in APB_CLK cycles. Any pulses lasting shorter than this will be ignored when the filter is enabled.

esp_err_t **pcnt_get_filter_value** (*pcnt_unit_t unit*, uint16_t **filter_val*)
Get PCNT filter value.

Return
- ESP_OK Success
- ESP_ERR_INVALID_STATE pcnt driver has not been initialized
- ESP_ERR_INVALID_ARG Parameter error

Parameters
- `unit`: PCNT unit number
- `filter_val`: Pointer to accept PCNT filter value.

esp_err_t **pcnt_set_mode** (*pcnt_unit_t unit*, *pcnt_channel_t channel*, *pcnt_count_mode_t pos_mode*, *pcnt_count_mode_t neg_mode*, *pcnt_ctrl_mode_t hctrl_mode*, *pcnt_ctrl_mode_t lctrl_mode*)
Set PCNT counter mode.

Return
- ESP_OK Success
- ESP_ERR_INVALID_STATE pcnt driver has not been initialized
- ESP_ERR_INVALID_ARG Parameter error

Parameters
- `unit`: PCNT unit number
- `channel`: PCNT channel number
- `pos_mode`: Counter mode when detecting positive edge
- `neg_mode`: Counter mode when detecting negative edge
- `hctrl_mode`: Counter mode when control signal is high level
- `lctrl_mode`: Counter mode when control signal is low level

esp_err_t **pcnt_isr_handler_add** (*pcnt_unit_t unit*, void (**isr_handler*)) void *
, void **args*Add ISR handler for specified unit.

Call this function after using pcnt_isr_service_install() to install the PCNT driver' s ISR handler service.

The ISR handlers do not need to be declared with IRAM_ATTR, unless you pass the ESP_INTR_FLAG_IRAM flag when allocating the ISR in pcnt_isr_service_install().

This ISR handler will be called from an ISR. So there is a stack size limit (configurable as "ISR stack size" in menuconfig). This limit is smaller compared to a global PCNT interrupt handler due to the additional level of indirection.

Return
- ESP_OK Success
- ESP_ERR_INVALID_STATE pcnt driver has not been initialized
- ESP_ERR_INVALID_ARG Parameter error

Parameters
- `unit`: PCNT unit number
- `isr_handler`: Interrupt handler function.
- `args`: Parameter for handler function

esp_err_t **pcnt_isr_service_install** (int *intr_alloc_flags*)
Install PCNT ISR service.

Note We can manage different interrupt service for each unit. This function will use the default ISR handle service, Calling pcnt_isr_service_uninstall to uninstall the default service if needed. Please do not use pcnt_isr_register if this function was called.

Return

- ESP_OK Success
- ESP_ERR_INVALID_STATE pcnt driver has not been initialized
- ESP_ERR_NO_MEM No memory to install this service
- ESP_ERR_INVALID_STATE ISR service already installed

Parameters

- `intr_alloc_flags`: Flags used to allocate the interrupt. One or multiple (ORred) ESP_INTR_FLAG_* values. See esp_intr_alloc.h for more info.

void **pcnt_isr_service_uninstall**(void)

Uninstall PCNT ISR service, freeing related resources.

esp_err_t **pcnt_isr_handler_remove**(*pcnt_unit_t unit*)

Delete ISR handler for specified unit.

Return

- ESP_OK Success
- ESP_ERR_INVALID_STATE pcnt driver has not been initialized
- ESP_ERR_INVALID_ARG Parameter error

Parameters

- `unit`: PCNT unit number

Type Definitions

typedef *intr_handle_t* **pcnt_isr_handle_t**

Header File

- hal/include/hal/pcnt_types.h

Structures

struct pcnt_config_t

Pulse Counter configuration for a single channel.

Public Members

int **pulse_gpio_num**

Pulse input GPIO number, if you want to use GPIO16, enter pulse_gpio_num = 16, a negative value will be ignored

int **ctrl_gpio_num**

Control signal input GPIO number, a negative value will be ignored

pcnt_ctrl_mode_t **lctrl_mode**

PCNT low control mode

pcnt_ctrl_mode_t **hctrl_mode**

PCNT high control mode

pcnt_count_mode_t **pos_mode**

PCNT positive edge count mode

pcnt_count_mode_t **neg_mode**

PCNT negative edge count mode

int16_t **counter_h_lim**

Maximum counter value

int16_t **counter_l_lim**
Minimum counter value

pcnt_unit_t **unit**
PCNT unit number

pcnt_channel_t **channel**
the PCNT channel

Macros

PCNT_PIN_NOT_USED
When selected for a pin, this pin will not be used

Enumerations

enum pcnt_port_t
PCNT port number, the max port number is (PCNT_PORT_MAX - 1).

Values:

PCNT_PORT_0 = 0
PCNT port 0

PCNT_PORT_MAX
PCNT port max

enum pcnt_unit_t
Selection of all available PCNT units.

Values:

PCNT_UNIT_0 = 0
PCNT unit 0

PCNT_UNIT_1 = 1
PCNT unit 1

PCNT_UNIT_2 = 2
PCNT unit 2

PCNT_UNIT_3 = 3
PCNT unit 3

PCNT_UNIT_4 = 4
PCNT unit 4

PCNT_UNIT_5 = 5
PCNT unit 5

PCNT_UNIT_6 = 6
PCNT unit 6

PCNT_UNIT_7 = 7
PCNT unit 7

PCNT_UNIT_MAX

enum pcnt_ctrl_mode_t
Selection of available modes that determine the counter's action depending on the state of the control signal's input GPIO.

Note Configuration covers two actions, one for high, and one for low level on the control input

Values:

PCNT_MODE_KEEP = 0
Control mode: won't change counter mode

PCNT_MODE_REVERSE = 1
Control mode: invert counter mode(increase -> decrease, decrease -> increase)

PCNT_MODE_DISABLE = 2
Control mode: Inhibit counter(counter value will not change in this condition)

PCNT_MODE_MAX

enum pcnt_count_mode_t
Selection of available modes that determine the counter's action on the edge of the pulse signal's input GPIO.

Note Configuration covers two actions, one for positive, and one for negative edge on the pulse input

Values:

PCNT_COUNT_DIS = 0
Counter mode: Inhibit counter(counter value will not change in this condition)

PCNT_COUNT_INC = 1
Counter mode: Increase counter value

PCNT_COUNT_DEC = 2
Counter mode: Decrease counter value

PCNT_COUNT_MAX

enum pcnt_channel_t
Selection of channels available for a single PCNT unit.

Values:

PCNT_CHANNEL_0 = 0x00
PCNT channel 0

PCNT_CHANNEL_1 = 0x01
PCNT channel 1

PCNT_CHANNEL_MAX

enum pcnt_evt_type_t
Selection of counter's events the may trigger an interrupt.

Values:

PCNT_EVT_THRES_1 = BIT(2)
PCNT watch point event: threshold1 value event

PCNT_EVT_THRES_0 = BIT(3)
PCNT watch point event: threshold0 value event

PCNT_EVT_L_LIM = BIT(4)
PCNT watch point event: Minimum counter value

PCNT_EVT_H_LIM = BIT(5)
PCNT watch point event: Maximum counter value

PCNT_EVT_ZERO = BIT(6)
PCNT watch point event: counter value zero event

PCNT_EVT_MAX

2.3.10 RMT

The RMT (Remote Control) module driver can be used to send and receive infrared remote control signals. Due to flexibility of RMT module, the driver can also be used to generate or receive many other types of signals.

The signal, which consists of a series of pulses, is generated by RMT's transmitter based on a list of values. The values define the pulse duration and a binary level, see below. The transmitter can also provide a carrier and modulate it with provided pulses.

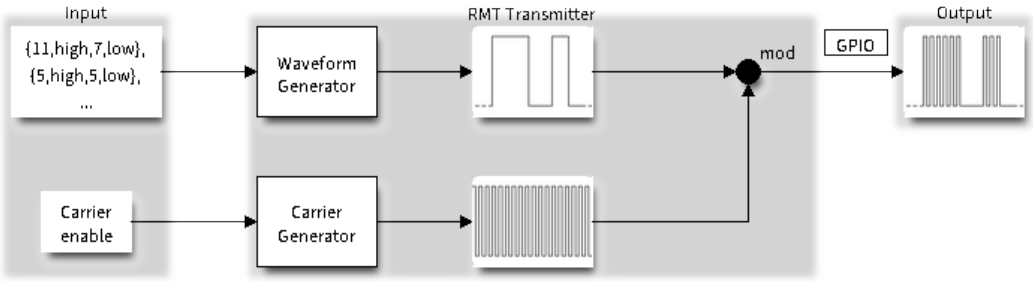

图 14: RMT Transmitter Overview

The reverse operation is performed by the receiver, where a series of pulses is decoded into a list of values containing the pulse duration and binary level. A filter may be applied to remove high frequency noise from the input signal.

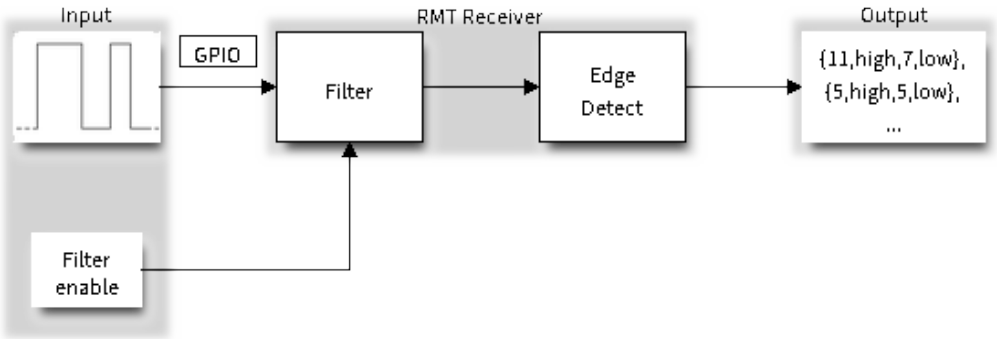

图 15: RMT Receiver Overview

There couple of typical steps to setup and operate the RMT and they are discussed in the following sections:

1. *Configure Driver*
2. *Transmit Data* or *Receive Data*
3. *Change Operation Parameters*
4. *Use Interrupts*

The RMT has eight channels numbered from zero to seven. Each channel is able to independently transmit or receive data. They are referred to using indexes defined in structure `rmt_channel_t`.

Configure Driver

There are several parameters that define how particular channel operates. Most of these parameters are configured by setting specific members of `rmt_config_t` structure. Some of the parameters are common to both transmit or receive mode, and some are mode specific. They are all discussed below.

Common Parameters

- The **channel** to be configured, select one from the `rmt_channel_t` enumerator.
- The RMT **operation mode** - whether this channel is used to transmit or receive data, selected by setting a **rmt_mode** members to one of the values from `rmt_mode_t`.
- What is the **pin number** to transmit or receive RMT signals, selected by setting **gpio_num**.
- How many **memory blocks** will be used by the channel, set with **mem_block_num**.
- Extra miscellaneous parameters for the channel can be set in the **flags**.

  - When **RMT_CHANNEL_FLAGS_AWARE_DFS** is set, RMT channel will take REF_TICK or XTAL as source clock. The benefit is, RMT channel can continue work even when APB clock is changing. See *power_management* for more information.
- A **clock divider**, that will determine the range of pulse length generated by the RMT transmitter or discriminated by the receiver. Selected by setting **clk_div** to a value within [1 .. 255] range. The RMT source clock is typically APB CLK, 80Mhz by default. But when **RMT_CHANNEL_FLAGS_AWARE_DFS** is set in **flags**, RMT source clock is changed to REF_TICK or XTAL.

注解: The period of a square wave after the clock divider is called a ‘tick’. The length of the pulses generated by the RMT transmitter or discriminated by the receiver is configured in number of ‘ticks’.

There are also couple of specific parameters that should be set up depending if selected channel is configured in *Transmit Mode* or *Receive Mode*:

Transmit Mode When configuring channel in transmit mode, set **tx_config** and the following members of *rmt_tx_config_t*:

- Transmit the currently configured data items in a loop - **loop_en**
- Enable the RMT carrier signal - **carrier_en**
- Frequency of the carrier in Hz - **carrier_freq_hz**
- Duty cycle of the carrier signal in percent (%) - **carrier_duty_percent**
- Level of the RMT output, when the carrier is applied - **carrier_level**
- Enable the RMT output if idle - **idle_output_en**
- Set the signal level on the RMT output if idle - **idle_level**

Receive Mode In receive mode, set **rx_config** and the following members of *rmt_rx_config_t*:

- Enable a filter on the input of the RMT receiver - **filter_en**
- A threshold of the filter, set in the number of ticks - **filter_ticks_thresh**. Pulses shorter than this setting will be filtered out. Note, that the range of entered tick values is [0..255].
- A pulse length threshold that will turn the RMT receiver idle, set in number of ticks - **idle_threshold**. The receiver will ignore pulses longer than this setting.

Finalize Configuration Once the *rmt_config_t* structure is populated with parameters, it should be then invoked with *rmt_config()* to make the configuration effective.

The last configuration step is installation of the driver in memory by calling *rmt_driver_install()*. If `rx_buf_size` parameter of this function is > 0, then a ring buffer for incoming data will be allocated. A default ISR handler will be installed, see a note in *Use Interrupts*.

Now, depending on how the channel is configured, we are ready to either *Transmit Data* or *Receive Data*. This is described in next two sections.

Transmit Data

Before being able to transmit some RMT pulses, we need to define the pulse pattern. The minimum pattern recognized by the RMT controller, later called an ‘item’, is provided in a structure `rmt_item32_t`. Each item consists of two pairs of two values. The first value in a pair describes the signal duration in ticks and is 15 bits long, the second provides the signal level (high or low) and is contained in a single bit. A block of couple of items and the structure of an item is presented below.

For a simple example how to define a block of items see peripherals/rmt/morse_code.

The items are provided to the RMT controller by calling function *rmt_write_items()*. This function also automatically triggers start of transmission. It may be called to wait for transmission completion or exit just after transmission start. In such case you can wait for the transmission end by calling *rmt_wait_tx_done()*. This

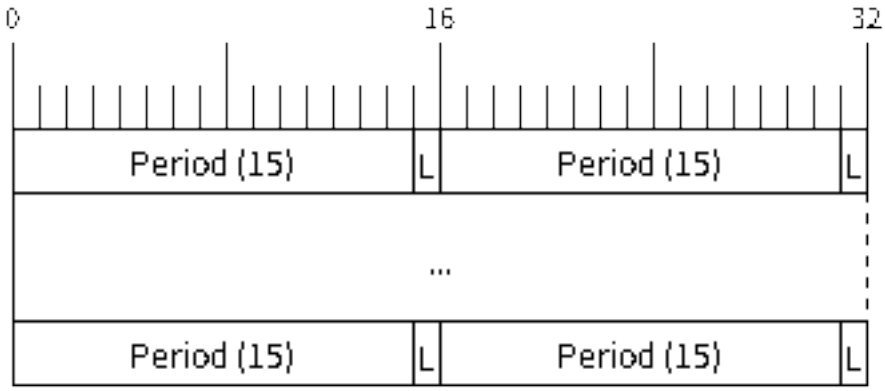

图 16: Structure of RMT items (L - signal level)

function does not limit the number of data items to transmit. It is using an interrupt to successively copy the new data chunks to RMT's internal memory as previously provided data are sent out.

Another way to provide data for transmission is by calling *rmt_fill_tx_items()*. In this case transmission is not started automatically. To control the transmission process use *rmt_tx_start()* and *rmt_tx_stop()*. The number of items to sent is restricted by the size of memory blocks allocated in the RMT controller's internal memory, see *rmt_set_mem_block_num()*.

Receive Data

Before starting the receiver we need some storage for incoming items. The RMT controller has 512 x 32-bits of internal RAM shared between all eight channels.

In typical scenarios it is not enough as an ultimate storage for all incoming (and outgoing) items. Therefore this API supports retrieval of incoming items on the fly to save them in a ring buffer of a size defined by the user. The size is provided when calling *rmt_driver_install()* discussed above. To get a handle to this buffer call *rmt_get_ringbuf_handle()*.

With the above steps complete we can start the receiver by calling *rmt_rx_start()* and then move to checking what's inside the buffer. To do so, you can use common FreeRTOS functions that interact with the ring buffer. Please see an example how to do it in peripherals/rmt/ir_protocols.

To stop the receiver, call *rmt_rx_stop()*.

Change Operation Parameters

Previously described function *rmt_config()* provides a convenient way to set several configuration parameters in one shot. This is usually done on application start. Then, when the application is running, the API provides an alternate way to update individual parameters by calling dedicated functions. Each function refers to the specific RMT channel provided as the first input parameter. Most of the functions have *_get_* counterpart to read back the currently configured value.

Parameters Common to Transmit and Receive Mode

- Selection of a GPIO pin number on the input or output of the RMT - *rmt_set_pin()*
- Number of memory blocks allocated for the incoming or outgoing data - *rmt_set_mem_pd()*
- Setting of the clock divider - *rmt_set_clk_div()*

- Selection of the clock source, note that currently one clock source is supported, the APB clock which is 80Mhz - *rmt_set_source_clk()*

Transmit Mode Parameters

- Enable or disable the loop back mode for the transmitter - *rmt_set_tx_loop_mode()*
- Binary level on the output to apply the carrier - *rmt_set_tx_carrier()*, selected from *rmt_carrier_level_t*
- Determines the binary level on the output when transmitter is idle - *rmt_set_idle_level()*, selected from *rmt_idle_level_t*

Receive Mode Parameters

- The filter setting - *rmt_set_rx_filter()*
- The receiver threshold setting - *rmt_set_rx_idle_thresh()*
- Whether the transmitter or receiver is entitled to access RMT's memory - *rmt_set_memory_owner()*, selection is from *rmt_mem_owner_t*.

Use Interrupts

Registering of an interrupt handler for the RMT controller is done be calling *rmt_isr_register()*.

注解: When calling *rmt_driver_install()* to use the system RMT driver, a default ISR is being installed. In such a case you cannot register a generic ISR handler with *rmt_isr_register()*.

The RMT controller triggers interrupts on four specific events describes below. To enable interrupts on these events, the following functions are provided:

- The RMT receiver has finished receiving a signal - *rmt_set_rx_intr_en()*
- The RMT transmitter has finished transmitting the signal - *rmt_set_tx_intr_en()*
- The number of events the transmitter has sent matches a threshold value *rmt_set_tx_thr_intr_en()*
- Ownership to the RMT memory block has been violated - *rmt_set_err_intr_en()*

Setting or clearing an interrupt enable mask for specific channels and events may be also done by calling *rmt_set_intr_enable_mask()* or *rmt_clr_intr_enable_mask()*.

When servicing an interrupt within an ISR, the interrupt need to explicitly cleared. To do so, set specific bits described as `RMT.int_clr.val.chN_event_name` and defined as a `volatile struct` in soc/esp32/include/soc/rmt_struct.h, where N is the RMT channel number [0, n] and the `event_name` is one of four events described above.

If you do not need an ISR anymore, you can deregister it by calling a function *rmt_isr_deregister()*.

警告: It's not recommended for users to register an interrupt handler in their applications. RMT driver is highly dependent on interrupt, especially when doing transaction in a ping-pong way, so the driver itself has registered a default handler called `rmt_driver_isr_default`. Instead, if what you want is to get a notification when transaction is done, go ahead with *rmt_register_tx_end_callback()*.

Uninstall Driver

If the RMT driver has been installed with *rmt_driver_install()* for some specific period of time and then not required, the driver may be removed to free allocated resources by calling *rmt_driver_uninstall()*.

Application Examples

- Using RMT to send morse code: peripherals/rmt/morse_code.
- Using RMT to drive RGB LED strip: peripherals/rmt/led_strip.
- NEC remote control TX and RX example: peripherals/rmt/ir_protocols.
- Musical buzzer example: peripherals/rmt/musical_buzzer.

API Reference

Header File

- driver/include/driver/rmt.h

Functions

esp_err_t **rmt_set_clk_div** (*rmt_channel_t channel*, uint8_t *div_cnt*)

Set RMT clock divider, channel clock is divided from source clock.

Return

- ESP_ERR_INVALID_ARG Parameter error
- ESP_OK Success

Parameters

- `channel`: RMT channel
- `div_cnt`: RMT counter clock divider

esp_err_t **rmt_get_clk_div** (*rmt_channel_t channel*, uint8_t **div_cnt*)

Get RMT clock divider, channel clock is divided from source clock.

Return

- ESP_ERR_INVALID_ARG Parameter error
- ESP_OK Success

Parameters

- `channel`: RMT channel
- `div_cnt`: pointer to accept RMT counter divider

esp_err_t **rmt_set_rx_idle_thresh** (*rmt_channel_t channel*, uint16_t *thresh*)

Set RMT RX idle threshold value.

In receive mode, when no edge is detected on the input signal for longer than idle_thres channel clock cycles, the receive process is finished.

Return

- ESP_ERR_INVALID_ARG Parameter error
- ESP_OK Success

Parameters

- `channel`: RMT channel
- `thresh`: RMT RX idle threshold

esp_err_t **rmt_get_rx_idle_thresh** (*rmt_channel_t channel*, uint16_t **thresh*)

Get RMT idle threshold value.

In receive mode, when no edge is detected on the input signal for longer than idle_thres channel clock cycles, the receive process is finished.

Return

- ESP_ERR_INVALID_ARG Parameter error
- ESP_OK Success

Parameters

- `channel`: RMT channel
- `thresh`: pointer to accept RMT RX idle threshold value

esp_err_t **rmt_set_mem_block_num** (*rmt_channel_t channel*, uint8_t *rmt_mem_num*)

Set RMT memory block number for RMT channel.

This function is used to configure the amount of memory blocks allocated to channel n The 8 channels share a 512x32-bit RAM block which can be read and written by the processor cores over the APB bus, as well as read by the transmitters and written by the receivers.

The RAM address range for channel n is start_addr_CHn to end_addr_CHn, which are defined by: Memory block start address is RMT_CHANNEL_MEM(n) (in soc/rmt_reg.h), that is, start_addr_chn = RMT base address + 0x800 + 64 * 4 * n, and end_addr_chn = RMT base address + 0x800 + 64 * 4 * n + 64 * 4 * RMT_MEM_SIZE_CHn mod 512 * 4

Note If memory block number of one channel is set to a value greater than 1, this channel will occupy the memory block of the next channel. Channel 0 can use at most 8 blocks of memory, accordingly channel 7 can only use one memory block.

Return

- ESP_ERR_INVALID_ARG Parameter error
- ESP_OK Success

Parameters

- `channel`: RMT channel
- `rmt_mem_num`: RMT RX memory block number, one block has 64 * 32 bits.

esp_err_t **rmt_get_mem_block_num** (*rmt_channel_t channel*, uint8_t **rmt_mem_num*)

Get RMT memory block number.

Return

- ESP_ERR_INVALID_ARG Parameter error
- ESP_OK Success

Parameters

- `channel`: RMT channel
- `rmt_mem_num`: Pointer to accept RMT RX memory block number

esp_err_t **rmt_set_tx_carrier** (*rmt_channel_t channel*, bool *carrier_en*, uint16_t *high_level*, uint16_t *low_level*, *rmt_carrier_level_t carrier_level*)

Configure RMT carrier for TX signal.

Set different values for carrier_high and carrier_low to set different frequency of carrier. The unit of carrier_high/low is the source clock tick, not the divided channel counter clock.

Return

- ESP_ERR_INVALID_ARG Parameter error
- ESP_OK Success

Parameters

- `channel`: RMT channel
- `carrier_en`: Whether to enable output carrier.
- `high_level`: High level duration of carrier
- `low_level`: Low level duration of carrier.
- `carrier_level`: Configure the way carrier wave is modulated for channel.
  - 1’ b1:transmit on low output level
  - 1’ b0:transmit on high output level

esp_err_t **rmt_set_mem_pd** (*rmt_channel_t channel*, bool *pd_en*)

Set RMT memory in low power mode.

Reduce power consumed by memory. 1:memory is in low power state.

Return

- ESP_ERR_INVALID_ARG Parameter error
- ESP_OK Success

Parameters

- `channel`: RMT channel
- `pd_en`: RMT memory low power enable.

esp_err_t **rmt_get_mem_pd** (*rmt_channel_t channel*, bool **pd_en*)

Get RMT memory low power mode.

Return

- ESP_ERR_INVALID_ARG Parameter error
- ESP_OK Success

Parameters

- `channel`: RMT channel
- `pd_en`: Pointer to accept RMT memory low power mode.

esp_err_t **rmt_tx_start**(*rmt_channel_t channel*, bool *tx_idx_rst*)

Set RMT start sending data from memory.

Return

- ESP_ERR_INVALID_ARG Parameter error
- ESP_OK Success

Parameters

- `channel`: RMT channel
- `tx_idx_rst`: Set true to reset memory index for TX. Otherwise, transmitter will continue sending from the last index in memory.

esp_err_t **rmt_tx_stop**(*rmt_channel_t channel*)

Set RMT stop sending.

Return

- ESP_ERR_INVALID_ARG Parameter error
- ESP_OK Success

Parameters

- `channel`: RMT channel

esp_err_t **rmt_rx_start**(*rmt_channel_t channel*, bool *rx_idx_rst*)

Set RMT start receiving data.

Return

- ESP_ERR_INVALID_ARG Parameter error
- ESP_OK Success

Parameters

- `channel`: RMT channel
- `rx_idx_rst`: Set true to reset memory index for receiver. Otherwise, receiver will continue receiving data to the last index in memory.

esp_err_t **rmt_rx_stop**(*rmt_channel_t channel*)

Set RMT stop receiving data.

Return

- ESP_ERR_INVALID_ARG Parameter error
- ESP_OK Success

Parameters

- `channel`: RMT channel

esp_err_t **rmt_tx_memory_reset**(*rmt_channel_t channel*)

Reset RMT TX memory.

Return

- ESP_ERR_INVALID_ARG Parameter error
- ESP_OK Success

Parameters

- `channel`: RMT channel

esp_err_t **rmt_rx_memory_reset**(*rmt_channel_t channel*)

Reset RMT RX memory.

Return

- ESP_ERR_INVALID_ARG Parameter error
- ESP_OK Success

Parameters

- `channel`: RMT channel

esp_err_t **rmt_set_memory_owner** (*rmt_channel_t channel*, *rmt_mem_owner_t owner*)
Set RMT memory owner.

Return
- ESP_ERR_INVALID_ARG Parameter error
- ESP_OK Success

Parameters
- `channel`: RMT channel
- `owner`: To set when the transmitter or receiver can process the memory of channel.

esp_err_t **rmt_get_memory_owner** (*rmt_channel_t channel*, *rmt_mem_owner_t *owner*)
Get RMT memory owner.

Return
- ESP_ERR_INVALID_ARG Parameter error
- ESP_OK Success

Parameters
- `channel`: RMT channel
- `owner`: Pointer to get memory owner.

esp_err_t **rmt_set_tx_loop_mode** (*rmt_channel_t channel*, bool *loop_en*)
Set RMT tx loop mode.

Return
- ESP_ERR_INVALID_ARG Parameter error
- ESP_OK Success

Parameters
- `channel`: RMT channel
- `loop_en`: Enable RMT transmitter loop sending mode. If set true, transmitter will continue sending from the first data to the last data in channel over and over again in a loop.

esp_err_t **rmt_get_tx_loop_mode** (*rmt_channel_t channel*, bool *loop_en*)
Get RMT tx loop mode.

Return
- ESP_ERR_INVALID_ARG Parameter error
- ESP_OK Success

Parameters
- `channel`: RMT channel
- `loop_en`: Pointer to accept RMT transmitter loop sending mode.

esp_err_t **rmt_set_rx_filter** (*rmt_channel_t channel*, bool *rx_filter_en*, uint8_t *thresh*)
Set RMT RX filter.

In receive mode, channel will ignore input pulse when the pulse width is smaller than threshold. Counted in source clock, not divided counter clock.

Return
- ESP_ERR_INVALID_ARG Parameter error
- ESP_OK Success

Parameters
- `channel`: RMT channel
- `rx_filter_en`: To enable RMT receiver filter.
- `thresh`: Threshold of pulse width for receiver.

esp_err_t **rmt_set_source_clk** (*rmt_channel_t channel*, *rmt_source_clk_t base_clk*)
Set RMT source clock.

RMT module has two clock sources:

1. APB clock which is 80Mhz
2. REF tick clock, which would be 1Mhz (not supported in this version).

Return
- ESP_ERR_INVALID_ARG Parameter error

- ESP_OK Success

Parameters

- `channel`: RMT channel
- `base_clk`: To choose source clock for RMT module.

esp_err_t **rmt_get_source_clk** (*rmt_channel_t channel*, *rmt_source_clk_t *src_clk*)

Get RMT source clock.

RMT module has two clock sources:

1. APB clock which is 80Mhz
2. REF tick clock, which would be 1Mhz (not supported in this version).

Return

- ESP_ERR_INVALID_ARG Parameter error
- ESP_OK Success

Parameters

- `channel`: RMT channel
- `src_clk`: Pointer to accept source clock for RMT module.

esp_err_t **rmt_set_idle_level** (*rmt_channel_t channel*, bool *idle_out_en*, *rmt_idle_level_t level*)

Set RMT idle output level for transmitter.

Return

- ESP_ERR_INVALID_ARG Parameter error
- ESP_OK Success

Parameters

- `channel`: RMT channel
- `idle_out_en`: To enable idle level output.
- `level`: To set the output signal’ s level for channel in idle state.

esp_err_t **rmt_get_idle_level** (*rmt_channel_t channel*, bool **idle_out_en*, *rmt_idle_level_t *level*)

Get RMT idle output level for transmitter.

Return

- ESP_ERR_INVALID_ARG Parameter error
- ESP_OK Success

Parameters

- `channel`: RMT channel
- `idle_out_en`: Pointer to accept value of enable idle.
- `level`: Pointer to accept value of output signal’ s level in idle state for specified channel.

esp_err_t **rmt_get_status** (*rmt_channel_t channel*, uint32_t **status*)

Get RMT status.

Return

- ESP_ERR_INVALID_ARG Parameter error
- ESP_OK Success

Parameters

- `channel`: RMT channel
- `status`: Pointer to accept channel status. Please refer to RMT_CHnSTATUS_REG(n=0~7) in `rmt_reg.h` for more details of each field.

esp_err_t **rmt_set_rx_intr_en** (*rmt_channel_t channel*, bool *en*)

Set RMT RX interrupt enable.

Return

- ESP_ERR_INVALID_ARG Parameter error
- ESP_OK Success

Parameters

- `channel`: RMT channel
- `en`: enable or disable RX interrupt.

esp_err_t **rmt_set_err_intr_en** (*rmt_channel_t channel*, bool *en*)

Set RMT RX error interrupt enable.

Return
- ESP_ERR_INVALID_ARG Parameter error
- ESP_OK Success

Parameters
- `channel`: RMT channel
- `en`: enable or disable RX err interrupt.

esp_err_t **rmt_set_tx_intr_en**(*rmt_channel_t channel*, bool *en*)
Set RMT TX interrupt enable.

Return
- ESP_ERR_INVALID_ARG Parameter error
- ESP_OK Success

Parameters
- `channel`: RMT channel
- `en`: enable or disable TX interrupt.

esp_err_t **rmt_set_tx_thr_intr_en**(*rmt_channel_t channel*, bool *en*, uint16_t *evt_thresh*)
Set RMT TX threshold event interrupt enable.

An interrupt will be triggered when the number of transmitted items reaches the threshold value

Return
- ESP_ERR_INVALID_ARG Parameter error
- ESP_OK Success

Parameters
- `channel`: RMT channel
- `en`: enable or disable TX event interrupt.
- `evt_thresh`: RMT event interrupt threshold value

esp_err_t **rmt_set_pin**(*rmt_channel_t channel*, *rmt_mode_t mode*, *gpio_num_t gpio_num*)
Set RMT pin.

Return
- ESP_ERR_INVALID_ARG Parameter error
- ESP_OK Success

Parameters
- `channel`: RMT channel
- `mode`: TX or RX mode for RMT
- `gpio_num`: GPIO number to transmit or receive the signal.

esp_err_t **rmt_config**(**const** *rmt_config_t *rmt_param*)
Configure RMT parameters.

Return
- ESP_ERR_INVALID_ARG Parameter error
- ESP_OK Success

Parameters
- `rmt_param`: RMT parameter struct

esp_err_t **rmt_isr_register**(void (**fn*)) void *
, void **arg*, int *intr_alloc_flags*, *rmt_isr_handle_t *handle*Register RMT interrupt handler, the handler is an ISR.

The handler will be attached to the same CPU core that this function is running on.

Note If you already called rmt_driver_install to use system RMT driver, please do not register ISR handler again.

Return
- ESP_OK Success
- ESP_ERR_INVALID_ARG Function pointer error.
- ESP_FAIL System driver installed, can not register ISR handler for RMT

Parameters
- `fn`: Interrupt handler function.

- `arg`: Parameter for the handler function
- `intr_alloc_flags`: Flags used to allocate the interrupt. One or multiple (ORred) ESP_INTR_FLAG_* values. See esp_intr_alloc.h for more info.
- `handle`: If non-zero, a handle to later clean up the ISR gets stored here.

esp_err_t **rmt_isr_deregister**(*rmt_isr_handle_t handle*)

Deregister previously registered RMT interrupt handler.

Return
- ESP_OK Success
- ESP_ERR_INVALID_ARG Handle invalid

Parameters
- `handle`: Handle obtained from rmt_isr_register

esp_err_t **rmt_fill_tx_items**(*rmt_channel_t channel*, **const** rmt_item32_t **item*, uint16_t *item_num*, uint16_t *mem_offset*)

Fill memory data of channel with given RMT items.

Return
- ESP_ERR_INVALID_ARG Parameter error
- ESP_OK Success

Parameters
- `channel`: RMT channel
- `item`: Pointer of items.
- `item_num`: RMT sending items number.
- `mem_offset`: Index offset of memory.

esp_err_t **rmt_driver_install**(*rmt_channel_t channel*, size_t *rx_buf_size*, int *intr_alloc_flags*)

Initialize RMT driver.

Return
- ESP_ERR_INVALID_STATE Driver is already installed, call rmt_driver_uninstall first.
- ESP_ERR_NO_MEM Memory allocation failure
- ESP_ERR_INVALID_ARG Parameter error
- ESP_OK Success

Parameters
- `channel`: RMT channel
- `rx_buf_size`: Size of RMT RX ringbuffer. Can be 0 if the RX ringbuffer is not used.
- `intr_alloc_flags`: Flags for the RMT driver interrupt handler. Pass 0 for default flags. See esp_intr_alloc.h for details. If ESP_INTR_FLAG_IRAM is used, please do not use the memory allocated from psram when calling rmt_write_items.

esp_err_t **rmt_driver_uninstall**(*rmt_channel_t channel*)

Uninstall RMT driver.

Return
- ESP_ERR_INVALID_ARG Parameter error
- ESP_OK Success

Parameters
- `channel`: RMT channel

esp_err_t **rmt_get_channel_status**(*rmt_channel_status_result_t *channel_status*)

Get the current status of eight channels.

Note Do not call this function if it is possible that `rmt_driver_uninstall` will be called at the same time.

Return
- ESP_ERR_INVALID_ARG Parameter is NULL
- ESP_OK Success

Parameters
- `[out] channel_status`: store the current status of each channel

esp_err_t **rmt_get_counter_clock**(*rmt_channel_t channel*, uint32_t **clock_hz*)

Get speed of channel' s internal counter clock.

Return

- ESP_ERR_INVALID_ARG Parameter is NULL
- ESP_OK Success

Parameters

- `channel`: RMT channel
- `[out] clock_hz`: counter clock speed, in hz

esp_err_t **rmt_write_items**(*rmt_channel_t channel*, **const** rmt_item32_t **rmt_item*, int *item_num*, bool *wait_tx_done*)

RMT send waveform from rmt_item array.

This API allows user to send waveform with any length.

Note This function will not copy data, instead, it will point to the original items, and send the waveform items. If wait_tx_done is set to true, this function will block and will not return until all items have been sent out. If wait_tx_done is set to false, this function will return immediately, and the driver interrupt will continue sending the items. We must make sure the item data will not be damaged when the driver is still sending items in driver interrupt.

Return

- ESP_ERR_INVALID_ARG Parameter error
- ESP_OK Success

Parameters

- `channel`: RMT channel
- `rmt_item`: head point of RMT items array. If ESP_INTR_FLAG_IRAM is used, please do not use the memory allocated from psram when calling rmt_write_items.
- `item_num`: RMT data item number.
- `wait_tx_done`:
  - If set 1, it will block the task and wait for sending done.
  - If set 0, it will not wait and return immediately.

esp_err_t **rmt_wait_tx_done**(*rmt_channel_t channel*, TickType_t *wait_time*)

Wait RMT TX finished.

Return

- ESP_OK RMT Tx done successfully
- ESP_ERR_TIMEOUT Exceeded the ‘wait_time’ given
- ESP_ERR_INVALID_ARG Parameter error
- ESP_FAIL Driver not installed

Parameters

- `channel`: RMT channel
- `wait_time`: Maximum time in ticks to wait for transmission to be complete. If set 0, return immediately with ESP_ERR_TIMEOUT if TX is busy (polling).

esp_err_t **rmt_get_ringbuf_handle**(*rmt_channel_t channel*, *RingbufHandle_t *buf_handle*)

Get ringbuffer from RMT.

Users can get the RMT RX ringbuffer handle, and process the RX data.

Return

- ESP_ERR_INVALID_ARG Parameter error
- ESP_OK Success

Parameters

- `channel`: RMT channel
- `buf_handle`: Pointer to buffer handle to accept RX ringbuffer handle.

esp_err_t **rmt_translator_init**(*rmt_channel_t channel*, *sample_to_rmt_t fn*)

Init rmt translator and register user callback. The callback will convert the raw data that needs to be sent to rmt format. If a channel is initialized more than once, tha user callback will be replaced by the later.

Return

- ESP_FAIL Init fail.
- ESP_OK Init success.

Parameters

- `channel`: RMT channel .
- `fn`: Point to the data conversion function.

esp_err_t **rmt_translator_set_context** (*rmt_channel_t channel*, void **context*)

Set user context for the translator of specific channel.

Return
- ESP_FAIL Set context fail
- ESP_OK Set context success

Parameters
- `channel`: RMT channel number
- `context`: User context

esp_err_t **rmt_translator_get_context** (**const** size_t **item_num*, void ***context*)

Get the user context set by ‘rmt_translator_set_context’ .

Note This API must be invoked in the RMT translator callback function, and the first argument must be the actual parameter ‘item_num’ you got in that callback function.

Return
- ESP_FAIL Get context fail
- ESP_OK Get context success

Parameters
- `item_num`: Address of the memory which contains the number of translated items (It’ s from driver’ s internal memroy)
- `context`: Returned User context

esp_err_t **rmt_write_sample** (*rmt_channel_t channel*, **const** uint8_t **src*, size_t *src_size*, bool *wait_tx_done*)

Translate uint8_t type of data into rmt format and send it out. Requires rmt_translator_init to init the translator first.

Return
- ESP_FAIL Send fail
- ESP_OK Send success

Parameters
- `channel`: RMT channel .
- `src`: Pointer to the raw data.
- `src_size`: The size of the raw data.
- `wait_tx_done`: Set true to wait all data send done.

rmt_tx_end_callback_t **rmt_register_tx_end_callback** (*rmt_tx_end_fn_t function*, void **arg*)

Registers a callback that will be called when transmission ends.

Called by rmt_driver_isr_default in interrupt context.

Note Requires rmt_driver_install to install the default ISR handler.

Return the previous callback settings (members will be set to NULL if there was none)

Parameters
- `function`: Function to be called from the default interrupt handler or NULL.
- `arg`: Argument which will be provided to the callback when it is called.

esp_err_t **rmt_memory_rw_rst** (*rmt_channel_t channel*)

Reset RMT TX/RX memory index.

Return
- ESP_ERR_INVALID_ARG Parameter error
- ESP_OK Success

Parameters
- `channel`: RMT channel

void **rmt_set_intr_enable_mask** (uint32_t *mask*)

Set mask value to RMT interrupt enable register.

Parameters
- `mask`: Bit mask to set to the register

void **rmt_clr_intr_enable_mask**(uint32_t *mask*)
Clear mask value to RMT interrupt enable register.

Parameters
- `mask`: Bit mask to clear the register

Structures

struct rmt_tx_config_t
Data struct of RMT TX configure parameters.

Public Members

uint32_t **carrier_freq_hz**
RMT carrier frequency

rmt_carrier_level_t **carrier_level**
Level of the RMT output, when the carrier is applied

rmt_idle_level_t **idle_level**
RMT idle level

uint8_t **carrier_duty_percent**
RMT carrier duty (%)

bool **carrier_en**
RMT carrier enable

bool **loop_en**
Enable sending RMT items in a loop

bool **idle_output_en**
RMT idle level output enable

struct rmt_rx_config_t
Data struct of RMT RX configure parameters.

Public Members

uint16_t **idle_threshold**
RMT RX idle threshold

uint8_t **filter_ticks_thresh**
RMT filter tick number

bool **filter_en**
RMT receiver filter enable

struct rmt_config_t
Data struct of RMT configure parameters.

Public Members

rmt_mode_t **rmt_mode**
RMT mode: transmitter or receiver

rmt_channel_t **channel**
RMT channel

gpio_num_t **gpio_num**
RMT GPIO number

uint8_t **clk_div**
RMT channel counter divider

uint8_t **mem_block_num**
RMT memory block number

uint32_t **flags**
RMT channel extra configurations, OR' d with RMT_CHANNEL_FLAGS_[*]

rmt_tx_config_t **tx_config**
RMT TX parameter

rmt_rx_config_t **rx_config**
RMT RX parameter

struct rmt_tx_end_callback_t
Structure encapsulating a RMT TX end callback.

Public Members

rmt_tx_end_fn_t **function**
Function which is called on RMT TX end

void ***arg**
Optional argument passed to function

Macros

RMT_CHANNEL_FLAGS_AWARE_DFS
Channel can work during APB clock scaling

RMT_MEM_ITEM_NUM
Define memory space of each RMT channel (in words = 4 bytes)

RMT_DEFAULT_CONFIG_TX(gpio, channel_id)
Default configuration for Tx channel.

RMT_DEFAULT_CONFIG_RX(gpio, channel_id)
Default configuration for RX channel.

Type Definitions

typedef *intr_handle_t* **rmt_isr_handle_t**
RMT interrupt handle.

typedef void (***rmt_tx_end_fn_t**)(*rmt_channel_t* channel, void *arg)
Type of RMT Tx End callback function.

typedef void (***sample_to_rmt_t**)(**const** void *src, rmt_item32_t *dest, size_t src_size, size_t wanted_num, size_t *translated_size, size_t *item_num)
User callback function to convert uint8_t type data to rmt format(rmt_item32_t).

This function may be called from an ISR, so, the code should be short and efficient.

Note In fact, item_num should be a multiple of translated_size, e.g. : When we convert each byte of uint8_t type data to rmt format data, the relation between item_num and translated_size should be `item_num = translated_size*8`.

Parameters

- `src`: Pointer to the buffer storing the raw data that needs to be converted to rmt format.
- `[out] dest`: Pointer to the buffer storing the rmt format data.
- `src_size`: The raw data size.
- `wanted_num`: The number of rmt format data that wanted to get.
- `[out] translated_size`: The size of the raw data that has been converted to rmt format, it should return 0 if no data is converted in user callback.
- `[out] item_num`: The number of the rmt format data that actually converted to, it can be less than wanted_num if there is not enough raw data, but cannot exceed wanted_num. it should return 0 if no data was converted.

Header File

- hal/include/hal/rmt_types.h

Structures

struct rmt_channel_status_result_t

Data struct of RMT channel status.

Public Members

rmt_channel_status_t **status**[**RMT_CHANNEL_MAX**]

Store the current status of each channel

Enumerations

enum rmt_channel_t

RMT channel ID.

Values:

RMT_CHANNEL_0

RMT channel number 0

RMT_CHANNEL_1

RMT channel number 1

RMT_CHANNEL_2

RMT channel number 2

RMT_CHANNEL_3

RMT channel number 3

RMT_CHANNEL_4

RMT channel number 4

RMT_CHANNEL_5

RMT channel number 5

RMT_CHANNEL_6

RMT channel number 6

RMT_CHANNEL_7

RMT channel number 7

RMT_CHANNEL_MAX

Number of RMT channels

enum rmt_mem_owner_t

RMT Internal Memory Owner.

Values:

RMT_MEM_OWNER_TX

RMT RX mode, RMT transmitter owns the memory block

RMT_MEM_OWNER_RX

RMT RX mode, RMT receiver owns the memory block

RMT_MEM_OWNER_MAX

enum rmt_source_clk_t

Clock Source of RMT Channel.

Values:

RMT_BASECLK_REF = 0

RMT source clock is REF_TICK, 1MHz by default

RMT_BASECLK_APB = 1
RMT source clock is APB CLK, 80Mhz by default

RMT_BASECLK_MAX

enum rmt_data_mode_t
RMT Data Mode.

Note We highly recommended to use MEM mode not FIFO mode since there will be some gotcha in FIFO mode.

Values:

RMT_DATA_MODE_FIFO

RMT_DATA_MODE_MEM

RMT_DATA_MODE_MAX

enum rmt_mode_t
RMT Channel Working Mode (TX or RX)

Values:

RMT_MODE_TX
RMT TX mode

RMT_MODE_RX
RMT RX mode

RMT_MODE_MAX

enum rmt_idle_level_t
RMT Idle Level.

Values:

RMT_IDLE_LEVEL_LOW
RMT TX idle level: low Level

RMT_IDLE_LEVEL_HIGH
RMT TX idle level: high Level

RMT_IDLE_LEVEL_MAX

enum rmt_carrier_level_t
RMT Carrier Level.

Values:

RMT_CARRIER_LEVEL_LOW
RMT carrier wave is modulated for low Level output

RMT_CARRIER_LEVEL_HIGH
RMT carrier wave is modulated for high Level output

RMT_CARRIER_LEVEL_MAX

enum rmt_channel_status_t
RMT Channel Status.

Values:

RMT_CHANNEL_UNINIT
RMT channel uninitialized

RMT_CHANNEL_IDLE
RMT channel status idle

RMT_CHANNEL_BUSY
RMT channel status busy

2.3.11 SDMMC Host Driver

Overview

ESP32’s SDMMC host peripheral has two slots:

- Slot 0 (*SDMMC_HOST_SLOT_0*) is an 8-bit slot. It uses `HS1_*` signals in the PIN MUX.
- Slot 1 (*SDMMC_HOST_SLOT_1*) is a 4-bit slot. It uses `HS2_*` signals in the PIN MUX.

Pin mappings of these slots are given in the table below.

Signal	Slot 0	Slot 1
CMD	GPIO11	GPIO15
CLK	GPIO6	GPIO14
D0	GPIO7	GPIO2
D1	GPIO8	GPIO4
D2	GPIO9	GPIO12
D3	GPIO10	GPIO13
D4	GPIO16	
D5	GPIO17	
D6	GPIO5	
D7	GPIO18	
CD	any input via GPIO matrix	
WP	any input via GPIO matrix	

The Card Detect and Write Protect signals can be routed to arbitrary pins using the GPIO matrix. To reserve the pins, set the `gpio_cd` and `gpio_wp` members of the *sdmmc_slot_config_t* structure before calling *sdmmc_host_init_slot()*. Please note that it is not advised to specify a Card Detect pin when working with SDIO cards, because the card detect signal in ESP32 can also trigger SDIO slave interrupt.

警告： Pins used by Slot 0 (`HS1_*`) are also used to connect the SPI flash chip in ESP32-WROOM and ESP32-WROVER modules. These pins cannot be shared between an SD card and SPI flash. If you need to use Slot 0, connect SPI flash to different pins and set eFuses accordingly.

Supported Speed Modes

SDMMC Host driver supports the following speed modes:

- Default Speed (20 MHz), 4-line/1-line (with SD cards), and 8-line (with 3.3 V eMMC)
- High Speed (40 MHz), 4-line/1-line (with SD cards), and 8-line (with 3.3 V eMMC)
- High Speed DDR (40 MHz), 4-line (with 3.3 V eMMC)

Speed modes not supported at present:

- High Speed DDR mode, 8-line eMMC
- UHS-I 1.8 V modes, 4-line SD cards

Using the SDMMC Host Driver

Of all the functions listed below, only the following ones will be used directly by most applications:

- *sdmmc_host_init()*
- *sdmmc_host_init_slot()*
- *sdmmc_host_deinit()*

Other functions, such as the ones given below, will be called by the SD/MMC protocol layer via function pointers in the *sdmmc_host_t* structure:

- *sdmmc_host_set_bus_width()*
- *sdmmc_host_set_card_clk()*
- *sdmmc_host_do_transaction()*

Configuring Bus Width and Frequency

With the default initializers for *sdmmc_host_t* and *sdmmc_slot_config_t* (*SDMMC_HOST_DEFAULT* and *SDMMC_SLOT_CONFIG_DEFAULT*), SDMMC Host driver will attempt to use the widest bus supported by the card (4 lines for SD, 8 lines for eMMC) and the frequency of 20 MHz.

In the designs where communication at 40 MHz frequency can be achieved, it is possible to increase the bus frequency by changing the `max_freq_khz` field of *sdmmc_host_t*:

```
sdmmc_host_t host = SDMMC_HOST_DEFAULT();
host.max_freq_khz = SDMMC_FREQ_HIGHSPEED;
```

To configure the bus width, set the `width` field of *sdmmc_slot_config_t*. For example, to set 1-line mode:

```
sdmmc_slot_config_t slot = SDMMC_SLOT_CONFIG_DEFAULT();
slot.width = 1;
```

See also

See *SD/SDIO/MMC Driver* for the higher level driver which implements the protocol layer.

See *SD SPI Host Driver* for a similar driver which uses the SPI controller and is limited to SD protocol’s SPI mode.

See *SD Pull-up Requirements* for pullup support and compatibilities of modules and development kits.

API Reference

Header File

- driver/include/driver/sdmmc_host.h

Functions

esp_err_t **sdmmc_host_init**(void)

Initialize SDMMC host peripheral.

Note This function is not thread safe

Return

- ESP_OK on success
- ESP_ERR_INVALID_STATE if sdmmc_host_init was already called
- ESP_ERR_NO_MEM if memory can not be allocated

esp_err_t **sdmmc_host_init_slot**(int *slot*, **const** *sdmmc_slot_config_t* **slot_config*)

Initialize given slot of SDMMC peripheral.

On the ESP32, SDMMC peripheral has two slots:

- Slot 0: 8-bit wide, maps to HS1_* signals in PIN MUX
- Slot 1: 4-bit wide, maps to HS2_* signals in PIN MUX

Card detect and write protect signals can be routed to arbitrary GPIOs using GPIO matrix.

Note This function is not thread safe

Return

- ESP_OK on success
- ESP_ERR_INVALID_STATE if host has not been initialized using sdmmc_host_init

Parameters

- `slot`: slot number (SDMMC_HOST_SLOT_0 or SDMMC_HOST_SLOT_1)

- `slot_config`: additional configuration for the slot

esp_err_t **sdmmc_host_set_bus_width**(int *slot*, size_t *width*)

Select bus width to be used for data transfer.

SD/MMC card must be initialized prior to this command, and a command to set bus width has to be sent to the card (e.g. SD_APP_SET_BUS_WIDTH)

Note This function is not thread safe

Return

- ESP_OK on success
- ESP_ERR_INVALID_ARG if slot number or width is not valid

Parameters

- `slot`: slot number (SDMMC_HOST_SLOT_0 or SDMMC_HOST_SLOT_1)
- `width`: bus width (1, 4, or 8 for slot 0; 1 or 4 for slot 1)

size_t **sdmmc_host_get_slot_width**(int *slot*)

Get bus width configured in `sdmmc_host_init_slot` to be used for data transfer.

Return configured bus width of the specified slot.

Parameters

- `slot`: slot number (SDMMC_HOST_SLOT_0 or SDMMC_HOST_SLOT_1)

esp_err_t **sdmmc_host_set_card_clk**(int *slot*, uint32_t *freq_khz*)

Set card clock frequency.

Currently only integer fractions of 40MHz clock can be used. For High Speed cards, 40MHz can be used. For Default Speed cards, 20MHz can be used.

Note This function is not thread safe

Return

- ESP_OK on success
- other error codes may be returned in the future

Parameters

- `slot`: slot number (SDMMC_HOST_SLOT_0 or SDMMC_HOST_SLOT_1)
- `freq_khz`: card clock frequency, in kHz

esp_err_t **sdmmc_host_set_bus_ddr_mode**(int *slot*, bool *ddr_enabled*)

Enable or disable DDR mode of SD interface.

Return

- ESP_OK on success
- ESP_ERR_NOT_SUPPORTED if DDR mode is not supported on this slot

Parameters

- `slot`: slot number (SDMMC_HOST_SLOT_0 or SDMMC_HOST_SLOT_1)
- `ddr_enabled`: enable or disable DDR mode

esp_err_t **sdmmc_host_do_transaction**(int *slot*, *sdmmc_command_t* **cmdinfo*)

Send command to the card and get response.

This function returns when command is sent and response is received, or data is transferred, or timeout occurs.

Note This function is not thread safe w.r.t. init/deinit functions, and bus width/clock speed configuration functions. Multiple tasks can call sdmmc_host_do_transaction as long as other sdmmc_host_* functions are not called.

Attention Data buffer passed in cmdinfo->data must be in DMA capable memory

Return

- ESP_OK on success
- ESP_ERR_TIMEOUT if response or data transfer has timed out
- ESP_ERR_INVALID_CRC if response or data transfer CRC check has failed
- ESP_ERR_INVALID_RESPONSE if the card has sent an invalid response
- ESP_ERR_INVALID_SIZE if the size of data transfer is not valid in SD protocol
- ESP_ERR_INVALID_ARG if the data buffer is not in DMA capable memory

Parameters

- `slot`: slot number (SDMMC_HOST_SLOT_0 or SDMMC_HOST_SLOT_1)

- `cmdinfo`: pointer to structure describing command and data to transfer

esp_err_t **sdmmc_host_io_int_enable**(int *slot*)
Enable IO interrupts.

This function configures the host to accept SDIO interrupts.

Return returns ESP_OK, other errors possible in the future
Parameters
- `slot`: slot number (SDMMC_HOST_SLOT_0 or SDMMC_HOST_SLOT_1)

esp_err_t **sdmmc_host_io_int_wait**(int *slot*, TickType_t *timeout_ticks*)
Block until an SDIO interrupt is received, or timeout occurs.

Return
- ESP_OK on success (interrupt received)
- ESP_ERR_TIMEOUT if the interrupt did not occur within timeout_ticks

Parameters
- `slot`: slot number (SDMMC_HOST_SLOT_0 or SDMMC_HOST_SLOT_1)
- `timeout_ticks`: number of RTOS ticks to wait for the interrupt

esp_err_t **sdmmc_host_deinit**(void)
Disable SDMMC host and release allocated resources.

Note This function is not thread safe
Return
- ESP_OK on success
- ESP_ERR_INVALID_STATE if sdmmc_host_init function has not been called

esp_err_t **sdmmc_host_pullup_en**(int *slot*, int *width*)
Enable the pull-ups of sd pins.

Note You should always place actual pullups on the lines instead of using this function. Internal pullup resistance are high and not sufficient, may cause instability in products. This is for debug or examples only.
Return
- ESP_OK: if success
- ESP_ERR_INVALID_ARG: if configured width larger than maximum the slot can support

Parameters
- `slot`: Slot to use, normally set it to 1.
- `width`: Bit width of your configuration, 1 or 4.

Structures

struct sdmmc_slot_config_t
Extra configuration for SDMMC peripheral slot

Public Members

gpio_num_t **gpio_cd**
GPIO number of card detect signal.

gpio_num_t **gpio_wp**
GPIO number of write protect signal.

uint8_t **width**
Bus width used by the slot (might be less than the max width supported)

uint32_t **flags**
Features used by this slot.

Macros

SDMMC_HOST_SLOT_0
SDMMC slot 0.

SDMMC_HOST_SLOT_1
SDMMC slot 1.

SDMMC_HOST_DEFAULT()
Default *sdmmc_host_t* structure initializer for SDMMC peripheral.

Uses SDMMC peripheral, with 4-bit mode enabled, and max frequency set to 20MHz

SDMMC_SLOT_FLAG_INTERNAL_PULLUP
Enable internal pullups on enabled pins. The internal pullups are insufficient however, please make sure external pullups are connected on the bus. This is for debug / example purpose only.

SDMMC_SLOT_NO_CD
indicates that card detect line is not used

SDMMC_SLOT_NO_WP
indicates that write protect line is not used

SDMMC_SLOT_WIDTH_DEFAULT
use the default width for the slot (8 for slot 0, 4 for slot 1)

SDMMC_SLOT_CONFIG_DEFAULT()
Macro defining default configuration of SDMMC host slot

2.3.12 SD SPI Host Driver

Overview

The SD SPI host driver allows communicating with one or more SD cards by the SPI Master driver which makes use of the SPI host. Each card is accessed through an SD SPI device represented by an *sdspi_dev_handle_t* spi_handle returned when attaching the device to an SPI bus by calling *sdspi_host_init_device*. The bus should be already initialized before (by *spi_bus_initialize*).

This driver's naming pattern was adopted from the *SDMMC Host* driver due to their similarity. Likewise, the APIs of both drivers are also very similar.

SD SPI driver (access the SD card in SPI mode) offers lower throughput but makes pin selection more flexible. With the help of the GPIO matrix, an SPI peripheral's signals can be routed to any ESP32 pin. Otherwise, if SDMMC host driver is used (See *SDMMC Host*) to access the card in SD 1-bit/4-bit mode, higher throughput can be reached but it requires routing the signals through their dedicated IO_MUX pins only.

With the help of *SPI Master driver* based on, the SPI bus can be shared among SD cards and other SPI devices. The SPI Master driver will handle exclusive access from different tasks.

The SD SPI driver uses software-controlled CS signal.

How to Use

Firstly, use the macro `SDSPI_DEVICE_CONFIG_DEFAULT` to initialize a structure `sdmmc_slot_config_t`, which is used to initialize an SD SPI device. This macro will also fill in the default pin mappings, which is same as the pin mappings of SDMMC host driver. Modify the host and pins of the structure to desired value. Then call *sdspi_host_init_device* to initialize the SD SPI device and attach to its bus.

Then use `SDSPI_HOST_DEFAULT` macro to initialize a `sdmmc_host_t` structure, which is used to store the state and configurations of upper layer (SD/SDIO/MMC driver). Modify the *slot* parameter of the structure to the SD SPI device spi_handle just returned from *sdspi_host_init_device*. Call *sdmmc_card_init* with the `sdmmc_host_t` to probe and initialize the SD card.

Now you can use SD/SDIO/MMC driver functions to access your card!

Other Details

Only the following driver's API functions are normally used by most applications:

- *sdspi_host_init()*
- *sdspi_host_init_device()*
- *sdspi_host_remove_device()*
- *sdspi_host_deinit()*

Other functions are mostly used by the protocol level SD/SDIO/MMC driver via function pointers in the *sdmmc_host_t* structure. For more details, see *the SD/SDIO/MMC Driver*.

注解: SD over SPI does not support speeds above *SDMMC_FREQ_DEFAULT* due to the limitations of the SPI driver.

API Reference

Header File

- driver/include/driver/sdspi_host.h

Functions

esp_err_t **sdspi_host_init**(void)

Initialize SD SPI driver.

Note This function is not thread safe

Return

- ESP_OK on success
- other error codes may be returned in future versions

esp_err_t **sdspi_host_init_device**(**const** *sdspi_device_config_t* *dev_config, *sdspi_dev_handle_t* *out_handle)

Attach and initialize an SD SPI device on the specific SPI bus.

Note This function is not thread safe

Note Initialize the SPI bus by `spi_bus_initialize()` before calling this function.

Note The SDIO over sdspi needs an extra interrupt line. Call `gpio_install_isr_service()` before this function.

Return

- ESP_OK on success
- ESP_ERR_INVALID_ARG if sdspi_host_init_device has invalid arguments
- ESP_ERR_NO_MEM if memory can not be allocated
- other errors from the underlying spi_master and gpio drivers

Parameters

- `dev_config`: pointer to device configuration structure
- `out_handle`: Output of the handle to the sdspi device.

esp_err_t **sdspi_host_remove_device**(*sdspi_dev_handle_t* handle)

Remove an SD SPI device.

Return Always ESP_OK

Parameters

- `handle`: Handle of the SD SPI device

esp_err_t **sdspi_host_do_transaction**(*sdspi_dev_handle_t* handle, *sdmmc_command_t* *cmdinfo)

Send command to the card and get response.

This function returns when command is sent and response is received, or data is transferred, or timeout occurs.

Note This function is not thread safe w.r.t. init/deinit functions, and bus width/clock speed configuration functions. Multiple tasks can call sdspi_host_do_transaction as long as other sdspi_host_* functions are not called.

Return

- ESP_OK on success
- ESP_ERR_TIMEOUT if response or data transfer has timed out
- ESP_ERR_INVALID_CRC if response or data transfer CRC check has failed
- ESP_ERR_INVALID_RESPONSE if the card has sent an invalid response

Parameters

- `handle`: Handle of the sdspi device
- `cmdinfo`: pointer to structure describing command and data to transfer

esp_err_t **sdspi_host_set_card_clk** (*sdspi_dev_handle_t host*, uint32_t *freq_khz*)

Set card clock frequency.

Currently only integer fractions of 40MHz clock can be used. For High Speed cards, 40MHz can be used. For Default Speed cards, 20MHz can be used.

Note This function is not thread safe

Return

- ESP_OK on success
- other error codes may be returned in the future

Parameters

- `host`: Handle of the sdspi device
- `freq_khz`: card clock frequency, in kHz

esp_err_t **sdspi_host_deinit** (void)

Release resources allocated using sdspi_host_init.

Note This function is not thread safe

Return

- ESP_OK on success
- ESP_ERR_INVALID_STATE if sdspi_host_init function has not been called

esp_err_t **sdspi_host_io_int_enable** (*sdspi_dev_handle_t handle*)

Enable SDIO interrupt.

Return

- ESP_OK on success

Parameters

- `handle`: Handle of the sdspi device

esp_err_t **sdspi_host_io_int_wait** (*sdspi_dev_handle_t handle*, TickType_t *timeout_ticks*)

Wait for SDIO interrupt until timeout.

Return

- ESP_OK on success

Parameters

- `handle`: Handle of the sdspi device
- `timeout_ticks`: Ticks to wait before timeout.

esp_err_t **sdspi_host_init_slot** (int *slot*, **const** *sdspi_slot_config_t* *slot_config)

Initialize SD SPI driver for the specific SPI controller.

Note This function is not thread safe

Note The SDIO over sdspi needs an extra interrupt line. Call `gpio_install_isr_service()` before this function.

Parameters

- `slot`: SPI controller to use (SPI2_HOST or SPI3_HOST)
- `slot_config`: pointer to slot configuration structure

Return

- ESP_OK on success
- ESP_ERR_INVALID_ARG if sdspi_init_slot has invalid arguments

- ESP_ERR_NO_MEM if memory can not be allocated
- other errors from the underlying spi_master and gpio drivers

Structures

struct sdspi_device_config_t

Extra configuration for SD SPI device.

Public Members

spi_host_device_t **host_id**

SPI host to use, SPIx_HOST (see spi_types.h).

gpio_num_t **gpio_cs**

GPIO number of CS signal.

gpio_num_t **gpio_cd**

GPIO number of card detect signal.

gpio_num_t **gpio_wp**

GPIO number of write protect signal.

gpio_num_t **gpio_int**

GPIO number of interrupt line (input) for SDIO card.

struct sdspi_slot_config_t

Extra configuration for SPI host.

Public Members

gpio_num_t **gpio_cs**

GPIO number of CS signal.

gpio_num_t **gpio_cd**

GPIO number of card detect signal.

gpio_num_t **gpio_wp**

GPIO number of write protect signal.

gpio_num_t **gpio_int**

GPIO number of interrupt line (input) for SDIO card.

gpio_num_t **gpio_miso**

GPIO number of MISO signal.

gpio_num_t **gpio_mosi**

GPIO number of MOSI signal.

gpio_num_t **gpio_sck**

GPIO number of SCK signal.

int **dma_channel**

DMA channel to be used by SPI driver (1 or 2).

Macros

SDSPI_DEFAULT_HOST

SDSPI_HOST_DEFAULT()

Default *sdmmc_host_t* structure initializer for SD over SPI driver.

Uses SPI mode and max frequency set to 20MHz

'slot' should be set to an sdspi device initialized by `sdspi_host_init_device()`.

SDSPI_SLOT_NO_CD
indicates that card detect line is not used

SDSPI_SLOT_NO_WP
indicates that write protect line is not used

SDSPI_SLOT_NO_INT
indicates that interrupt line is not used

SDSPI_DEVICE_CONFIG_DEFAULT()
Macro defining default configuration of SD SPI device.

SDSPI_SLOT_CONFIG_DEFAULT()
Macro defining default configuration of SPI host

Type Definitions

typedef int **sdspi_dev_handle_t**
Handle representing an SD SPI device.

2.3.13 SDIO Card Slave Driver

Overview

The ESP32 SDIO Card peripherals (Host, Slave) shares two sets of pins as below table. The first set is usually occupied by SPI0 bus which is responsible for the SPI flash holding the code to run. This means SDIO slave driver can only runs on the second set of pins while SDIO host is not using it.

The SDIO slave can run under 3 modes: SPI, 1-bit SD and 4-bit SD modes, which is detected automatically by the hardware. According to the SDIO specification, CMD and DAT0-3 lines should be pulled up no matter in 1-bit, 4-bit or SPI mode.

Connections

Pin Name	Corresponding pins in SPI mode	Slot1	Slot2
		GPIO Number	
CLK	SCLK	6	14
CMD	MOSI	11	15
DAT0	MISO	7	2
DAT1	Interrupt	8	4
DAT2	N.C. (pullup)	9	12
DAT3	#CS	10	13

- 1-bit SD mode: Connect CLK, CMD, DAT0, DAT1 pins and the ground.
- 4-bit SD mode: Connect all pins and the ground.
- SPI mode: Connect SCLK, MOSI, MISO, Interrupt, #CS pins and the ground.

注解： Please check if CMD and DATA lines D0-D3 of the card are properly pulled up by 10 KOhm resistors. This should be ensured even in 1-bit mode or SPI mode. Most official modules don’ t offer these pullups internally. If you are using official development boards, check *Overview of Compatibility* to see whether your development boards have such pullups.

注解： Most official modules have conflicts on strapping pins with the SDIO slave function. If you are using a ESP32 module with 3.3 V flash inside, you have to burn the EFUSE when you are developing on the module for the first time. See *Overview of Compatibility* to see how to make your modules compatible with the SDIO.

Here is a list for modules/kits with 3.3 V flash:

- Modules: ESP32-PICO-D4, ESP32-WROOM-32 series (including ESP32-SOLO-1), ESP32-WROVER-B and ESP32-WROVER-IB

- Kits: ESP32-PICO-KIT, ESP32-DevKitC (till v4), ESP32-WROVER-KIT (v4.1 (also known as ESP32-WROVER-KIT-VB), v2, v1 (also known as DevKitJ v1))

You can tell the version of your ESP23-WROVER-KIT version from the module on it: v4.1 are with ESP32-WROVER-B modules, v3 are with ESP32-WROVER modules, while v2 and v1 are with ESP32-WROOM-32 modules.

Refer to *SD Pull-up Requirements* for more technical details of the pullups.

SD Pull-up Requirements Espressif hardware products are designed for multiple use cases which may require different pull states on pins. For this reason, the pull state of particular pins on certain products will need to be adjusted to provide the pull-ups required in the SD bus.

SD pull-up requirements apply to cases where ESP32 uses the SPI controller to communicate with SD cards. When an SD card is operating in SPI mode or 1-bit SD mode, the CMD and DATA (DAT0 - DAT3) lines of the SD bus must be pulled up by 10 kOhm resistors. Slaves should also have pull-ups on all above-mentioned lines (regardless of whether these lines are connected to the host) in order to prevent SD cards from entering a wrong state.

By default, the MTDI bootstrapping pin is incompatible with the DAT2 line pull-up if the flash voltage is 3.3 V. For more information, see *MTDI Strapping Pin* below.

This document has the following structure:

- *Overview of compatibility* between the default pull states on pins of Espressif ' s products and the states required by the SD bus
- *Solutions* - ideas on how to resolve compatibility issues
- *Related information* - other relevant information

Overview of Compatibility This section provides an overview of compatibility issues that might occur when using SDIO (secure digital input output). Since the SD bus needs to be connected to pull-ups, these issues should be resolved regardless of whether they are related to master (host) or slave (device). Each issue has links to its respective solution. A solution for a host and device may differ.

Systems on a Chip (SoCs)

- ESP32 (except for D2WD versions, see ESP32 datasheet):
  - *No Pull-ups*
  - *Conflicts Between Bootstrap and SDIO on DAT2* for models with 3.3 V flash chip
- ESP32-D2WD:
  - *No Pull-ups*
  - *No Pull-up on GPIO12*

Systems in Packages (SIP)

- ESP32-PICO-D4:
  - *No Pull-ups*
  - *Conflicts Between Bootstrap and SDIO on DAT2*

Modules

- ESP32-WROOM-32 Series, including ESP32-WROOM-32, ESP32-WROOM-32D, ESP32-WROOM-32U, and ESP32-SOLO-1
  - *No Pull-ups*
  - *Conflicts Between Bootstrap and SDIO on DAT2*
- ESP32-WROVER Series, including ESP32-WROVER and ESP32-WROVER-I
  - *No Pull-ups*
- ESP32-WROVER-B Series, including ESP32-WROVER-B and ESP32-WROVER-IB
  - *No Pull-ups*

  - *Conflicts Between Bootstrap and SDIO on DAT2*

Development Boards

- ESP32-PICO-KIT, including PICO-KIT v4.1, v4.0, and v3
  - *No Pull-ups*
  - *Conflicts Between Bootstrap and SDIO on DAT2*
  - *Download Mode Not Working (minor issue)*
- ESP32-DevKitC, including ESP32-DevKitC v4 and v2
  - *No Pull-ups*
  - *Conflicts Between Bootstrap and SDIO on DAT2*
  - *Download Mode Not Working (minor issue)*
- ESP-WROVER-KIT
  - Required pull-ups are provided
  - *Pull-up Conflicts on GPIO13* (v4.1, v3, v2, and v1)
  - *Conflicts Between Bootstrap and SDIO on DAT2* (v4.1, v2, and v1)
  - *Download Mode Not Working (minor issue)* (v2, v1)

  You can determine the version of your ESP23-WROVER-KIT by checking which module is mounted on it:
  - ESP32-WROVER-B on v4.1
  - ESP32-WROVER on v3
  - ESP32-WROOM-32 on v1 and v2
- ESP32-LyraTD-MSC
  - Required pull-ups are provided
  - *Conflicts Between Bootstrap and SDIO on DAT2*
- ESP32-LyraT
  - Required pull-ups are provided
  - *Pull-up Conflicts on GPIO13*

Non-Espressif Hosts Please make sure that your SDIO host provides necessary pull-ups for all SD bus signals.

Solutions

No Pull-ups If you use a development board without pull-ups, you can do the following:

- If your host and slave device are on seperate boards, replace one of them with a board that has pull-ups. For the list of Espressif's development boards with pull-ups, go to *Development Boards*.
- Attach external pull-ups by connecting each pin which requires a pull-up to VDD via a 10 kOhm resistor.

Pull-up Conflicts on GPIO13 If DAT3 of your device is not properly pulled up, you have the following options:

- Use 1-bit SD mode and tie the device's DAT3 to VDD
- Use SPI mode
- **Perform one of the following actions on the GPIO13 pin:**
  - Remove the pull-down resistors
  - Attach a pull-up resistor of less than 5 kOhm (2 kOhm suggested)
  - Pull it up or drive it high either by using the host or with 3.3 V on VDD in 1-bit SD mode

Conflicts Between Bootstrap and SDIO on DAT2 There is a conflict between the boot strapping requirements of the ESP32 and the SDIO protocol. For details, see *MTDI Strapping Pin*.

To resolve the conflict, you have the following options:

1. (Recommended) Burn the flash voltage selection eFuses. This will permanently configure the internal regulator's output voltage to 3.3 V, and GPIO12 will not be used as a bootstrapping pin. After that, connect a pull-up resistor to GPIO12.

> **警告：** Burning eFuses is irreversible! The issue list above might be out of date, so please make sure that the module you are burning has a 3.3 V flash chip by checking the information on http://www.espressif.com/. If you burn the 3.3 V eFuses on a module with a 1.8 V flash chip, the module will stop functioning.

If you are sure that you need to irreversibly burn eFuses, go to your ESP-IDF directory and run the following command:

```
components/esptool_py/esptool/espefuse.py set_flash_voltage 3.3V
```

This command will burn the *XPD_SDIO_TIEH*, *XPD_SDIO_FORCE*, and *XPD_SDIO_REG* eFuses. After all the three eFuses are burned to value 1, the internal VDD_SDIO flash voltage regulator will be permanently set to 3.3 V. You will see the following log if the burning succeeds:

```
espefuse.py v2.6
Connecting....

Enable internal flash voltage regulator (VDD_SDIO) to 3.3 V.
The following eFuses are burned: XPD_SDIO_FORCE, XPD_SDIO_REG, XPD_SDIO_TIEH.
This is an irreversible operation.
Type 'BURN' (all capitals) to continue.
BURN
VDD_SDIO setting complete.
```

To check the status of the eFuses, run:

```
``components/esptool_py/esptool/espefuse.py summary``
```

If running from an automated flashing script, `espefuse.py` has an option `--do-not-confirm`.
For more details, see *ESP32 Technical Reference Manual* [PDF].

2. **If using 1-bit SD mode or SPI mode**, disconnect the DAT2 pin and make sure it is pulled high. For this, do one the following:
   - Leave the host's DAT2 floating and directly connect the slave's DAT2 to VDD.
   - For a slave device, build a firmware with the option `SDIO_SLAVE_FLAG_DAT2_DISABLED` and re-flash your device. This option will help avoid slave detecting on the DAT2 line. Note that 4-bit SD mode will no longer be supported by the standard Card Common Control Register (CCCR); however, the host will not be aware of that. The use of 4-bit SD mode will have to be disabled on the host's side.

No Pull-up on GPIO12 Your module is compatible with the SDIO protocol. Just connect GPIO12 to VDD via a 10 kOhm resistor.

Download Mode Not Working (minor issue) When the GPIO2 pin is pulled high in accordance with the SD pull-up requirements, you cannot enter Download mode because GPIO2 is a bootstrapping pin which in this case must be pulled low.

There are the following solutions:

- For boards that require shorting the GPIO0 and GPIO2 pins with a jumper, put the jumper in place, and the auto-reset circuit will pull GPIO2 low along with GPIO0 before entering Download mode.
- For boards with components attached to their GPIO2 pin (such as pull-down resistors and/or LEDs), check the schematic of your development board for anything connected to GPIO2.
  - **LEDs** would not affect operation in most cases.
  - **Pull-down resistors** can interfere with DAT0 signals and must be removed.

If the above solutions do not work for you, please determine if it is the host or slave device that has pull-ups affecting their GPIO2, then locate these pull-ups and remove them.

Related Information

MTDI Strapping Pin MTDI (GPIO12) is used as a bootstrapping pin to select the output voltage of an internal regulator (VDD_SDIO) which powers the flash chip. This pin has an internal pull-down, so, if left unconnected, it will read low at startup, which will lead to selecting the default 3.3 V operation.

All ESP32-WROVER modules, excluding ESP32-WROVER-B, use 1.8 V flash and have internal pull-ups on GPIO12. Other modules that use 3.3 V flash have no pull-ups on the GPIO12 pin, and this pin is slightly pulled down internally.

When adding a pull-up to this pin for SD card operation, consider the following:

- For boards that do not use the internal regulator (VDD_SDIO) to power flash, GPIO12 can be pulled high.
- For boards using 1.8 V flash chips, GPIO12 needs to be pulled high at reset. This is fully compatible with the SD card operation.
- On boards using the internal regulator and a 3.3 V flash chip, GPIO12 must be pulled low at reset. This is incompatible with the SD card operation. For reference information on compatibility of Espressif's boards with the SD card operation, see *Overview of Compatibility*.

Internal Pull-ups and Strapping Requirements Using external resistors is always preferable. However, Espressif's products have internal weak pull-up and pull-down resistors which can be enabled and used instead of external ones. Please keep in mind that this solution cannot guarantee reliable SDIO communication.

With that said, the information about these internal pull-ups and strapping requirements can still be useful. Espressif hardware products have different weak internal pull-ups / pull-downs connected to CMD and DATA pins. The table below shows the default pull-up and pull-down states of the CMD and DATA pins.

The following abbreviations are used in the table:

- **WPU**: Weak pull-up inside the SoC
- **WPD**: Weak pull-down inside the SoC
- **PU**: Pull-up inside Espressif modules but outside the SoC

表 2: Default pull-up and pull-down states of the CMD and DATA pins

GPIO number	Pin Name	Startup State	Strapping Requirement
15	CMD	WPU	
2	DAT0	WPD	Low for Download mode
4	DAT1	WPD	
12	DAT2	PU for 1.8 V flash; WPD for 3.3 V flash	High for 1.8 V flash; Low for 3.3 V flash
13	DAT3	WPU	

The host initialize the slave into SD mode by first sending CMD0 with DAT3 pin high, or in SPI mode by sending CMD0 with CS pin (the same pin as DAT3) low.

After the initialization, the host can enable the 4-bit SD mode by writing CCCR register 0x07 by CMD52. All the bus detection process are handled by the slave peripheral.

The host has to communicate with the slave by an ESP-slave-specific protocol. The slave driver offers 3 services over Function 1 access by CMD52 and CMD53: (1) a sending FIFO and a receiving FIFO, (2) 52 8-bit R/W registers shared by host and slave, (3) 16 interrupt sources (8 from host to slave, and 8 from slave to host).

Terminology The SDIO slave driver uses the following terms:

- Transfer: a transfer is always started by a command token from the host, and may contain a reply and several data blocks. ESP32 slave software is based on transfers.
- Sending: slave to host transfers.
- Receiving: host to slave transfers.

注解: Register names in *ESP32 Technical Reference Manual* > *SDIO Slave Controller* [PDF] are oriented from the point of view of the host, i.e. 'rx' registers refer to sending, while 'tx' registers refer to receiving. We're not

using *tx* or *rx* in the driver to avoid ambiguities.

- FIFO: specific address in Function 1 that can be access by CMD53 to read/write large amount of data. The address is related to the length requested to read from/write to the slave in a single transfer: *requested length* = 0x1F800-address.
- Ownership: When the driver takes ownership of a buffer, it means the driver can randomly read/write the buffer (usually via DMA). The application should not read/write the buffer until the ownership is returned to the application. If the application reads from a buffer owned by a receiving driver, the data read can be random; if the application writes to a buffer owned by a sending driver, the data sent may be corrupted.
- Requested length: The length requested in one transfer determined by the FIFO address.
- Transfer length: The length requested in one transfer determined by the CMD53 byte/block count field.

注解： Requested length is different from the transfer length. ESP32 slave DMA base on the *requested length* rather than the *transfer length*. The *transfer length* should be no shorter than the *requested length*, and the rest part will be filled with 0 (sending) or discard (receiving).

- Receiving buffer size: The buffer size is pre-defined between the host and the slave before communication starts. Slave application has to set the buffer size during initialization by the `recv_buffer_size` member of `sdio_slave_config_t`.
- Interrupts: the esp32 slave support interrupts in two directions: from host to slave (called slave interrupts below) and from slave to host (called host interrupts below). See more in *Interrupts*.
- Registers: specific address in Function 1 access by CMD52 or CMD53.

Communication with ESP SDIO Slave The host should initialize the ESP32 SDIO slave according to the standard SDIO initialization process (Sector 3.1.2 of SDIO Simplified Specification), which is described briefly in *ESP SDIO Slave Initialization*.

Furthermore, there's an ESP32-specific upper-level communication protocol upon the CMD52/CMD53 to Func 1. Please refer to *ESP SDIO Slave Protocol*. There is also a component *ESP Serial Slave Link* for ESP32 master to communicate with ESP32 SDIO slave, see example peripherals/sdio when programming your host.

Interrupts There are interrupts from host to slave, and from slave to host to help communicating conveniently.

Slave Interrupts The host can interrupt the slave by writing any one bit in the register 0x08D. Once any bit of the register is set, an interrupt is raised and the SDIO slave driver calls the callback function defined in the `slave_intr_cb` member in the `sdio_slave_config_t` structure.

注解： The callback function is called in the ISR, do not use any delay, loop or spinlock in the callback.

There's another set of functions can be used. You can call `sdio_slave_wait_int` to wait for an interrupt within a certain time, or call `sdio_slave_clear_int` to clear interrupts from host. The callback function can work with the wait functions perfectly.

Host Interrupts The slave can interrupt the host by an interrupt line (at certain time) which is level sensitive. When the host see the interrupt line pulled down, it may read the slave interrupt status register, to see the interrupt source. Host can clear interrupt bits, or choose to disable a interrupt source. The interrupt line will hold active until all the sources are cleared or disabled.

There are several dedicated interrupt sources as well as general purpose sources. see `sdio_slave_hostint_t` for more information.

Shared Registers There are 52 8-bit R/W shared registers to share information between host and slave. The slave can write or read the registers at any time by `sdio_slave_read_reg` and `sdio_slave_write_reg`. The host can access (R/W) the register by CMD52 or CMD53.

Receiving FIFO When the host is going to send the slave some packets, it has to check whether the slave is ready to receive by reading the buffer number of slave.

To allow the host sending data to the slave, the application has to load buffers to the slave driver by the following steps:

1. Register the buffer by calling `sdio_slave_recv_register_buf`, and get the handle of the registered buffer. The driver will allocate memory for the linked-list descriptor needed to link the buffer onto the hardware.
2. Load buffers onto the driver by passing the buffer handle to `sdio_slave_recv_load_buf`.
3. Call `sdio_slave_recv` to get the received data. If non-blocking call is needed, set `wait=0`.
4. Pass the handle of processed buffer back to the driver by `sdio_recv_load_buf` again.

注解: To avoid overhead from copying data, the driver itself doesn't have any buffer inside, the application is responsible to offer new buffers in time. The DMA will automatically store received data to the buffer.

Sending FIFO Each time the slave has data to send, it raises an interrupt and the host will request for the packet length. There are two sending modes:

- Stream Mode: when a buffer is loaded to the driver, the buffer length will be counted into the packet length requested by host in the incoming communications. Regardless previous packets are sent or not. This means the host can get data of several buffers in one transfer.
- Packet Mode: the packet length is updated packet by packet, and only when previous packet is sent. This means that the host can only get data of one buffer in one transfer.

注解: To avoid overhead from copying data, the driver itself doesn't have any buffer inside. Namely, the DMA takes data directly from the buffer provided by the application. The application should not touch the buffer until the sending is finished.

The sending mode can be set in the `sending_mode` member of `sdio_slave_config_t`, and the buffer numbers can be set in the `send_queue_size`. All the buffers are restricted to be no larger than 4092 bytes. Though in the stream mode several buffers can be sent in one transfer, each buffer is still counted as one in the queue.

The application can call `sdio_slave_transmit` to send packets. In this case the function returns when the transfer is successfully done, so the queue is not fully used. When higher effeciency is required, the application can use the following functions instead:

1. Pass buffer information (address, length, as well as an `arg` indicating the buffer) to `sdio_slave_send_queue`. If non-blocking call is needed, set `wait=0`. If the `wait` is not `portMAX_DELAY` (wait until success), application has to check the result to know whether the data is put in to the queue or discard.
2. Call `sdio_slave_send_get_finished` to get and deal with a finished transfer. A buffer should be keep unmodified until returned from `sdio_slave_send_get_finished`. This means the buffer is actually sent to the host, rather than just staying in the queue.

There are several ways to use the `arg` in the queue parameter:

1. Directly point `arg` to a dynamic-allocated buffer, and use the `arg` to free it when transfer finished.
2. Wrap transfer informations in a transfer structure, and point `arg` to the structure. You can use the structure to do more things like:

```
typedef struct {
    uint8_t* buffer;
```

(下页继续)

(续上页)

```
    size_t   size;
    int      id;
}sdio_transfer_t;

//and send as:
sdio_transfer_t trans = {
    .buffer = ADDRESS_TO_SEND,
    .size = 8,
    .id = 3,  //the 3rd transfer so far
};
sdio_slave_send_queue(trans.buffer, trans.size, &trans, portMAX_DELAY);

//... maybe more transfers are sent here

//and deal with finished transfer as:
sdio_transfer_t* arg = NULL;
sdio_slave_send_get_finished((void**)&arg, portMAX_DELAY);
ESP_LOGI("tag", "(%d) successfully send %d bytes of %p", arg->id, arg->size,␣
↪arg->buffer);
some_post_callback(arg); //do more things
```

3. Working with the receiving part of this driver, point `arg` to the receive buffer handle of this buffer. So that we can directly use the buffer to receive data when it's sent:

```
uint8_t buffer[256]={1,2,3,4,5,6,7,8};
sdio_slave_buf_handle_t handle = sdio_slave_recv_register_buf(buffer);
sdio_slave_send_queue(buffer, 8, handle, portMAX_DELAY);

//... maybe more transfers are sent here

//and load finished buffer to receive as
sdio_slave_buf_handle_t handle = NULL;
sdio_slave_send_get_finished((void**)&handle, portMAX_DELAY);
sdio_slave_recv_load_buf(handle);
```

More about this, see peripherals/sdio.

Application Example

Slave/master communication: peripherals/sdio.

API Reference

Header File

- hal/include/hal/sdio_slave_types.h

Enumerations

enum sdio_slave_hostint_t

Mask of interrupts sending to the host.

Values:

SDIO_SLAVE_HOSTINT_BIT0 = BIT(0)

General purpose interrupt bit 0.

SDIO_SLAVE_HOSTINT_BIT1 = BIT(1)

SDIO_SLAVE_HOSTINT_BIT2 = BIT(2)

SDIO_SLAVE_HOSTINT_BIT3 = BIT(3)

SDIO_SLAVE_HOSTINT_BIT4 = BIT(4)

SDIO_SLAVE_HOSTINT_BIT5 = BIT(5)

SDIO_SLAVE_HOSTINT_BIT6 = BIT(6)

SDIO_SLAVE_HOSTINT_BIT7 = BIT(7)

SDIO_SLAVE_HOSTINT_SEND_NEW_PACKET = BIT(23)
New packet available.

enum sdio_slave_timing_t
Timing of SDIO slave.

Values:

SDIO_SLAVE_TIMING_PSEND_PSAMPLE = 0
Send at posedge, and sample at posedge. Default value for HS mode. Normally there's no problem using this to work in DS mode.

SDIO_SLAVE_TIMING_NSEND_PSAMPLE
Send at negedge, and sample at posedge. Default value for DS mode and below.

SDIO_SLAVE_TIMING_PSEND_NSAMPLE
Send at posedge, and sample at negedge.

SDIO_SLAVE_TIMING_NSEND_NSAMPLE
Send at negedge, and sample at negedge.

enum sdio_slave_sending_mode_t
Configuration of SDIO slave mode.

Values:

SDIO_SLAVE_SEND_STREAM = 0
Stream mode, all packets to send will be combined as one if possible.

SDIO_SLAVE_SEND_PACKET = 1
Packet mode, one packets will be sent one after another (only increase packet_len if last packet sent).

Header File

- driver/include/driver/sdio_slave.h

Functions

esp_err_t **sdio_slave_initialize**(*sdio_slave_config_t* **config*)
Initialize the sdio slave driver

Return
- ESP_ERR_NOT_FOUND if no free interrupt found.
- ESP_ERR_INVALID_STATE if already initialized.
- ESP_ERR_NO_MEM if fail due to memory allocation failed.
- ESP_OK if success

Parameters
- `config`: Configuration of the sdio slave driver.

void **sdio_slave_deinit**(void)
De-initialize the sdio slave driver to release the resources.

esp_err_t **sdio_slave_start**(void)
Start hardware for sending and receiving, as well as set the IOREADY1 to 1.

Note The driver will continue sending from previous data and PKT_LEN counting, keep data received as well as start receiving from current TOKEN1 counting. See `sdio_slave_reset`.

Return
- ESP_ERR_INVALID_STATE if already started.
- ESP_OK otherwise.

void **sdio_slave_stop**(void)

Stop hardware from sending and receiving, also set IOREADY1 to 0.

Note this will not clear the data already in the driver, and also not reset the PKT_LEN and TOKEN1 counting. Call `sdio_slave_reset` to do that.

esp_err_t **sdio_slave_reset**(void)

Clear the data still in the driver, as well as reset the PKT_LEN and TOKEN1 counting.

Return always return ESP_OK.

sdio_slave_buf_handle_t **sdio_slave_recv_register_buf**(uint8_t **start*)

Register buffer used for receiving. All buffers should be registered before used, and then can be used (again) in the driver by the handle returned.

Note The driver will use and only use the amount of space specified in the `recv_buffer_size` member set in the *`sdio_slave_config_t`*. All buffers should be larger than that. The buffer is used by the DMA, so it should be DMA capable and 32-bit aligned.

Return The buffer handle if success, otherwise NULL.

Parameters

- `start`: The start address of the buffer.

esp_err_t **sdio_slave_recv_unregister_buf**(*sdio_slave_buf_handle_t handle*)

Unregister buffer from driver, and free the space used by the descriptor pointing to the buffer.

Return ESP_OK if success, ESP_ERR_INVALID_ARG if the handle is NULL or the buffer is being used.

Parameters

- `handle`: Handle to the buffer to release.

esp_err_t **sdio_slave_recv_load_buf**(*sdio_slave_buf_handle_t handle*)

Load buffer to the queue waiting to receive data. The driver takes ownership of the buffer until the buffer is returned by `sdio_slave_send_get_finished` after the transaction is finished.

Return

- ESP_ERR_INVALID_ARG if invalid handle or the buffer is already in the queue. Only after the buffer is returened by `sdio_slave_recv` can you load it again.
- ESP_OK if success

Parameters

- `handle`: Handle to the buffer ready to receive data.

esp_err_t **sdio_slave_recv**(*sdio_slave_buf_handle_t* **handle_ret*, uint8_t ***out_addr*, size_t **out_len*, TickType_t *wait*)

Get received data if exist. The driver returns the ownership of the buffer to the app.

Note Call `sdio_slave_load_buf` with the handle to re-load the buffer onto the link list, and receive with the same buffer again. The address and length of the buffer got here is the same as got from `sdio_slave_get_buffer`.

Return

- ESP_ERR_INVALID_ARG if handle_ret is NULL
- ESP_ERR_TIMEOUT if timeout before receiving new data
- ESP_OK if success

Parameters

- `handle_ret`: Handle to the buffer holding received data. Use this handle in `sdio_slave_recv_load_buf` to receive in the same buffer again.
- `[out] out_addr`: Output of the start address, set to NULL if not needed.
- `[out] out_len`: Actual length of the data in the buffer, set to NULL if not needed.
- `wait`: Time to wait before data received.

uint8_t ***sdio_slave_recv_get_buf**(*sdio_slave_buf_handle_t handle*, size_t **len_o*)

Retrieve the buffer corresponding to a handle.

Return buffer address if success, otherwise NULL.

Parameters

- `handle`: Handle to get the buffer.
- `len_o`: Output of buffer length

esp_err_t **sdio_slave_send_queue**(uint8_t *addr, size_t len, void *arg, TickType_t wait)

Put a new sending transfer into the send queue. The driver takes ownership of the buffer until the buffer is returned by `sdio_slave_send_get_finished` after the transaction is finished.

Return

- ESP_ERR_INVALID_ARG if the length is not greater than 0.
- ESP_ERR_TIMEOUT if the queue is still full until timeout.
- ESP_OK if success.

Parameters

- `addr`: Address for data to be sent. The buffer should be DMA capable and 32-bit aligned.
- `len`: Length of the data, should not be longer than 4092 bytes (may support longer in the future).
- `arg`: Argument to returned in `sdio_slave_send_get_finished`. The argument can be used to indicate which transaction is done, or as a parameter for a callback. Set to NULL if not needed.
- `wait`: Time to wait if the buffer is full.

esp_err_t **sdio_slave_send_get_finished**(void **out_arg, TickType_t wait)

Return the ownership of a finished transaction.

Return ESP_ERR_TIMEOUT if no transaction finished, or ESP_OK if succeed.

Parameters

- `out_arg`: Argument of the finished transaction. Set to NULL if unused.
- `wait`: Time to wait if there's no finished sending transaction.

esp_err_t **sdio_slave_transmit**(uint8_t *addr, size_t len)

Start a new sending transfer, and wait for it (blocked) to be finished.

Return

- ESP_ERR_INVALID_ARG if the length of descriptor is not greater than 0.
- ESP_ERR_TIMEOUT if the queue is full or host do not start a transfer before timeout.
- ESP_OK if success.

Parameters

- `addr`: Start address of the buffer to send
- `len`: Length of buffer to send.

uint8_t **sdio_slave_read_reg**(int pos)

Read the spi slave register shared with host.

Note register 28 to 31 are reserved for interrupt vector.

Return value of the register.

Parameters

- `pos`: register address, 0-27 or 32-63.

esp_err_t **sdio_slave_write_reg**(int pos, uint8_t reg)

Write the spi slave register shared with host.

Note register 29 and 31 are used for interrupt vector.

Return ESP_ERR_INVALID_ARG if address wrong, otherwise ESP_OK.

Parameters

- `pos`: register address, 0-11, 14-15, 18-19, 24-27 and 32-63, other address are reserved.
- `reg`: the value to write.

sdio_slave_hostint_t **sdio_slave_get_host_intena**(void)

Get the interrupt enable for host.

Return the interrupt mask.

void **sdio_slave_set_host_intena**(*sdio_slave_hostint_t* mask)

Set the interrupt enable for host.

Parameters

- `mask`: Enable mask for host interrupt.

esp_err_t **sdio_slave_send_host_int**(uint8_t pos)

Interrupt the host by general purpose interrupt.

Return
- ESP_ERR_INVALID_ARG if interrupt num error
- ESP_OK otherwise

Parameters
- `pos`: Interrupt num, 0-7.

void **sdio_slave_clear_host_int**(*sdio_slave_hostint_t mask*)
Clear general purpose interrupt to host.

Parameters
- `mask`: Interrupt bits to clear, by bit mask.

esp_err_t **sdio_slave_wait_int**(int *pos*, TickType_t *wait*)
Wait for general purpose interrupt from host.

Note this clears the interrupt at the same time.
Return ESP_OK if success, ESP_ERR_TIMEOUT if timeout.
Parameters
- `pos`: Interrupt source number to wait for. is set.
- `wait`: Time to wait before interrupt triggered.

Structures

struct sdio_slave_config_t
Configuration of SDIO slave.

Public Members

sdio_slave_timing_t **timing**
timing of sdio_slave. see `sdio_slave_timing_t`.

sdio_slave_sending_mode_t **sending_mode**
mode of sdio_slave. `SDIO_SLAVE_MODE_STREAM` if the data needs to be sent as much as possible; `SDIO_SLAVE_MODE_PACKET` if the data should be sent in packets.

int **send_queue_size**
max buffers that can be queued before sending.

size_t **recv_buffer_size**
If buffer_size is too small, it costs more CPU time to handle larger number of buffers. If buffer_size is too large, the space larger than the transaction length is left blank but still counts a buffer, and the buffers are easily run out. Should be set according to length of data really transferred. All data that do not fully fill a buffer is still counted as one buffer. E.g. 10 bytes data costs 2 buffers if the size is 8 bytes per buffer. Buffer size of the slave pre-defined between host and slave before communication. All receive buffer given to the driver should be larger than this.

sdio_event_cb_t **event_cb**
when the host interrupts slave, this callback will be called with interrupt number (0-7).

uint32_t **flags**
Features to be enabled for the slave, combinations of `SDIO_SLAVE_FLAG_*`.

Macros

SDIO_SLAVE_RECV_MAX_BUFFER
SDIO_SLAVE_FLAG_DAT2_DISABLED
It is required by the SD specification that all 4 data lines should be used and pulled up even in 1-bit mode or SPI mode. However, as a feature, the user can specify this flag to make use of DAT2 pin in 1-bit mode. Note that the host cannot read CCCR registers to know we don't support 4-bit mode anymore, please do this at your own risk.

SDIO_SLAVE_FLAG_HOST_INTR_DISABLED
The DAT1 line is used as the interrupt line in SDIO protocol. However, as a feature, the user can specify this flag to make use of DAT1 pin of the slave in 1-bit mode. Note that the host has to do polling to the interrupt registers to know whether there are interrupts from the slave. And it cannot read CCCR registers to know we don't support 4-bit mode anymore, please do this at your own risk.

SDIO_SLAVE_FLAG_INTERNAL_PULLUP
Enable internal pullups for enabled pins. It is required by the SD specification that all the 4 data lines should be pulled up even in 1-bit mode or SPI mode. Note that the internal pull-ups are not sufficient for stable communication, please do connect external pull-ups on the bus. This is only for example and debug use.

Type Definitions

typedef void (***sdio_event_cb_t**)(uint8_t event)

typedef void ***sdio_slave_buf_handle_t**
Handle of a receive buffer, register a handle by calling `sdio_slave_recv_register_buf`. Use the handle to load the buffer to the driver, or call `sdio_slave_recv_unregister_buf` if it is no longer used.

2.3.14 Sigma-delta Modulation

Introduction

ESP32 has a second-order sigma-delta modulation module. This driver configures the channels of the sigma-delta module.

Functionality Overview

There are eight independent sigma-delta modulation channels identified with *`sigmadelta_channel_t`*. Each channel is capable to output the binary, hardware generated signal with the sigma-delta modulation.

Selected channel should be set up by providing configuration parameters in *`sigmadelta_config_t`* and then applying this configuration with *`sigmadelta_config()`*.

Another option is to call individual functions, that will configure all required parameters one by one:

- **Prescaler** of the sigma-delta generator - *`sigmadelta_set_prescale()`*
- **Duty** of the output signal - *`sigmadelta_set_duty()`*
- **GPIO pin** to output modulated signal - *`sigmadelta_set_pin()`*

The range of the 'duty' input parameter of *`sigmadelta_set_duty()`* is from -128 to 127 (eight bit signed integer). If zero value is set, then the output signal's duty will be about 50%, see description of *`sigmadelta_set_duty()`*.

Convert to analog signal (Optional)

Typically, if the sigma-delta signal is connected to an LED, you don't have to add any filter between them (because our eyes are a low pass filter naturally). However, if you want to check the real voltage or watch the analog waveform, you need to design an analog low pass filter. Also, it is recommended to use an active filter instead of a passive filter to gain better isolation and not lose too much voltage.

For example, you can take the following Sallen-Key topology Low Pass Filter as a reference.

Application Example

Sigma-delta Modulation example: peripherals/sigmadelta.

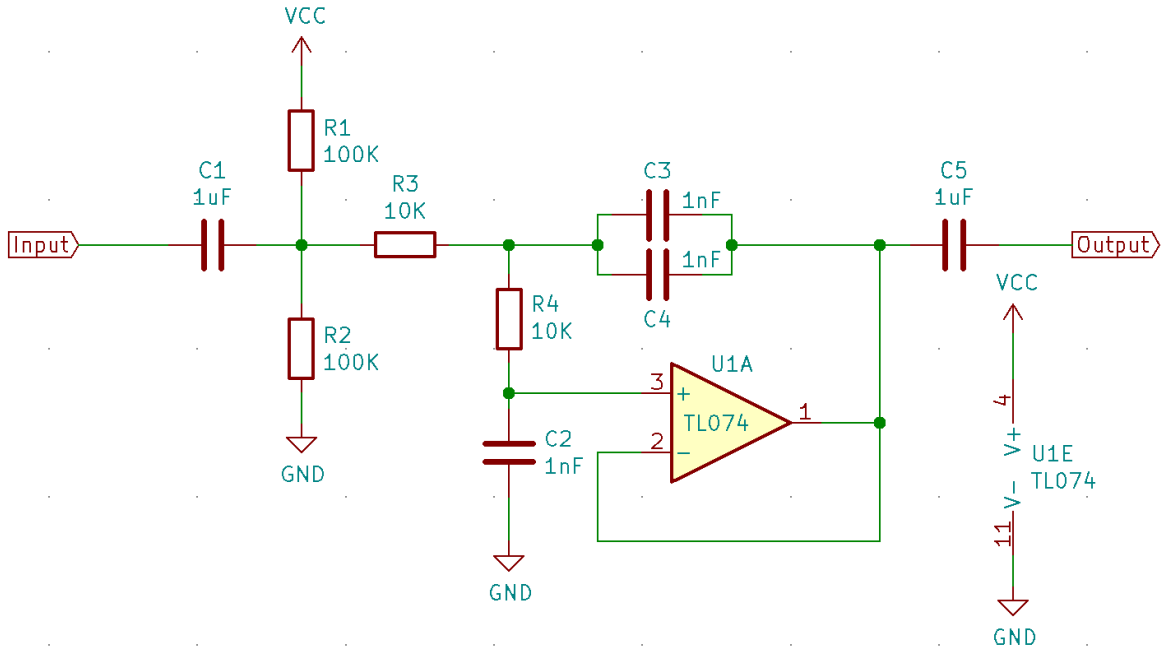

图 17: Sallen-Key Low Pass Filter

API Reference

Header File

- driver/include/driver/sigmadelta.h

Functions

esp_err_t **sigmadelta_config**(**const** *sigmadelta_config_t* **config*)

Configure Sigma-delta channel.

Return

- ESP_OK Success
- ESP_ERR_INVALID_STATE sigmadelta driver already initialized
- ESP_ERR_INVALID_ARG Parameter error

Parameters

- `config`: Pointer of Sigma-delta channel configuration struct

esp_err_t **sigmadelta_set_duty**(*sigmadelta_channel_t channel*, int8_t *duty*)

Set Sigma-delta channel duty.

This function is used to set Sigma-delta channel duty, If you add a capacitor between the output pin and ground, the average output voltage will be Vdc = VDDIO / 256 * duty + VDDIO/2, where VDDIO is the power supply voltage.

Return

- ESP_OK Success
- ESP_ERR_INVALID_STATE sigmadelta driver has not been initialized
- ESP_ERR_INVALID_ARG Parameter error

Parameters

- `channel`: Sigma-delta channel number
- `duty`: Sigma-delta duty of one channel, the value ranges from -128 to 127, recommended range is -90 ~ 90. The waveform is more like a random one in this range.

esp_err_t **sigmadelta_set_prescale**(*sigmadelta_channel_t channel*, uint8_t *prescale*)

Set Sigma-delta channel' s clock pre-scale value. The source clock is APP_CLK, 80MHz. The clock frequency

of the sigma-delta channel is APP_CLK / pre_scale.

Return
- ESP_OK Success
- ESP_ERR_INVALID_STATE sigmadelta driver has not been initialized
- ESP_ERR_INVALID_ARG Parameter error

Parameters
- `channel`: Sigma-delta channel number
- `prescale`: The divider of source clock, ranges from 0 to 255

esp_err_t **sigmadelta_set_pin** (*sigmadelta_channel_t channel*, *gpio_num_t gpio_num*)

Set Sigma-delta signal output pin.

Return
- ESP_OK Success
- ESP_ERR_INVALID_STATE sigmadelta driver has not been initialized
- ESP_ERR_INVALID_ARG Parameter error

Parameters
- `channel`: Sigma-delta channel number
- `gpio_num`: GPIO number of output pin.

Header File

- hal/include/hal/sigmadelta_types.h

Structures

struct sigmadelta_config_t

Sigma-delta configure struct.

Public Members

sigmadelta_channel_t **channel**

Sigma-delta channel number

int8_t **sigmadelta_duty**

Sigma-delta duty, duty ranges from -128 to 127.

uint8_t **sigmadelta_prescale**

Sigma-delta prescale, prescale ranges from 0 to 255.

uint8_t **sigmadelta_gpio**

Sigma-delta output io number, refer to gpio.h for more details.

Enumerations

enum sigmadelta_port_t

SIGMADELTA port number, the max port number is (SIGMADELTA_NUM_MAX -1).

Values:

SIGMADELTA_PORT_0

SIGMADELTA port 0

SIGMADELTA_PORT_MAX

SIGMADELTA port max

enum sigmadelta_channel_t

Sigma-delta channel list.

Values:

SIGMADELTA_CHANNEL_0

Sigma-delta channel 0

SIGMADELTA_CHANNEL_1
Sigma-delta channel 1

SIGMADELTA_CHANNEL_2
Sigma-delta channel 2

SIGMADELTA_CHANNEL_3
Sigma-delta channel 3

SIGMADELTA_CHANNEL_4
Sigma-delta channel 4

SIGMADELTA_CHANNEL_5
Sigma-delta channel 5

SIGMADELTA_CHANNEL_6
Sigma-delta channel 6

SIGMADELTA_CHANNEL_7
Sigma-delta channel 7

SIGMADELTA_CHANNEL_MAX
Sigma-delta channel max

2.3.15 SPI Master Driver

SPI Master driver is a program that controls ESP32's SPI peripherals while they function as masters.

Overview of ESP32's SPI peripherals

ESP32 integrates 4 SPI peripherals.

- SPI0 and SPI1 are used internally to access the ESP32's attached flash memory. Both controllers share the same SPI bus signals, and there is an arbiter to determine which can access the bus.
  There are quite a few limitations when using SPI Master driver on the SPI1 bus, see *Notes on Using the SPI Master driver on SPI1 Bus*.
- SPI2 and SPI3 are general purpose SPI controllers, sometimes referred to as HSPI and VSPI, respectively. They are open to users. SPI2 and SPI3 have independent bus signals with the same respective names. Each bus has three CS lines to drive up to same number of SPI slaves.

Terminology

The terms used in relation to the SPI master driver are given in the table below.

Term	Definition
Host	The SPI controller peripheral inside ESP32 that initiates SPI transmissions over the bus, and acts as an SPI Master.
Device	SPI slave device. An SPI bus may be connected to one or more Devices. Each Device shares the MOSI, MISO and SCLK signals but is only active on the bus when the Host asserts the Device's individual CS line.
Bus	A signal bus, common to all Devices connected to one Host. In general, a bus includes the following lines: MISO, MOSI, SCLK, one or more CS lines, and, optionally, QUADWP and QUADHD. So Devices are connected to the same lines, with the exception that each Device has its own CS line. Several Devices can also share one CS line if connected in the daisy-chain manner.
MISO	Master In, Slave Out, a.k.a. Q. Data transmission from a Device to Host.
MOSI	Master Out, Slave In, a.k.a. D. Data transmission from a Host to Device.
SCLK	Serial Clock. Oscillating signal generated by a Host that keeps the transmission of data bits in sync.
CS	Chip Select. Allows a Host to select individual Device(s) connected to the bus in order to send or receive data.
QUADWP	Write Protect signal. Only used for 4-bit (qio/qout) transactions.
QUADHD	Hold signal. Only used for 4-bit (qio/qout) transactions.
Assertion	The action of activating a line.
De-assertion	The action of returning the line back to inactive (back to idle) status.
Transaction	One instance of a Host asserting a CS line, transferring data to and from a Device, and de-asserting the CS line. Transactions are atomic, which means they can never be interrupted by another transaction.
Launch edge	Edge of the clock at which the source register *launches* the signal onto the line.
Latch edge	Edge of the clock at which the destination register *latches in* the signal.

Driver Features

The SPI master driver governs communications of Hosts with Devices. The driver supports the following features:

- Multi-threaded environments
- Transparent handling of DMA transfers while reading and writing data
- Automatic time-division multiplexing of data coming from different Devices on the same signal bus, see *SPI Bus Lock*.

警告： The SPI master driver has the concept of multiple Devices connected to a single bus (sharing a single ESP32 SPI peripheral). As long as each Device is accessed by only one task, the driver is thread safe. However, if multiple tasks try to access the same SPI Device, the driver is **not thread-safe**. In this case, it is recommended to either:

- Refactor your application so that each SPI peripheral is only accessed by a single task at a time.
- Add a mutex lock around the shared Device using `xSemaphoreCreateMutex`.

SPI Features

SPI Master

SPI Bus Lock To realize the multiplexing of different devices from different drivers (SPI Master, SPI Flash, etc.), an SPI bus lock is applied on each SPI bus. Drivers can attach their devices onto the bus with the arbitration of the

lock.

Each bus lock are initialized with a BG (background) service registered, all devices request to do transactions on the bus should wait until the BG to be successfully disabled.

- For SPI1 bus, the BG is the cache, the bus lock will help to disable the cache before device operations starts, and enable it again after device releasing the lock. No devices on SPI1 is allowed using ISR (it's meaningless for the task to yield to other tasks when the cache is disabled).
  There are quite a few limitations when using SPI Master driver on the SPI1 bus, see *Notes on Using the SPI Master driver on SPI1 Bus*.
- For other buses, the driver may register its ISR as the BG. The bus lock will block a device task when it requests for exclusive use of the bus, try to disable the ISR, and unblock the device task allowed to exclusively use the bus when the ISR is successfully disabled. When the task releases the lock, the lock will also try to resume the ISR if there are pending transactions to be done in the ISR.

SPI Transactions

An SPI bus transaction consists of five phases which can be found in the table below. Any of these phases can be skipped.

Phase	Description
Command	In this phase, a command (0-16 bit) is written to the bus by the Host.
Address	In this phase, an address (0-64 bit) is transmitted over the bus by the Host.
Write	Host sends data to a Device. This data follows the optional command and address phases and is indistinguishable from them at the electrical level.
Dummy	This phase is configurable and is used to meet the timing requirements.
Read	Device sends data to its Host.

The attributes of a transaction are determined by the bus configuration structure *spi_bus_config_t*, device configuration structure *spi_device_interface_config_t*, and transaction configuration structure *spi_transaction_t*.

An SPI Host can send full-duplex transactions, during which the read and write phases occur simultaneously. The total transaction length is determined by the sum of the following members:

- *spi_device_interface_config_t::command_bits*
- *spi_device_interface_config_t::address_bits*
- *spi_transaction_t::length*

While the member *spi_transaction_t::rxlength* only determines the length of data received into the buffer.

In half-duplex transactions, the read and write phases are not simultaneous (one direction at a time). The lengths of the write and read phases are determined by `length` and `rxlength` members of the struct *spi_transaction_t* respectively.

The command and address phases are optional, as not every SPI device requires a command and/or address. This is reflected in the Device's configuration: if `command_bits` and/or `address_bits` are set to zero, no command or address phase will occur.

The read and write phases can also be optional, as not every transaction requires both writing and reading data. If `rx_buffer` is NULL and `SPI_TRANS_USE_RXDATA` is not set, the read phase is skipped. If `tx_buffer` is NULL and `SPI_TRANS_USE_TXDATA` is not set, the write phase is skipped.

The driver supports two types of transactions: the interrupt transactions and polling transactions. The programmer can choose to use a different transaction type per Device. If your Device requires both transaction types, see *Notes on Sending Mixed Transactions to the Same Device*.

Interrupt Transactions Interrupt transactions will block the transaction routine until the transaction completes, thus allowing the CPU to run other tasks.

An application task can queue multiple transactions, and the driver will automatically handle them one-by-one in the interrupt service routine (ISR). It allows the task to switch to other procedures until all the transactions complete.

Polling Transactions Polling transactions do not use interrupts. The routine keeps polling the SPI Host' s status bit until the transaction is finished.

All the tasks that use interrupt transactions can be blocked by the queue. At this point, they will need to wait for the ISR to run twice before the transaction is finished. Polling transactions save time otherwise spent on queue handling and context switching, which results in smaller transaction duration. The disadvantage is that the CPU is busy while these transactions are in progress.

The *spi_device_polling_end()* routine needs an overhead of at least 1 us to unblock other tasks when the transaction is finished. It is strongly recommended to wrap a series of polling transactions using the functions *spi_device_acquire_bus()* and *spi_device_release_bus()* to avoid the overhead. For more information, see *Bus Acquiring*.

Command and Address Phases During the command and address phases, the members `cmd` and `addr` in the struct *spi_transaction_t* are sent to the bus, nothing is read at this time. The default lengths of the command and address phases are set in *spi_device_interface_config_t* by calling *spi_bus_add_device()*. If the flags `SPI_TRANS_VARIABLE_CMD` and `SPI_TRANS_VARIABLE_ADDR` in the member *spi_transaction_t::flags* are not set, the driver automatically sets the length of these phases to default values during Device initialization.

If the lengths of the command and address phases need to be variable, declare the struct *spi_transaction_ext_t*, set the flags `SPI_TRANS_VARIABLE_CMD` and/or `SPI_TRANS_VARIABLE_ADDR` in the member *spi_transaction_ext_t::base* and configure the rest of base as usual. Then the length of each phase will be equal to `command_bits` and `address_bits` set in the struct *spi_transaction_ext_t*.

Write and Read Phases Normally, the data that needs to be transferred to or from a Device will be read from or written to a chunk of memory indicated by the members `rx_buffer` and `tx_buffer` of the structure *spi_transaction_t*. If DMA is enabled for transfers, the buffers are required to be:

1. Allocated in DMA-capable internal memory. If *external PSRAM is enabled*, this means using `pvPortMallocCaps(size, MALLOC_CAP_DMA)`.
2. 32-bit aligned (staring from a 32-bit boundary and having a length of multiples of 4 bytes).

If these requirements are not satisfied, the transaction efficiency will be affected due to the allocation and copying of temporary buffers.

注解: Half-duplex transactions with both read and write phases are not supported when using DMA. For details and workarounds, see *Known Issues*.

Bus Acquiring Sometimes you might want to send SPI transactions exclusively and continuously so that it takes as little time as possible. For this, you can use bus acquiring, which helps to suspend transactions (both polling or interrupt) to other devices until the bus is released. To acquire and release a bus, use the functions *spi_device_acquire_bus()* and *spi_device_release_bus()*.

Driver Usage

- Initialize an SPI bus by calling the function *spi_bus_initialize()*. Make sure to set the correct I/O pins in the struct *spi_bus_config_t*. Set the signals that are not needed to `-1`.

- Register a Device connected to the bus with the driver by calling the function *spi_bus_add_device()*. Make sure to configure any timing requirements the device might need with the parameter dev_config. You should now have obtained the Device's handle which will be used when sending a transaction to it.
- To interact with the Device, fill one or more *spi_transaction_t* structs with any transaction parameters required. Then send the structs either using a polling transaction or an interrupt transaction:
  - ***Interrupt*** Either queue all transactions by calling the function *spi_device_queue_trans()* and, at a later time, query the result using the function *spi_device_get_trans_result()*, or handle all requests synchronously by feeding them into *spi_device_transmit()*.
  - ***Polling*** Call the function *spi_device_polling_transmit()* to send polling transactions. Alternatively, if you want to insert something in between, send the transactions by using *spi_device_polling_start()* and *spi_device_polling_end()*.
- (Optional) To perform back-to-back transactions with a Device, call the function *spi_device_acquire_bus()* before sending transactions and *spi_device_release_bus()* after the transactions have been sent.
- (Optional) To unload the driver for a certain Device, call *spi_bus_remove_device()* with the Device handle as an argument.
- (Optional) To remove the driver for a bus, make sure no more drivers are attached and call *spi_bus_free()*.

The example code for the SPI master driver can be found in the peripherals/spi_master directory of ESP-IDF examples.

Transactions with Data Not Exceeding 32 Bits When the transaction data size is equal to or less than 32 bits, it will be sub-optimal to allocate a buffer for the data. The data can be directly stored in the transaction struct instead. For transmitted data, it can be achieved by using the tx_data member and setting the SPI_TRANS_USE_TXDATA flag on the transmission. For received data, use rx_data and set SPI_TRANS_USE_RXDATA. In both cases, do not touch the tx_buffer or rx_buffer members, because they use the same memory locations as tx_data and rx_data.

Transactions with Integers Other Than uint8_t An SPI Host reads and writes data into memory byte by byte. By default, data is sent with the most significant bit (MSB) first, as LSB first used in rare cases. If a value less than 8 bits needs to be sent, the bits should be written into memory in the MSB first manner.

For example, if 0b00010 needs to be sent, it should be written into a uint8_t variable, and the length for reading should be set to 5 bits. The Device will still receive 8 bits with 3 additional "random" bits, so the reading must be performed correctly.

On top of that, ESP32 is a little-endian chip, which means that the least significant byte of uint16_t and uint32_t variables is stored at the smallest address. Hence, if uint16_t is stored in memory, bits [7:0] are sent first, followed by bits [15:8].

For cases when the data to be transmitted has the size differing from uint8_t arrays, the following macros can be used to transform data to the format that can be sent by the SPI driver directly:

- *SPI_SWAP_DATA_TX* for data to be transmitted
- *SPI_SWAP_DATA_RX* for data received

Notes on Sending Mixed Transactions to the Same Device To reduce coding complexity, send only one type of transactions (interrupt or polling) to one Device. However, you still can send both interrupt and polling transactions alternately. The notes below explain how to do this.

The polling transactions should be initiated only after all the polling and interrupt transactions are finished.

Since an unfinished polling transaction blocks other transactions, please do not forget to call the function *spi_device_polling_end()* after *spi_device_polling_start()* to allow other transactions or to allow other Devices to use the bus. Remember that if there is no need to switch to other tasks during your polling transaction, you can initiate a transaction with *spi_device_polling_transmit()* so that it will be ended automatically.

In-flight polling transactions are disturbed by the ISR operation to accommodate interrupt transactions. Always make sure that all the interrupt transactions sent to the ISR are finished before you call `spi_device_polling_start()`. To do that, you can keep calling `spi_device_get_trans_result()` until all the transactions are returned.

To have better control of the calling sequence of functions, send mixed transactions to the same Device only within a single task.

Notes on Using the SPI Master driver on SPI1 Bus

注解： Though the *SPI Bus Lock* feature makes it possible to use SPI Master driver on the SPI1 bus, it's still tricky and needs a lot of special treatment. It's a feature for advanced developers.

To use SPI Master driver on SPI1 bus, you have to take care of two problems:

1. The code and data, required at the meanwhile the driver is operating SPI1 bus, should be in the internal memory. SPI1 bus is shared among devices and the cache for data (code) in the Flash as well as the PSRAM. The cache should be disabled during the other drivers are operating the SPI1 bus. Hence the data (code) in the flash as well as the PSRAM cannot be fetched at the meanwhile the driver acquires the SPI1 bus by:
   - Explicit bus acquiring between `spi_device_acquire_bus()` and `spi_device_release_bus()`.
   - Implicit bus acquiring between `spi_device_polling_start()` and `spi_device_polling_end()` (or inside `spi_device_polling_transmit()`).

   During the time above, all other tasks and most ISRs will be disabled (see *IRAM 安全中断处理程序*). Application code and data used by current task should be placed in internal memory (DRAM or IRAM), or already in the ROM. Access to external memory (flash code, const data in the flash, and static/heap data in the PSRAM) will cause a *Cache disabled but cached memory region accessed* exception. For differences between IRAM, DRAM, and flash cache, please refer to the *application memory layout* documentation.
   To place functions into the IRAM, you can either:
   1. Add *IRAM_ATTR* (include "esp_attr.h") to the function like:
      IRAM_ATTR void foo(void) { }
      Please note that when a function is inlined, it will follow its caller's segment, and the attribute will not take effect. You may need to use *NOLINE_ATTR* to avoid this.
   2. Use the *noflash* placement in the *linker.lf*. See more in 链接脚本生成机制. Please note that, some code may be transformed into lookup table in the const data by the compiler, so *noflash_text* is not safe.

   Please do take care that the optimization level may affect the compiler behavior of inline, or transforming some code into lookup table in the const data, etc.
   To place data into the DRAM, you can either:
   1. Add *DRAM_ATTR* (include "esp_attr.h") to the data definition like:
      DRAM_ATTR int g_foo = 3;
   2. Use the *noflash* placement in the linker.lf. See more in 链接脚本生成机制.

Please also see the example peripherals/spi_master/hd_eeprom.

GPIO Matrix and IO_MUX Most of ESP32's peripheral signals have direct connection to their dedicated IO_MUX pins. However, the signals can also be routed to any other available pins using the less direct GPIO matrix. If at least one signal is routed through the GPIO matrix, then all signals will be routed through it.

The GPIO matrix introduces flexibility of routing but also brings the following disadvantages:

- Increases the input delay of the MISO signal, which makes MISO setup time violations more likely. If SPI needs to operate at high speeds, use dedicated IO_MUX pins.
- Allows signals with clock frequencies only up to 40 MHz, as opposed to 80 MHz if IO_MUX pins are used.

注解： For more details about the influence of the MISO input delay on the maximum clock frequency, see *Timing Considerations*.

The IO_MUX pins for SPI buses are given below.

Pin Name	SPI2	SPI3
	GPIO Number	
CS0*	15	5
SCLK	14	18
MISO	12	19
MOSI	13	23
QUADWP	2	22
QUADHD	4	21

- Only the first Device attached to the bus can use the CS0 pin.

Transfer Speed Considerations

There are three factors limiting the transfer speed:

- Transaction interval
- SPI clock frequency
- Cache miss of SPI functions, including callbacks

The main parameter that determines the transfer speed for large transactions is clock frequency. For multiple small transactions, the transfer speed is mostly determined by the length of transaction intervals.

Transaction Duration Transaction duration includes setting up SPI peripheral registers, copying data to FIFOs or setting up DMA links, and the time for SPI transaction.

Interrupt transactions allow appending extra overhead to accommodate the cost of FreeRTOS queues and the time needed for switching between tasks and the ISR.

For **interrupt transactions**, the CPU can switch to other tasks when a transaction is in progress. This saves the CPU time but increases the transaction duration. See *Interrupt Transactions*. For **polling transactions**, it does not block the task but allows to do polling when the transaction is in progress. For more information, see *Polling Transactions*.

If DMA is enabled, setting up the linked list requires about 2 us per transaction. When a master is transferring data, it automatically reads the data from the linked list. If DMA is not enabled, the CPU has to write and read each byte from the FIFO by itself. Usually, this is faster than 2 us, but the transaction length is limited to 64 bytes for both write and read.

Typical transaction duration for one byte of data are given below.

- Interrupt Transaction via DMA: 28 µs.
- Interrupt Transaction via CPU: 25 µs.
- Polling Transaction via DMA: 10 µs.
- Polling Transaction via CPU: 8 µs.

SPI Clock Frequency Transferring each byte takes eight times the clock period *8/fspi*.

If the clock frequency is too high, the use of some functions might be limited. See *Timing Considerations*.

Cache Miss The default config puts only the ISR into the IRAM. Other SPI related functions, including the driver itself and the callback, might suffer from cache misses and will need to wait until the code is read from flash. Select *CONFIG_SPI_MASTER_IN_IRAM* to put the whole SPI driver into IRAM and put the entire callback(s) and its callee functions into IRAM to prevent cache misses.

For an interrupt transaction, the overall cost is *20+8n/Fspi[MHz]* [us] for n bytes transferred in one transaction. Hence, the transferring speed is: *n/(20+8n/Fspi)*. An example of transferring speed at 8 MHz clock speed is given in the following table.

Frequency (MHz)	Transaction Interval (us)	Transaction Length (bytes)	Total Time (us)	Total Speed (KBps)
8	25	1	26	38.5
8	25	8	33	242.4
8	25	16	41	490.2
8	25	64	89	719.1
8	25	128	153	836.6

When a transaction length is short, the cost of transaction interval is high. If possible, try to squash several short transactions into one transaction to achieve a higher transfer speed.

Please note that the ISR is disabled during flash operation by default. To keep sending transactions during flash operations, enable *CONFIG_SPI_MASTER_ISR_IN_IRAM* and set `ESP_INTR_FLAG_IRAM` in the member `spi_bus_config_t::intr_flags`. In this case, all the transactions queued before starting flash operations will be handled by the ISR in parallel. Also note that the callback of each Device and their callee functions should be in IRAM, or your callback will crash due to cache miss. For more details, see *IRAM 安全中断处理程序*.

Timing Considerations

As shown in the figure below, there is a delay on the MISO line after the SCLK launch edge and before the signal is latched by the internal register. As a result, the MISO pin setup time is the limiting factor for the SPI clock speed. When the delay is too long, the setup slack is < 0, which means the setup timing requirement is violated and the reading might be incorrect.

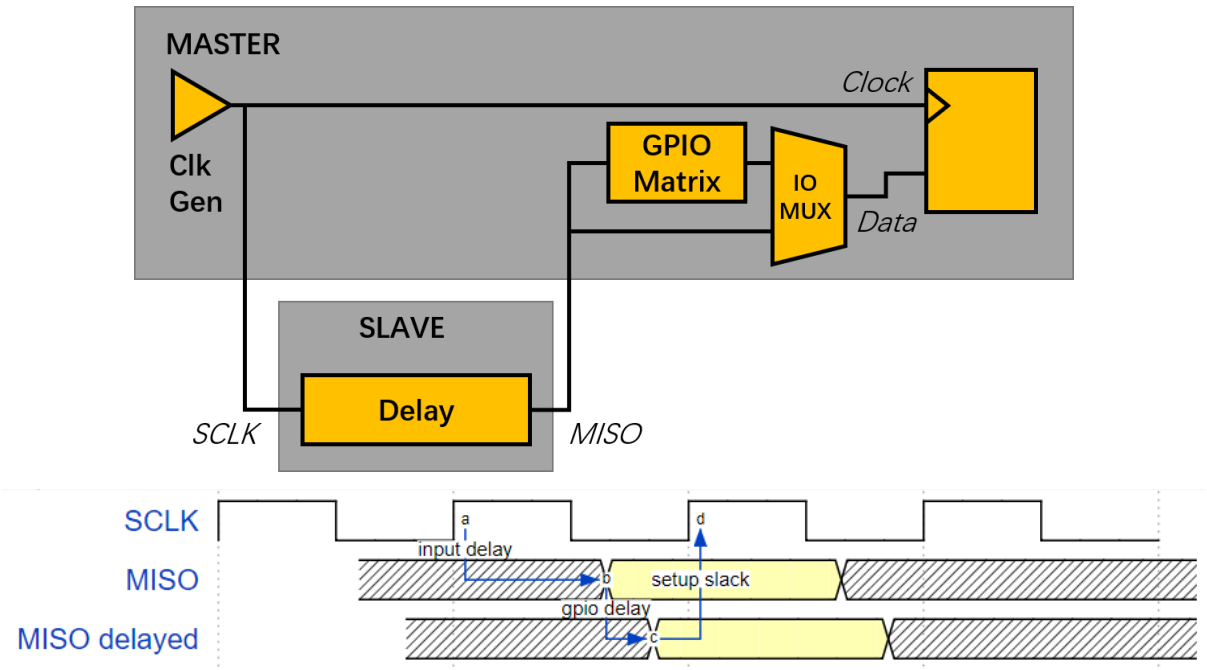

The maximum allowed frequency is dependent on:

- `input_delay_ns` - maximum data valid time on the MISO bus after a clock cycle on SCLK starts
- If the IO_MUX pin or the GPIO Matrix is used

When the GPIO matrix is used, the maximum allowed frequency is reduced to about 33~77% in comparison to the existing *input delay*. To retain a higher frequency, you have to use the IO_MUX pins or the *dummy bit workaround*. You can obtain the maximum reading frequency of the master by using the function `spi_get_freq_limit()`.

Dummy bit workaround: Dummy clocks, during which the Host does not read data, can be inserted before the read phase begins. The Device still sees the dummy clocks and sends out data, but the Host does not read until the read phase comes. This compensates for the lack of the MISO setup time required by the Host and allows the Host to do reading at a higher frequency.

In the ideal case, if the Device is so fast that the input delay is shorter than an APB clock cycle - 12.5 ns - the maximum frequency at which the Host can read (or read and write) in different conditions is as follows:

Frequency Limit (MHz)		Dummy Bits Used By Driver	Comments
GPIO matrix	IO_MUX pins		
26.6	80	No	
40	–	Yes	Half-duplex, no DMA allowed

If the Host only writes data, the *dummy bit workaround* and the frequency check can be disabled by setting the bit *SPI_DEVICE_NO_DUMMY* in the member *spi_device_interface_config_t::flags*. When disabled, the output frequency can be 80MHz, even if the GPIO matrix is used.

spi_device_interface_config_t::flags

The SPI master driver still works even if the `input_delay_ns` in the structure *spi_device_interface_config_t* is set to 0. However, setting an accurate value helps to:

- Calculate the frequency limit for full-duplex transactions
- Compensate the timing correctly with dummy bits for half-duplex transactions

You can approximate the maximum data valid time after the launch edge of SPI clocks by checking the statistics in the AC characteristics chapter of your Device's specification or measure the time using an oscilloscope or logic analyzer.

Please note that the actual PCB layout design and excessive loads may increase the input delay. It means that non-optimal wiring and/or a load capacitor on the bus will most likely lead to input delay values exceeding the values given in the Device specification or measured while the bus is floating.

Some typical delay values are shown in the following table. (These data are retrieved when the slave device is on a different physical chip)

Device	Input delay (ns)
Ideal Device	0
ESP32 slave using IO_MUX*	50
ESP32 slave using GPIO_MUX*	75

The MISO path delay (valid time) consists of a slave's *input delay* plus master's *GPIO matrix delay*. This delay determines the frequency limit above which full-duplex transfers will not work as well as the dummy bits used in the half-duplex transactions. The frequency limit is:

Freq limit [MHz] = 80 / (floor(MISO delay[ns]/12.5) + 1)

The figure below shows the relationship between frequency limit and input delay. Two extra APB clock cycle periods should be added to the MISO delay if the master uses the GPIO matrix.

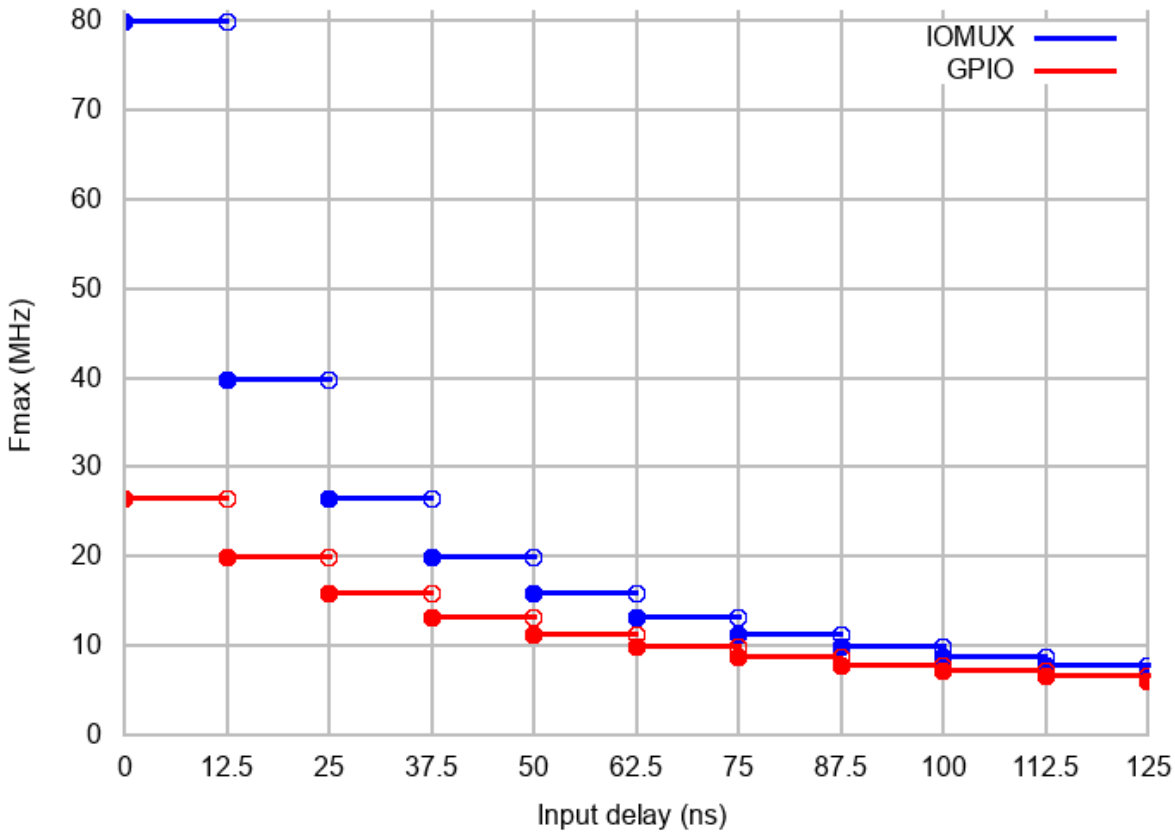

Corresponding frequency limits for different Devices with different *input delay* times are shown in the table below.

Master	Input delay (ns)	MISO path delay (ns)	Freq. limit (MHz)
IO_MUX (0ns)	0	0	80
	50	50	16
	75	75	11.43
GPIO (25ns)	0	25	26.67
	50	75	11.43
	75	100	8.89

Known Issues

1. Half-duplex transactions are not compatible with DMA when both writing and reading phases are used.
   If such transactions are required, you have to use one of the alternative solutions:
   1. Use full-duplex transactions instead.
   2. **Disable DMA by setting the bus initialization function' s last parameter to 0 as follows:**
      ```
      ret=spi_bus_initialize(VSPI_HOST, &buscfg, 0);
      ```
   This can prohibit you from transmitting and receiving data longer than 64 bytes. 3. Try using the command and address fields to replace the write phase.
2. Full-duplex transactions are not compatible with the *dummy bit workaround*, hence the frequency is limited. See *dummy bit speed-up workaround*.
3. `dummy_bits` in *`spi_device_interface_config_t`* and *`spi_transaction_ext_t`* are not available when SPI read and write phases are both enabled (regardless of full duplex or half duplex mode).
4. `cs_ena_pretrans` is not compatible with the command and address phases of full-duplex transactions.

Application Example

The code example for displaying graphics on an ESP32-WROVER-KIT’ s 320x240 LCD screen can be found in the peripherals/spi_master directory of ESP-IDF examples.

API Reference - SPI Common

Header File

- hal/include/hal/spi_types.h

Structures

struct spi_line_mode_t

Line mode of SPI transaction phases: CMD, ADDR, DOUT/DIN.

Public Members

uint8_t **cmd_lines**

The line width of command phase, e.g. 2-line-cmd-phase.

uint8_t **addr_lines**

The line width of address phase, e.g. 1-line-addr-phase.

uint8_t **data_lines**

The line width of data phase, e.g. 4-line-data-phase.

Enumerations

enum spi_host_device_t

Enum with the three SPI peripherals that are software-accessible in it.

Values:

SPI1_HOST = 0

SPI1.

SPI2_HOST = 1

SPI2.

SPI3_HOST = 2

SPI3.

enum spi_event_t

SPI Events.

Values:

SPI_EV_BUF_TX = BIT(0)

The buffer has sent data to master.

SPI_EV_BUF_RX = BIT(1)

The buffer has received data from master.

SPI_EV_SEND_DMA_READY = BIT(2)

Slave has loaded its TX data buffer to the hardware (DMA).

SPI_EV_SEND = BIT(3)

Master has received certain number of the data, the number is determined by Master.

SPI_EV_RECV_DMA_READY = BIT(4)

Slave has loaded its RX data buffer to the hardware (DMA).

SPI_EV_RECV = BIT(5)

Slave has received certain number of data from master, the number is determined by Master.

SPI_EV_CMD9 = BIT(6)
Received CMD9 from master.

SPI_EV_CMDA = BIT(7)
Received CMDA from master.

SPI_EV_TRANS = BIT(8)
A transaction has done.

enum spi_command_t
SPI command.

Values:

SPI_CMD_HD_WRBUF = BIT(0)

SPI_CMD_HD_RDBUF = BIT(1)

SPI_CMD_HD_WRDMA = BIT(2)

SPI_CMD_HD_RDDMA = BIT(3)

SPI_CMD_HD_SEG_END = BIT(4)

SPI_CMD_HD_EN_QPI = BIT(5)

SPI_CMD_HD_WR_END = BIT(6)

SPI_CMD_HD_INT0 = BIT(7)

SPI_CMD_HD_INT1 = BIT(8)

SPI_CMD_HD_INT2 = BIT(9)

Header File

- driver/include/driver/spi_common.h

Functions

esp_err_t **spi_bus_initialize**(*spi_host_device_t host_id*, **const** *spi_bus_config_t *bus_config*, *spi_dma_chan_t dma_chan*)
Initialize a SPI bus.

Warning SPI0/1 is not supported
Warning If a DMA channel is selected, any transmit and receive buffer used should be allocated in DMA-capable memory.
Warning The ISR of SPI is always executed on the core which calls this function. Never starve the ISR on this core or the SPI transactions will not be handled.
Return
- ESP_ERR_INVALID_ARG if configuration is invalid
- ESP_ERR_INVALID_STATE if host already is in use
- ESP_ERR_NOT_FOUND if there is no available DMA channel
- ESP_ERR_NO_MEM if out of memory
- ESP_OK on success

Parameters
- `host_id`: SPI peripheral that controls this bus
- `bus_config`: Pointer to a *spi_bus_config_t* struct specifying how the host should be initialized
- `dma_chan`: - Selecting a DMA channel for an SPI bus allows transactions on the bus with size only limited by the amount of internal memory.
  - Selecting SPI_DMA_DISABLED limits the size of transactions.
  - Set to SPI_DMA_DISABLED if only the SPI flash uses this bus.
  - Set to SPI_DMA_CH_AUTO to let the driver to allocate the DMA channel.

esp_err_t **spi_bus_free**(*spi_host_device_t host_id*)
Free a SPI bus.

Warning In order for this to succeed, all devices have to be removed first.

Return

- ESP_ERR_INVALID_ARG if parameter is invalid
- ESP_ERR_INVALID_STATE if bus hasn't been initialized before, or not all devices on the bus are freed
- ESP_OK on success

Parameters

- `host_id`: SPI peripheral to free

Structures

`struct spi_bus_config_t`

This is a configuration structure for a SPI bus.

You can use this structure to specify the GPIO pins of the bus. Normally, the driver will use the GPIO matrix to route the signals. An exception is made when all signals either can be routed through the IO_MUX or are -1. In that case, the IO_MUX is used, allowing for >40MHz speeds.

Note Be advised that the slave driver does not use the quadwp/quadhd lines and fields in *spi_bus_config_t* refering to these lines will be ignored and can thus safely be left uninitialized.

Public Members

int **`mosi_io_num`**

GPIO pin for Master Out Slave In (=spi_d) signal, or -1 if not used.

int **`miso_io_num`**

GPIO pin for Master In Slave Out (=spi_q) signal, or -1 if not used.

int **`sclk_io_num`**

GPIO pin for Spi CLocK signal, or -1 if not used.

int **`quadwp_io_num`**

GPIO pin for WP (Write Protect) signal which is used as D2 in 4-bit communication modes, or -1 if not used.

int **`quadhd_io_num`**

GPIO pin for HD (HolD) signal which is used as D3 in 4-bit communication modes, or -1 if not used.

int **`max_transfer_sz`**

Maximum transfer size, in bytes. Defaults to 4092 if 0 when DMA enabled, or to `SOC_SPI_MAXIMUM_BUFFER_SIZE` if DMA is disabled.

uint32_t **`flags`**

Abilities of bus to be checked by the driver. Or-ed value of `SPICOMMON_BUSFLAG_*` flags.

int **`intr_flags`**

Interrupt flag for the bus to set the priority, and IRAM attribute, see `esp_intr_alloc.h`. Note that the EDGE, INTRDISABLED attribute are ignored by the driver. Note that if ESP_INTR_FLAG_IRAM is set, ALL the callbacks of the driver, and their callee functions, should be put in the IRAM.

Macros

`SPI_MAX_DMA_LEN`

`SPI_SWAP_DATA_TX`(DATA, LEN)

Transform unsigned integer of length <= 32 bits to the format which can be sent by the SPI driver directly.

E.g. to send 9 bits of data, you can:

```
uint16_t data = SPI_SWAP_DATA_TX(0x145, 9);
```

Then points tx_buffer to `&data`.

Parameters

- DATA: Data to be sent, can be uint8_t, uint16_t or uint32_t.
- LEN: Length of data to be sent, since the SPI peripheral sends from the MSB, this helps to shift the data to the MSB.

SPI_SWAP_DATA_RX(DATA, LEN)

Transform received data of length <= 32 bits to the format of an unsigned integer.

E.g. to transform the data of 15 bits placed in a 4-byte array to integer:

```
uint16_t data = SPI_SWAP_DATA_RX(*(uint32_t*)t->rx_data, 15);
```

Parameters

- DATA: Data to be rearranged, can be uint8_t, uint16_t or uint32_t.
- LEN: Length of data received, since the SPI peripheral writes from the MSB, this helps to shift the data to the LSB.

SPICOMMON_BUSFLAG_SLAVE

Initialize I/O in slave mode.

SPICOMMON_BUSFLAG_MASTER

Initialize I/O in master mode.

SPICOMMON_BUSFLAG_IOMUX_PINS

Check using iomux pins. Or indicates the pins are configured through the IO mux rather than GPIO matrix.

SPICOMMON_BUSFLAG_GPIO_PINS

Force the signals to be routed through GPIO matrix. Or indicates the pins are routed through the GPIO matrix.

SPICOMMON_BUSFLAG_SCLK

Check existing of SCLK pin. Or indicates CLK line initialized.

SPICOMMON_BUSFLAG_MISO

Check existing of MISO pin. Or indicates MISO line initialized.

SPICOMMON_BUSFLAG_MOSI

Check existing of MOSI pin. Or indicates MOSI line initialized.

SPICOMMON_BUSFLAG_DUAL

Check MOSI and MISO pins can output. Or indicates bus able to work under DIO mode.

SPICOMMON_BUSFLAG_WPHD

Check existing of WP and HD pins. Or indicates WP & HD pins initialized.

SPICOMMON_BUSFLAG_QUAD

Check existing of MOSI/MISO/WP/HD pins as output. Or indicates bus able to work under QIO mode.

SPICOMMON_BUSFLAG_NATIVE_PINS

Type Definitions

typedef *spi_common_dma_t* **spi_dma_chan_t**

Enumerations

enum spi_common_dma_t

SPI DMA channels.

Values:

SPI_DMA_DISABLED = 0

Do not enable DMA for SPI.

SPI_DMA_CH1 = 1

Enable DMA, select DMA Channel 1.

SPI_DMA_CH2 = 2

Enable DMA, select DMA Channel 2.

SPI_DMA_CH_AUTO = 3
Enable DMA, channel is automatically selected by driver.

API Reference - SPI Master

Header File

- driver/include/driver/spi_master.h

Functions

esp_err_t **spi_bus_add_device**(*spi_host_device_t host_id*, **const** *spi_device_interface_config_t *dev_config*, *spi_device_handle_t *handle*)

Allocate a device on a SPI bus.

This initializes the internal structures for a device, plus allocates a CS pin on the indicated SPI master peripheral and routes it to the indicated GPIO. All SPI master devices have three CS pins and can thus control up to three devices.

Note While in general, speeds up to 80MHz on the dedicated SPI pins and 40MHz on GPIO-matrix-routed pins are supported, full-duplex transfers routed over the GPIO matrix only support speeds up to 26MHz.

Return
- ESP_ERR_INVALID_ARG if parameter is invalid
- ESP_ERR_NOT_FOUND if host doesn't have any free CS slots
- ESP_ERR_NO_MEM if out of memory
- ESP_OK on success

Parameters
- `host_id`: SPI peripheral to allocate device on
- `dev_config`: SPI interface protocol config for the device
- `handle`: Pointer to variable to hold the device handle

esp_err_t **spi_bus_remove_device**(*spi_device_handle_t handle*)

Remove a device from the SPI bus.

Return
- ESP_ERR_INVALID_ARG if parameter is invalid
- ESP_ERR_INVALID_STATE if device already is freed
- ESP_OK on success

Parameters
- `handle`: Device handle to free

esp_err_t **spi_device_queue_trans**(*spi_device_handle_t handle*, *spi_transaction_t *trans_desc*, TickType_t *ticks_to_wait*)

Queue a SPI transaction for interrupt transaction execution. Get the result by `spi_device_get_trans_result`.

Note Normally a device cannot start (queue) polling and interrupt transactions simultaneously.

Return
- ESP_ERR_INVALID_ARG if parameter is invalid
- ESP_ERR_TIMEOUT if there was no room in the queue before ticks_to_wait expired
- ESP_ERR_NO_MEM if allocating DMA-capable temporary buffer failed
- ESP_ERR_INVALID_STATE if previous transactions are not finished
- ESP_OK on success

Parameters
- `handle`: Device handle obtained using spi_host_add_dev
- `trans_desc`: Description of transaction to execute
- `ticks_to_wait`: Ticks to wait until there's room in the queue; use portMAX_DELAY to never time out.

esp_err_t **spi_device_get_trans_result**(*spi_device_handle_t handle*, *spi_transaction_t **trans_desc*, TickType_t *ticks_to_wait*)

Get the result of a SPI transaction queued earlier by `spi_device_queue_trans`.

This routine will wait until a transaction to the given device succesfully completed. It will then return the description of the completed transaction so software can inspect the result and e.g. free the memory or re-use the buffers.

Return
- ESP_ERR_INVALID_ARG if parameter is invalid
- ESP_ERR_TIMEOUT if there was no completed transaction before ticks_to_wait expired
- ESP_OK on success

Parameters
- `handle`: Device handle obtained using spi_host_add_dev
- `trans_desc`: Pointer to variable able to contain a pointer to the description of the transaction that is executed. The descriptor should not be modified until the descriptor is returned by spi_device_get_trans_result.
- `ticks_to_wait`: Ticks to wait until there's a returned item; use portMAX_DELAY to never time out.

esp_err_t **spi_device_transmit**(*spi_device_handle_t handle*, *spi_transaction_t *trans_desc*)

Send a SPI transaction, wait for it to complete, and return the result.

This function is the equivalent of calling spi_device_queue_trans() followed by spi_device_get_trans_result(). Do not use this when there is still a transaction separately queued (started) from spi_device_queue_trans() or polling_start/transmit that hasn't been finalized.

Note This function is not thread safe when multiple tasks access the same SPI device. Normally a device cannot start (queue) polling and interrupt transactions simutanuously.

Return
- ESP_ERR_INVALID_ARG if parameter is invalid
- ESP_OK on success

Parameters
- `handle`: Device handle obtained using spi_host_add_dev
- `trans_desc`: Description of transaction to execute

esp_err_t **spi_device_polling_start**(*spi_device_handle_t handle*, *spi_transaction_t *trans_desc*, TickType_t *ticks_to_wait*)

Immediately start a polling transaction.

Note Normally a device cannot start (queue) polling and interrupt transactions simutanuously. Moreover, a device cannot start a new polling transaction if another polling transaction is not finished.

Return
- ESP_ERR_INVALID_ARG if parameter is invalid
- ESP_ERR_TIMEOUT if the device cannot get control of the bus before `ticks_to_wait` expired
- ESP_ERR_NO_MEM if allocating DMA-capable temporary buffer failed
- ESP_ERR_INVALID_STATE if previous transactions are not finished
- ESP_OK on success

Parameters
- `handle`: Device handle obtained using spi_host_add_dev
- `trans_desc`: Description of transaction to execute
- `ticks_to_wait`: Ticks to wait until there's room in the queue; currently only portMAX_DELAY is supported.

esp_err_t **spi_device_polling_end**(*spi_device_handle_t handle*, TickType_t *ticks_to_wait*)

Poll until the polling transaction ends.

This routine will not return until the transaction to the given device has succesfully completed. The task is not blocked, but actively busy-spins for the transaction to be completed.

Return
- ESP_ERR_INVALID_ARG if parameter is invalid
- ESP_ERR_TIMEOUT if the transaction cannot finish before ticks_to_wait expired
- ESP_OK on success

Parameters
- `handle`: Device handle obtained using spi_host_add_dev

- `ticks_to_wait`: Ticks to wait until there's a returned item; use portMAX_DELAY to never time out.

esp_err_t **spi_device_polling_transmit**(*spi_device_handle_t handle*, *spi_transaction_t *trans_desc*)

Send a polling transaction, wait for it to complete, and return the result.

This function is the equivalent of calling spi_device_polling_start() followed by spi_device_polling_end(). Do not use this when there is still a transaction that hasn't been finalized.

Note This function is not thread safe when multiple tasks access the same SPI device. Normally a device cannot start (queue) polling and interrupt transactions simutanuously.

Return

- ESP_ERR_INVALID_ARG if parameter is invalid
- ESP_OK on success

Parameters

- `handle`: Device handle obtained using spi_host_add_dev
- `trans_desc`: Description of transaction to execute

esp_err_t **spi_device_acquire_bus**(*spi_device_handle_t device*, TickType_t *wait*)

Occupy the SPI bus for a device to do continuous transactions.

Transactions to all other devices will be put off until `spi_device_release_bus` is called.

Note The function will wait until all the existing transactions have been sent.

Return

- ESP_ERR_INVALID_ARG : `wait` is not set to portMAX_DELAY.
- ESP_OK : Success.

Parameters

- `device`: The device to occupy the bus.
- `wait`: Time to wait before the the bus is occupied by the device. Currently MUST set to portMAX_DELAY.

void **spi_device_release_bus**(*spi_device_handle_t dev*)

Release the SPI bus occupied by the device. All other devices can start sending transactions.

Parameters

- `dev`: The device to release the bus.

int **spi_cal_clock**(int *fapb*, int *hz*, int *duty_cycle*, uint32_t **reg_o*)

Calculate the working frequency that is most close to desired frequency, and also the register value.

Parameters

- `fapb`: The frequency of apb clock, should be `APB_CLK_FREQ`.
- `hz`: Desired working frequency
- `duty_cycle`: Duty cycle of the spi clock
- `reg_o`: Output of value to be set in clock register, or NULL if not needed.

Return Actual working frequency that most fit.

int **spi_get_actual_clock**(int *fapb*, int *hz*, int *duty_cycle*)

Calculate the working frequency that is most close to desired frequency.

Return Actual working frequency that most fit.

Parameters

- `fapb`: The frequency of apb clock, should be `APB_CLK_FREQ`.
- `hz`: Desired working frequency
- `duty_cycle`: Duty cycle of the spi clock

void **spi_get_timing**(bool *gpio_is_used*, int *input_delay_ns*, int *eff_clk*, int **dummy_o*, int **cycles_remain_o*)

Calculate the timing settings of specified frequency and settings.

Note If **dummy_o* is not zero, it means dummy bits should be applied in half duplex mode, and full duplex mode may not work.

Parameters

- `gpio_is_used`: True if using GPIO matrix, or False if iomux pins are used.
- `input_delay_ns`: Input delay from SCLK launch edge to MISO data valid.
- `eff_clk`: Effective clock frequency (in Hz) from spi_cal_clock.
- `dummy_o`: Address of dummy bits used output. Set to NULL if not needed.
- `cycles_remain_o`: Address of cycles remaining (after dummy bits are used) output.
  - -1 If too many cycles remaining, suggest to compensate half a clock.
  - 0 If no remaining cycles or dummy bits are not used.
  - positive value: cycles suggest to compensate.

int **spi_get_freq_limit**(bool *gpio_is_used*, int *input_delay_ns*)

Get the frequency limit of current configurations. SPI master working at this limit is OK, while above the limit, full duplex mode and DMA will not work, and dummy bits will be aplied in the half duplex mode.

Return Frequency limit of current configurations.

Parameters

- `gpio_is_used`: True if using GPIO matrix, or False if native pins are used.
- `input_delay_ns`: Input delay from SCLK launch edge to MISO data valid.

Structures

struct spi_device_interface_config_t

This is a configuration for a SPI slave device that is connected to one of the SPI buses.

Public Members

uint8_t **command_bits**

Default amount of bits in command phase (0-16), used when `SPI_TRANS_VARIABLE_CMD` is not used, otherwise ignored.

uint8_t **address_bits**

Default amount of bits in address phase (0-64), used when `SPI_TRANS_VARIABLE_ADDR` is not used, otherwise ignored.

uint8_t **dummy_bits**

Amount of dummy bits to insert between address and data phase.

uint8_t **mode**

SPI mode, representing a pair of (CPOL, CPHA) configuration:

- 0: (0, 0)
- 1: (0, 1)
- 2: (1, 0)
- 3: (1, 1)

uint16_t **duty_cycle_pos**

Duty cycle of positive clock, in 1/256th increments (128 = 50%/50% duty). Setting this to 0 (=not setting it) is equivalent to setting this to 128.

uint16_t **cs_ena_pretrans**

Amount of SPI bit-cycles the cs should be activated before the transmission (0-16). This only works on half-duplex transactions.

uint8_t **cs_ena_posttrans**

Amount of SPI bit-cycles the cs should stay active after the transmission (0-16)

int **clock_speed_hz**

Clock speed, divisors of 80MHz, in Hz. See `SPI_MASTER_FREQ_*`.

int **input_delay_ns**

Maximum data valid time of slave. The time required between SCLK and MISO valid, including the possible clock delay from slave to master. The driver uses this value to give an extra delay before the MISO is ready on the line. Leave at 0 unless you know you need a delay. For better timing performance at high frequency (over 8MHz), it' s suggest to have the right value.

int **spics_io_num**
CS GPIO pin for this device, or -1 if not used.

uint32_t **flags**
Bitwise OR of SPI_DEVICE_* flags.

int **queue_size**
Transaction queue size. This sets how many transactions can be 'in the air' (queued using spi_device_queue_trans but not yet finished using spi_device_get_trans_result) at the same time.

transaction_cb_t **pre_cb**
Callback to be called before a transmission is started.

This callback is called within interrupt context should be in IRAM for best performance, see "Transferring Speed" section in the SPI Master documentation for full details. If not, the callback may crash during flash operation when the driver is initialized with ESP_INTR_FLAG_IRAM.

transaction_cb_t **post_cb**
Callback to be called after a transmission has completed.

This callback is called within interrupt context should be in IRAM for best performance, see "Transferring Speed" section in the SPI Master documentation for full details. If not, the callback may crash during flash operation when the driver is initialized with ESP_INTR_FLAG_IRAM.

struct spi_transaction_t
This structure describes one SPI transaction. The descriptor should not be modified until the transaction finishes.

Public Members

uint32_t **flags**
Bitwise OR of SPI_TRANS_* flags.

uint16_t **cmd**
Command data, of which the length is set in the `command_bits` of *spi_device_interface_config_t*.

NOTE: this field, used to be "command" in ESP-IDF 2.1 and before, is re-written to be used in a new way in ESP-IDF 3.0.

Example: write 0x0123 and command_bits=12 to send command 0x12, 0x3_ (in previous version, you may have to write 0x3_12).

uint64_t **addr**
Address data, of which the length is set in the `address_bits` of *spi_device_interface_config_t*.

NOTE: this field, used to be "address" in ESP-IDF 2.1 and before, is re-written to be used in a new way in ESP-IDF3.0.

Example: write 0x123400 and address_bits=24 to send address of 0x12, 0x34, 0x00 (in previous version, you may have to write 0x12340000).

size_t **length**
Total data length, in bits.

size_t **rxlength**
Total data length received, should be not greater than `length` in full-duplex mode (0 defaults this to the value of `length`).

void ***user**
User-defined variable. Can be used to store eg transaction ID.

const void ***tx_buffer**
Pointer to transmit buffer, or NULL for no MOSI phase.

uint8_t **tx_data**[4]
If SPI_TRANS_USE_TXDATA is set, data set here is sent directly from this variable.

void ***rx_buffer**
Pointer to receive buffer, or NULL for no MISO phase. Written by 4 bytes-unit if DMA is used.

uint8_t **rx_data**[4]
If SPI_TRANS_USE_RXDATA is set, data is received directly to this variable.

struct spi_transaction_ext_t
This struct is for SPI transactions which may change their address and command length. Please do set the flags in base to `SPI_TRANS_VARIABLE_CMD_ADR` to use the bit length here.

Public Members

struct *spi_transaction_t* **base**
Transaction data, so that pointer to *spi_transaction_t* can be converted into *spi_transaction_ext_t*.

uint8_t **command_bits**
The command length in this transaction, in bits.

uint8_t **address_bits**
The address length in this transaction, in bits.

uint8_t **dummy_bits**
The dummy length in this transaction, in bits.

Macros

SPI_MASTER_FREQ_8M
SPI master clock is divided by 80MHz apb clock. Below defines are example frequencies, and are accurate. Be free to specify a random frequency, it will be rounded to closest frequency (to macros below if above 8MHz). 8MHz

SPI_MASTER_FREQ_9M
8.89MHz

SPI_MASTER_FREQ_10M
10MHz

SPI_MASTER_FREQ_11M
11.43MHz

SPI_MASTER_FREQ_13M
13.33MHz

SPI_MASTER_FREQ_16M
16MHz

SPI_MASTER_FREQ_20M
20MHz

SPI_MASTER_FREQ_26M
26.67MHz

SPI_MASTER_FREQ_40M
40MHz

SPI_MASTER_FREQ_80M
80MHz

SPI_DEVICE_TXBIT_LSBFIRST
Transmit command/address/data LSB first instead of the default MSB first.

SPI_DEVICE_RXBIT_LSBFIRST
Receive data LSB first instead of the default MSB first.

SPI_DEVICE_BIT_LSBFIRST
Transmit and receive LSB first.

SPI_DEVICE_3WIRE
Use MOSI (=spid) for both sending and receiving data.

SPI_DEVICE_POSITIVE_CS
Make CS positive during a transaction instead of negative.

SPI_DEVICE_HALFDUPLEX
Transmit data before receiving it, instead of simultaneously.

SPI_DEVICE_CLK_AS_CS
Output clock on CS line if CS is active.

SPI_DEVICE_NO_DUMMY
There are timing issue when reading at high frequency (the frequency is related to whether iomux pins are used, valid time after slave sees the clock).

- In half-duplex mode, the driver automatically inserts dummy bits before reading phase to fix the timing issue. Set this flag to disable this feature.
- In full-duplex mode, however, the hardware cannot use dummy bits, so there is no way to prevent data being read from getting corrupted. Set this flag to confirm that you're going to work with output only, or read without dummy bits at your own risk.

SPI_DEVICE_DDRCLK

SPI_TRANS_MODE_DIO
Transmit/receive data in 2-bit mode.

SPI_TRANS_MODE_QIO
Transmit/receive data in 4-bit mode.

SPI_TRANS_USE_RXDATA
Receive into rx_data member of *spi_transaction_t* instead into memory at rx_buffer.

SPI_TRANS_USE_TXDATA
Transmit tx_data member of *spi_transaction_t* instead of data at tx_buffer. Do not set tx_buffer when using this.

SPI_TRANS_MODE_DIOQIO_ADDR
Also transmit address in mode selected by SPI_MODE_DIO/SPI_MODE_QIO.

SPI_TRANS_VARIABLE_CMD
Use the `command_bits` in *spi_transaction_ext_t* rather than default value in *spi_device_interface_config_t*.

SPI_TRANS_VARIABLE_ADDR
Use the `address_bits` in *spi_transaction_ext_t* rather than default value in *spi_device_interface_config_t*.

SPI_TRANS_VARIABLE_DUMMY
Use the `dummy_bits` in *spi_transaction_ext_t* rather than default value in *spi_device_interface_config_t*.

Type Definitions

typedef struct *spi_transaction_t* **spi_transaction_t**

typedef void (***transaction_cb_t**) (*spi_transaction_t* *trans)

typedef struct spi_device_t ***spi_device_handle_t**
Handle for a device on a SPI bus.

2.3.16 SPI Slave Driver

SPI Slave driver is a program that controls ESP32's SPI peripherals while they function as slaves.

Overview of ESP32’s SPI peripherals

ESP32 integrates two general purpose SPI controllers which can be used as slave nodes driven by an off-chip SPI master

- SPI2, sometimes referred to as HSPI
- SPI3, sometimes referred to as VSPI

SPI2 and SPI3 have independent signal buses with the same respective names.

Terminology

The terms used in relation to the SPI slave driver are given in the table below.

Term	Definition
Host	The SPI controller peripheral external to ESP32 that initiates SPI transmissions over the bus, and acts as an SPI Master.
Device	SPI slave device (general purpose SPI controller). Each Device shares the MOSI, MISO and SCLK signals but is only active on the bus when the Host asserts the Device’s individual CS line.
Bus	A signal bus, common to all Devices connected to one Host. In general, a bus includes the following lines: MISO, MOSI, SCLK, one or more CS lines, and, optionally, QUADWP and QUADHD. So Devices are connected to the same lines, with the exception that each Device has its own CS line. Several Devices can also share one CS line if connected in the daisy-chain manner.
• **MISO**	Master In, Slave Out, a.k.a. Q. Data transmission from a Device to Host.
• **MOSI**	Master Out, Slave in, a.k.a. D. Data transmission from a Host to Device.
• **SCLK**	Serial Clock. Oscillating signal generated by a Host that keeps the transmission of data bits in sync.
• **CS**	Chip Select. Allows a Host to select individual Device(s) connected to the bus in order to send or receive data.
• **QUADWP**	Write Protect signal. Only used for 4-bit (qio/qout) transactions.
• **QUADHD**	Hold signal. Only used for 4-bit (qio/qout) transactions.
• **Assertion**	The action of activating a line. The opposite action of returning the line back to inactive (back to idle) is called *de-assertion*.
Transaction	One instance of a Host asserting a CS line, transferring data to and from a Device, and de-asserting the CS line. Transactions are atomic, which means they can never be interrupted by another transaction.
Launch edge	Edge of the clock at which the source register *launches* the signal onto the line.
Latch edge	Edge of the clock at which the destination register *latches in* the signal.

Driver Features

The SPI slave driver allows using the SPI peripherals as full-duplex Devices. The driver can send/receive transactions up to 64 bytes in length, or utilize DMA to send/receive longer transactions. However, there are some *known issues* related to DMA.

SPI Transactions

A full-duplex SPI transaction begins when the Host asserts the CS line and starts sending out clock pulses on the SCLK line. Every clock pulse, a data bit is shifted from the Host to the Device on the MOSI line and back on the MISO line at the same time. At the end of the transaction, the Host de-asserts the CS line.

The attributes of a transaction are determined by the configuration structure for an SPI host acting as a slave device `spi_slave_interface_config_t`, and transaction configuration structure `spi_slave_transaction_t`.

As not every transaction requires both writing and reading data, you have a choice to configure the `spi_transaction_t` structure for TX only, RX only, or TX and RX transactions. If `spi_slave_transaction_t::rx_buffer` is set to NULL, the read phase will be skipped. If `spi_slave_transaction_t::tx_buffer` is set to NULL, the write phase will be skipped.

注解： A Host should not start a transaction before its Device is ready for receiving data. It is recommended to use another GPIO pin for a handshake signal to sync the Devices. For more details, see *Transaction Interval*.

Driver Usage

- Initialize an SPI peripheral as a Device by calling the function cpp:func:*spi_slave_initialize*. Make sure to set the correct I/O pins in the struct `bus_config`. Set the unused signals to `-1`.

If transactions will be longer than 32 bytes, allow a DMA channel 1 or 2 by setting the parameter `dma_chan` to `1` or `2` respectively. Otherwise, set `dma_chan` to `0`.

- Before initiating transactions, fill one or more `spi_slave_transaction_t` structs with the transaction parameters required. Either queue all transactions by calling the function `spi_slave_queue_trans()` and, at a later time, query the result by using the function `spi_slave_get_trans_result()`, or handle all requests individually by feeding them into `spi_slave_transmit()`. The latter two functions will be blocked until the Host has initiated and finished a transaction, causing the queued data to be sent and received.
- (Optional) To unload the SPI slave driver, call `spi_slave_free()`.

Transaction Data and Master/Slave Length Mismatches

Normally, the data that needs to be transferred to or from a Device is read or written to a chunk of memory indicated by the `rx_buffer` and `tx_buffer` members of the `spi_transaction_t` structure. The SPI driver can be configured to use DMA for transfers, in which case these buffers must be allocated in DMA-capable memory using `pvPortMallocCaps(size, MALLOC_CAP_DMA)`.

The amount of data that the driver can read or write to the buffers is limited by the member `spi_transaction_t::length`. However, this member does not define the actual length of an SPI transaction. A transaction's length is determined by a Host which drives the clock and CS lines. The actual length of the transmission can be read only after a transaction is finished from the member `spi_slave_transaction_t::trans_len`.

If the length of the transmission is greater than the buffer length, only the initial number of bits specified in the `length` member will be sent and received. In this case, `trans_len` is set to `length` instead of the actual transaction length. To meet the actual transaction length requirements, set `length` to a value greater than the maximum `trans_len` expected. If the transmission length is shorter than the buffer length, only the data equal to the length of the buffer will be transmitted.

GPIO Matrix and IO_MUX

Most of ESP32's peripheral signals have direct connection to their dedicated IO_MUX pins. However, the signals can also be routed to any other available pins using the less direct GPIO matrix.

If at least one signal is routed through the GPIO matrix, then all signals will be routed through it. The GPIO matrix samples all signals at 80 MHz and transmits them between the GPIO and the peripheral.

If the driver is configured so that all SPI signals are either routed to their dedicated IO_MUX pins or are not connected at all, the GPIO matrix will be bypassed.

The GPIO matrix introduces flexibility of routing but also increases the input delay of the MISO signal, which makes MISO setup time violations more likely. If SPI needs to operate at high speeds, use dedicated IO_MUX pins.

注解: For more details about the influence of the MISO input delay on the maximum clock frequency, see *Timing Considerations*.

The IO_MUX pins for SPI buses are given below.

Pin Name	SPI2	SPI3
	GPIO Number	
CS0*	15	5
SCLK	14	18
MISO	12	19
MOSI	13	23
QUADWP	2	22
QUADHD	4	21

- Only the first Device attached to the bus can use the CS0 pin.

Speed and Timing Considerations

Transaction Interval The ESP32 SPI slave peripherals are designed as general purpose Devices controlled by a CPU. As opposed to dedicated slaves, CPU-based SPI Devices have a limited number of pre-defined registers. All transactions must be handled by the CPU, which means that the transfers and responses are not real-time, and there might be noticeable latency.

As a solution, a Device's response rate can be doubled by using the functions `spi_slave_queue_trans()` and then `spi_slave_get_trans_result()` instead of using `spi_slave_transmit()`.

You can also configure a GPIO pin through which the Device will signal to the Host when it is ready for a new transaction. A code example of this can be found in peripherals/spi_slave.

SCLK Frequency Requirements The SPI slaves are designed to operate at up to 10 MHz. The data cannot be recognized or received correctly if the clock is too fast or does not have a 50% duty cycle.

On top of that, there are additional requirements for the data to meet the timing constraints:

- **Read (MOSI):** The Device can read data correctly only if the data is already set at the launch edge. Although it is usually the case for most masters.
- **Write (MISO):** The output delay of the MISO signal needs to be shorter than half of a clock cycle period so that the MISO line is stable before the next latch edge. Given that the clock is balanced, the output delay and frequency limitations in different cases are given below.

	Output delay of MISO (ns)	Freq. limit (MHz)
IO_MUX	43.75	<11.4
GPIO matrix	68.75	<7.2

Note: 1. If the frequency is equal to the limitation, it can lead to random errors. 2. The clock uncertainty between Host and Device (12.5ns) is included. 3. The output delay is measured under ideal circumstances

(no load). If the MISO pin is heavily loaded, the output delay will be longer, and the maximum allowed frequency will be lower.
Exception: The frequency is allowed to be higher if the master has more tolerance for the MISO setup time, e.g., latch data at the next edge, or configurable latching time.

Restrictions and Known Issues

1. If DMA is enabled, the rx buffer should be word-aligned (starting from a 32-bit boundary and having a length of multiples of 4 bytes). Otherwise, DMA may write incorrectly or not in a boundary aligned manner. The driver reports an error if this condition is not satisfied.
   Also, a Host should write lengths that are multiples of 4 bytes. The data with inappropriate lengths will be discarded.
2. Furthermore, DMA requires SPI modes 1 and 3. For SPI modes 0 and 2, the MISO signal has to be launched half a clock cycle earlier to meet the timing. The new timing is as follows:

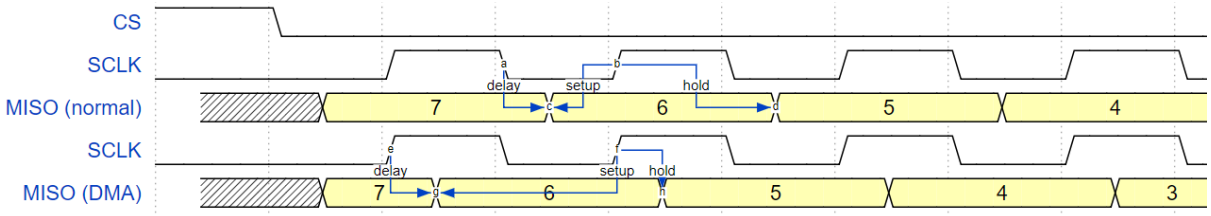

If DMA is enabled, a Device's launch edge is half of an SPI clock cycle ahead of the normal time, shifting to the Master's actual latch edge. In this case, if the GPIO matrix is bypassed, the hold time for data sampling is 68.75 ns and no longer a half of an SPI clock cycle. If the GPIO matrix is used, the hold time will increase to 93.75 ns. The Host should sample the data immediately at the latch edge or communicate in SPI modes 1 or 3. If your Host cannot meet these timing requirements, initialize your Device without DMA.

Application Example

The code example for Device/Host communication can be found in the peripherals/spi_slave directory of ESP-IDF examples.

API Reference

Header File

- driver/include/driver/spi_slave.h

Functions

esp_err_t **spi_slave_initialize**(*spi_host_device_t host*, **const** *spi_bus_config_t *bus_config*, **const** *spi_slave_interface_config_t *slave_config*, *spi_dma_chan_t dma_chan*)

Initialize a SPI bus as a slave interface.

Warning SPI0/1 is not supported

Warning If a DMA channel is selected, any transmit and receive buffer used should be allocated in DMA-capable memory.

Warning The ISR of SPI is always executed on the core which calls this function. Never starve the ISR on this core or the SPI transactions will not be handled.

Return

- ESP_ERR_INVALID_ARG if configuration is invalid
- ESP_ERR_INVALID_STATE if host already is in use
- ESP_ERR_NOT_FOUND if there is no available DMA channel
- ESP_ERR_NO_MEM if out of memory
- ESP_OK on success

Parameters

- `host`: SPI peripheral to use as a SPI slave interface
- `bus_config`: Pointer to a *spi_bus_config_t* struct specifying how the host should be initialized
- `slave_config`: Pointer to a *spi_slave_interface_config_t* struct specifying the details for the slave interface
- `dma_chan`: - Selecting a DMA channel for an SPI bus allows transactions on the bus with size only limited by the amount of internal memory.
  - Selecting SPI_DMA_DISABLED limits the size of transactions.
  - Set to SPI_DMA_DISABLED if only the SPI flash uses this bus.
  - Set to SPI_DMA_CH_AUTO to let the driver to allocate the DMA channel.

esp_err_t **spi_slave_free**(*spi_host_device_t host*)

Free a SPI bus claimed as a SPI slave interface.

Return

- ESP_ERR_INVALID_ARG if parameter is invalid
- ESP_ERR_INVALID_STATE if not all devices on the bus are freed
- ESP_OK on success

Parameters

- `host`: SPI peripheral to free

esp_err_t **spi_slave_queue_trans**(*spi_host_device_t host*, **const** *spi_slave_transaction_t* **trans_desc*, TickType_t *ticks_to_wait*)

Queue a SPI transaction for execution.

Queues a SPI transaction to be executed by this slave device. (The transaction queue size was specified when the slave device was initialised via spi_slave_initialize.) This function may block if the queue is full (depending on the ticks_to_wait parameter). No SPI operation is directly initiated by this function, the next queued transaction will happen when the master initiates a SPI transaction by pulling down CS and sending out clock signals.

This function hands over ownership of the buffers in `trans_desc` to the SPI slave driver; the application is not to access this memory until `spi_slave_queue_trans` is called to hand ownership back to the application.

Return

- ESP_ERR_INVALID_ARG if parameter is invalid
- ESP_OK on success

Parameters

- `host`: SPI peripheral that is acting as a slave
- `trans_desc`: Description of transaction to execute. Not const because we may want to write status back into the transaction description.
- `ticks_to_wait`: Ticks to wait until there's room in the queue; use portMAX_DELAY to never time out.

esp_err_t **spi_slave_get_trans_result**(*spi_host_device_t host*, *spi_slave_transaction_t* ***trans_desc*, TickType_t *ticks_to_wait*)

Get the result of a SPI transaction queued earlier.

This routine will wait until a transaction to the given device (queued earlier with spi_slave_queue_trans) has succesfully completed. It will then return the description of the completed transaction so software can inspect the result and e.g. free the memory or re-use the buffers.

It is mandatory to eventually use this function for any transaction queued by `spi_slave_queue_trans`.

Return

- ESP_ERR_INVALID_ARG if parameter is invalid
- ESP_OK on success

Parameters

- `host`: SPI peripheral to that is acting as a slave
- `[out] trans_desc`: Pointer to variable able to contain a pointer to the description of the transaction that is executed
- `ticks_to_wait`: Ticks to wait until there's a returned item; use portMAX_DELAY to never time out.

esp_err_t **spi_slave_transmit**(*spi_host_device_t host*, *spi_slave_transaction_t* *trans_desc, TickType_t ticks_to_wait)

Do a SPI transaction.

Essentially does the same as spi_slave_queue_trans followed by spi_slave_get_trans_result. Do not use this when there is still a transaction queued that hasn't been finalized using spi_slave_get_trans_result.

Return

- ESP_ERR_INVALID_ARG if parameter is invalid
- ESP_OK on success

Parameters

- `host`: SPI peripheral to that is acting as a slave
- `trans_desc`: Pointer to variable able to contain a pointer to the description of the transaction that is executed. Not const because we may want to write status back into the transaction description.
- `ticks_to_wait`: Ticks to wait until there's a returned item; use portMAX_DELAY to never time out.

Structures

struct spi_slave_interface_config_t

This is a configuration for a SPI host acting as a slave device.

Public Members

int **spics_io_num**

CS GPIO pin for this device.

uint32_t **flags**

Bitwise OR of SPI_SLAVE_* flags.

int **queue_size**

Transaction queue size. This sets how many transactions can be 'in the air' (queued using spi_slave_queue_trans but not yet finished using spi_slave_get_trans_result) at the same time.

uint8_t **mode**

SPI mode, representing a pair of (CPOL, CPHA) configuration:

- 0: (0, 0)
- 1: (0, 1)
- 2: (1, 0)
- 3: (1, 1)

slave_transaction_cb_t **post_setup_cb**

Callback called after the SPI registers are loaded with new data.

This callback is called within interrupt context should be in IRAM for best performance, see "Transferring Speed" section in the SPI Master documentation for full details. If not, the callback may crash during flash operation when the driver is initialized with ESP_INTR_FLAG_IRAM.

slave_transaction_cb_t **post_trans_cb**

Callback called after a transaction is done.

This callback is called within interrupt context should be in IRAM for best performance, see "Transferring Speed" section in the SPI Master documentation for full details. If not, the callback may crash during flash operation when the driver is initialized with ESP_INTR_FLAG_IRAM.

struct spi_slave_transaction_t

This structure describes one SPI transaction

Public Members

size_t **length**

Total data length, in bits.

size_t **trans_len**
Transaction data length, in bits.

const void ***tx_buffer**
Pointer to transmit buffer, or NULL for no MOSI phase.

void ***rx_buffer**
Pointer to receive buffer, or NULL for no MISO phase. When the DMA is anabled, must start at WORD boundary (`rx_buffer%4==0`), and has length of a multiple of 4 bytes.

void ***user**
User-defined variable. Can be used to store eg transaction ID.

Macros

SPI_SLAVE_TXBIT_LSBFIRST
Transmit command/address/data LSB first instead of the default MSB first.

SPI_SLAVE_RXBIT_LSBFIRST
Receive data LSB first instead of the default MSB first.

SPI_SLAVE_BIT_LSBFIRST
Transmit and receive LSB first.

Type Definitions

typedef struct *spi_slave_transaction_t* **spi_slave_transaction_t**
typedef void (***slave_transaction_cb_t**)(*spi_slave_transaction_t* *trans)

2.3.17 ESP32-WROOM-32SE (Secure Element)

Overview

The ESP32-WROOM-32SE has integrated Microchip ' s ATECC608A cryptoauth chip in the module. ATECC608A is secure element which would generate and store ECC private key in the hardware.The ECC private key can be used to enhance security to connect to IoT cloud services with use of X.509 based mutual authentication. The application example demonstrates ECDSA sign and verify functions using ECC private key stored in ATECC608A

Application Example

Secure Element ECDSA Sign/Verify example: peripherals/secure_element/atecc608_ecdsa.

How to configure and provision ESP32-WROOM-32SE for TLS

To configure and provision ATECC608A chip on ESP32-WROOM-32SE please visit esp_cryptoauth_utility

How to use ATECC608A of ESP32-WROOM-32SE for TLS

ATECC608A can be used for TLS connections using ESP-TLS. To configure ESP-TLS for using secure element please refer *ATECC608A with ESP-TLS* in *ESP-TLS documentation.*

2.3.18 触摸传感器

概述

触摸传感器系统由保护覆盖层、触摸电极、绝缘基板和走线组成，保护覆盖层位于最上层，绝缘基板上设有电极及走线。用户触摸覆盖层将产生电容变化，根据电容变化判断此次触摸是否为有效触摸行为。

ESP32 可支持最多 10 个电容式触摸板/GPIO，触摸板可以以矩阵或滑条等方式组合使用，从而覆盖更大触感区域及更多触感点。触摸传感由有限状态机 (FSM) 硬件控制，由软件或专用硬件计时器发起。

如需了解触摸传感器设计、操作及其控制寄存器等相关信息，请参考《ESP32 技术参考手册》(PDF)，您也可以在《ESP32 技术参考手册》中查看这一子系统是如何运行的。

请参考 触摸传感器应用方案简介，查看触摸传感器设计详情和固件开发指南。更多关于在多种配置环境下测试触摸传感器的信息，请参考 ESP32 触摸功能开发套件。

功能介绍

下面将 API 分解成几个函数组进行介绍，帮助您快速了解以下功能：

- 初始化触摸板驱动程序
- 配置触摸板 GPIO 管脚
- 触摸状态测量
- 调整测量参数（优化测量）
- 过滤触摸测量
- 触摸监测方式
- 设置中断信号监测触碰动作
- 中断触发

请前往*API 参考* 章节，查看某一函数的具体描述。*应用示例* 章节则介绍了此 API 的具体实现。

初始化触摸板驱动程序 使用触摸板之前，需要先调用`touch_pad_init()` 函数初始化触摸板驱动程序。此函数设置了*API 参考* 项下的 *Macros* 中列出的几项 `..._DEFAULT` 驱动程序参数，同时删除之前设置过的触摸板信息（如有），并禁用中断。

如果不再需要该驱动程序，可以调用`touch_pad_deinit()` 释放已初始化的驱动程序。

配置触摸板 GPIO 管脚 调用`touch_pad_config()` 使能某一 GPIO 的触感功能。

使用`touch_pad_set_fsm_mode()` 选择触摸板测量（由 FSM 操作）是由硬件计时器自动启动，还是由软件自动启动。如果选择软件模式，请使用`touch_pad_sw_start()` 启动 FSM。

触摸状态测量 借助以下两个函数从传感器读取原始数据或过滤后的数据：

- `touch_pad_read()`
- `touch_pad_read_filtered()`

这两个函数也可以用于检查触碰和释放触摸板时传感器读数变化范围，来评估触摸板设计，然后根据这些信息设定触摸阈值。

注解： 使用`touch_pad_read_filtered()` 之前，需要先调用过滤触摸测量 中特定的滤波器函数初始化并配置该滤波器。

请参考应用示例 peripherals/touch_pad_read，查看如何使用这两个读值函数。

优化测量 触摸传感器设有数个可配置参数，以适应触摸板设计特点。例如，如果需要感知较细微的电容变化，则可以缩小触摸板充放电的参考电压范围。您可以使用`touch_pad_set_voltage()` 函数设置电压参考低值和参考高值。

优化测量除了可以识别细微的电容变化之外，还可以降低应用程序功耗，但可能会增加测量噪声干扰。如果得到的动态读数范围结果比较理想，则可以调用`touch_pad_set_meas_time()` 函数来减少测量时间，从而进一步降低功耗。

可用的测量参数及相应的‘set’函数总结如下：

- 触摸板充放电参数：

  - 电压门限：*touch_pad_set_voltage()*
  - 速率（斜率）*touch_pad_set_cnt_mode()*
- 测量时间：*touch_pad_set_meas_time()*

电压门限（参考低值/参考高值）、速率（斜率）与测量时间的关系如下图所示：

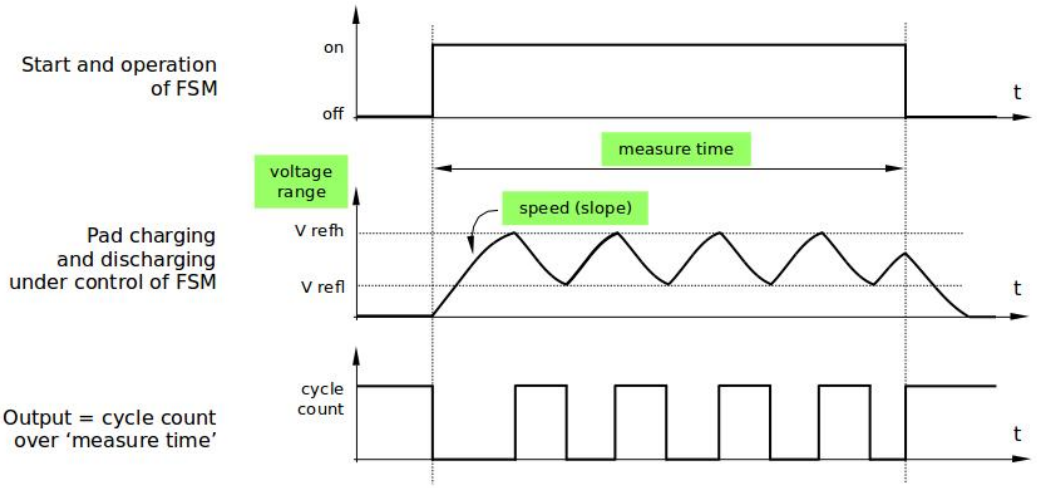

图 18: 触摸板 - 测量参数之间的关系

上图中的 *Output* 代表触摸传感器读值，即一个测量周期内测得的脉冲计数值。

所有函数均成对出现，用于设定某一特定参数，并获取当前参数值。例如：*touch_pad_set_voltage()* 和*touch_pad_get_voltage()*。

过滤触摸测量 如果测量中存在噪声，可以使用提供的 API 函数对测量进行过滤。使用滤波器之前，请先调用*touch_pad_filter_start()* 启动该滤波器。

滤波器类型为 IIR（无限脉冲响应滤波器），您可以调用*touch_pad_set_filter_period()* 配置此类滤波器的采样周期。

如需停止滤波器，请调用*touch_pad_filter_stop()* 函数。如果不再使用该滤波器，请调用*touch_pad_filter_delete()* 删除此滤波器。

触摸监测 触摸监测基于用户配置的阈值和 FSM 执行的原始测量，并由 ESP32 硬件实现。你可以调用*touch_pad_get_status()* 查看被触碰的触摸板，或调用*touch_pad_clear_status()* 清除触摸状态信息。

您也可以将硬件触摸监测连接至中断，详细介绍见下一章节。

如果测量中存在噪声，且电容变化幅度较小，硬件触摸监测结果可能就不太理想。如需解决这一问题，不建议使用硬件监测或中断信号，建议您在自己的应用程序中采用测量过滤，并执行触摸监测。请参考 peripherals/touch_pad_interrupt，查看以上两种触摸监测的实现方式。

中断触发 在对触摸监测启用中断之前，请先设置一个触摸监测阈值。然后使用触摸状态测量 中所述的函数读取并显示触摸和释放触摸板时测得的结果。如果测量中存在噪声且相对电容变化较小，请使用滤波器。您也可以根据应用程序和环境条件，测试温度和电源电压变化对测量值的影响。

确定监测阈值后就可以在初始化时调用*touch_pad_config()* 设置此阈值，或在运行时调用*touch_pad_set_thresh()* 设置此阈值。

下一步就是设置如何触发中断。您可以设置在阈值以下或以上触发中断，具体触发模式由函数*touch_pad_set_trigger_mode()* 设置。

最后您可以使用以下函数配置和管理中断调用：

- *touch_pad_isr_register()* / *touch_pad_isr_deregister()*
- *touch_pad_intr_enable()* / *touch_pad_intr_disable()*

中断配置完成后，您可以调用*touch_pad_get_status()* 查看中断信号来自哪个触摸板，也可以调用*touch_pad_clear_status()* 清除触摸板状态信息。

注解： 触摸监测中的中断信号基于原始/未经过滤的测量值（对比用户设置的阈值），并在硬件中实现。启用软件滤波 API 并不会影响这一过程，见过滤触摸测量。

从睡眠模式唤醒 如果使用触摸板中断将芯片从睡眠模式唤醒，您可以选择配置一些触摸板，例如 SET1 或 SET1 和 SET2，触摸这些触摸板将触发中断并唤醒芯片。请调用*touch_pad_set_trigger_source()* 实现上述操作。

您可以使用以下函数管理‘SET’中触摸板所需的位模式配置：

- *touch_pad_set_group_mask()* / *touch_pad_get_group_mask()*
- *touch_pad_clear_group_mask()*

应用示例

- 触摸传感器读值示例：peripherals/touch_pad_read
- 触摸传感器中断示例：peripherals/touch_pad_interrupt

API 参考

Header File

- driver/esp32/include/driver/touch_sensor.h

Functions

esp_err_t **touch_pad_config**(*touch_pad_t touch_num*, uint16_t *threshold*)

Configure touch pad interrupt threshold.

Note If FSM mode is set to TOUCH_FSM_MODE_TIMER, this function will be blocked for one measurement cycle and wait for data to be valid.

Return

- ESP_OK Success
- ESP_ERR_INVALID_ARG if argument wrong
- ESP_FAIL if touch pad not initialized

Parameters

- `touch_num`: touch pad index
- `threshold`: interrupt threshold,

esp_err_t **touch_pad_read**(*touch_pad_t touch_num*, uint16_t **touch_value*)

get touch sensor counter value. Each touch sensor has a counter to count the number of charge/discharge cycles. When the pad is not ‘touched’, we can get a number of the counter. When the pad is ‘touched’, the value in counter will get smaller because of the larger equivalent capacitance.

Note This API requests hardware measurement once. If IIR filter mode is enabled, please use ‘touch_pad_read_raw_data’ interface instead.

Return

- ESP_OK Success
- ESP_ERR_INVALID_ARG Touch pad parameter error

- ESP_ERR_INVALID_STATE This touch pad hardware connection is error, the value of "touch_value" is 0.
- ESP_FAIL Touch pad not initialized

Parameters

- `touch_num`: touch pad index
- `touch_value`: pointer to accept touch sensor value

esp_err_t **touch_pad_read_filtered**(*touch_pad_t touch_num*, uint16_t **touch_value*)

get filtered touch sensor counter value by IIR filter.

Note touch_pad_filter_start has to be called before calling touch_pad_read_filtered. This function can be called from ISR

Return

- ESP_OK Success
- ESP_ERR_INVALID_ARG Touch pad parameter error
- ESP_ERR_INVALID_STATE This touch pad hardware connection is error, the value of "touch_value" is 0.
- ESP_FAIL Touch pad not initialized

Parameters

- `touch_num`: touch pad index
- `touch_value`: pointer to accept touch sensor value

esp_err_t **touch_pad_read_raw_data**(*touch_pad_t touch_num*, uint16_t **touch_value*)

get raw data (touch sensor counter value) from IIR filter process. Need not request hardware measurements.

Note touch_pad_filter_start has to be called before calling touch_pad_read_raw_data. This function can be called from ISR

Return

- ESP_OK Success
- ESP_ERR_INVALID_ARG Touch pad parameter error
- ESP_ERR_INVALID_STATE This touch pad hardware connection is error, the value of "touch_value" is 0.
- ESP_FAIL Touch pad not initialized

Parameters

- `touch_num`: touch pad index
- `touch_value`: pointer to accept touch sensor value

esp_err_t **touch_pad_set_filter_read_cb**(*filter_cb_t read_cb*)

Register the callback function that is called after each IIR filter calculation.

Note The 'read_cb' callback is called in timer task in each filtering cycle.

Return

- ESP_OK Success
- ESP_ERR_INVALID_ARG set error

Parameters

- `read_cb`: Pointer to filtered callback function. If the argument passed in is NULL, the callback will stop.

esp_err_t **touch_pad_isr_register**(*intr_handler_t fn*, void **arg*)

Register touch-pad ISR. The handler will be attached to the same CPU core that this function is running on.

Return

- ESP_OK Success ;
- ESP_ERR_INVALID_ARG GPIO error
- ESP_ERR_NO_MEM No memory

Parameters

- `fn`: Pointer to ISR handler
- `arg`: Parameter for ISR

esp_err_t **touch_pad_set_meas_time**(uint16_t *sleep_cycle*, uint16_t *meas_cycle*)

Set touch sensor measurement and sleep time. Excessive total time will slow down the touch response. Too small measurement time will not be sampled enough, resulting in inaccurate measurements.

Note The greater the duty cycle of the measurement time, the more system power is consumed.

Return

- ESP_OK on success

Parameters

- `sleep_cycle`: The touch sensor will sleep after each measurement. sleep_cycle decide the interval between each measurement. t_sleep = sleep_cycle / (RTC_SLOW_CLK frequency). The approximate frequency value of RTC_SLOW_CLK can be obtained using rtc_clk_slow_freq_get_hz function.
- `meas_cycle`: The duration of the touch sensor measurement. t_meas = meas_cycle / 8M, the maximum measure time is 0xffff / 8M = 8.19 ms

esp_err_t **touch_pad_get_meas_time**(uint16_t **sleep_cycle*, uint16_t **meas_cycle*)

Get touch sensor measurement and sleep time.

Return

- ESP_OK on success

Parameters

- `sleep_cycle`: Pointer to accept sleep cycle number
- `meas_cycle`: Pointer to accept measurement cycle count.

esp_err_t **touch_pad_sw_start**(void)

Trigger a touch sensor measurement, only support in SW mode of FSM.

Return

- ESP_OK on success

esp_err_t **touch_pad_set_thresh**(*touch_pad_t touch_num*, uint16_t *threshold*)

Set touch sensor interrupt threshold.

Return

- ESP_OK on success
- ESP_ERR_INVALID_ARG if argument is wrong

Parameters

- `touch_num`: touch pad index
- `threshold`: threshold of touchpad count, refer to touch_pad_set_trigger_mode to see how to set trigger mode.

esp_err_t **touch_pad_get_thresh**(*touch_pad_t touch_num*, uint16_t **threshold*)

Get touch sensor interrupt threshold.

Return

- ESP_OK on success
- ESP_ERR_INVALID_ARG if argument is wrong

Parameters

- `touch_num`: touch pad index
- `threshold`: pointer to accept threshold

esp_err_t **touch_pad_set_trigger_mode**(*touch_trigger_mode_t mode*)

Set touch sensor interrupt trigger mode. Interrupt can be triggered either when counter result is less than threshold or when counter result is more than threshold.

Return

- ESP_OK on success
- ESP_ERR_INVALID_ARG if argument is wrong

Parameters

- `mode`: touch sensor interrupt trigger mode

esp_err_t **touch_pad_get_trigger_mode**(*touch_trigger_mode_t *mode*)

Get touch sensor interrupt trigger mode.

Return

- ESP_OK on success

Parameters

- `mode`: pointer to accept touch sensor interrupt trigger mode

esp_err_t **touch_pad_set_trigger_source**(*touch_trigger_src_t src*)

Set touch sensor interrupt trigger source. There are two sets of touch signals. Set1 and set2 can be mapped to several touch signals. Either set will be triggered if at least one of its touch signal is ‘touched’. The interrupt can be configured to be generated if set1 is triggered, or only if both sets are triggered.

Return

- ESP_OK on success
- ESP_ERR_INVALID_ARG if argument is wrong

Parameters

- `src`: touch sensor interrupt trigger source

esp_err_t **touch_pad_get_trigger_source**(*touch_trigger_src_t *src*)

Get touch sensor interrupt trigger source.

Return

- ESP_OK on success

Parameters

- `src`: pointer to accept touch sensor interrupt trigger source

esp_err_t **touch_pad_set_group_mask**(uint16_t *set1_mask*, uint16_t *set2_mask*, uint16_t *en_mask*)

Set touch sensor group mask. Touch pad module has two sets of signals, ‘Touched’ signal is triggered only if at least one of touch pad in this group is “touched”. This function will set the register bits according to the given bitmask.

Return

- ESP_OK on success
- ESP_ERR_INVALID_ARG if argument is wrong

Parameters

- `set1_mask`: bitmask of touch sensor signal group1, it’s a 10-bit value
- `set2_mask`: bitmask of touch sensor signal group2, it’s a 10-bit value
- `en_mask`: bitmask of touch sensor work enable, it’s a 10-bit value

esp_err_t **touch_pad_get_group_mask**(uint16_t **set1_mask*, uint16_t **set2_mask*, uint16_t **en_mask*)

Get touch sensor group mask.

Return

- ESP_OK on success

Parameters

- `set1_mask`: pointer to accept bitmask of touch sensor signal group1, it’s a 10-bit value
- `set2_mask`: pointer to accept bitmask of touch sensor signal group2, it’s a 10-bit value
- `en_mask`: pointer to accept bitmask of touch sensor work enable, it’s a 10-bit value

esp_err_t **touch_pad_clear_group_mask**(uint16_t *set1_mask*, uint16_t *set2_mask*, uint16_t *en_mask*)

Clear touch sensor group mask. Touch pad module has two sets of signals, Interrupt is triggered only if at least one of touch pad in this group is “touched”. This function will clear the register bits according to the given bitmask.

Return

- ESP_OK on success
- ESP_ERR_INVALID_ARG if argument is wrong

Parameters

- `set1_mask`: bitmask touch sensor signal group1, it’s a 10-bit value
- `set2_mask`: bitmask touch sensor signal group2, it’s a 10-bit value
- `en_mask`: bitmask of touch sensor work enable, it’s a 10-bit value

esp_err_t **touch_pad_intr_enable**(void)

To enable touch pad interrupt.

Return

- ESP_OK on success

esp_err_t **touch_pad_intr_disable**(void)

To disable touch pad interrupt.

Return

- ESP_OK on success

esp_err_t **touch_pad_intr_clear**(void)

To clear touch pad interrupt.

Return

- ESP_OK on success

esp_err_t **touch_pad_set_filter_period**(uint32_t *new_period_ms*)

set touch pad filter calibration period, in ms. Need to call touch_pad_filter_start before all touch filter APIs

Return

- ESP_OK Success
- ESP_ERR_INVALID_STATE driver state error
- ESP_ERR_INVALID_ARG parameter error

Parameters

- `new_period_ms`: filter period, in ms

esp_err_t **touch_pad_get_filter_period**(uint32_t **p_period_ms*)

get touch pad filter calibration period, in ms Need to call touch_pad_filter_start before all touch filter APIs

Return

- ESP_OK Success
- ESP_ERR_INVALID_STATE driver state error
- ESP_ERR_INVALID_ARG parameter error

Parameters

- `p_period_ms`: pointer to accept period

esp_err_t **touch_pad_filter_start**(uint32_t *filter_period_ms*)

start touch pad filter function This API will start a filter to process the noise in order to prevent false triggering when detecting slight change of capacitance. Need to call touch_pad_filter_start before all touch filter APIs

Note This filter uses FreeRTOS timer, which is dispatched from a task with priority 1 by default on CPU 0. So if some application task with higher priority takes a lot of CPU0 time, then the quality of data obtained from this filter will be affected. You can adjust FreeRTOS timer task priority in menuconfig.

Return

- ESP_OK Success
- ESP_ERR_INVALID_ARG parameter error
- ESP_ERR_NO_MEM No memory for driver
- ESP_ERR_INVALID_STATE driver state error

Parameters

- `filter_period_ms`: filter calibration period, in ms

esp_err_t **touch_pad_filter_stop**(void)

stop touch pad filter function Need to call touch_pad_filter_start before all touch filter APIs

Return

- ESP_OK Success
- ESP_ERR_INVALID_STATE driver state error

esp_err_t **touch_pad_filter_delete**(void)

delete touch pad filter driver and release the memory Need to call touch_pad_filter_start before all touch filter APIs

Return

- ESP_OK Success
- ESP_ERR_INVALID_STATE driver state error

Type Definitions

typedef void (***filter_cb_t**)(uint16_t *raw_value, uint16_t *filtered_value)

Callback function that is called after each IIR filter calculation.

Note This callback is called in timer task in each filtering cycle.

Note This callback should not be blocked.

Parameters

- `raw_value`: The latest raw data(touch sensor counter value) that points to all channels(raw_value[0..TOUCH_PAD_MAX-1]).
- `filtered_value`: The latest IIR filtered data(calculated from raw data) that points to all channels(filtered_value[0..TOUCH_PAD_MAX-1]).

Header File

- driver/include/driver/touch_sensor_common.h

Functions

esp_err_t **touch_pad_init**(void)

Initialize touch module.

Note If default parameter don't match the usage scenario, it can be changed after this function.

Return

- ESP_OK Success
- ESP_ERR_NO_MEM Touch pad init error
- ESP_ERR_NOT_SUPPORTED Touch pad is providing current to external XTAL

esp_err_t **touch_pad_deinit**(void)

Un-install touch pad driver.

Note After this function is called, other touch functions are prohibited from being called.

Return

- ESP_OK Success
- ESP_FAIL Touch pad driver not initialized

esp_err_t **touch_pad_io_init**(*touch_pad_t touch_num*)

Initialize touch pad GPIO.

Return

- ESP_OK on success
- ESP_ERR_INVALID_ARG if argument is wrong

Parameters

- `touch_num`: touch pad index

esp_err_t **touch_pad_set_voltage**(*touch_high_volt_t refh*, *touch_low_volt_t refl*, *touch_volt_atten_t atten*)

Set touch sensor high voltage threshold of chanrge. The touch sensor measures the channel capacitance value by charging and discharging the channel. So the high threshold should be less than the supply voltage.

Return

- ESP_OK on success
- ESP_ERR_INVALID_ARG if argument is wrong

Parameters

- `refh`: the value of DREFH
- `refl`: the value of DREFL
- `atten`: the attenuation on DREFH

esp_err_t **touch_pad_get_voltage**(*touch_high_volt_t *refh*, *touch_low_volt_t *refl*, *touch_volt_atten_t *atten*)

Get touch sensor reference voltage,.

Return

- ESP_OK on success

Parameters

- `refh`: pointer to accept DREFH value
- `refl`: pointer to accept DREFL value
- `atten`: pointer to accept the attenuation on DREFH

esp_err_t **touch_pad_set_cnt_mode**(*touch_pad_t touch_num*, *touch_cnt_slope_t slope*, *touch_tie_opt_t opt*)

Set touch sensor charge/discharge speed for each pad. If the slope is 0, the counter would always be zero. If the slope is 1, the charging and discharging would be slow, accordingly. If the slope is set 7, which is the maximum value, the charging and discharging would be fast.

Note The higher the charge and discharge current, the greater the immunity of the touch channel, but it will increase the system power consumption.

Return

- ESP_OK on success
- ESP_ERR_INVALID_ARG if argument is wrong

Parameters

- `touch_num`: touch pad index
- `slope`: touch pad charge/discharge speed
- `opt`: the initial voltage

esp_err_t **touch_pad_get_cnt_mode**(*touch_pad_t touch_num*, *touch_cnt_slope_t *slope*, *touch_tie_opt_t *opt*)

Get touch sensor charge/discharge speed for each pad.

Return

- ESP_OK on success
- ESP_ERR_INVALID_ARG if argument is wrong

Parameters

- `touch_num`: touch pad index
- `slope`: pointer to accept touch pad charge/discharge slope
- `opt`: pointer to accept the initial voltage

esp_err_t **touch_pad_isr_deregister**(void (**fn*)) void *
, void **arg*Deregister the handler previously registered using touch_pad_isr_handler_register.

Return

- ESP_OK on success
- ESP_ERR_INVALID_STATE if a handler matching both fn and arg isn't registered

Parameters

- `fn`: handler function to call (as passed to touch_pad_isr_handler_register)
- `arg`: argument of the handler (as passed to touch_pad_isr_handler_register)

esp_err_t **touch_pad_get_wakeup_status**(*touch_pad_t *pad_num*)

Get the touch pad which caused wakeup from deep sleep.

Return

- ESP_OK Success
- ESP_ERR_INVALID_ARG parameter is NULL

Parameters

- `pad_num`: pointer to touch pad which caused wakeup

esp_err_t **touch_pad_set_fsm_mode**(*touch_fsm_mode_t mode*)

Set touch sensor FSM mode, the test action can be triggered by the timer, as well as by the software.

Return

- ESP_OK on success
- ESP_ERR_INVALID_ARG if argument is wrong

Parameters

- `mode`: FSM mode

esp_err_t **touch_pad_get_fsm_mode**(*touch_fsm_mode_t *mode*)

Get touch sensor FSM mode.

Return

- ESP_OK on success

Parameters

- `mode`: pointer to accept FSM mode

esp_err_t **touch_pad_clear_status**(void)
To clear the touch sensor channel active status.

Note The FSM automatically updates the touch sensor status. It is generally not necessary to call this API to clear the status.

Return
- ESP_OK on success

uint32_t **touch_pad_get_status**(void)
Get the touch sensor channel active status mask. The bit position represents the channel number. The 0/1 status of the bit represents the trigger status.

Return
- The touch sensor status. e.g. Touch1 trigger status is `status_mask & (BIT1)`.

bool **touch_pad_meas_is_done**(void)
Check touch sensor measurement status.

Return
- True measurement is under way
- False measurement done

GPIO 宏查找表 您可以使用宏定义某一触摸板通道的 GPIO，或定义某一 GPIO 的通道。例如：

1. `TOUCH_PAD_NUM5_GPIO_NUM` 定义了通道 5 的 GPIO（即 GPIO 12）；
2. `TOUCH_PAD_GPIO4_CHANNEL` 定义了 GPIO 4 的通道（即通道 0）。

Header File

- soc/esp32/include/soc/touch_sensor_channel.h

Macros

TOUCH_PAD_GPIO4_CHANNEL
TOUCH_PAD_NUM0_GPIO_NUM

TOUCH_PAD_GPIO0_CHANNEL

TOUCH_PAD_NUM1_GPIO_NUM

TOUCH_PAD_GPIO2_CHANNEL

TOUCH_PAD_NUM2_GPIO_NUM

TOUCH_PAD_GPIO15_CHANNEL

TOUCH_PAD_NUM3_GPIO_NUM

TOUCH_PAD_GPIO13_CHANNEL

TOUCH_PAD_NUM4_GPIO_NUM

TOUCH_PAD_GPIO12_CHANNEL

TOUCH_PAD_NUM5_GPIO_NUM

TOUCH_PAD_GPIO14_CHANNEL

TOUCH_PAD_NUM6_GPIO_NUM

TOUCH_PAD_GPIO27_CHANNEL

TOUCH_PAD_NUM7_GPIO_NUM

TOUCH_PAD_GPIO33_CHANNEL

TOUCH_PAD_NUM8_GPIO_NUM

TOUCH_PAD_GPIO32_CHANNEL

TOUCH_PAD_NUM9_GPIO_NUM

Header File

- hal/include/hal/touch_sensor_types.h

Macros

TOUCH_PAD_BIT_MASK_ALL

TOUCH_PAD_SLOPE_DEFAULT

TOUCH_PAD_TIE_OPT_DEFAULT

TOUCH_PAD_BIT_MASK_MAX

TOUCH_PAD_HIGH_VOLTAGE_THRESHOLD

TOUCH_PAD_LOW_VOLTAGE_THRESHOLD

TOUCH_PAD_ATTEN_VOLTAGE_THRESHOLD

TOUCH_PAD_IDLE_CH_CONNECT_DEFAULT

TOUCH_PAD_THRESHOLD_MAX
If set touch threshold max value, The touch sensor can’ t be in touched status

TOUCH_PAD_SLEEP_CYCLE_DEFAULT
The timer frequency is RTC_SLOW_CLK (can be 150k or 32k depending on the options), max value is 0xffff

TOUCH_PAD_MEASURE_CYCLE_DEFAULT
The timer frequency is 8Mhz, the max value is 0x7fff

TOUCH_FSM_MODE_DEFAULT
The touch FSM my be started by the software or timer

TOUCH_TRIGGER_MODE_DEFAULT
Interrupts can be triggered if sensor value gets below or above threshold

TOUCH_TRIGGER_SOURCE_DEFAULT
The wakeup trigger source can be SET1 or both SET1 and SET2

Enumerations

enum touch_pad_t
Touch pad channel

Values:

TOUCH_PAD_NUM0 = 0
Touch pad channel 0 is GPIO4(ESP32)

TOUCH_PAD_NUM1
Touch pad channel 1 is GPIO0(ESP32) / GPIO1(ESP32-S2)

TOUCH_PAD_NUM2
Touch pad channel 2 is GPIO2(ESP32) / GPIO2(ESP32-S2)

TOUCH_PAD_NUM3
Touch pad channel 3 is GPIO15(ESP32) / GPIO3(ESP32-S2)

TOUCH_PAD_NUM4
Touch pad channel 4 is GPIO13(ESP32) / GPIO4(ESP32-S2)

TOUCH_PAD_NUM5
Touch pad channel 5 is GPIO12(ESP32) / GPIO5(ESP32-S2)

TOUCH_PAD_NUM6
Touch pad channel 6 is GPIO14(ESP32) / GPIO6(ESP32-S2)

TOUCH_PAD_NUM7
Touch pad channel 7 is GPIO27(ESP32) / GPIO7(ESP32-S2)

TOUCH_PAD_NUM8
Touch pad channel 8 is GPIO33(ESP32) / GPIO8(ESP32-S2)

TOUCH_PAD_NUM9
Touch pad channel 9 is GPIO32(ESP32) / GPIO9(ESP32-S2)

TOUCH_PAD_MAX

enum touch_high_volt_t
Touch sensor high reference voltage

Values:

TOUCH_HVOLT_KEEP = -1
Touch sensor high reference voltage, no change

TOUCH_HVOLT_2V4 = 0
Touch sensor high reference voltage, 2.4V

TOUCH_HVOLT_2V5
Touch sensor high reference voltage, 2.5V

TOUCH_HVOLT_2V6
Touch sensor high reference voltage, 2.6V

TOUCH_HVOLT_2V7
Touch sensor high reference voltage, 2.7V

TOUCH_HVOLT_MAX

enum touch_low_volt_t
Touch sensor low reference voltage

Values:

TOUCH_LVOLT_KEEP = -1
Touch sensor low reference voltage, no change

TOUCH_LVOLT_0V5 = 0
Touch sensor low reference voltage, 0.5V

TOUCH_LVOLT_0V6
Touch sensor low reference voltage, 0.6V

TOUCH_LVOLT_0V7
Touch sensor low reference voltage, 0.7V

TOUCH_LVOLT_0V8
Touch sensor low reference voltage, 0.8V

TOUCH_LVOLT_MAX

enum touch_volt_atten_t
Touch sensor high reference voltage attenuation

Values:

TOUCH_HVOLT_ATTEN_KEEP = -1
Touch sensor high reference voltage attenuation, no change

TOUCH_HVOLT_ATTEN_1V5 = 0
Touch sensor high reference voltage attenuation, 1.5V attenuation

TOUCH_HVOLT_ATTEN_1V
Touch sensor high reference voltage attenuation, 1.0V attenuation

TOUCH_HVOLT_ATTEN_0V5
Touch sensor high reference voltage attenuation, 0.5V attenuation

TOUCH_HVOLT_ATTEN_0V
Touch sensor high reference voltage attenuation, 0V attenuation

TOUCH_HVOLT_ATTEN_MAX

enum touch_cnt_slope_t
Touch sensor charge/discharge speed

Values:

TOUCH_PAD_SLOPE_0 = 0
Touch sensor charge / discharge speed, always zero

TOUCH_PAD_SLOPE_1 = 1
Touch sensor charge / discharge speed, slowest

TOUCH_PAD_SLOPE_2 = 2
Touch sensor charge / discharge speed

TOUCH_PAD_SLOPE_3 = 3
Touch sensor charge / discharge speed

TOUCH_PAD_SLOPE_4 = 4
Touch sensor charge / discharge speed

TOUCH_PAD_SLOPE_5 = 5
Touch sensor charge / discharge speed

TOUCH_PAD_SLOPE_6 = 6
Touch sensor charge / discharge speed

TOUCH_PAD_SLOPE_7 = 7
Touch sensor charge / discharge speed, fast

TOUCH_PAD_SLOPE_MAX

enum touch_tie_opt_t
Touch sensor initial charge level

Values:

TOUCH_PAD_TIE_OPT_LOW = 0
Initial level of charging voltage, low level

TOUCH_PAD_TIE_OPT_HIGH = 1
Initial level of charging voltage, high level

TOUCH_PAD_TIE_OPT_MAX

enum touch_fsm_mode_t
Touch sensor FSM mode

Values:

TOUCH_FSM_MODE_TIMER = 0
To start touch FSM by timer

TOUCH_FSM_MODE_SW
To start touch FSM by software trigger

TOUCH_FSM_MODE_MAX

enum touch_trigger_mode_t
Values:

TOUCH_TRIGGER_BELOW = 0
Touch interrupt will happen if counter value is less than threshold.

TOUCH_TRIGGER_ABOVE = 1
Touch interrupt will happen if counter value is larger than threshold.

TOUCH_TRIGGER_MAX

enum touch_trigger_src_t

Values:

TOUCH_TRIGGER_SOURCE_BOTH = 0

wakeup interrupt is generated if both SET1 and SET2 are "touched"

TOUCH_TRIGGER_SOURCE_SET1 = 1

wakeup interrupt is generated if SET1 is "touched"

TOUCH_TRIGGER_SOURCE_MAX

2.3.19 TWAI

Overview

The Two-Wire Automotive Interface (TWAI) is a real-time serial communication protocol suited for automotive and industrial applications. It is compatible with ISO11898-1 Classical frames, thus can support Standard Frame Format (11-bit ID) and Extended Frame Format (29-bit ID). The ESP32's peripherals contains a TWAI controller that can be configured to communicate on a TWAI bus via an external transceiver.

警告: The TWAI controller is not compatible with ISO11898-1 FD Format frames, and will interpret such frames as errors.

This programming guide is split into the following sections:

1. *TWAI Protocol Summary*
2. *Signals Lines and Transceiver*
3. *Driver Configuration*
4. *Driver Operation*
5. *Examples*

TWAI Protocol Summary

The TWAI is a multi-master, multi-cast, asynchronous, serial communication protocol. TWAI also supports error detection and signalling, and inbuilt message prioritization.

Multi-master: Any node on the bus can initiate the transfer of a message.

Multi-cast: When a node transmits a message, all nodes on the bus will receive the message (i.e., broadcast) thus ensuring data consistency across all nodes. However, some nodes can selectively choose which messages to accept via the use of acceptance filtering (multi-cast).

Asynchronous: The bus does not contain a clock signal. All nodes on the bus operate at the same bit rate and synchronize using the edges of the bits transmitted on the bus.

Error Detection and Signalling: Every node will constantly monitor the bus. When any node detects an error, it will signal the detection by transmitting an error frame. Other nodes will receive the error frame and transmit their own error frames in response. This will result in an error detection being propagated to all nodes on the bus.

Message Priorities: Messages contain an ID field. If two or more nodes attempt to transmit simultaneously, the node transmitting the message with the lower ID value will win arbitration of the bus. All other nodes will become receivers ensuring that there is at most one transmitter at any time.

TWAI Messages TWAI Messages are split into Data Frames and Remote Frames. Data Frames are used to deliver a data payload to other nodes, whereas a Remote Frame is used to request a Data Frame from other nodes (other nodes can optionally respond with a Data Frame). Data and Remote Frames have two frame formats known as **Extended**

Frame and **Standard Frame** which contain a 29-bit ID and an 11-bit ID respectively. A TWAI message consists of the following fields:

- 29-bit or 11-bit ID: Determines the priority of the message (lower value has higher priority).
- Data Length Code (DLC) between 0 to 8: Indicates the size (in bytes) of the data payload for a Data Frame, or the amount of data to request for a Remote Frame.
- Up to 8 bytes of data for a Data Frame (should match DLC).

Error States and Counters The TWAI protocol implements a feature known as "fault confinement" where a persistently erroneous node will eventually eliminate itself form the bus. This is implemented by requiring every node to maintain two internal error counters known as the **Transmit Error Counter (TEC)** and the **Receive Error Counter (REC)**. The two error counters are incremented and decremented according to a set of rules (where the counters increase on an error, and decrease on a successful message transmission/reception). The values of the counters are used to determine a node's **error state**, namely **Error Active**, **Error Passive**, and **Bus-Off**.

Error Active: A node is Error Active when **both TEC and REC are less than 128** and indicates that the node is operating normally. Error Active nodes are allowed to participate in bus communications, and will actively signal the detection of any errors by automatically transmitting an **Active Error Flag** over the bus.

Error Passive: A node is Error Passive when **either the TEC or REC becomes greater than or equal to 128**. Error Passive nodes are still able to take part in bus communications, but will instead transmit a **Passive Error Flag** upon detection of an error.

Bus-Off: A node becomes Bus-Off when the **TEC becomes greater than or equal to 256**. A Bus-Off node is unable influence the bus in any manner (essentially disconnected from the bus) thus eliminating itself from the bus. A node will remain in the Bus-Off state until it undergoes bus-off recovery.

Signals Lines and Transceiver

The TWAI controller does not contain a integrated transceiver. Therefore, to connect the TWAI controller to a TWAI bus, **an external transceiver is required**. The type of external transceiver used should depend on the application's physical layer specification (e.g. using SN65HVD23x transceivers for ISO 11898-2 compatibility).

The TWAI controller's interface consists of 4 signal lines known as **TX, RX, BUS-OFF, and CLKOUT**. These four signal lines can be routed through the GPIO Matrix to the ESP32's GPIO pads.

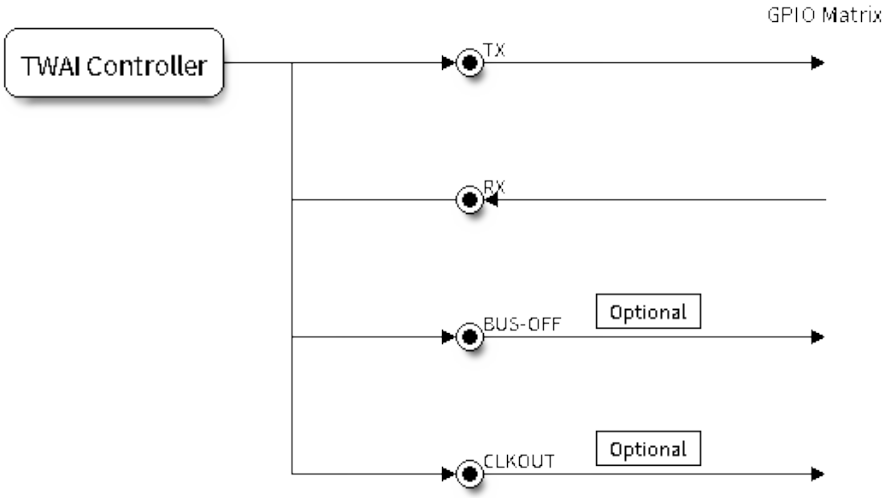

图 19: Signal lines of the TWAI controller

TX and RX: The TX and RX signal lines are required to interface with an external transceiver. Both signal lines represent/interpret a dominant bit as a low logic level (0V), and a recessive bit as a high logic level (3.3V).

BUS-OFF: The BUS-OFF signal line is **optional** and is set to a low logic level (0V) whenever the TWAI controller reaches a bus-off state. The BUS-OFF signal line is set to a high logic level (3.3V) otherwise.

CLKOUT: The CLKOUT signal line is **optional** and outputs a prescaled version of the controller's source clock (APB Clock).

注解: An external transceiver **must internally loopback the TX to RX** such that a change in logic level to the TX signal line can be observed on the RX line. Failing to do so will cause the TWAI controller to interpret differences in logic levels between the two signal lines as a loss in arbitration or a bit error.

Driver Configuration

This section covers how to configure the TWAI driver.

Operating Modes The TWAI driver supports the following modes of operations:

Normal Mode: The normal operating mode allows the TWAI controller to take part in bus activities such as transmitting and receiving messages/error frames. Acknowledgement from another node is required when transmitting a message.

No Ack Mode: The No Acknowledgement mode is similar to normal mode, however acknowledgements are not required for a message transmission to be considered successful. This mode is useful when self testing the TWAI controller (loopback of transmissions).

Listen Only Mode: This mode will prevent the TWAI controller from influencing the bus. Therefore, transmission of messages/acknowledgement/error frames will be disabled. However the TWAI controller will still be able to receive messages but will not acknowledge the message. This mode is suited for bus monitor applications.

Alerts The TWAI driver contains an alert feature that is used to notify the application layer of certain TWAI controller or TWAI bus events. Alerts are selectively enabled when the TWAI driver is installed, but can be reconfigured during runtime by calling *twai_reconfigure_alerts()*. The application can then wait for any enabled alerts to occur by calling *twai_read_alerts()*. The TWAI driver supports the following alerts:

表 3: TWAI Driver Alerts

Alert Flag	Description
TWAI_ALERT_TX_IDLE	No more messages queued for transmission
TWAI_ALERT_TX_SUCCESS	The previous transmission was successful
TWAI_ALERT_BELOW_ERR_WARN	Both error counters have dropped below error warning limit
TWAI_ALERT_ERR_ACTIVE	TWAI controller has become error active
TWAI_ALERT_RECOVERY_IN_PROGRESS	TWAI controller is undergoing bus recovery
TWAI_ALERT_BUS_RECOVERED	TWAI controller has successfully completed bus recovery
TWAI_ALERT_ARB_LOST	The previous transmission lost arbitration
TWAI_ALERT_ABOVE_ERR_WARN	One of the error counters have exceeded the error warning limit
TWAI_ALERT_BUS_ERROR	A (Bit, Stuff, CRC, Form, ACK) error has occurred on the bus
TWAI_ALERT_TX_FAILED	The previous transmission has failed
TWAI_ALERT_RX_QUEUE_FULL	The RX queue is full causing a received frame to be lost
TWAI_ALERT_ERR_PASS	TWAI controller has become error passive
TWAI_ALERT_BUS_OFF	Bus-off condition occurred. TWAI controller can no longer influence bus

---

注解: The TWAI controller's **error warning limit** is used to preemptively warn the application of bus errors before the error passive state is reached. By default, the TWAI driver sets the **error warning limit** to **96**. The

TWAI_ALERT_ABOVE_ERR_WARN is raised when the TEC or REC becomes larger then or equal to the error warning limit. The TWAI_ALERT_BELOW_ERR_WARN is raised when both TEC and REC return back to values below **96**.

注解: When enabling alerts, the TWAI_ALERT_AND_LOG flag can be used to cause the TWAI driver to log any raised alerts to UART. However, alert logging is disabled and TWAI_ALERT_AND_LOG if the *CONFIG_TWAI_ISR_IN_IRAM* option is enabled (see *Placing ISR into IRAM*).

注解: The TWAI_ALERT_ALL and TWAI_ALERT_NONE macros can also be used to enable/disable all alerts during configuration/reconfiguration.

Bit Timing The operating bit rate of the TWAI driver is configured using the *twai_timing_config_t* structure. The period of each bit is made up of multiple **time quanta**, and the period of a **time quanta** is determined by a prescaled version of the TWAI controller's source clock. A single bit contains the following segments in the following order:

1. The **Synchronization Segment** consists of a single time quanta
2. **Timing Segment 1** consists of 1 to 16 time quanta before sample point
3. **Timing Segment 2** consists of 1 to 8 time quanta after sample point

The **Baudrate Prescaler** is used to determine the period of each time quanta by dividing the TWAI controller's source clock (80 MHz APB clock). On the ESP32, the brp can be **any even number from 2 to 128**.

If the ESP32 is a revision 2 or later chip, the brp will **also support any multiple of 4 from 132 to 256**, and can be enabled by setting the *CONFIG_ESP32_REV_MIN* to revision 2 or higher.

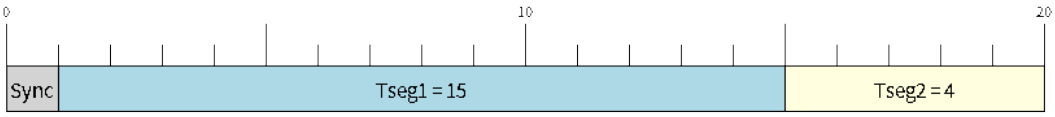

图 20: Bit timing configuration for 500kbit/s given BRP = 8

The sample point of a bit is located on the intersection of Timing Segment 1 and 2. Enabling **Triple Sampling** will cause 3 time quanta to be sampled per bit instead of 1 (extra samples are located at the tail end of Timing Segment 1).

The **Synchronization Jump Width** is used to determine the maximum number of time quanta a single bit time can be lengthened/shortened for synchronization purposes. sjw can **range from 1 to 4**.

注解: Multiple combinations of brp, tseg_1, tseg_2, and sjw can achieve the same bit rate. Users should tune these values to the physical characteristics of their bus by taking into account factors such as **propagation delay, node information processing time, and phase errors**.

Bit timing **macro initializers** are also available for commonly used bit rates. The following macro initializers are provided by the TWAI driver.

- TWAI_TIMING_CONFIG_1MBITS()
- TWAI_TIMING_CONFIG_800KBITS()
- TWAI_TIMING_CONFIG_500KBITS()
- TWAI_TIMING_CONFIG_250KBITS()
- TWAI_TIMING_CONFIG_125KBITS()
- TWAI_TIMING_CONFIG_100KBITS()

- `TWAI_TIMING_CONFIG_50KBITS()`
- `TWAI_TIMING_CONFIG_25KBITS()`

Revision 2 or later of the ESP32 also supports the following bit rates:

- `TWAI_TIMING_CONFIG_20KBITS()`
- `TWAI_TIMING_CONFIG_16KBITS()`
- `TWAI_TIMING_CONFIG_12_5KBITS()`

Acceptance Filter The TWAI controller contains a hardware acceptance filter which can be used to filter messages of a particular ID. A node that filters out a message **will not receive the message, but will still acknowledge it**. Acceptance filters can make a node more efficient by filtering out messages sent over the bus that are irrelevant to the node. The acceptance filter is configured using two 32-bit values within *`twai_filter_config_t`* known as the **acceptance code** and the **acceptance mask**.

The **acceptance code** specifies the bit sequence which a message's ID, RTR, and data bytes must match in order for the message to be received by the TWAI controller. The **acceptance mask** is a bit sequence specifying which bits of the acceptance code can be ignored. This allows for a messages of different IDs to be accepted by a single acceptance code.

The acceptance filter can be used under **Single or Dual Filter Mode**. Single Filter Mode will use the acceptance code and mask to define a single filter. This allows for the first two data bytes of a standard frame to be filtered, or the entirety of an extended frame's 29-bit ID. The following diagram illustrates how the 32-bit acceptance code and mask will be interpreted under Single Filter Mode (Note: The yellow and blue fields represent standard and extended frame formats respectively).

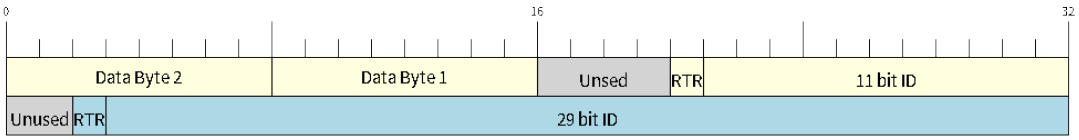

图 21: Bit layout of single filter mode (Right side MSBit)

Dual Filter Mode will use the acceptance code and mask to define two separate filters allowing for increased flexibility of ID's to accept, but does not allow for all 29-bits of an extended ID to be filtered. The following diagram illustrates how the 32-bit acceptance code and mask will be interpreted under **Dual Filter Mode** (Note: The yellow and blue fields represent standard and extended frame formats respectively).

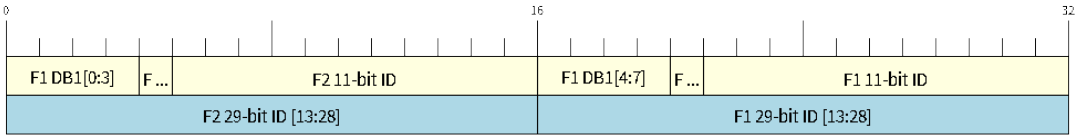

图 22: Bit layout of dual filter mode (Right side MSBit)

Disabling TX Queue The TX queue can be disabled during configuration by setting the `tx_queue_len` member of *`twai_general_config_t`* to `0`. This will allow applications that do not require message transmission to save a small amount of memory when using the TWAI driver.

Placing ISR into IRAM The TWAI driver's ISR (Interrupt Service Routine) can be placed into IRAM so that the ISR can still run whilst the cache is disabled. Placing the ISR into IRAM may be necessary to maintain the TWAI driver's functionality during lengthy cache disabling operations (such as SPI Flash writes, OTA updates etc). Whilst the cache is disabled, the ISR will continue to:

- Read received messages from the RX buffer and place them into the driver’ s RX queue.
- Load messages pending transmission from the driver’ s TX queue and write them into the TX buffer.

To place the TWAI driver’ s ISR, users must do the following:

- Enable the *CONFIG_TWAI_ISR_IN_IRAM* option using `idf.py menuconfig`.
- When calling `twai_driver_install()`, the *intr_flags* member of `twai_general_config_t` should set the `ESP_INTR_FLAG_IRAM` set.

注解: When the *CONFIG_TWAI_ISR_IN_IRAM* option is enabled, the TWAI driver will no longer log any alerts (i.e., the `TWAI_ALERT_AND_LOG` flag will not have any effect).

Driver Operation

The TWAI driver is designed with distinct states and strict rules regarding the functions or conditions that trigger a state transition. The following diagram illustrates the various states and their transitions.

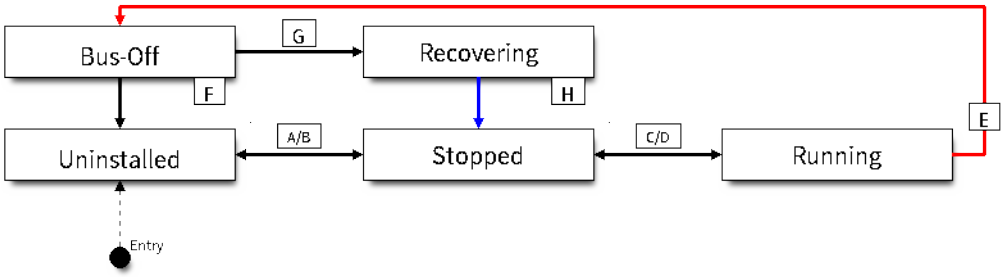

图 23: State transition diagram of the TWAI driver (see table below)

Label	Transition	Action/Condition
A	Uninstalled -> Stopped	`twai_driver_install()`
B	Stopped -> Uninstalled	`twai_driver_uninstall()`
C	Stopped -> Running	`twai_start()`
D	Running -> Stopped	`twai_stop()`
E	Running -> Bus-Off	Transmit Error Counter >= 256
F	Bus-Off -> Uninstalled	`twai_driver_uninstall()`
G	Bus-Off -> Recovering	`twai_initiate_recovery()`
H	Recovering -> Stopped	128 occurrences of 11 consecutive recessive bits.

Driver States **Uninstalled**: In the uninstalled state, no memory is allocated for the driver and the TWAI controller is powered OFF.

Stopped: In this state, the TWAI controller is powered ON and the TWAI driver has been installed. However the TWAI controller will be unable to take part in any bus activities such as transmitting, receiving, or acknowledging messages.

Running: In the running state, the TWAI controller is able to take part in bus activities. Therefore messages can be transmitted/received/acknowledged. Furthermore the TWAI controller will be able to transmit error frames upon detection of errors on the bus.

Bus-Off: The bus-off state is automatically entered when the TWAI controller’ s Transmit Error Counter becomes greater than or equal to 256. The bus-off state indicates the occurrence of severe errors on the bus or in the TWAI

controller. Whilst in the bus-off state, the TWAI controller will be unable to take part in any bus activities. To exit the bus-off state, the TWAI controller must undergo the bus recovery process.

Recovering: The recovering state is entered when the TWAI controller undergoes bus recovery. The TWAI controller/TWAI driver will remain in the recovering state until the 128 occurrences of 11 consecutive recessive bits is observed on the bus.

Message Fields and Flags The TWAI driver distinguishes different types of messages by using the various bit field members of the *twai_message_t* structure. These bit field members determine whether a message is in standard or extended format, a remote frame, and the type of transmission to use when transmitting such a message.

These bit field members can also be toggled using the the *flags* member of *twai_message_t* and the following message flags:

Message Flag	Description
TWAI_MSG_FLAG_EXTD	Message is in Extended Frame Format (29bit ID)
TWAI_MSG_FLAG_RTR	Message is a Remote Frame (Remote Transmission Request)
TWAI_MSG_FLAG_SS	Transmit message using Single Shot Transmission (Message will not be retransmitted upon error or loss of arbitration). Unused for received message.
TWAI_MSG_FLAG_SELF	Transmit message using Self Reception Request (Transmitted message will also received by the same node). Unused for received message.
TWAI_MSG_FLAG_DLC_NON_COMP	Message's Data length code is larger than 8. This will break compliance with TWAI
TWAI_MSG_FLAG_NONE	Clears all bit fields. Equivalent to a Standard Frame Format (11bit ID) Data Frame.

Examples

Configuration & Installation The following code snippet demonstrates how to configure, install, and start the TWAI driver via the use of the various configuration structures, macro initializers, the *twai_driver_install()* function, and the *twai_start()* function.

```
#include "driver/gpio.h"
#include "driver/twai.h"

void app_main()
{
    //Initialize configuration structures using macro initializers
    twai_general_config_t g_config = TWAI_GENERAL_CONFIG_DEFAULT(GPIO_NUM_21, GPIO_
↪NUM_22, TWAI_MODE_NORMAL);
    twai_timing_config_t t_config = TWAI_TIMING_CONFIG_500KBITS();
    twai_filter_config_t f_config = TWAI_FILTER_CONFIG_ACCEPT_ALL();

    //Install TWAI driver
    if (twai_driver_install(&g_config, &t_config, &f_config) == ESP_OK) {
        printf("Driver installed\n");
    } else {
        printf("Failed to install driver\n");
        return;
    }

    //Start TWAI driver
    if (twai_start() == ESP_OK) {
        printf("Driver started\n");
    } else {
        printf("Failed to start driver\n");
        return;
    }
```

(下页继续)

(续上页)

```
    ...

}
```

The usage of macro initializers is not mandatory and each of the configuration structures can be manually.

Message Transmission The following code snippet demonstrates how to transmit a message via the usage of the *twai_message_t* type and *twai_transmit()* function.

```
#include "driver/twai.h"

...

//Configure message to transmit
twai_message_t message;
message.identifier = 0xAAAA;
message.extd = 1;
message.data_length_code = 4;
for (int i = 0; i < 4; i++) {
    message.data[i] = 0;
}

//Queue message for transmission
if (twai_transmit(&message, pdMS_TO_TICKS(1000)) == ESP_OK) {
    printf("Message queued for transmission\n");
} else {
    printf("Failed to queue message for transmission\n");
}
```

Message Reception The following code snippet demonstrates how to receive a message via the usage of the *twai_message_t* type and *twai_receive()* function.

```
#include "driver/twai.h"

...

//Wait for message to be received
twai_message_t message;
if (twai_receive(&message, pdMS_TO_TICKS(10000)) == ESP_OK) {
    printf("Message received\n");
} else {
    printf("Failed to receive message\n");
    return;
}

//Process received message
if (message.extd) {
    printf("Message is in Extended Format\n");
} else {
    printf("Message is in Standard Format\n");
}
printf("ID is %d\n", message.identifier);
if (!(message.rtr)) {
    for (int i = 0; i < message.data_length_code; i++) {
        printf("Data byte %d = %d\n", i, message.data[i]);
    }
}
```

Reconfiguring and Reading Alerts The following code snippet demonstrates how to reconfigure and read TWAI driver alerts via the use of the *twai_reconfigure_alerts()* and *twai_read_alerts()* functions.

```
#include "driver/twai.h"

...

//Reconfigure alerts to detect Error Passive and Bus-Off error states
uint32_t alerts_to_enable = TWAI_ALERT_ERR_PASS | TWAI_ALERT_BUS_OFF;
if (twai_reconfigure_alerts(alerts_to_enable, NULL) == ESP_OK) {
    printf("Alerts reconfigured\n");
} else {
    printf("Failed to reconfigure alerts");
}

//Block indefinitely until an alert occurs
uint32_t alerts_triggered;
twai_read_alerts(&alerts_triggered, portMAX_DELAY);
```

Stop and Uninstall The following code demonstrates how to stop and uninstall the TWAI driver via the use of the *twai_stop()* and *twai_driver_uninstall()* functions.

```
#include "driver/twai.h"

...

//Stop the TWAI driver
if (twai_stop() == ESP_OK) {
    printf("Driver stopped\n");
} else {
    printf("Failed to stop driver\n");
    return;
}

//Uninstall the TWAI driver
if (twai_driver_uninstall() == ESP_OK) {
    printf("Driver uninstalled\n");
} else {
    printf("Failed to uninstall driver\n");
    return;
}
```

Multiple ID Filter Configuration The acceptance mask in *twai_filter_config_t* can be configured such that two or more IDs will be accepted for a single filter. For a particular filter to accept multiple IDs, the conflicting bit positions amongst the IDs must be set in the acceptance mask. The acceptance code can be set to any one of the IDs.

The following example shows how the calculate the acceptance mask given multiple IDs:

```
ID1 =  11'b101 1010 0000
ID2 =  11'b101 1010 0001
ID3 =  11'b101 1010 0100
ID4 =  11'b101 1010 1000
//Acceptance Mask
MASK = 11'b000 0000 1101
```

Application Examples **Network Example:** The TWAI Network example demonstrates communication between two ESP32s using the TWAI driver API. One TWAI node acts as a network master that initiates and ceases the transfer of a data from another node acting as a network slave. The example can be found via peripherals/twai/twai_network.

Alert and Recovery Example: This example demonstrates how to use the TWAI driver's alert and bus-off recovery API. The example purposely introduces errors on the bus to put the TWAI controller into the Bus-Off state. An alert is used to detect the Bus-Off state and trigger the bus recovery process. The example can be found via peripherals/twai/twai_alert_and_recovery.

Self Test Example: This example uses the No Acknowledge Mode and Self Reception Request to cause the TWAI controller to send and simultaneously receive a series of messages. This example can be used to verify if the connections between the TWAI controller and the external transceiver are working correctly. The example can be found via peripherals/twai/twai_self_test.

API Reference

Header File

- hal/include/hal/twai_types.h

Structures

struct twai_message_t

Structure to store a TWAI message.

Note The flags member is deprecated

Public Members

uint32_t **extd** : 1
Extended Frame Format (29bit ID)

uint32_t **rtr** : 1
Message is a Remote Frame

uint32_t **ss** : 1
Transmit as a Single Shot Transmission. Unused for received.

uint32_t **self** : 1
Transmit as a Self Reception Request. Unused for received.

uint32_t **dlc_non_comp** : 1
Message's Data length code is larger than 8. This will break compliance with ISO 11898-1

uint32_t **reserved** : 27
Reserved bits

uint32_t **flags**
Deprecated: Alternate way to set bits using message flags

uint32_t **identifier**
11 or 29 bit identifier

uint8_t **data_length_code**
Data length code

uint8_t **data**[**TWAI_FRAME_MAX_DLC**]
Data bytes (not relevant in RTR frame)

struct twai_timing_config_t

Structure for bit timing configuration of the TWAI driver.

Note Macro initializers are available for this structure

Public Members

uint32_t **brp**
Baudrate prescaler (i.e., APB clock divider). Any even number from 2 to 128 for ESP32, 2 to 32768 for ESP32S2. For ESP32 Rev 2 or later, multiples of 4 from 132 to 256 are also supported

uint8_t **tseg_1**
Timing segment 1 (Number of time quanta, between 1 to 16)

uint8_t **tseg_2**
Timing segment 2 (Number of time quanta, 1 to 8)

uint8_t **sjw**
Synchronization Jump Width (Max time quanta jump for synchronize from 1 to 4)

bool **triple_sampling**
Enables triple sampling when the TWAI controller samples a bit

struct twai_filter_config_t
Structure for acceptance filter configuration of the TWAI driver (see documentation)

Note Macro initializers are available for this structure

Public Members

uint32_t **acceptance_code**
32-bit acceptance code

uint32_t **acceptance_mask**
32-bit acceptance mask

bool **single_filter**
Use Single Filter Mode (see documentation)

Macros

TWAI_EXTD_ID_MASK
TWAI Constants.

Bit mask for 29 bit Extended Frame Format ID

TWAI_STD_ID_MASK
Bit mask for 11 bit Standard Frame Format ID

TWAI_FRAME_MAX_DLC
Max data bytes allowed in TWAI

TWAI_FRAME_EXTD_ID_LEN_BYTES
EFF ID requires 4 bytes (29bit)

TWAI_FRAME_STD_ID_LEN_BYTES
SFF ID requires 2 bytes (11bit)

TWAI_ERR_PASS_THRESH
Error counter threshold for error passive

Enumerations

enum twai_mode_t
TWAI Controller operating modes.

Values:

TWAI_MODE_NORMAL
Normal operating mode where TWAI controller can send/receive/acknowledge messages

TWAI_MODE_NO_ACK
Transmission does not require acknowledgment. Use this mode for self testing

TWAI_MODE_LISTEN_ONLY
The TWAI controller will not influence the bus (No transmissions or acknowledgments) but can receive messages

Header File

- driver/include/driver/twai.h

Functions

esp_err_t **twai_driver_install**(**const** *twai_general_config_t* **g_config*, **const** *twai_timing_config_t* **t_config*, **const** *twai_filter_config_t* **f_config*)

Install TWAI driver.

This function installs the TWAI driver using three configuration structures. The required memory is allocated and the TWAI driver is placed in the stopped state after running this function.

Note Macro initializers are available for the configuration structures (see documentation)
Note To reinstall the TWAI driver, call twai_driver_uninstall() first
Return
- ESP_OK: Successfully installed TWAI driver
- ESP_ERR_INVALID_ARG: Arguments are invalid
- ESP_ERR_NO_MEM: Insufficient memory
- ESP_ERR_INVALID_STATE: Driver is already installed

Parameters
- `[in] g_config`: General configuration structure
- `[in] t_config`: Timing configuration structure
- `[in] f_config`: Filter configuration structure

esp_err_t **twai_driver_uninstall**(void)

Uninstall the TWAI driver.

This function uninstalls the TWAI driver, freeing the memory utilized by the driver. This function can only be called when the driver is in the stopped state or the bus-off state.

Warning The application must ensure that no tasks are blocked on TX/RX queues or alerts when this function is called.
Return
- ESP_OK: Successfully uninstalled TWAI driver
- ESP_ERR_INVALID_STATE: Driver is not in stopped/bus-off state, or is not installed

esp_err_t **twai_start**(void)

Start the TWAI driver.

This function starts the TWAI driver, putting the TWAI driver into the running state. This allows the TWAI driver to participate in TWAI bus activities such as transmitting/receiving messages. The TX and RX queue are reset in this function, clearing any messages that are unread or pending transmission. This function can only be called when the TWAI driver is in the stopped state.

Return
- ESP_OK: TWAI driver is now running
- ESP_ERR_INVALID_STATE: Driver is not in stopped state, or is not installed

esp_err_t **twai_stop**(void)

Stop the TWAI driver.

This function stops the TWAI driver, preventing any further message from being transmitted or received until twai_start() is called. Any messages in the TX queue are cleared. Any messages in the RX queue should be read by the application after this function is called. This function can only be called when the TWAI driver is in the running state.

Warning A message currently being transmitted/received on the TWAI bus will be ceased immediately. This may lead to other TWAI nodes interpreting the unfinished message as an error.

Return

- ESP_OK: TWAI driver is now Stopped
- ESP_ERR_INVALID_STATE: Driver is not in running state, or is not installed

esp_err_t **twai_transmit**(**const** *twai_message_t* **message*, TickType_t *ticks_to_wait*)

Transmit a TWAI message.

This function queues a TWAI message for transmission. Transmission will start immediately if no other messages are queued for transmission. If the TX queue is full, this function will block until more space becomes available or until it times out. If the TX queue is disabled (TX queue length = 0 in configuration), this function will return immediately if another message is undergoing transmission. This function can only be called when the TWAI driver is in the running state and cannot be called under Listen Only Mode.

Note This function does not guarantee that the transmission is successful. The TX_SUCCESS/TX_FAILED alert can be enabled to alert the application upon the success/failure of a transmission.

Note The TX_IDLE alert can be used to alert the application when no other messages are awaiting transmission.

Return

- ESP_OK: Transmission successfully queued/initiated
- ESP_ERR_INVALID_ARG: Arguments are invalid
- ESP_ERR_TIMEOUT: Timed out waiting for space on TX queue
- ESP_FAIL: TX queue is disabled and another message is currently transmitting
- ESP_ERR_INVALID_STATE: TWAI driver is not in running state, or is not installed
- ESP_ERR_NOT_SUPPORTED: Listen Only Mode does not support transmissions

Parameters

- `[in] message`: Message to transmit
- `[in] ticks_to_wait`: Number of FreeRTOS ticks to block on the TX queue

esp_err_t **twai_receive**(*twai_message_t* **message*, TickType_t *ticks_to_wait*)

Receive a TWAI message.

This function receives a message from the RX queue. The flags field of the message structure will indicate the type of message received. This function will block if there are no messages in the RX queue

Warning The flags field of the received message should be checked to determine if the received message contains any data bytes.

Return

- ESP_OK: Message successfully received from RX queue
- ESP_ERR_TIMEOUT: Timed out waiting for message
- ESP_ERR_INVALID_ARG: Arguments are invalid
- ESP_ERR_INVALID_STATE: TWAI driver is not installed

Parameters

- `[out] message`: Received message
- `[in] ticks_to_wait`: Number of FreeRTOS ticks to block on RX queue

esp_err_t **twai_read_alerts**(uint32_t **alerts*, TickType_t *ticks_to_wait*)

Read TWAI driver alerts.

This function will read the alerts raised by the TWAI driver. If no alert has been issued when this function is called, this function will block until an alert occurs or until it timeouts.

Note Multiple alerts can be raised simultaneously. The application should check for all alerts that have been enabled.

Return

- ESP_OK: Alerts read
- ESP_ERR_TIMEOUT: Timed out waiting for alerts
- ESP_ERR_INVALID_ARG: Arguments are invalid
- ESP_ERR_INVALID_STATE: TWAI driver is not installed

Parameters

- `[out] alerts`: Bit field of raised alerts (see documentation for alert flags)
- `[in] ticks_to_wait`: Number of FreeRTOS ticks to block for alert

esp_err_t **twai_reconfigure_alerts**(uint32_t *alerts_enabled*, uint32_t **current_alerts*)
Reconfigure which alerts are enabled.

This function reconfigures which alerts are enabled. If there are alerts which have not been read whilst reconfiguring, this function can read those alerts.

Return
- ESP_OK: Alerts reconfigured
- ESP_ERR_INVALID_STATE: TWAI driver is not installed

Parameters
- `[in] alerts_enabled`: Bit field of alerts to enable (see documentation for alert flags)
- `[out] current_alerts`: Bit field of currently raised alerts. Set to NULL if unused

esp_err_t **twai_initiate_recovery**(void)
Start the bus recovery process.

This function initiates the bus recovery process when the TWAI driver is in the bus-off state. Once initiated, the TWAI driver will enter the recovering state and wait for 128 occurrences of the bus-free signal on the TWAI bus before returning to the stopped state. This function will reset the TX queue, clearing any messages pending transmission.

Note The BUS_RECOVERED alert can be enabled to alert the application when the bus recovery process completes.

Return
- ESP_OK: Bus recovery started
- ESP_ERR_INVALID_STATE: TWAI driver is not in the bus-off state, or is not installed

esp_err_t **twai_get_status_info**(*twai_status_info_t* **status_info*)
Get current status information of the TWAI driver.

Return
- ESP_OK: Status information retrieved
- ESP_ERR_INVALID_ARG: Arguments are invalid
- ESP_ERR_INVALID_STATE: TWAI driver is not installed

Parameters
- `[out] status_info`: Status information

esp_err_t **twai_clear_transmit_queue**(void)
Clear the transmit queue.

This function will clear the transmit queue of all messages.

Note The transmit queue is automatically cleared when twai_stop() or twai_initiate_recovery() is called.

Return
- ESP_OK: Transmit queue cleared
- ESP_ERR_INVALID_STATE: TWAI driver is not installed or TX queue is disabled

esp_err_t **twai_clear_receive_queue**(void)
Clear the receive queue.

This function will clear the receive queue of all messages.

Note The receive queue is automatically cleared when twai_start() is called.

Return
- ESP_OK: Transmit queue cleared
- ESP_ERR_INVALID_STATE: TWAI driver is not installed

Structures

struct twai_general_config_t
Structure for general configuration of the TWAI driver.

Note Macro initializers are available for this structure

Public Members

twai_mode_t **mode**
Mode of TWAI controller

gpio_num_t **tx_io**
Transmit GPIO number

gpio_num_t **rx_io**
Receive GPIO number

gpio_num_t **clkout_io**
CLKOUT GPIO number (optional, set to -1 if unused)

gpio_num_t **bus_off_io**
Bus off indicator GPIO number (optional, set to -1 if unused)

uint32_t **tx_queue_len**
Number of messages TX queue can hold (set to 0 to disable TX Queue)

uint32_t **rx_queue_len**
Number of messages RX queue can hold

uint32_t **alerts_enabled**
Bit field of alerts to enable (see documentation)

uint32_t **clkout_divider**
CLKOUT divider. Can be 1 or any even number from 2 to 14 (optional, set to 0 if unused)

int **intr_flags**
Interrupt flags to set the priority of the driver's ISR. Note that to use the ESP_INTR_FLAG_IRAM, the CONFIG_TWAI_ISR_IN_IRAM option should be enabled first.

struct twai_status_info_t
Structure to store status information of TWAI driver.

Public Members

twai_state_t **state**
Current state of TWAI controller (Stopped/Running/Bus-Off/Recovery)

uint32_t **msgs_to_tx**
Number of messages queued for transmission or awaiting transmission completion

uint32_t **msgs_to_rx**
Number of messages in RX queue waiting to be read

uint32_t **tx_error_counter**
Current value of Transmit Error Counter

uint32_t **rx_error_counter**
Current value of Receive Error Counter

uint32_t **tx_failed_count**
Number of messages that failed transmissions

uint32_t **rx_missed_count**
Number of messages that were lost due to a full RX queue (or errata workaround if enabled)

uint32_t **rx_overrun_count**
Number of messages that were lost due to a RX FIFO overrun

uint32_t **arb_lost_count**
Number of instances arbitration was lost

uint32_t **bus_error_count**
Number of instances a bus error has occurred

Macros

TWAI_IO_UNUSED
Marks GPIO as unused in TWAI configuration

Enumerations

enum twai_state_t
TWAI driver states.

Values:

TWAI_STATE_STOPPED
Stopped state. The TWAI controller will not participate in any TWAI bus activities

TWAI_STATE_RUNNING
Running state. The TWAI controller can transmit and receive messages

TWAI_STATE_BUS_OFF
Bus-off state. The TWAI controller cannot participate in bus activities until it has recovered

TWAI_STATE_RECOVERING
Recovering state. The TWAI controller is undergoing bus recovery

2.3.20 UART

Overview

A Universal Asynchronous Receiver/Transmitter (UART) is a hardware feature that handles communication (i.e., timing requirements and data framing) using widely-adapted asynchronous serial communication interfaces, such as RS232, RS422, RS485. A UART provides a widely adopted and cheap method to realize full-duplex or half-duplex data exchange among different devices.

The ESP32 chip has three UART controllers (UART0, UART1, and UART2) that feature an identical set of registers for ease of programming and flexibility.

Each UART controller is independently configurable with parameters such as baud rate, data bit length, bit ordering, number of stop bits, parity bit etc. All the controllers are compatible with UART-enabled devices from various manufacturers and can also support Infrared Data Association protocols (IrDA).

Functional Overview

The following overview describes how to establish communication between an ESP32 and other UART devices using the functions and data types of the UART driver. The overview reflects a typical programming workflow and is broken down into the sections provided below:

1. *Setting Communication Parameters* - Setting baud rate, data bits, stop bits, etc.
2. *Setting Communication Pins* - Assigning pins for connection to a device.
3. *Driver Installation* - Allocating ESP32's resources for the UART driver.
4. *Running UART Communication* - Sending / receiving data
5. *Using Interrupts* - Triggering interrupts on specific communication events
6. *Deleting a Driver* - Freeing allocated resources if a UART communication is no longer required

Steps 1 to 3 comprise the configuration stage. Step 4 is where the UART starts operating. Steps 5 and 6 are optional.

The UART driver's functions identify each of the UART controllers using `uart_port_t`. This identification is needed for all the following function calls.

Setting Communication Parameters UART communication parameters can be configured all in a single step or individually in multiple steps.

Single Step Call the function *uart_param_config()* and pass to it a *uart_config_t* structure. The *uart_config_t* structure should contain all the required parameters. See the example below.

```
const int uart_num = UART_NUM_2;
uart_config_t uart_config = {
    .baud_rate = 115200,
    .data_bits = UART_DATA_8_BITS,
    .parity = UART_PARITY_DISABLE,
    .stop_bits = UART_STOP_BITS_1,
    .flow_ctrl = UART_HW_FLOWCTRL_CTS_RTS,
    .rx_flow_ctrl_thresh = 122,
};
// Configure UART parameters
ESP_ERROR_CHECK(uart_param_config(uart_num, &uart_config));
```

Multiple Steps Configure specific parameters individually by calling a dedicated function from the table given below. These functions are also useful if re-configuring a single parameter.

表 4: Functions for Configuring specific parameters individually

Parameter to Configure	Function
Baud rate	*uart_set_baudrate()*
Number of transmitted bits	*uart_set_word_length()* selected out of *uart_word_length_t*
Parity control	*uart_set_parity()* selected out of *uart_parity_t*
Number of stop bits	*uart_set_stop_bits()* selected out of *uart_stop_bits_t*
Hardware flow control mode	*uart_set_hw_flow_ctrl()* selected out of *uart_hw_flowcontrol_t*
Communication mode	*uart_set_mode()* selected out of *uart_mode_t*

Each of the above functions has a _get_ counterpart to check the currently set value. For example, to check the current baud rate value, call *uart_get_baudrate()*.

Setting Communication Pins After setting communication parameters, configure the physical GPIO pins to which the other UART device will be connected. For this, call the function *uart_set_pin()* and specify the GPIO pin numbers to which the driver should route the Tx, Rx, RTS, and CTS signals. If you want to keep a currently allocated pin number for a specific signal, pass the macro *UART_PIN_NO_CHANGE*.

The same macro should be specified for pins that will not be used.

```
// Set UART pins(TX: IO17 (UART2 default), RX: IO16 (UART2 default), RTS: IO18,␣
↪CTS: IO19)
ESP_ERROR_CHECK(uart_set_pin(UART_NUM_2, UART_PIN_NO_CHANGE, UART_PIN_NO_CHANGE,␣
↪18, 19));
```

Driver Installation Once the communication pins are set, install the driver by calling *uart_driver_install()* and specify the following parameters:

- Size of Tx ring buffer
- Size of Rx ring buffer
- Event queue handle and size
- Flags to allocate an interrupt

The function will allocate the required internal resources for the UART driver.

```
// Setup UART buffered IO with event queue
const int uart_buffer_size = (1024 * 2);
QueueHandle_t uart_queue;
// Install UART driver using an event queue here
```

(下页继续)

(续上页)

```
ESP_ERROR_CHECK(uart_driver_install(UART_NUM_2, uart_buffer_size, \
                                        uart_buffer_size, 10, &uart_queue, 0));
```

Once this step is complete, you can connect the external UART device and check the communication.

Running UART Communication Serial communication is controlled by each UART controller's finite state machine (FSM).

The process of sending data involves the following steps:

1. Write data into Tx FIFO buffer
2. FSM serializes the data
3. FSM sends the data out

The process of receiving data is similar, but the steps are reversed:

1. FSM processes an incoming serial stream and parallelizes it
2. FSM writes the data into Rx FIFO buffer
3. Read the data from Rx FIFO buffer

Therefore, an application will be limited to writing and reading data from a respective buffer using *uart_write_bytes()* and *uart_read_bytes()* respectively, and the FSM will do the rest.

Transmitting After preparing the data for transmission, call the function *uart_write_bytes()* and pass the data buffer's address and data length to it. The function will copy the data to the Tx ring buffer (either immediately or after enough space is available), and then exit. When there is free space in the Tx FIFO buffer, an interrupt service routine (ISR) moves the data from the Tx ring buffer to the Tx FIFO buffer in the background. The code below demonstrates the use of this function.

```
// Write data to UART.
char* test_str = "This is a test string.\n";
uart_write_bytes(uart_num, (const char*)test_str, strlen(test_str));
```

The function *uart_write_bytes_with_break()* is similar to *uart_write_bytes()* but adds a serial break signal at the end of the transmission. A 'serial break signal' means holding the Tx line low for a period longer than one data frame.

```
// Write data to UART, end with a break signal.
uart_write_bytes_with_break(uart_num, "test break\n",strlen("test break\n"), 100);
```

Another function for writing data to the Tx FIFO buffer is *uart_tx_chars()*. Unlike *uart_write_bytes()*, this function will not block until space is available. Instead, it will write all data which can immediately fit into the hardware Tx FIFO, and then return the number of bytes that were written.

There is a 'companion' function *uart_wait_tx_done()* that monitors the status of the Tx FIFO buffer and returns once it is empty.

```
// Wait for packet to be sent
const int uart_num = UART_NUM_2;
ESP_ERROR_CHECK(uart_wait_tx_done(uart_num, 100)); // wait timeout is 100 RTOS␣
↪ticks (TickType_t)
```

Receiving Once the data is received by the UART and saved in the Rx FIFO buffer, it needs to be retrieved using the function *uart_read_bytes()*. Before reading data, you can check the number of bytes available in the Rx FIFO buffer by calling *uart_get_buffered_data_len()*. An example of using these functions is given below.

```
// Read data from UART.
const int uart_num = UART_NUM_2;
uint8_t data[128];
int length = 0;
ESP_ERROR_CHECK(uart_get_buffered_data_len(uart_num, (size_t*)&length));
length = uart_read_bytes(uart_num, data, length, 100);
```

If the data in the Rx FIFO buffer is no longer needed, you can clear the buffer by calling *uart_flush()*.

Software Flow Control If the hardware flow control is disabled, you can manually set the RTS and DTR signal levels by using the functions *uart_set_rts()* and *uart_set_dtr()* respectively.

Communication Mode Selection The UART controller supports a number of communication modes. A mode can be selected using the function *uart_set_mode()*. Once a specific mode is selected, the UART driver will handle the behavior of a connected UART device accordingly. As an example, it can control the RS485 driver chip using the RTS line to allow half-duplex RS485 communication.

```
// Setup UART in rs485 half duplex mode
ESP_ERROR_CHECK(uart_set_mode(uart_num, UART_MODE_RS485_HALF_DUPLEX));
```

Using Interrupts There are many interrupts that can be generated following specific UART states or detected errors. The full list of available interrupts is provided in *ESP32 Technical Reference Manual* > *UART Controller (UART)* > *UART Interrupts* and *UHCI Interrupts* [PDF]. You can enable or disable specific interrupts by calling *uart_enable_intr_mask()* or *uart_disable_intr_mask()* respectively. The mask of all interrupts is available as UART_INTR_MASK.

By default, the *uart_driver_install()* function installs the driver's internal interrupt handler to manage the Tx and Rx ring buffers and provides high-level API functions like events (see below). It is also possible to register a lower level interrupt handler instead using *uart_isr_register()*, and to free it again using *uart_isr_free()*. Some UART driver functions which use the Tx and Rx ring buffers, events, etc. will not automatically work in this case - it is necessary to handle the interrupts directly in the ISR. Inside the custom handler implementation, clear the interrupt status bits using *uart_clear_intr_status()*.

The API provides a convenient way to handle specific interrupts discussed in this document by wrapping them into dedicated functions:

- **Event detection**: There are several events defined in *uart_event_type_t* that may be reported to a user application using the FreeRTOS queue functionality. You can enable this functionality when calling *uart_driver_install()* described in *Driver Installation*. An example of using Event detection can be found in peripherals/uart/uart_events.
- **FIFO space threshold or transmission timeout reached**: The Tx and Rx FIFO buffers can trigger an interrupt when they are filled with a specific number of characters, or on a timeout of sending or receiving data. To use these interrupts, do the following:
  - Configure respective threshold values of the buffer length and timeout by entering them in the structure *uart_intr_config_t* and calling *uart_intr_config()*
  - Enable the interrupts using the functions *uart_enable_tx_intr()* and *uart_enable_rx_intr()*
  - Disable these interrupts using the corresponding functions *uart_disable_tx_intr()* or *uart_disable_rx_intr()*
- **Pattern detection**: An interrupt triggered on detecting a 'pattern' of the same character being received/sent repeatedly for a number of times. This functionality is demonstrated in the example peripherals/uart/uart_events. It can be used, e.g., to detect a command string followed by a specific number of identical characters (the 'pattern') added at the end of the command string. The following functions are available:
  - Configure and enable this interrupt using *uart_enable_pattern_det_intr()*
  - Disable the interrupt using *uart_disable_pattern_det_intr()*

Macros The API also defines several macros. For example, *UART_FIFO_LEN* defines the length of hardware FIFO buffers; *UART_BITRATE_MAX* gives the maximum baud rate supported by the UART controllers, etc.

Deleting a Driver If the communication established with *uart_driver_install()* is no longer required, the driver can be removed to free allocated resources by calling *uart_driver_delete()*.

Overview of RS485 specific communication options

注解: The following section will use `[UART_REGISTER_NAME].[UART_FIELD_BIT]` to refer to UART register fields/bits. For more information on a specific option bit, see *ESP32 Technical Reference Manual* > *UART Controller (UART)* > *Register Summary* [PDF]. Use the register name to navigate to the register description and then find the field/bit.

- `UART_RS485_CONF_REG.UART_RS485_EN`: setting this bit enables RS485 communication mode support.
- `UART_RS485_CONF_REG.UART_RS485TX_RX_EN`: if this bit is set, the transmitter's output signal loops back to the receiver's input signal.
- `UART_RS485_CONF_REG.UART_RS485RXBY_TX_EN`: if this bit is set, the transmitter will still be sending data if the receiver is busy (remove collisions automatically by hardware).

The ESP32's RS485 UART hardware can detect signal collisions during transmission of a datagram and generate the interrupt `UART_RS485_CLASH_INT` if this interrupt is enabled. The term collision means that a transmitted datagram is not equal to the one received on the other end. Data collisions are usually associated with the presence of other active devices on the bus or might occur due to bus errors.

The collision detection feature allows handling collisions when their interrupts are activated and triggered. The interrupts `UART_RS485_FRM_ERR_INT` and `UART_RS485_PARITY_ERR_INT` can be used with the collision detection feature to control frame errors and parity bit errors accordingly in RS485 mode. This functionality is supported in the UART driver and can be used by selecting the *UART_MODE_RS485_APP_CTRL* mode (see the function *uart_set_mode()*).

The collision detection feature can work with circuit A and circuit C (see Section *Interface Connection Options*). In the case of using circuit A or B, the RTS pin connected to the DE pin of the bus driver should be controlled by the user application. Use the function *uart_get_collision_flag()* to check if the collision detection flag has been raised.

The ESP32 UART controllers themselves do not support half-duplex communication as they cannot provide automatic control of the RTS pin connected to the ~RE/DE input of RS485 bus driver. However, half-duplex communication can be achieved via software control of the RTS pin by the UART driver. This can be enabled by selecting the *UART_MODE_RS485_HALF_DUPLEX* mode when calling *uart_set_mode()*.

Once the host starts writing data to the Tx FIFO buffer, the UART driver automatically asserts the RTS pin (logic 1); once the last bit of the data has been transmitted, the driver de-asserts the RTS pin (logic 0). To use this mode, the software would have to disable the hardware flow control function. This mode works with all the used circuits shown below.

Interface Connection Options This section provides example schematics to demonstrate the basic aspects of ESP32's RS485 interface connection.

注解:

- The schematics below do **not** necessarily contain **all required elements**.
- The **analog devices** ADM483 & ADM2483 are examples of common RS485 transceivers and **can be replaced** with other similar transceivers.

Circuit A: Collision Detection Circuit

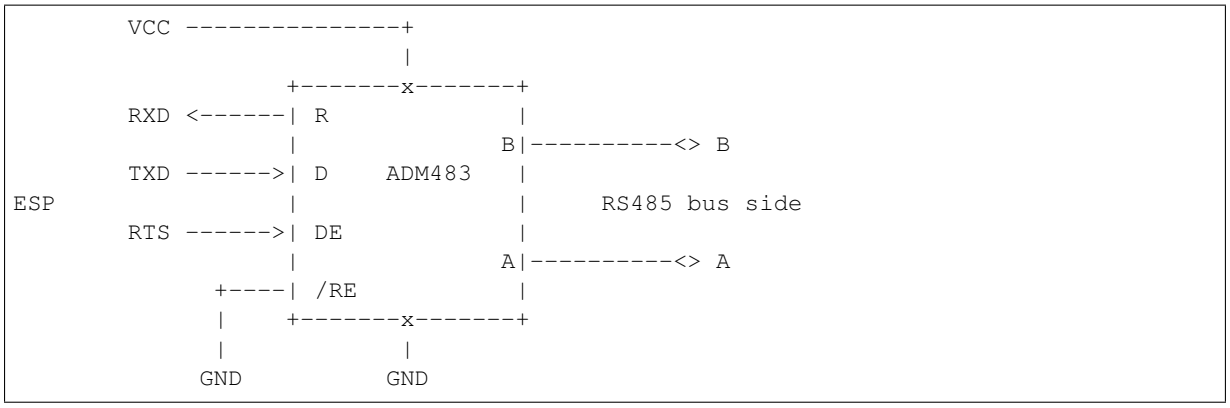

This circuit is preferable because it allows for collision detection and is quite simple at the same time. The receiver in the line driver is constantly enabled, which allows the UART to monitor the RS485 bus. Echo suppression is performed by the UART peripheral when the bit `UART_RS485_CONF_REG.UART_RS485TX_RX_EN` is enabled.

Circuit B: Manual Switching Transmitter/Receiver Without Collision Detection

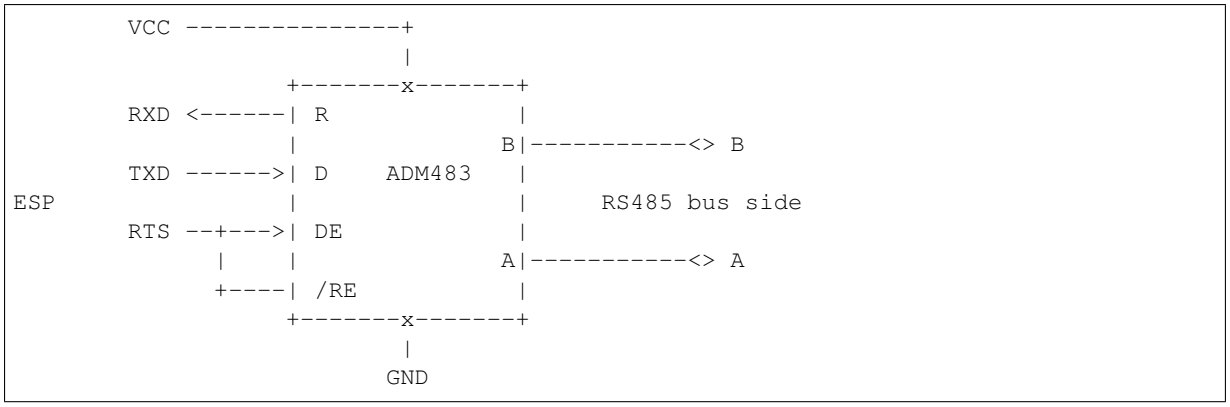

This circuit does not allow for collision detection. It suppresses the null bytes that the hardware receives when the bit `UART_RS485_CONF_REG.UART_RS485TX_RX_EN` is set. The bit `UART_RS485_CONF_REG.UART_RS485RXBY_TX_EN` is not applicable in this case.

Circuit C: Auto Switching Transmitter/Receiver

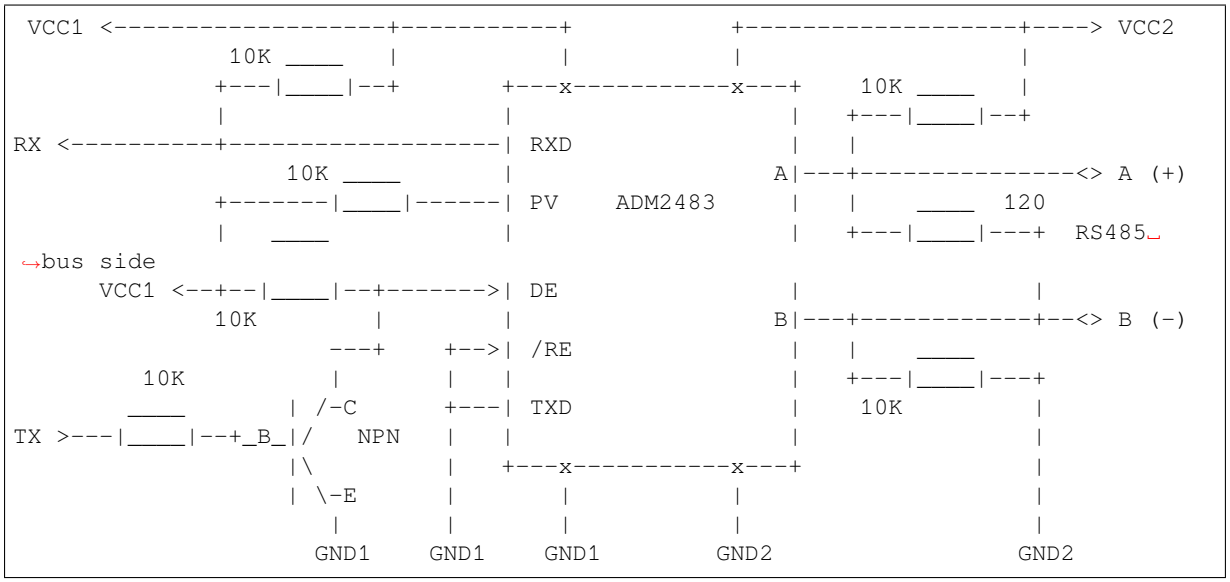

This galvanically isolated circuit does not require RTS pin control by a software application or driver because it controls the transceiver direction automatically. However, it requires suppressing null bytes during transmission by setting `UART_RS485_CONF_REG.UART_RS485RXBY_TX_EN` to 1 and `UART_RS485_CONF_REG.UART_RS485TX_RX_EN` to 0. This setup can work in any RS485 UART mode or even in *UART_MODE_UART*.

Application Examples

The table below describes the code examples available in the directory peripherals/uart/.

Code Example	Description
peripherals/uart/uart_echo	Configuring UART settings, installing the UART driver, and reading/writing over the UART1 interface.
peripherals/uart/uart_events	Reporting various communication events, using pattern detection interrupts.
peripherals/uart/uart_async_rxtxtasks	Transmitting and receiving data in two separate FreeRTOS tasks over the same UART.
peripherals/uart/uart_select	Using synchronous I/O multiplexing for UART file descriptors.
peripherals/uart/uart_echo_rs485	Setting up UART driver to communicate over RS485 interface in half-duplex mode. This example is similar to peripherals/uart/uart_echo but allows communication through an RS485 interface chip connected to ESP32 pins.
peripherals/uart/nmea0183_parser	Obtaining GPS information by parsing NMEA0183 statements received from GPS via the UART peripheral.

API Reference

Header File

- driver/include/driver/uart.h

Functions

esp_err_t **uart_driver_install**(*uart_port_t uart_num*, int *rx_buffer_size*, int *tx_buffer_size*, int *queue_size*, *QueueHandle_t* **uart_queue*, int *intr_alloc_flags*)

Install UART driver and set the UART to the default configuration.

UART ISR handler will be attached to the same CPU core that this function is running on.

Note Rx_buffer_size should be greater than UART_FIFO_LEN. Tx_buffer_size should be either zero or greater than UART_FIFO_LEN.

Return

- ESP_OK Success
- ESP_FAIL Parameter error

Parameters

- `uart_num`: UART port number, the max port number is (UART_NUM_MAX -1).
- `rx_buffer_size`: UART RX ring buffer size.
- `tx_buffer_size`: UART TX ring buffer size. If set to zero, driver will not use TX buffer, TX function will block task until all data have been sent out.
- `queue_size`: UART event queue size/depth.
- `uart_queue`: UART event queue handle (out param). On success, a new queue handle is written here to provide access to UART events. If set to NULL, driver will not use an event queue.
- `intr_alloc_flags`: Flags used to allocate the interrupt. One or multiple (ORred) ESP_INTR_FLAG_* values. See esp_intr_alloc.h for more info. Do not set ESP_INTR_FLAG_IRAM here (the driver's ISR handler is not located in IRAM)

esp_err_t **uart_driver_delete**(*uart_port_t uart_num*)

Uninstall UART driver.

Return

- ESP_OK Success
- ESP_FAIL Parameter error

Parameters

- `uart_num`: UART port number, the max port number is (UART_NUM_MAX -1).

bool **uart_is_driver_installed**(*uart_port_t uart_num*)

Checks whether the driver is installed or not.

Return

- true driver is installed
- false driver is not installed

Parameters

- `uart_num`: UART port number, the max port number is (UART_NUM_MAX -1).

esp_err_t **uart_set_word_length**(*uart_port_t uart_num*, *uart_word_length_t data_bit*)

Set UART data bits.

Return

- ESP_OK Success
- ESP_FAIL Parameter error

Parameters

- `uart_num`: UART port number, the max port number is (UART_NUM_MAX -1).
- `data_bit`: UART data bits

esp_err_t **uart_get_word_length**(*uart_port_t uart_num*, *uart_word_length_t *data_bit*)

Get the UART data bit configuration.

Return

- ESP_FAIL Parameter error
- ESP_OK Success, result will be put in (*data_bit)

Parameters

- `uart_num`: UART port number, the max port number is (UART_NUM_MAX -1).
- `data_bit`: Pointer to accept value of UART data bits.

esp_err_t **uart_set_stop_bits**(*uart_port_t uart_num*, *uart_stop_bits_t stop_bits*)

Set UART stop bits.

Return

- ESP_OK Success
- ESP_FAIL Fail

Parameters

- `uart_num`: UART port number, the max port number is (UART_NUM_MAX -1).
- `stop_bits`: UART stop bits

esp_err_t **uart_get_stop_bits**(*uart_port_t uart_num*, *uart_stop_bits_t *stop_bits*)

Get the UART stop bit configuration.

Return

- ESP_FAIL Parameter error
- ESP_OK Success, result will be put in (*stop_bit)

Parameters

- `uart_num`: UART port number, the max port number is (UART_NUM_MAX -1).
- `stop_bits`: Pointer to accept value of UART stop bits.

esp_err_t **uart_set_parity**(*uart_port_t uart_num*, *uart_parity_t parity_mode*)

Set UART parity mode.

Return

- ESP_FAIL Parameter error
- ESP_OK Success

Parameters

- `uart_num`: UART port number, the max port number is (UART_NUM_MAX -1).
- `parity_mode`: the enum of uart parity configuration

esp_err_t **uart_get_parity**(*uart_port_t uart_num*, *uart_parity_t *parity_mode*)

Get the UART parity mode configuration.

Return

- ESP_FAIL Parameter error
- ESP_OK Success, result will be put in (*parity_mode)

Parameters

- `uart_num`: UART port number, the max port number is (UART_NUM_MAX -1).
- `parity_mode`: Pointer to accept value of UART parity mode.

esp_err_t **uart_set_baudrate**(*uart_port_t uart_num*, uint32_t *baudrate*)

Set UART baud rate.

Return

- ESP_FAIL Parameter error
- ESP_OK Success

Parameters

- `uart_num`: UART port number, the max port number is (UART_NUM_MAX -1).
- `baudrate`: UART baud rate.

esp_err_t **uart_get_baudrate**(*uart_port_t uart_num*, uint32_t *baudrate*)

Get the UART baud rate configuration.

Return

- ESP_FAIL Parameter error
- ESP_OK Success, result will be put in (*baudrate)

Parameters

- `uart_num`: UART port number, the max port number is (UART_NUM_MAX -1).
- `baudrate`: Pointer to accept value of UART baud rate

esp_err_t **uart_set_line_inverse**(*uart_port_t uart_num*, uint32_t *inverse_mask*)

Set UART line inverse mode.

Return

- ESP_OK Success
- ESP_FAIL Parameter error

Parameters

- `uart_num`: UART port number, the max port number is (UART_NUM_MAX -1).
- `inverse_mask`: Choose the wires that need to be inverted. Using the ORred mask of `uart_signal_inv_t`

esp_err_t **uart_set_hw_flow_ctrl**(*uart_port_t uart_num*, *uart_hw_flowcontrol_t flow_ctrl*, uint8_t *rx_thresh*)

Set hardware flow control.

Return

- ESP_OK Success
- ESP_FAIL Parameter error

Parameters

- `uart_num`: UART port number, the max port number is (UART_NUM_MAX -1).
- `flow_ctrl`: Hardware flow control mode
- `rx_thresh`: Threshold of Hardware RX flow control (0 ~ UART_FIFO_LEN). Only when UART_HW_FLOWCTRL_RTS is set, will the rx_thresh value be set.

esp_err_t **uart_set_sw_flow_ctrl**(*uart_port_t uart_num*, bool *enable*, uint8_t *rx_thresh_xon*, uint8_t *rx_thresh_xoff*)

Set software flow control.

Return

- ESP_OK Success
- ESP_FAIL Parameter error

Parameters

- `uart_num`: UART_NUM_0, UART_NUM_1 or UART_NUM_2
- `enable`: switch on or off

- `rx_thresh_xon`: low water mark
- `rx_thresh_xoff`: high water mark

esp_err_t **uart_get_hw_flow_ctrl** (*uart_port_t uart_num*, *uart_hw_flowcontrol_t *flow_ctrl*)

Get the UART hardware flow control configuration.

Return

- ESP_FAIL Parameter error
- ESP_OK Success, result will be put in (*flow_ctrl)

Parameters

- `uart_num`: UART port number, the max port number is (UART_NUM_MAX -1).
- `flow_ctrl`: Option for different flow control mode.

esp_err_t **uart_clear_intr_status** (*uart_port_t uart_num*, uint32_t *clr_mask*)

Clear UART interrupt status.

Return

- ESP_OK Success
- ESP_FAIL Parameter error

Parameters

- `uart_num`: UART port number, the max port number is (UART_NUM_MAX -1).
- `clr_mask`: Bit mask of the interrupt status to be cleared.

esp_err_t **uart_enable_intr_mask** (*uart_port_t uart_num*, uint32_t *enable_mask*)

Set UART interrupt enable.

Return

- ESP_OK Success
- ESP_FAIL Parameter error

Parameters

- `uart_num`: UART port number, the max port number is (UART_NUM_MAX -1).
- `enable_mask`: Bit mask of the enable bits.

esp_err_t **uart_disable_intr_mask** (*uart_port_t uart_num*, uint32_t *disable_mask*)

Clear UART interrupt enable bits.

Return

- ESP_OK Success
- ESP_FAIL Parameter error

Parameters

- `uart_num`: UART port number, the max port number is (UART_NUM_MAX -1).
- `disable_mask`: Bit mask of the disable bits.

esp_err_t **uart_enable_rx_intr** (*uart_port_t uart_num*)

Enable UART RX interrupt (RX_FULL & RX_TIMEOUT INTERRUPT)

Return

- ESP_OK Success
- ESP_FAIL Parameter error

Parameters

- `uart_num`: UART port number, the max port number is (UART_NUM_MAX -1).

esp_err_t **uart_disable_rx_intr** (*uart_port_t uart_num*)

Disable UART RX interrupt (RX_FULL & RX_TIMEOUT INTERRUPT)

Return

- ESP_OK Success
- ESP_FAIL Parameter error

Parameters

- `uart_num`: UART port number, the max port number is (UART_NUM_MAX -1).

esp_err_t **uart_disable_tx_intr** (*uart_port_t uart_num*)

Disable UART TX interrupt (TXFIFO_EMPTY INTERRUPT)

Return

- ESP_OK Success
- ESP_FAIL Parameter error

Parameters

- `uart_num`: UART port number

esp_err_t **uart_enable_tx_intr** (*uart_port_t uart_num*, int *enable*, int *thresh*)

Enable UART TX interrupt (TXFIFO_EMPTY INTERRUPT)

Return

- ESP_OK Success
- ESP_FAIL Parameter error

Parameters

- `uart_num`: UART port number, the max port number is (UART_NUM_MAX -1).
- `enable`: 1: enable; 0: disable
- `thresh`: Threshold of TX interrupt, 0 ~ UART_FIFO_LEN

esp_err_t **uart_isr_register** (*uart_port_t uart_num*, void (**fn*)) void *

, void **arg*, int *intr_alloc_flags*, *uart_isr_handle_t* **handle*Register UART interrupt handler (ISR).

Note UART ISR handler will be attached to the same CPU core that this function is running on.

Return

- ESP_OK Success
- ESP_FAIL Parameter error

Parameters

- `uart_num`: UART port number, the max port number is (UART_NUM_MAX -1).
- `fn`: Interrupt handler function.
- `arg`: parameter for handler function
- `intr_alloc_flags`: Flags used to allocate the interrupt. One or multiple (ORred) ESP_INTR_FLAG_* values. See esp_intr_alloc.h for more info.
- `handle`: Pointer to return handle. If non-NULL, a handle for the interrupt will be returned here.

esp_err_t **uart_isr_free** (*uart_port_t uart_num*)

Free UART interrupt handler registered by uart_isr_register. Must be called on the same core as uart_isr_register was called.

Return

- ESP_OK Success
- ESP_FAIL Parameter error

Parameters

- `uart_num`: UART port number, the max port number is (UART_NUM_MAX -1).

esp_err_t **uart_set_pin** (*uart_port_t uart_num*, int *tx_io_num*, int *rx_io_num*, int *rts_io_num*, int *cts_io_num*)

Set UART pin number.

Note Internal signal can be output to multiple GPIO pads. Only one GPIO pad can connect with input signal.

Note Instead of GPIO number a macro 'UART_PIN_NO_CHANGE' may be provided to keep the currently allocated pin.

Return

- ESP_OK Success
- ESP_FAIL Parameter error

Parameters

- `uart_num`: UART port number, the max port number is (UART_NUM_MAX -1).
- `tx_io_num`: UART TX pin GPIO number.
- `rx_io_num`: UART RX pin GPIO number.
- `rts_io_num`: UART RTS pin GPIO number.
- `cts_io_num`: UART CTS pin GPIO number.

esp_err_t **uart_set_rts** (*uart_port_t uart_num*, int *level*)

Manually set the UART RTS pin level.

Note UART must be configured with hardware flow control disabled.

Return

- ESP_OK Success
- ESP_FAIL Parameter error

Parameters

- `uart_num`: UART port number, the max port number is (UART_NUM_MAX -1).
- `level`: 1: RTS output low (active); 0: RTS output high (block)

esp_err_t **uart_set_dtr** (*uart_port_t uart_num*, int *level*)

Manually set the UART DTR pin level.

Return

- ESP_OK Success
- ESP_FAIL Parameter error

Parameters

- `uart_num`: UART port number, the max port number is (UART_NUM_MAX -1).
- `level`: 1: DTR output low; 0: DTR output high

esp_err_t **uart_set_tx_idle_num** (*uart_port_t uart_num*, uint16_t *idle_num*)

Set UART idle interval after tx FIFO is empty.

Return

- ESP_OK Success
- ESP_FAIL Parameter error

Parameters

- `uart_num`: UART port number, the max port number is (UART_NUM_MAX -1).
- `idle_num`: idle interval after tx FIFO is empty(unit: the time it takes to send one bit under current baudrate)

esp_err_t **uart_param_config** (*uart_port_t uart_num*, **const** *uart_config_t *uart_config*)

Set UART configuration parameters.

Return

- ESP_OK Success
- ESP_FAIL Parameter error

Parameters

- `uart_num`: UART port number, the max port number is (UART_NUM_MAX -1).
- `uart_config`: UART parameter settings

esp_err_t **uart_intr_config** (*uart_port_t uart_num*, **const** *uart_intr_config_t *intr_conf*)

Configure UART interrupts.

Return

- ESP_OK Success
- ESP_FAIL Parameter error

Parameters

- `uart_num`: UART port number, the max port number is (UART_NUM_MAX -1).
- `intr_conf`: UART interrupt settings

esp_err_t **uart_wait_tx_done** (*uart_port_t uart_num*, TickType_t *ticks_to_wait*)

Wait until UART TX FIFO is empty.

Return

- ESP_OK Success
- ESP_FAIL Parameter error
- ESP_ERR_TIMEOUT Timeout

Parameters

- `uart_num`: UART port number, the max port number is (UART_NUM_MAX -1).
- `ticks_to_wait`: Timeout, count in RTOS ticks

int **uart_tx_chars** (*uart_port_t uart_num*, **const** char *buffer, uint32_t *len*)

Send data to the UART port from a given buffer and length.

This function will not wait for enough space in TX FIFO. It will just fill the available TX FIFO and return when the FIFO is full.

Note This function should only be used when UART TX buffer is not enabled.

Return

- (-1) Parameter error
- OTHERS (>=0) The number of bytes pushed to the TX FIFO

Parameters

- `uart_num`: UART port number, the max port number is (UART_NUM_MAX -1).
- `buffer`: data buffer address
- `len`: data length to send

int **uart_write_bytes**(*uart_port_t uart_num*, **const** void **src*, size_t *size*)

Send data to the UART port from a given buffer and length,.

If the UART driver's parameter 'tx_buffer_size' is set to zero: This function will not return until all the data have been sent out, or at least pushed into TX FIFO.

Otherwise, if the 'tx_buffer_size' > 0, this function will return after copying all the data to tx ring buffer, UART ISR will then move data from the ring buffer to TX FIFO gradually.

Return

- (-1) Parameter error
- OTHERS (>=0) The number of bytes pushed to the TX FIFO

Parameters

- `uart_num`: UART port number, the max port number is (UART_NUM_MAX -1).
- `src`: data buffer address
- `size`: data length to send

int **uart_write_bytes_with_break**(*uart_port_t uart_num*, **const** void **src*, size_t *size*, int *brk_len*)

Send data to the UART port from a given buffer and length,.

If the UART driver's parameter 'tx_buffer_size' is set to zero: This function will not return until all the data and the break signal have been sent out. After all data is sent out, send a break signal.

Otherwise, if the 'tx_buffer_size' > 0, this function will return after copying all the data to tx ring buffer, UART ISR will then move data from the ring buffer to TX FIFO gradually. After all data sent out, send a break signal.

Return

- (-1) Parameter error
- OTHERS (>=0) The number of bytes pushed to the TX FIFO

Parameters

- `uart_num`: UART port number, the max port number is (UART_NUM_MAX -1).
- `src`: data buffer address
- `size`: data length to send
- `brk_len`: break signal duration(unit: the time it takes to send one bit at current baudrate)

int **uart_read_bytes**(*uart_port_t uart_num*, void **buf*, uint32_t *length*, TickType_t *ticks_to_wait*)

UART read bytes from UART buffer.

Return

- (-1) Error
- OTHERS (>=0) The number of bytes read from UART FIFO

Parameters

- `uart_num`: UART port number, the max port number is (UART_NUM_MAX -1).
- `buf`: pointer to the buffer.
- `length`: data length
- `ticks_to_wait`: sTimeout, count in RTOS ticks

esp_err_t **uart_flush**(*uart_port_t uart_num*)

Alias of uart_flush_input. UART ring buffer flush. This will discard all data in the UART RX buffer.

Note Instead of waiting the data sent out, this function will clear UART rx buffer. In order to send all the data in tx FIFO, we can use uart_wait_tx_done function.

Return

- ESP_OK Success

- ESP_FAIL Parameter error

Parameters

- `uart_num`: UART port number, the max port number is (UART_NUM_MAX -1).

esp_err_t **uart_flush_input** (*uart_port_t uart_num*)

Clear input buffer, discard all the data is in the ring-buffer.

Note In order to send all the data in tx FIFO, we can use uart_wait_tx_done function.

Return

- ESP_OK Success
- ESP_FAIL Parameter error

Parameters

- `uart_num`: UART port number, the max port number is (UART_NUM_MAX -1).

esp_err_t **uart_get_buffered_data_len** (*uart_port_t uart_num*, size_t **size*)

UART get RX ring buffer cached data length.

Return

- ESP_OK Success
- ESP_FAIL Parameter error

Parameters

- `uart_num`: UART port number, the max port number is (UART_NUM_MAX -1).
- `size`: Pointer of size_t to accept cached data length

esp_err_t **uart_disable_pattern_det_intr** (*uart_port_t uart_num*)

UART disable pattern detect function. Designed for applications like ‘AT commands’. When the hardware detects a series of one same character, the interrupt will be triggered.

Return

- ESP_OK Success
- ESP_FAIL Parameter error

Parameters

- `uart_num`: UART port number, the max port number is (UART_NUM_MAX -1).

esp_err_t **uart_enable_pattern_det_intr** (*uart_port_t uart_num*, char *pattern_chr*, uint8_t *chr_num*, int *chr_tout*, int *post_idle*, int *pre_idle*)

UART enable pattern detect function. Designed for applications like ‘AT commands’. When the hardware detect a series of one same character, the interrupt will be triggered.

Note This function only works for esp32. And this function is deprecated, please use uart_enable_pattern_det_baud_intr instead.

Return

- ESP_OK Success
- ESP_FAIL Parameter error

Parameters

- `uart_num`: UART port number.
- `pattern_chr`: character of the pattern.
- `chr_num`: number of the character, 8bit value.
- `chr_tout`: timeout of the interval between each pattern characters, 24bit value, unit is APB (80Mhz) clock cycle. When the duration is less than this value, it will not take this data as at_cmd char.
- `post_idle`: idle time after the last pattern character, 24bit value, unit is APB (80Mhz) clock cycle. When the duration is less than this value, it will not take the previous data as the last at_cmd char
- `pre_idle`: idle time before the first pattern character, 24bit value, unit is APB (80Mhz) clock cycle. When the duration is less than this value, it will not take this data as the first at_cmd char.

esp_err_t **uart_enable_pattern_det_baud_intr** (*uart_port_t uart_num*, char *pattern_chr*, uint8_t *chr_num*, int *chr_tout*, int *post_idle*, int *pre_idle*)

UART enable pattern detect function. Designed for applications like ‘AT commands’. When the hardware detect a series of one same character, the interrupt will be triggered.

Return

- ESP_OK Success
- ESP_FAIL Parameter error

Parameters

- `uart_num`: UART port number.
- `pattern_chr`: character of the pattern.
- `chr_num`: number of the character, 8bit value.
- `chr_tout`: timeout of the interval between each pattern characters, 16bit value, unit is the baud-rate cycle you configured. When the duration is more than this value, it will not take this data as at_cmd char.
- `post_idle`: idle time after the last pattern character, 16bit value, unit is the baud-rate cycle you configured. When the duration is less than this value, it will not take the previous data as the last at_cmd char
- `pre_idle`: idle time before the first pattern character, 16bit value, unit is the baud-rate cycle you configured. When the duration is less than this value, it will not take this data as the first at_cmd char.

int **uart_pattern_pop_pos**(*uart_port_t uart_num*)

Return the nearest detected pattern position in buffer. The positions of the detected pattern are saved in a queue, this function will dequeue the first pattern position and move the pointer to next pattern position.

The following APIs will modify the pattern position info: uart_flush_input, uart_read_bytes, uart_driver_delete, uart_pop_pattern_pos It is the application' s responsibility to ensure atomic access to the pattern queue and the rx data buffer when using pattern detect feature.

Note If the RX buffer is full and flow control is not enabled, the detected pattern may not be found in the rx buffer due to overflow.

Return

- (-1) No pattern found for current index or parameter error
- others the pattern position in rx buffer.

Parameters

- `uart_num`: UART port number, the max port number is (UART_NUM_MAX -1).

int **uart_pattern_get_pos**(*uart_port_t uart_num*)

Return the nearest detected pattern position in buffer. The positions of the detected pattern are saved in a queue, This function do nothing to the queue.

The following APIs will modify the pattern position info: uart_flush_input, uart_read_bytes, uart_driver_delete, uart_pop_pattern_pos It is the application' s responsibility to ensure atomic access to the pattern queue and the rx data buffer when using pattern detect feature.

Note If the RX buffer is full and flow control is not enabled, the detected pattern may not be found in the rx buffer due to overflow.

Return

- (-1) No pattern found for current index or parameter error
- others the pattern position in rx buffer.

Parameters

- `uart_num`: UART port number, the max port number is (UART_NUM_MAX -1).

esp_err_t **uart_pattern_queue_reset**(*uart_port_t uart_num*, int *queue_length*)

Allocate a new memory with the given length to save record the detected pattern position in rx buffer.

Return

- ESP_ERR_NO_MEM No enough memory
- ESP_ERR_INVALID_STATE Driver not installed
- ESP_FAIL Parameter error
- ESP_OK Success

Parameters

- `uart_num`: UART port number, the max port number is (UART_NUM_MAX -1).
- `queue_length`: Max queue length for the detected pattern. If the queue length is not large enough, some pattern positions might be lost. Set this value to the maximum number of patterns

that could be saved in data buffer at the same time.

esp_err_t **uart_set_mode**(*uart_port_t uart_num*, *uart_mode_t mode*)

UART set communication mode.

Note This function must be executed after uart_driver_install(), when the driver object is initialized.

Return

- ESP_OK Success
- ESP_ERR_INVALID_ARG Parameter error

Parameters

- `uart_num`: Uart number to configure, the max port number is (UART_NUM_MAX -1).
- `mode`: UART UART mode to set

esp_err_t **uart_set_rx_full_threshold**(*uart_port_t uart_num*, int *threshold*)

Set uart threshold value for RX fifo full.

Note If application is using higher baudrate and it is observed that bytes in hardware RX fifo are overwritten then this threshold can be reduced

Return

- ESP_OK Success
- ESP_ERR_INVALID_ARG Parameter error
- ESP_ERR_INVALID_STATE Driver is not installed

Parameters

- `uart_num`: UART_NUM_0, UART_NUM_1 or UART_NUM_2
- `threshold`: Threshold value above which RX fifo full interrupt is generated

esp_err_t **uart_set_tx_empty_threshold**(*uart_port_t uart_num*, int *threshold*)

Set uart threshold values for TX fifo empty.

Return

- ESP_OK Success
- ESP_ERR_INVALID_ARG Parameter error
- ESP_ERR_INVALID_STATE Driver is not installed

Parameters

- `uart_num`: UART_NUM_0, UART_NUM_1 or UART_NUM_2
- `threshold`: Threshold value below which TX fifo empty interrupt is generated

esp_err_t **uart_set_rx_timeout**(*uart_port_t uart_num*, **const** uint8_t *tout_thresh*)

UART set threshold timeout for TOUT feature.

Return

- ESP_OK Success
- ESP_ERR_INVALID_ARG Parameter error
- ESP_ERR_INVALID_STATE Driver is not installed

Parameters

- `uart_num`: Uart number to configure, the max port number is (UART_NUM_MAX -1).
- `tout_thresh`: This parameter defines timeout threshold in uart symbol periods. The maximum value of threshold is 126. tout_thresh = 1, defines TOUT interrupt timeout equal to transmission time of one symbol (~11 bit) on current baudrate. If the time is expired the UART_RXFIFO_TOUT_INT interrupt is triggered. If tout_thresh == 0, the TOUT feature is disabled.

esp_err_t **uart_get_collision_flag**(*uart_port_t uart_num*, bool **collision_flag*)

Returns collision detection flag for RS485 mode Function returns the collision detection flag into variable pointed by collision_flag. *collision_flag = true, if collision detected else it is equal to false. This function should be executed when actual transmission is completed (after uart_write_bytes()).

Return

- ESP_OK Success
- ESP_ERR_INVALID_ARG Parameter error

Parameters

- `uart_num`: Uart number to configure the max port number is (UART_NUM_MAX -1).
- `collision_flag`: Pointer to variable of type bool to return collision flag.

esp_err_t **uart_set_wakeup_threshold**(*uart_port_t uart_num*, int *wakeup_threshold*)

Set the number of RX pin signal edges for light sleep wakeup.

UART can be used to wake up the system from light sleep. This feature works by counting the number of positive edges on RX pin and comparing the count to the threshold. When the count exceeds the threshold, system is woken up from light sleep. This function allows setting the threshold value.

Stop bit and parity bits (if enabled) also contribute to the number of edges. For example, letter 'a' with ASCII code 97 is encoded as 0100001101 on the wire (with 8n1 configuration), start and stop bits included. This sequence has 3 positive edges (transitions from 0 to 1). Therefore, to wake up the system when 'a' is sent, set wakeup_threshold=3.

The character that triggers wakeup is not received by UART (i.e. it can not be obtained from UART FIFO). Depending on the baud rate, a few characters after that will also not be received. Note that when the chip enters and exits light sleep mode, APB frequency will be changing. To make sure that UART has correct baud rate all the time, select REF_TICK as UART clock source, by setting use_ref_tick field in *uart_config_t* to true.

Note in ESP32, the wakeup signal can only be input via IO_MUX (i.e. GPIO3 should be configured as function_1 to wake up UART0, GPIO9 should be configured as function_5 to wake up UART1), UART2 does not support light sleep wakeup feature.

Return
- ESP_OK on success
- ESP_ERR_INVALID_ARG if uart_num is incorrect or wakeup_threshold is outside of [3, 0x3ff] range.

Parameters
- `uart_num`: UART number, the max port number is (UART_NUM_MAX -1).
- `wakeup_threshold`: number of RX edges for light sleep wakeup, value is 3 .. 0x3ff.

esp_err_t **uart_get_wakeup_threshold**(*uart_port_t uart_num*, int **out_wakeup_threshold*)

Get the number of RX pin signal edges for light sleep wakeup.

See description of uart_set_wakeup_threshold for the explanation of UART wakeup feature.

Return
- ESP_OK on success
- ESP_ERR_INVALID_ARG if out_wakeup_threshold is NULL

Parameters
- `uart_num`: UART number, the max port number is (UART_NUM_MAX -1).
- `[out] out_wakeup_threshold`: output, set to the current value of wakeup threshold for the given UART.

esp_err_t **uart_wait_tx_idle_polling**(*uart_port_t uart_num*)

Wait until UART tx memory empty and the last char send ok (polling mode).

- **Return**
  - ESP_OK on success
  - ESP_ERR_INVALID_ARG Parameter error
  - ESP_FAIL Driver not installed

Parameters
- `uart_num`: UART number

esp_err_t **uart_set_loop_back**(*uart_port_t uart_num*, bool *loop_back_en*)

Configure TX signal loop back to RX module, just for the test usage.

- **Return**
  - ESP_OK on success
  - ESP_ERR_INVALID_ARG Parameter error
  - ESP_FAIL Driver not installed

Parameters
- `uart_num`: UART number
- `loop_back_en`: Set ture to enable the loop back function, else set it false.

void **uart_set_always_rx_timeout** (*uart_port_t uart_num*, bool *always_rx_timeout_en*)

Configure behavior of UART RX timeout interrupt.

When always_rx_timeout is true, timeout interrupt is triggered even if FIFO is full. This function can cause extra timeout interrupts triggered only to send the timeout event. Call this function only if you want to ensure timeout interrupt will always happen after a byte stream.

Parameters

- `uart_num`: UART number
- `always_rx_timeout_en`: Set to false enable the default behavior of timeout interrupt, set it to true to always trigger timeout interrupt.

Structures

struct uart_intr_config_t

UART interrupt configuration parameters for uart_intr_config function.

Public Members

uint32_t **intr_enable_mask**

UART interrupt enable mask, choose from UART_XXXX_INT_ENA_M under UART_INT_ENA_REG(i), connect with bit-or operator

uint8_t **rx_timeout_thresh**

UART timeout interrupt threshold (unit: time of sending one byte)

uint8_t **txfifo_empty_intr_thresh**

UART TX empty interrupt threshold.

uint8_t **rxfifo_full_thresh**

UART RX full interrupt threshold.

struct uart_event_t

Event structure used in UART event queue.

Public Members

uart_event_type_t **type**

UART event type

size_t **size**

UART data size for UART_DATA event

bool **timeout_flag**

UART data read timeout flag for UART_DATA event (no new data received during configured RX TOUT) If the event is caused by FIFO-full interrupt, then there will be no event with the timeout flag before the next byte coming.

Macros

UART_NUM_0

UART port 0

UART_NUM_1

UART port 1

UART_NUM_2

UART port 2

UART_NUM_MAX

UART port max

UART_PIN_NO_CHANGE

Constant for uart_set_pin function which indicates that UART pin should not be changed

UART_FIFO_LEN
Length of the UART HW FIFO.

UART_BITRATE_MAX
Maximum configurable bitrate.

Type Definitions

typedef *intr_handle_t* **uart_isr_handle_t**

Enumerations

enum uart_event_type_t
UART event types used in the ring buffer.

Values:

UART_DATA
UART data event

UART_BREAK
UART break event

UART_BUFFER_FULL
UART RX buffer full event

UART_FIFO_OVF
UART FIFO overflow event

UART_FRAME_ERR
UART RX frame error event

UART_PARITY_ERR
UART RX parity event

UART_DATA_BREAK
UART TX data and break event

UART_PATTERN_DET
UART pattern detected

UART_EVENT_MAX
UART event max index

Header File

- hal/include/hal/uart_types.h

Structures

struct uart_at_cmd_t
UART AT cmd char configuration parameters Note that this function may different on different chip. Please refer to the TRM at configuration.

Public Members

uint8_t **cmd_char**
UART AT cmd char

uint8_t **char_num**
AT cmd char repeat number

uint32_t **gap_tout**
gap time(in baud-rate) between AT cmd char

uint32_t **pre_idle**
the idle time(in baud-rate) between the non AT char and first AT char

uint32_t **post_idle**
the idle time(in baud-rate) between the last AT char and the none AT char

struct uart_sw_flowctrl_t
UART software flow control configuration parameters.

Public Members

uint8_t **xon_char**
Xon flow control char

uint8_t **xoff_char**
Xoff flow control char

uint8_t **xon_thrd**
If the software flow control is enabled and the data amount in rxfifo is less than xon_thrd, an xon_char will be sent

uint8_t **xoff_thrd**
If the software flow control is enabled and the data amount in rxfifo is more than xoff_thrd, an xoff_char will be sent

struct uart_config_t
UART configuration parameters for uart_param_config function.

Public Members

int **baud_rate**
UART baud rate

uart_word_length_t **data_bits**
UART byte size

uart_parity_t **parity**
UART parity mode

uart_stop_bits_t **stop_bits**
UART stop bits

uart_hw_flowcontrol_t **flow_ctrl**
UART HW flow control mode (cts/rts)

uint8_t **rx_flow_ctrl_thresh**
UART HW RTS threshold

uart_sclk_t **source_clk**
UART source clock selection

bool **use_ref_tick**
Deprecated method to select ref tick clock source, set source_clk field instead

Type Definitions

typedef int **uart_port_t**
UART port number, can be UART_NUM_0 ~ (UART_NUM_MAX -1).

Enumerations

enum uart_mode_t
UART mode selection.

Values:

UART_MODE_UART = 0x00
mode: regular UART mode

UART_MODE_RS485_HALF_DUPLEX = 0x01
mode: half duplex RS485 UART mode control by RTS pin

UART_MODE_IRDA = 0x02
mode: IRDA UART mode

UART_MODE_RS485_COLLISION_DETECT = 0x03
mode: RS485 collision detection UART mode (used for test purposes)

UART_MODE_RS485_APP_CTRL = 0x04
mode: application control RS485 UART mode (used for test purposes)

enum uart_word_length_t
UART word length constants.

Values:

UART_DATA_5_BITS = 0x0
word length: 5bits

UART_DATA_6_BITS = 0x1
word length: 6bits

UART_DATA_7_BITS = 0x2
word length: 7bits

UART_DATA_8_BITS = 0x3
word length: 8bits

UART_DATA_BITS_MAX = 0x4

enum uart_stop_bits_t
UART stop bits number.

Values:

UART_STOP_BITS_1 = 0x1
stop bit: 1bit

UART_STOP_BITS_1_5 = 0x2
stop bit: 1.5bits

UART_STOP_BITS_2 = 0x3
stop bit: 2bits

UART_STOP_BITS_MAX = 0x4

enum uart_parity_t
UART parity constants.

Values:

UART_PARITY_DISABLE = 0x0
Disable UART parity

UART_PARITY_EVEN = 0x2
Enable UART even parity

UART_PARITY_ODD = 0x3
Enable UART odd parity

enum uart_hw_flowcontrol_t
UART hardware flow control modes.

Values:

UART_HW_FLOWCTRL_DISABLE = 0x0
disable hardware flow control

UART_HW_FLOWCTRL_RTS = 0x1
enable RX hardware flow control (rts)

UART_HW_FLOWCTRL_CTS = 0x2
enable TX hardware flow control (cts)

UART_HW_FLOWCTRL_CTS_RTS = 0x3
enable hardware flow control

UART_HW_FLOWCTRL_MAX = 0x4

enum uart_signal_inv_t
UART signal bit map.

Values:

UART_SIGNAL_INV_DISABLE = 0
Disable UART signal inverse

UART_SIGNAL_IRDA_TX_INV = (0x1 « 0)
inverse the UART irda_tx signal

UART_SIGNAL_IRDA_RX_INV = (0x1 « 1)
inverse the UART irda_rx signal

UART_SIGNAL_RXD_INV = (0x1 « 2)
inverse the UART rxd signal

UART_SIGNAL_CTS_INV = (0x1 « 3)
inverse the UART cts signal

UART_SIGNAL_DSR_INV = (0x1 « 4)
inverse the UART dsr signal

UART_SIGNAL_TXD_INV = (0x1 « 5)
inverse the UART txd signal

UART_SIGNAL_RTS_INV = (0x1 « 6)
inverse the UART rts signal

UART_SIGNAL_DTR_INV = (0x1 « 7)
inverse the UART dtr signal

enum uart_sclk_t
UART source clock.

Values:

UART_SCLK_APB = 0x0
UART source clock from APB

UART_SCLK_REF_TICK = 0x3
UART source clock from REF_TICK

GPIO Lookup Macros The UART peripherals have dedicated IO_MUX pins to which they are connected directly. However, signals can also be routed to other pins using the less direct GPIO matrix. To use direct routes, you need to know which pin is a dedicated IO_MUX pin for a UART channel. GPIO Lookup Macros simplify the process of finding and assigning IO_MUX pins. You choose a macro based on either the IO_MUX pin number, or a required UART channel name, and the macro will return the matching counterpart for you. See some examples below.

注解： These macros are useful if you need very high UART baud rates (over 40 MHz), which means you will have to use IO_MUX pins only. In other cases, these macros can be ignored, and you can use the GPIO Matrix as it allows you to configure any GPIO pin for any UART function.

---

1. *UART_NUM_2_TXD_DIRECT_GPIO_NUM* returns the IO_MUX pin number of UART channel 2 TXD pin (pin 17)
2. *UART_GPIO19_DIRECT_CHANNEL* returns the UART number of GPIO 19 when connected to the UART peripheral via IO_MUX (this is UART_NUM_0)
3. *UART_CTS_GPIO19_DIRECT_CHANNEL* returns the UART number of GPIO 19 when used as the UART CTS pin via IO_MUX (this is UART_NUM_0). Similar to the above macro but specifies the pin function which is also part of the IO_MUX assignment.

Header File

- soc/esp32/include/soc/uart_channel.h

Macros

UART_GPIO1_DIRECT_CHANNEL
UART_NUM_0_TXD_DIRECT_GPIO_NUM

UART_GPIO3_DIRECT_CHANNEL

UART_NUM_0_RXD_DIRECT_GPIO_NUM

UART_GPIO19_DIRECT_CHANNEL

UART_NUM_0_CTS_DIRECT_GPIO_NUM

UART_GPIO22_DIRECT_CHANNEL

UART_NUM_0_RTS_DIRECT_GPIO_NUM

UART_TXD_GPIO1_DIRECT_CHANNEL

UART_RXD_GPIO3_DIRECT_CHANNEL

UART_CTS_GPIO19_DIRECT_CHANNEL

UART_RTS_GPIO22_DIRECT_CHANNEL

UART_GPIO10_DIRECT_CHANNEL

UART_NUM_1_TXD_DIRECT_GPIO_NUM

UART_GPIO9_DIRECT_CHANNEL

UART_NUM_1_RXD_DIRECT_GPIO_NUM

UART_GPIO6_DIRECT_CHANNEL

UART_NUM_1_CTS_DIRECT_GPIO_NUM

UART_GPIO11_DIRECT_CHANNEL

UART_NUM_1_RTS_DIRECT_GPIO_NUM

UART_TXD_GPIO10_DIRECT_CHANNEL

UART_RXD_GPIO9_DIRECT_CHANNEL

UART_CTS_GPIO6_DIRECT_CHANNEL

UART_RTS_GPIO11_DIRECT_CHANNEL

UART_GPIO17_DIRECT_CHANNEL

UART_NUM_2_TXD_DIRECT_GPIO_NUM

UART_GPIO16_DIRECT_CHANNEL

UART_NUM_2_RXD_DIRECT_GPIO_NUM

UART_GPIO8_DIRECT_CHANNEL

UART_NUM_2_CTS_DIRECT_GPIO_NUM

UART_GPIO7_DIRECT_CHANNEL

UART_NUM_2_RTS_DIRECT_GPIO_NUM

UART_TXD_GPIO17_DIRECT_CHANNEL

UART_RXD_GPIO16_DIRECT_CHANNEL

UART_CTS_GPIO8_DIRECT_CHANNEL

UART_RTS_GPIO7_DIRECT_CHANNEL

本部分的 API 示例代码存放在 ESP-IDF 示例项目的 peripherals 目录下。

2.4 应用层协议

2.4.1 mDNS 服务

概述

mDNS 是一种组播 UDP 服务，用来提供本地网络服务和主机发现。

绝大多数的操作系统默认都会安装 mDNS 服务，或者提供单独的安装包。`Mac OS` 默认会安装名为 `Bonjour` 的服务（该服务基于 mDNS），此外 Apple 还发布了适用于 Windows 系统的安装程序，可以在官方支持 找到。在 `Linux` 上，mDNS 服务由 avahi 提供，通常也会被默认安装。

mDNS 属性

- `hostname`：设备会去响应的主机名，如果没有设置，会根据设备的网络接口名定义 `hostname` 。例如，`my-esp32` 会被解析为 `my-esp32.local`。
- `default_instance`：默认实例名（即易记的设备名），例如 `Jhon's ESP32 Thing`。如果没有设置，将会使用 `hostname`。

以下为 STA 接口启动 mDNS 服务并设置 `hostname` 和 `default_instance` 的示例方法：

```
void start_mdns_service()
{
    // 初始化 mDNS 服务
    esp_err_t err = mdns_init();
    if (err) {
        printf("MDNS Init failed: %d\n", err);
        return;
    }

    // 设置 hostname
    mdns_hostname_set("my-esp32");
    // 设置默认实例
    mdns_instance_name_set("Jhon's ESP32 Thing");
}
```

mDNS 服务 mDNS 可以广播设备能够提供的网络服务的相关信息，每个服务会由以下属性构成。

- `instance_name`：实例名（即易记的服务名），例如 `Jhon's ESP32 Web Server`。如果没有定义，会使用 `default_instance`。
- `service_type`：（必需）服务类型，以下划线为前缀，这里 列出了常见的类型。
- `proto`：（必需）服务运行所依赖的协议，以下划线为前缀，例如 `_tcp` 或者 `_udp`。
- `port`：（必需）服务运行所用的端口号。
- `txt`：形如 `{var, val}` 的字符串数组，用于定义服务的属性。

添加一些服务和不同属性的示例方法：

```
void add_mdns_services()
{
    // 添加服务
    mdns_service_add(NULL, "_http", "_tcp", 80, NULL, 0);
    mdns_service_add(NULL, "_arduino", "_tcp", 3232, NULL, 0);
    mdns_service_add(NULL, "_myservice", "_udp", 1234, NULL, 0);

    // 注意: 必须先添加服务，然后才能设置其属性
    // web 服务器使用自定义的实例名
    mdns_service_instance_name_set("_http", "_tcp", "Jhon's ESP32 Web Server");

    mdns_txt_item_t serviceTxtData[3] = {
        {"board","esp32"},
        {"u","user"},
        {"p","password"}
    };
    // 设置服务的文本数据（会释放并替换当前数据）
    mdns_service_txt_set("_http", "_tcp", serviceTxtData, 3);

    // 修改服务端口号
    mdns_service_port_set("_myservice", "_udp", 4321);
}
```

mDNS 查询 mDNS 提供查询服务和解析主机 IP/IPv6 地址的方法。

服务查询的结果会作为 mdns_result_t 类型对象的链表返回。

解析主机 IP 地址的示例方法:

```
void resolve_mdns_host(const char * host_name)
{
    printf("Query A: %s.local", host_name);

    struct ip4_addr addr;
    addr.addr = 0;

    esp_err_t err = mdns_query_a(host_name, 2000,  &addr);
    if(err){
        if(err == ESP_ERR_NOT_FOUND){
            printf("Host was not found!");
            return;
        }
        printf("Query Failed");
        return;
    }

    printf(IPSTR, IP2STR(&addr));
}
```

解析本地服务的示例方法:

```
static const char * if_str[] = {"STA", "AP", "ETH", "MAX"};
static const char * ip_protocol_str[] = {"V4", "V6", "MAX"};

void mdns_print_results(mdns_result_t * results){
    mdns_result_t * r = results;
    mdns_ip_addr_t * a = NULL;
    int i = 1, t;
    while(r){
        printf("%d: Interface: %s, Type: %s\n", i++, if_str[r->tcpip_if], ip_
↪protocol_str[r->ip_protocol]);
```

(下页继续)

(续上页)

```
        if(r->instance_name){
            printf("  PTR : %s\n", r->instance_name);
        }
        if(r->hostname){
            printf("  SRV : %s.local:%u\n", r->hostname, r->port);
        }
        if(r->txt_count){
            printf("  TXT : [%u] ", r->txt_count);
            for(t=0; t<r->txt_count; t++){
                printf("%s=%s; ", r->txt[t].key, r->txt[t].value);
            }
            printf("\n");
        }
        a = r->addr;
        while(a){
            if(a->addr.type == IPADDR_TYPE_V6){
                printf("  AAAA: " IPV6STR "\n", IPV62STR(a->addr.u_addr.ip6));
            } else {
                printf("  A   : " IPSTR "\n", IP2STR(&(a->addr.u_addr.ip4)));
            }
            a = a->next;
        }
        r = r->next;
    }

}

void find_mdns_service(const char * service_name, const char * proto)
{
    ESP_LOGI(TAG, "Query PTR: %s.%s.local", service_name, proto);

    mdns_result_t * results = NULL;
    esp_err_t err = mdns_query_ptr(service_name, proto, 3000, 20,  &results);
    if(err){
        ESP_LOGE(TAG, "Query Failed");
        return;
    }
    if(!results){
        ESP_LOGW(TAG, "No results found!");
        return;
    }

    mdns_print_results(results);
    mdns_query_results_free(results);
}
```

使用上述方法的示例:

```
void my_app_some_method(){
    // 搜索 esp32-mdns.local
    resolve_mdns_host("esp32-mdns");

    // 搜索 HTTP 服务器
    find_mdns_service("_http", "_tcp");
    // 或者搜索文件服务器
    find_mdns_service("_smb", "_tcp"); // Windows 系统的共享服务
    find_mdns_service("_afpovertcp", "_tcp"); // Apple AFP 文件共享服务
    find_mdns_service("_nfs", "_tcp"); // NFS 服务器
    find_mdns_service("_ftp", "_tcp"); // FTP 服务器
    // 或者网络打印机
    find_mdns_service("_printer", "_tcp");
```

(下页继续)

(续上页)

```
    find_mdns_service("_ipp", "_tcp");
}
```

应用示例

有关 mDNS 服务器和查询器的应用示例请参考 protocols/mdns。

API 参考

Header File

- mdns/include/mdns.h

Functions

esp_err_t **mdns_init**(void)

Initialize mDNS on given interface.

Return

- ESP_OK on success
- ESP_ERR_INVALID_STATE when failed to register event handler
- ESP_ERR_NO_MEM on memory error
- ESP_FAIL when failed to start mdns task

void **mdns_free**(void)

Stop and free mDNS server.

esp_err_t **mdns_hostname_set**(**const** char **hostname*)

Set the hostname for mDNS server required if you want to advertise services.

Return

- ESP_OK success
- ESP_ERR_INVALID_ARG Parameter error
- ESP_ERR_NO_MEM memory error

Parameters

- `hostname`: Hostname to set

esp_err_t **mdns_instance_name_set**(**const** char **instance_name*)

Set the default instance name for mDNS server.

Return

- ESP_OK success
- ESP_ERR_INVALID_ARG Parameter error
- ESP_ERR_NO_MEM memory error

Parameters

- `instance_name`: Instance name to set

esp_err_t **mdns_service_add**(**const** char **instance_name*, **const** char **service_type*, **const** char **proto*, uint16_t *port*, *mdns_txt_item_t* *txt*[], size_t *num_items*)

Add service to mDNS server.

Return

- ESP_OK success
- ESP_ERR_INVALID_ARG Parameter error
- ESP_ERR_NO_MEM memory error
- ESP_FAIL failed to add service

Parameters

- `instance_name`: instance name to set. If NULL, global instance name or hostname will be used
- `service_type`: service type (_http, _ftp, etc)
- `proto`: service protocol (_tcp, _udp)

- `port`: service port
- `txt`: string array of TXT data (eg. {{ "var" ," val" },{ "other" ," 2" }})
- `num_items`: number of items in TXT data

esp_err_t **mdns_service_remove**(**const** char **service_type*, **const** char **proto*)

Remove service from mDNS server.

Return

- ESP_OK success
- ESP_ERR_INVALID_ARG Parameter error
- ESP_ERR_NOT_FOUND Service not found
- ESP_ERR_NO_MEM memory error

Parameters

- `service_type`: service type (_http, _ftp, etc)
- `proto`: service protocol (_tcp, _udp)

esp_err_t **mdns_service_instance_name_set**(**const** char **service_type*, **const** char **proto*, **const** char **instance_name*)

Set instance name for service.

Return

- ESP_OK success
- ESP_ERR_INVALID_ARG Parameter error
- ESP_ERR_NOT_FOUND Service not found
- ESP_ERR_NO_MEM memory error

Parameters

- `service_type`: service type (_http, _ftp, etc)
- `proto`: service protocol (_tcp, _udp)
- `instance_name`: instance name to set

esp_err_t **mdns_service_port_set**(**const** char **service_type*, **const** char **proto*, uint16_t *port*)

Set service port.

Return

- ESP_OK success
- ESP_ERR_INVALID_ARG Parameter error
- ESP_ERR_NOT_FOUND Service not found
- ESP_ERR_NO_MEM memory error

Parameters

- `service_type`: service type (_http, _ftp, etc)
- `proto`: service protocol (_tcp, _udp)
- `port`: service port

esp_err_t **mdns_service_txt_set**(**const** char **service_type*, **const** char **proto*, *mdns_txt_item_t* *txt*[], uint8_t *num_items*)

Replace all TXT items for service.

Return

- ESP_OK success
- ESP_ERR_INVALID_ARG Parameter error
- ESP_ERR_NOT_FOUND Service not found
- ESP_ERR_NO_MEM memory error

Parameters

- `service_type`: service type (_http, _ftp, etc)
- `proto`: service protocol (_tcp, _udp)
- `txt`: array of TXT data (eg. {{ "var" ," val" },{ "other" ," 2" }})
- `num_items`: number of items in TXT data

esp_err_t **mdns_service_txt_item_set**(**const** char **service_type*, **const** char **proto*, **const** char **key*, **const** char **value*)

Set/Add TXT item for service TXT record.

Return

- ESP_OK success

- ESP_ERR_INVALID_ARG Parameter error
- ESP_ERR_NOT_FOUND Service not found
- ESP_ERR_NO_MEM memory error

Parameters

- `service_type`: service type (_http, _ftp, etc)
- `proto`: service protocol (_tcp, _udp)
- `key`: the key that you want to add/update
- `value`: the new value of the key

esp_err_t **mdns_service_txt_item_remove**(**const** char **service_type*, **const** char **proto*, **const** char **key*)

Remove TXT item for service TXT record.

Return

- ESP_OK success
- ESP_ERR_INVALID_ARG Parameter error
- ESP_ERR_NOT_FOUND Service not found
- ESP_ERR_NO_MEM memory error

Parameters

- `service_type`: service type (_http, _ftp, etc)
- `proto`: service protocol (_tcp, _udp)
- `key`: the key that you want to remove

esp_err_t **mdns_service_remove_all**(void)

Remove and free all services from mDNS server.

Return

- ESP_OK success
- ESP_ERR_INVALID_ARG Parameter error

esp_err_t **mdns_query**(**const** char **name*, **const** char **service_type*, **const** char **proto*, uint16_t *type*, uint32_t *timeout*, size_t *max_results*, *mdns_result_t* ***results*)

Query mDNS for host or service All following query methods are derived from this one.

Return

- ESP_OK success
- ESP_ERR_INVALID_STATE mDNS is not running
- ESP_ERR_NO_MEM memory error
- ESP_ERR_INVALID_ARG timeout was not given

Parameters

- `name`: service instance or host name (NULL for PTR queries)
- `service_type`: service type (_http, _arduino, _ftp etc.) (NULL for host queries)
- `proto`: service protocol (_tcp, _udp, etc.) (NULL for host queries)
- `type`: type of query (MDNS_TYPE_*)
- `timeout`: time in milliseconds to wait for answers.
- `max_results`: maximum results to be collected
- `results`: pointer to the results of the query results must be freed using mdns_query_results_free below

void **mdns_query_results_free**(*mdns_result_t* **results*)

Free query results.

Parameters

- `results`: linked list of results to be freed

esp_err_t **mdns_query_ptr**(**const** char **service_type*, **const** char **proto*, uint32_t *timeout*, size_t *max_results*, *mdns_result_t* ***results*)

Query mDNS for service.

Return

- ESP_OK success
- ESP_ERR_INVALID_STATE mDNS is not running
- ESP_ERR_NO_MEM memory error
- ESP_ERR_INVALID_ARG parameter error

Parameters

- `service_type`: service type (_http, _arduino, _ftp etc.)
- `proto`: service protocol (_tcp, _udp, etc.)
- `timeout`: time in milliseconds to wait for answer.
- `max_results`: maximum results to be collected
- `results`: pointer to the results of the query

esp_err_t **mdns_query_srv**(**const** char **instance_name*, **const** char **service_type*, **const** char **proto*, uint32_t *timeout*, *mdns_result_t* ***result*)

Query mDNS for SRV record.

Return

- ESP_OK success
- ESP_ERR_INVALID_STATE mDNS is not running
- ESP_ERR_NO_MEM memory error
- ESP_ERR_INVALID_ARG parameter error

Parameters

- `instance_name`: service instance name
- `service_type`: service type (_http, _arduino, _ftp etc.)
- `proto`: service protocol (_tcp, _udp, etc.)
- `timeout`: time in milliseconds to wait for answer.
- `result`: pointer to the result of the query

esp_err_t **mdns_query_txt**(**const** char **instance_name*, **const** char **service_type*, **const** char **proto*, uint32_t *timeout*, *mdns_result_t* ***result*)

Query mDNS for TXT record.

Return

- ESP_OK success
- ESP_ERR_INVALID_STATE mDNS is not running
- ESP_ERR_NO_MEM memory error
- ESP_ERR_INVALID_ARG parameter error

Parameters

- `instance_name`: service instance name
- `service_type`: service type (_http, _arduino, _ftp etc.)
- `proto`: service protocol (_tcp, _udp, etc.)
- `timeout`: time in milliseconds to wait for answer.
- `result`: pointer to the result of the query

esp_err_t **mdns_query_a**(**const** char **host_name*, uint32_t *timeout*, esp_ip4_addr_t **addr*)

Query mDNS for A record.

Return

- ESP_OK success
- ESP_ERR_INVALID_STATE mDNS is not running
- ESP_ERR_NO_MEM memory error
- ESP_ERR_INVALID_ARG parameter error

Parameters

- `host_name`: host name to look for
- `timeout`: time in milliseconds to wait for answer.
- `addr`: pointer to the resulting IP4 address

esp_err_t **mdns_query_aaaa**(**const** char **host_name*, uint32_t *timeout*, esp_ip6_addr_t **addr*)

Query mDNS for A record.

Return

- ESP_OK success
- ESP_ERR_INVALID_STATE mDNS is not running
- ESP_ERR_NO_MEM memory error
- ESP_ERR_INVALID_ARG parameter error

Parameters

- `host_name`: host name to look for

- `timeout`: time in milliseconds to wait for answer. If 0, max_results needs to be defined
- `addr`: pointer to the resulting IP6 address

esp_err_t **mdns_handle_system_event** (void *ctx, *system_event_t* *event)

System event handler This method controls the service state on all active interfaces and applications are required to call it from the system event handler for normal operation of mDNS service.

Parameters

- `ctx`: The system event context
- `event`: The system event

Structures

struct mdns_txt_item_t

mDNS basic text item structure Used in mdns_service_add()

Public Members

const char ***key**

item key name

const char ***value**

item value string

struct mdns_ip_addr_s

mDNS query linked list IP item

Public Members

esp_ip_addr_t **addr**

IP address

struct *mdns_ip_addr_s* ***next**

next IP, or NULL for the last IP in the list

struct mdns_result_s

mDNS query result structure

Public Members

struct *mdns_result_s* ***next**

next result, or NULL for the last result in the list

mdns_if_t **tcpip_if**

interface index

mdns_ip_protocol_t **ip_protocol**

ip_protocol type of the interface (v4/v6)

char ***instance_name**

instance name

char ***hostname**

hostname

uint16_t **port**

service port

mdns_txt_item_t ***txt**

txt record

size_t **txt_count**

number of txt items

mdns_ip_addr_t ***addr**
linked list of IP addresses found

Macros

MDNS_TYPE_A
MDNS_TYPE_PTR
MDNS_TYPE_TXT
MDNS_TYPE_AAAA
MDNS_TYPE_SRV
MDNS_TYPE_OPT
MDNS_TYPE_NSEC
MDNS_TYPE_ANY

Type Definitions

typedef struct *mdns_ip_addr_s* **mdns_ip_addr_t**
mDNS query linked list IP item

typedef enum *mdns_if_internal* **mdns_if_t**

typedef struct *mdns_result_s* **mdns_result_t**
mDNS query result structure

Enumerations

enum mdns_ip_protocol_t
mDNS enum to specify the ip_protocol type

Values:

MDNS_IP_PROTOCOL_V4

MDNS_IP_PROTOCOL_V6

MDNS_IP_PROTOCOL_MAX

enum mdns_if_internal
Values:

MDNS_IF_STA = 0

MDNS_IF_AP = 1

MDNS_IF_ETH = 2

MDNS_IF_MAX

2.4.2 ESP-TLS

Overview

The ESP-TLS component provides a simplified API interface for accessing the commonly used TLS functionality. It supports common scenarios like CA certification validation, SNI, ALPN negotiation, non-blocking connection among others. All the configuration can be specified in the `esp_tls_cfg_t` data structure. Once done, TLS communication can be conducted using the following APIs:

- *`esp_tls_conn_new()`*: for opening a new TLS connection.
- *`esp_tls_conn_read()`*: for reading from the connection.
- *`esp_tls_conn_write()`*: for writing into the connection.
- *`esp_tls_conn_delete()`*: for freeing up the connection.

Any application layer protocol like HTTP1, HTTP2 etc can be executed on top of this layer.

Application Example

Simple HTTPS example that uses ESP-TLS to establish a secure socket connection: protocols/https_request.

Tree structure for ESP-TLS component

```
├── esp_tls.c
├── esp_tls.h
├── esp_tls_mbedtls.c
├── esp_tls_wolfssl.c
└── private_include
    ├── esp_tls_mbedtls.h
    └── esp_tls_wolfssl.h
```

The ESP-TLS component has a file esp-tls/esp_tls.h which contain the public API headers for the component. Internally ESP-TLS component uses one of the two SSL/TLS Libraries between mbedtls and wolfssl for its operation. API specific to mbedtls are present in esp-tls/private_include/esp_tls_mbedtls.h and API specific to wolfssl are present in esp-tls/private_include/esp_tls_wolfssl.h.

TLS Server verification

The ESP-TLS provides multiple options for TLS server verification on the client side. The ESP-TLS client can verify the server by validating the peer's server certificate or with the help of pre-shared keys. The user should select only one of the following options in the `esp_tls_cfg_t` structure for TLS server verification. If no option is selected then client will return a fatal error by default at the time of the TLS connection setup.

- **cacert_buf** and **cacert_bytes**: The CA certificate can be provided in a buffer to the `esp_tls_cfg_t` structure. The ESP-TLS will use the CA certificate present in the buffer to verify the server. The following variables in `esp_tls_cfg_t` structure must be set.
  - `cacert_buf` - pointer to the buffer which contains the CA cert.
  - `cacert_bytes` - size of the CA certificate in bytes.
- **use_global_ca_store**: The `global_ca_store` can be initialized and set at once. Then it can be used to verify the server for all the ESP-TLS connections which have set `use_global_ca_store = true` in their respective `esp_tls_cfg_t` structure. See API Reference section below on information regarding different API used for initializing and setting up the `global_ca_store`.
- **crt_bundle_attach**: The ESP x509 Certificate Bundle API provides an easy way to include a bundle of custom x509 root certificates for TLS server verification. More details can be found at *ESP x509 Certificate Bundle*
- **psk_hint_key**: To use pre-shared keys for server verification, *CONFIG_ESP_TLS_PSK_VERIFICATION* should be enabled in the ESP-TLS menuconfig. Then the pointer to PSK hint and key should be provided to the `esp_tls_cfg_t` structure. The ESP-TLS will use the PSK for server verification only when no other option regarding the server verification is selected.
- **skip server verification**: This is an insecure option provided in the ESP-TLS for testing purpose. The option can be set by enabling *CONFIG_ESP_TLS_INSECURE* and *CONFIG_ESP_TLS_SKIP_SERVER_CERT_VERIFY* in the ESP-TLS menuconfig. When this option is enabled the ESP-TLS will skip server verification by default when no other options for server verification are selected in the `esp_tls_cfg_t` structure. *WARNING:Enabling this option comes with a potential risk of establishing a TLS connection with a server which has a fake identity, provided that the server certificate is not provided either through API or other mechanism like ca_store etc.*

Underlying SSL/TLS Library Options

The ESP-TLS component has an option to use mbedtls or wolfssl as their underlying SSL/TLS library. By default only mbedtls is available and is used, wolfssl SSL/TLS library is available publicly at https://github.com/espressif/esp-wolfssl. The repository provides wolfssl component in binary format, it also provides few examples which are useful for understanding the API. Please refer the repository README.md for information on licensing and other options. Please see below option for using wolfssl in your project.

注解： *As the library options are internal to ESP-TLS, switching the libries will not change ESP-TLS specific code for a project.*

How to use wolfssl with ESP-IDF

There are two ways to use wolfssl in your project

1) Directly add wolfssl as a component in your project with following three commands.:

```
(First change directory (cd) to your project directory)
mkdir components
cd components
git clone https://github.com/espressif/esp-wolfssl.git
```

2) Add wolfssl as an extra component in your project.

- Download wolfssl with:

```
git clone https://github.com/espressif/esp-wolfssl.git
```

- Include esp-wolfssl in ESP-IDF with setting EXTRA_COMPONENT_DIRS in CMakeLists.txt/Makefile of your project as done in wolfssl/examples. For reference see Optional Project variables in *build-system.*

After above steps, you will have option to choose wolfssl as underlying SSL/TLS library in configuration menu of your project as follows:

```
idf.py/make menuconfig -> ESP-TLS -> choose SSL/TLS Library -> mbedtls/wolfssl
```

Comparison between mbedtls and wolfssl

The following table shows a typical comparison between wolfssl and mbedtls when protocols/https_request example *(which has server authentication)* was run with both SSL/TLS libraries and with all respective configurations set to default. *(mbedtls IN_CONTENT length and OUT_CONTENT length were set to 16384 bytes and 4096 bytes respectively)*

Property	Wolfssl	Mbedtls
Total Heap Consumed	~19 Kb	~37 Kb
Task Stack Used	~2.2 Kb	~3.6 Kb
Bin size	~858 Kb	~736 Kb

注解： *These values are subject to change with change in configuration options and version of respective libraries.*

ATECC608A (Secure Element) with ESP-TLS

ESP-TLS provides support for using ATECC608A cryptoauth chip with ESP32-WROOM-32SE. Use of ATECC608A is supported only when ESP-TLS is used with mbedTLS as its underlying SSL/TLS stack. ESP-TLS uses mbedtls as its underlying TLS/SSL stack by default unless changed manually.

注解： ATECC608A chip on ESP32-WROOM-32SE must be already configured and provisioned, for details refer esp_cryptoauth_utility

To enable the secure element support, and use it in you project for TLS connection, you will have to follow below steps

1) Add esp-cryptoauthlib in your project, for details please refer esp-cryptoauthlib with ESP_IDF
2) Enable following menuconfig option:

```
menuconfig->Component config->ESP-TLS->Use Secure Element (ATECC608A) with ESP-TLS
```

3) Select type of ATECC608A chip with following option:

```
menuconfig->Component config->esp-cryptoauthlib->Choose Type of ATECC608A chip
```

to know more about different types of ATECC608A chips and how to obtain type of ATECC608A connected to your ESP module please visit ATECC608A chip type

4) Enable use of ATECC608A in ESP-TLS by providing following config option in *esp_tls_cfg_t*

```
esp_tls_cfg_t cfg = {
    /* other configurations options */
    .use_secure_element = true,
};
```

API Reference

Header File

- esp-tls/esp_tls.h

Functions

esp_tls_t ***esp_tls_init**(void)

Create TLS connection.

This function allocates and initializes esp-tls structure handle.

Return tls Pointer to esp-tls as esp-tls handle if successfully initialized, NULL if allocation error

esp_tls_t ***esp_tls_conn_new**(**const** char **hostname*, int *hostlen*, int *port*, **const** *esp_tls_cfg_t* **cfg*)

Create a new blocking TLS/SSL connection.

This function establishes a TLS/SSL connection with the specified host in blocking manner.

Note: This API is present for backward compatibility reasons. Alternative function with the same functionality is `esp_tls_conn_new_sync` (and its asynchronous version `esp_tls_conn_new_async`)

Return pointer to esp_tls_t, or NULL if connection couldn't be opened.

Parameters

- `[in] hostname`: Hostname of the host.
- `[in] hostlen`: Length of hostname.
- `[in] port`: Port number of the host.
- `[in] cfg`: TLS configuration as esp_tls_cfg_t. If you wish to open non-TLS connection, keep this NULL. For TLS connection, a pass pointer to esp_tls_cfg_t. At a minimum, this structure should be zero-initialized.

int **esp_tls_conn_new_sync**(**const** char **hostname*, int *hostlen*, int *port*, **const** *esp_tls_cfg_t* **cfg*, *esp_tls_t* **tls*)

Create a new blocking TLS/SSL connection.

This function establishes a TLS/SSL connection with the specified host in blocking manner.

Return

- -1 If connection establishment fails.
- 1 If connection establishment is successful.
- 0 If connection state is in progress.

Parameters

- `[in] hostname`: Hostname of the host.
- `[in] hostlen`: Length of hostname.

- `[in] port`: Port number of the host.
- `[in] cfg`: TLS configuration as esp_tls_cfg_t. If you wish to open non-TLS connection, keep this NULL. For TLS connection, a pass pointer to esp_tls_cfg_t. At a minimum, this structure should be zero-initialized.
- `[in] tls`: Pointer to esp-tls as esp-tls handle.

esp_tls_t ***esp_tls_conn_http_new**(**const** char **url*, **const** *esp_tls_cfg_t* **cfg*)

Create a new blocking TLS/SSL connection with a given "HTTP" url.

The behaviour is same as esp_tls_conn_new() API. However this API accepts host's url.

Return pointer to esp_tls_t, or NULL if connection couldn't be opened.

Parameters

- `[in] url`: url of host.
- `[in] cfg`: TLS configuration as esp_tls_cfg_t. If you wish to open non-TLS connection, keep this NULL. For TLS connection, a pass pointer to 'esp_tls_cfg_t'. At a minimum, this structure should be zero-initialized.

int **esp_tls_conn_new_async**(**const** char **hostname*, int *hostlen*, int *port*, **const** *esp_tls_cfg_t* **cfg*, *esp_tls_t* **tls*)

Create a new non-blocking TLS/SSL connection.

This function initiates a non-blocking TLS/SSL connection with the specified host, but due to its non-blocking nature, it doesn't wait for the connection to get established.

Return

- -1 If connection establishment fails.
- 0 If connection establishment is in progress.
- 1 If connection establishment is successful.

Parameters

- `[in] hostname`: Hostname of the host.
- `[in] hostlen`: Length of hostname.
- `[in] port`: Port number of the host.
- `[in] cfg`: TLS configuration as esp_tls_cfg_t. `non_block` member of this structure should be set to be true.
- `[in] tls`: pointer to esp-tls as esp-tls handle.

int **esp_tls_conn_http_new_async**(**const** char **url*, **const** *esp_tls_cfg_t* **cfg*, *esp_tls_t* **tls*)

Create a new non-blocking TLS/SSL connection with a given "HTTP" url.

The behaviour is same as esp_tls_conn_new() API. However this API accepts host's url.

Return

- -1 If connection establishment fails.
- 0 If connection establishment is in progress.
- 1 If connection establishment is successful.

Parameters

- `[in] url`: url of host.
- `[in] cfg`: TLS configuration as esp_tls_cfg_t.
- `[in] tls`: pointer to esp-tls as esp-tls handle.

static ssize_t **esp_tls_conn_write**(*esp_tls_t* **tls*, **const** void **data*, size_t *datalen*)

Write from buffer 'data' into specified tls connection.

Return

- >=0 if write operation was successful, the return value is the number of bytes actually written to the TLS/SSL connection.
- <0 if write operation was not successful, because either an error occured or an action must be taken by the calling process.
- ESP_TLS_ERR_SSL_WANT_READ/ ESP_TLS_ERR_SSL_WANT_WRITE. if the handshake is incomplete and waiting for data to be available for reading. In this case this functions needs to be called again when the underlying transport is ready for operation.

Parameters

- `[in] tls`: pointer to esp-tls as esp-tls handle.

- `[in] data`: Buffer from which data will be written.
- `[in] datalen`: Length of data buffer.

static ssize_t **esp_tls_conn_read**(*esp_tls_t* *tls, void *data, size_t datalen)

Read from specified tls connection into the buffer ‘data’.

Return

- >0 if read operation was successful, the return value is the number of bytes actually read from the TLS/SSL connection.
- 0 if read operation was not successful. The underlying connection was closed.
- <0 if read operation was not successful, because either an error occured or an action must be taken by the calling process.

Parameters

- `[in] tls`: pointer to esp-tls as esp-tls handle.
- `[in] data`: Buffer to hold read data.
- `[in] datalen`: Length of data buffer.

void **esp_tls_conn_delete**(*esp_tls_t* *tls)

Compatible version of esp_tls_conn_destroy() to close the TLS/SSL connection.

Note This API will be removed in IDFv5.0

Parameters

- `[in] tls`: pointer to esp-tls as esp-tls handle.

int **esp_tls_conn_destroy**(*esp_tls_t* *tls)

Close the TLS/SSL connection and free any allocated resources.

This function should be called to close each tls connection opened with esp_tls_conn_new() or esp_tls_conn_http_new() APIs.

Return - 0 on success

- -1 if socket error or an invalid argument

Parameters

- `[in] tls`: pointer to esp-tls as esp-tls handle.

ssize_t **esp_tls_get_bytes_avail**(*esp_tls_t* *tls)

Return the number of application data bytes remaining to be read from the current record.

This API is a wrapper over mbedtls’s mbedtls_ssl_get_bytes_avail() API.

Return

- -1 in case of invalid arg
- bytes available in the application data record read buffer

Parameters

- `[in] tls`: pointer to esp-tls as esp-tls handle.

esp_err_t **esp_tls_get_conn_sockfd**(*esp_tls_t* *tls, int *sockfd)

Returns the connection socket file descriptor from *esp_tls* session.

Return - ESP_OK on success and value of sockfd will be updated with socket file descriptor for connection

- ESP_ERR_INVALID_ARG if (tls == NULL || sockfd == NULL)

Parameters

- `[in] tls`: handle to *esp_tls* context
- `[out] sockfd`: int pointer to sockfd value.

esp_err_t **esp_tls_init_global_ca_store**(void)

Create a global CA store, initially empty.

This function should be called if the application wants to use the same CA store for multiple connections. This function initialises the global CA store which can be then set by calling esp_tls_set_global_ca_store(). To be effective, this function must be called before any call to esp_tls_set_global_ca_store().

Return

- ESP_OK if creating global CA store was successful.
- ESP_ERR_NO_MEM if an error occured when allocating the mbedTLS resources.

esp_err_t **esp_tls_set_global_ca_store**(**const** unsigned char **cacert_pem_buf*, **const** unsigned int *cacert_pem_bytes*)

Set the global CA store with the buffer provided in pem format.

This function should be called if the application wants to set the global CA store for multiple connections i.e. to add the certificates in the provided buffer to the certificate chain. This function implicitly calls esp_tls_init_global_ca_store() if it has not already been called. The application must call this function before calling esp_tls_conn_new().

Return

- ESP_OK if adding certificates was successful.
- Other if an error occured or an action must be taken by the calling process.

Parameters

- `[in] cacert_pem_buf`: Buffer which has certificates in pem format. This buffer is used for creating a global CA store, which can be used by other tls connections.
- `[in] cacert_pem_bytes`: Length of the buffer.

void **esp_tls_free_global_ca_store**(void)

Free the global CA store currently being used.

The memory being used by the global CA store to store all the parsed certificates is freed up. The application can call this API if it no longer needs the global CA store.

esp_err_t **esp_tls_get_and_clear_last_error**(*esp_tls_error_handle_t h*, int **esp_tls_code*, int **esp_tls_flags*)

Returns last error in *esp_tls* with detailed mbedtls related error codes. The error information is cleared internally upon return.

Return

- ESP_ERR_INVALID_STATE if invalid parameters
- ESP_OK (0) if no error occurred
- specific error code (based on ESP_ERR_ESP_TLS_BASE) otherwise

Parameters

- `[in] h`: esp-tls error handle.
- `[out] esp_tls_code`: last error code returned from mbedtls api (set to zero if none) This pointer could be NULL if caller does not care about esp_tls_code
- `[out] esp_tls_flags`: last certification verification flags (set to zero if none) This pointer could be NULL if caller does not care about esp_tls_code

esp_err_t **esp_tls_get_and_clear_error_type**(*esp_tls_error_handle_t h*, *esp_tls_error_type_t err_type*, int **error_code*)

Returns the last error captured in *esp_tls* of a specific type The error information is cleared internally upon return.

Return

- ESP_ERR_INVALID_STATE if invalid parameters
- ESP_OK if a valid error returned and was cleared

Parameters

- `[in] h`: esp-tls error handle.
- `[in] err_type`: specific error type
- `[out] error_code`: last error code returned from mbedtls api (set to zero if none) This pointer could be NULL if caller does not care about esp_tls_code

mbedtls_x509_crt ***esp_tls_get_global_ca_store**(void)

Get the pointer to the global CA store currently being used.

The application must first call esp_tls_set_global_ca_store(). Then the same CA store could be used by the application for APIs other than *esp_tls*.

Note Modifying the pointer might cause a failure in verifying the certificates.

Return

- Pointer to the global CA store currently being used if successful.
- NULL if there is no global CA store set.

Structures

struct esp_tls_last_error

Error structure containing relevant errors in case tls error occurred.

Public Members

esp_err_t **last_error**

error code (based on ESP_ERR_ESP_TLS_BASE) of the last occurred error

int **esp_tls_error_code**

esp_tls error code from last *esp_tls* failed api

int **esp_tls_flags**

last certification verification flags

struct psk_key_hint

ESP-TLS preshared key and hint structure.

Public Members

const uint8_t ***key**

key in PSK authentication mode in binary format

const size_t **key_size**

length of the key

const char ***hint**

hint in PSK authentication mode in string format

struct tls_keep_alive_cfg

Keep alive parameters structure.

Public Members

bool **keep_alive_enable**

Enable keep-alive timeout

int **keep_alive_idle**

Keep-alive idle time (second)

int **keep_alive_interval**

Keep-alive interval time (second)

int **keep_alive_count**

Keep-alive packet retry send count

struct esp_tls_cfg

ESP-TLS configuration parameters.

Note Note about format of certificates:

- This structure includes certificates of a Certificate Authority, of client or server as well as private keys, which may be of PEM or DER format. In case of PEM format, the buffer must be NULL terminated (with NULL character included in certificate size).
- Certificate Authority' s certificate may be a chain of certificates in case of PEM format, but could be only one certificate in case of DER format
- Variables names of certificates and private key buffers and sizes are defined as unions providing backward compatibility for legacy *_pem_buf and *_pem_bytes names which suggested only PEM format was supported. It is encouraged to use generic names such as cacert_buf and cacert_bytes.

Public Members

const char ****alpn_protos**
Application protocols required for HTTP2. If HTTP2/ALPN support is required, a list of protocols that should be negotiated. The format is length followed by protocol name. For the most common cases the following is ok: const char **alpn_protos = { “h2”, NULL };

- where ‘h2’ is the protocol name

const unsigned char ***cacert_buf**
Certificate Authority’s certificate in a buffer. Format may be PEM or DER, depending on mbedtls-support This buffer should be NULL terminated in case of PEM

const unsigned char ***cacert_pem_buf**
CA certificate buffer legacy name

unsigned int **cacert_bytes**
Size of Certificate Authority certificate pointed to by cacert_buf (including NULL-terminator in case of PEM format)

unsigned int **cacert_pem_bytes**
Size of Certificate Authority certificate legacy name

const unsigned char ***clientcert_buf**
Client certificate in a buffer Format may be PEM or DER, depending on mbedtls-support This buffer should be NULL terminated in case of PEM

const unsigned char ***clientcert_pem_buf**
Client certificate legacy name

unsigned int **clientcert_bytes**
Size of client certificate pointed to by clientcert_pem_buf (including NULL-terminator in case of PEM format)

unsigned int **clientcert_pem_bytes**
Size of client certificate legacy name

const unsigned char ***clientkey_buf**
Client key in a buffer Format may be PEM or DER, depending on mbedtls-support This buffer should be NULL terminated in case of PEM

const unsigned char ***clientkey_pem_buf**
Client key legacy name

unsigned int **clientkey_bytes**
Size of client key pointed to by clientkey_pem_buf (including NULL-terminator in case of PEM format)

unsigned int **clientkey_pem_bytes**
Size of client key legacy name

const unsigned char ***clientkey_password**
Client key decryption password string

unsigned int **clientkey_password_len**
String length of the password pointed to by clientkey_password

bool **non_block**
Configure non-blocking mode. If set to true the underneath socket will be configured in non blocking mode after tls session is established

bool **use_secure_element**
Enable this option to use secure element or atecc608a chip (Integrated with ESP32-WROOM-32SE)

int **timeout_ms**
Network timeout in milliseconds

bool **use_global_ca_store**
: Use a global ca_store for all the connections in which this bool is set.

const char ***common_name**
: If non-NULL, server certificate CN must match this name. If NULL, server certificate CN must match hostname.

bool **skip_common_name**
: Skip any validation of server certificate CN field

tls_keep_alive_cfg_t ***keep_alive_cfg**
: Enable TCP keep-alive timeout for SSL connection

const *psk_hint_key_t* ***psk_hint_key**
: Pointer to PSK hint and key. if not NULL (and certificates are NULL) then PSK authentication is enabled with configured setup. Important note: the pointer must be valid for connection

esp_err_t (***crt_bundle_attach**) (void *conf)
: Function pointer to esp_crt_bundle_attach. Enables the use of certification bundle for server verification, must be enabled in menuconfig

void ***ds_data**
: Pointer for digital signature peripheral context

struct esp_tls
: ESP-TLS Connection Handle.

Public Members

mbedtls_ssl_context **ssl**
: TLS/SSL context

mbedtls_entropy_context **entropy**
: mbedTLS entropy context structure

mbedtls_ctr_drbg_context **ctr_drbg**
: mbedTLS ctr drbg context structure. CTR_DRBG is deterministic random bit generation based on AES-256

mbedtls_ssl_config **conf**
: TLS/SSL configuration to be shared between mbedtls_ssl_context structures

mbedtls_net_context **server_fd**
: mbedTLS wrapper type for sockets

mbedtls_x509_crt **cacert**
: Container for the X.509 CA certificate

mbedtls_x509_crt ***cacert_ptr**
: Pointer to the cacert being used.

mbedtls_x509_crt **clientcert**
: Container for the X.509 client certificate

mbedtls_pk_context **clientkey**
: Container for the private key of the client certificate

int **sockfd**
: Underlying socket file descriptor.

ssize_t (***read**) (**struct** *esp_tls* *tls, char *data, size_t datalen)
: Callback function for reading data from TLS/SSL connection.

ssize_t (***write**) (**struct** *esp_tls* *tls, **const** char *data, size_t datalen)
: Callback function for writing data to TLS/SSL connection.

esp_tls_conn_state_t **conn_state**
ESP-TLS Connection state

fd_set **rset**
read file descriptors

fd_set **wset**
write file descriptors

bool **is_tls**
indicates connection type (TLS or NON-TLS)

esp_tls_role_t **role**
esp-tls role

- ESP_TLS_CLIENT
- ESP_TLS_SERVER

esp_tls_error_handle_t **error_handle**
handle to error descriptor

Macros

ESP_ERR_ESP_TLS_BASE
Starting number of ESP-TLS error codes

ESP_ERR_ESP_TLS_CANNOT_RESOLVE_HOSTNAME
Error if hostname couldn't be resolved upon tls connection

ESP_ERR_ESP_TLS_CANNOT_CREATE_SOCKET
Failed to create socket

ESP_ERR_ESP_TLS_UNSUPPORTED_PROTOCOL_FAMILY
Unsupported protocol family

ESP_ERR_ESP_TLS_FAILED_CONNECT_TO_HOST
Failed to connect to host

ESP_ERR_ESP_TLS_SOCKET_SETOPT_FAILED
failed to set socket option

ESP_ERR_MBEDTLS_CERT_PARTLY_OK
mbedtls parse certificates was partly successful

ESP_ERR_MBEDTLS_CTR_DRBG_SEED_FAILED
mbedtls api returned error

ESP_ERR_MBEDTLS_SSL_SET_HOSTNAME_FAILED
mbedtls api returned error

ESP_ERR_MBEDTLS_SSL_CONFIG_DEFAULTS_FAILED
mbedtls api returned error

ESP_ERR_MBEDTLS_SSL_CONF_ALPN_PROTOCOLS_FAILED
mbedtls api returned error

ESP_ERR_MBEDTLS_X509_CRT_PARSE_FAILED
mbedtls api returned error

ESP_ERR_MBEDTLS_SSL_CONF_OWN_CERT_FAILED
mbedtls api returned error

ESP_ERR_MBEDTLS_SSL_SETUP_FAILED
mbedtls api returned error

ESP_ERR_MBEDTLS_SSL_WRITE_FAILED
mbedtls api returned error

ESP_ERR_MBEDTLS_PK_PARSE_KEY_FAILED
mbedtls api returned failed

ESP_ERR_MBEDTLS_SSL_HANDSHAKE_FAILED
mbedtls api returned failed

ESP_ERR_MBEDTLS_SSL_CONF_PSK_FAILED
mbedtls api returned failed

ESP_ERR_ESP_TLS_CONNECTION_TIMEOUT
new connection in esp_tls_low_level_conn connection timeouted

ESP_ERR_WOLFSSL_SSL_SET_HOSTNAME_FAILED
wolfSSL api returned error

ESP_ERR_WOLFSSL_SSL_CONF_ALPN_PROTOCOLS_FAILED
wolfSSL api returned error

ESP_ERR_WOLFSSL_CERT_VERIFY_SETUP_FAILED
wolfSSL api returned error

ESP_ERR_WOLFSSL_KEY_VERIFY_SETUP_FAILED
wolfSSL api returned error

ESP_ERR_WOLFSSL_SSL_HANDSHAKE_FAILED
wolfSSL api returned failed

ESP_ERR_WOLFSSL_CTX_SETUP_FAILED
wolfSSL api returned failed

ESP_ERR_WOLFSSL_SSL_SETUP_FAILED
wolfSSL api returned failed

ESP_ERR_WOLFSSL_SSL_WRITE_FAILED
wolfSSL api returned failed

ESP_ERR_ESP_TLS_SE_FAILED

ESP_TLS_ERR_SSL_WANT_READ

ESP_TLS_ERR_SSL_WANT_WRITE

ESP_TLS_ERR_SSL_TIMEOUT

Type Definitions

typedef struct *esp_tls_last_error* ***esp_tls_error_handle_t**
typedef struct *esp_tls_last_error* **esp_tls_last_error_t**
Error structure containing relevant errors in case tls error occurred.

typedef enum *esp_tls_conn_state* **esp_tls_conn_state_t**
ESP-TLS Connection State.

typedef enum *esp_tls_role* **esp_tls_role_t**

typedef struct *psk_key_hint* **psk_hint_key_t**
ESP-TLS preshared key and hint structure.

typedef struct *tls_keep_alive_cfg* **tls_keep_alive_cfg_t**
Keep alive parameters structure.

typedef struct *esp_tls_cfg* **esp_tls_cfg_t**
ESP-TLS configuration parameters.

Note Note about format of certificates:

- This structure includes certificates of a Certificate Authority, of client or server as well as private keys, which may be of PEM or DER format. In case of PEM format, the buffer must be NULL terminated (with NULL character included in certificate size).

- Certificate Authority’ s certificate may be a chain of certificates in case of PEM format, but could be only one certificate in case of DER format
- Variables names of certificates and private key buffers and sizes are defined as unions providing backward compatibility for legacy *_pem_buf and *_pem_bytes names which suggested only PEM format was supported. It is encouraged to use generic names such as cacert_buf and cacert_bytes.

typedef struct *esp_tls* **esp_tls_t**
ESP-TLS Connection Handle.

Enumerations

enum esp_tls_error_type_t
Definition of different types/sources of error codes reported from different components

Values:

ESP_TLS_ERR_TYPE_UNKNOWN = 0

ESP_TLS_ERR_TYPE_SYSTEM
System error errno

ESP_TLS_ERR_TYPE_MBEDTLS
Error code from mbedTLS library

ESP_TLS_ERR_TYPE_MBEDTLS_CERT_FLAGS
Certificate flags defined in mbedTLS

ESP_TLS_ERR_TYPE_ESP
ESP-IDF error type esp_err_t

ESP_TLS_ERR_TYPE_WOLFSSL
Error code from wolfSSL library

ESP_TLS_ERR_TYPE_WOLFSSL_CERT_FLAGS
Certificate flags defined in wolfSSL

ESP_TLS_ERR_TYPE_MAX
Last err type invalid entry

enum esp_tls_conn_state
ESP-TLS Connection State.

Values:

ESP_TLS_INIT = 0

ESP_TLS_CONNECTING

ESP_TLS_HANDSHAKE

ESP_TLS_FAIL

ESP_TLS_DONE

enum esp_tls_role
Values:

ESP_TLS_CLIENT = 0

ESP_TLS_SERVER

2.4.3 ESP HTTP Client

Overview

`esp_http_client` provides an API for making HTTP/S requests from ESP-IDF programs. The steps to use this API for an HTTP request are:

- *esp_http_client_init()*: To use the HTTP client, the first thing we must do is create an esp_http_client by pass into this function with the *esp_http_client_config_t* configurations. Which configuration values we do not define, the library will use default.
- *esp_http_client_perform()*: The esp_http_client argument created from the init function is needed. This function performs all operations of the esp_http_client, from opening the connection, sending data, downloading data and closing the connection if necessary. All related events will be invoked in the event_handle (defined by *esp_http_client_config_t*). This function performs its job and blocks the current task until it's done
- *esp_http_client_cleanup()*: After completing our **esp_http_client's** task, this is the last function to be called. It will close the connection (if any) and free up all the memory allocated to the HTTP client

Application Example

```
esp_err_t _http_event_handle(esp_http_client_event_t *evt)
{
    switch(evt->event_id) {
        case HTTP_EVENT_ERROR:
            ESP_LOGI(TAG, "HTTP_EVENT_ERROR");
            break;
        case HTTP_EVENT_ON_CONNECTED:
            ESP_LOGI(TAG, "HTTP_EVENT_ON_CONNECTED");
            break;
        case HTTP_EVENT_HEADER_SENT:
            ESP_LOGI(TAG, "HTTP_EVENT_HEADER_SENT");
            break;
        case HTTP_EVENT_ON_HEADER:
            ESP_LOGI(TAG, "HTTP_EVENT_ON_HEADER");
            printf("%.*s", evt->data_len, (char*)evt->data);
            break;
        case HTTP_EVENT_ON_DATA:
            ESP_LOGI(TAG, "HTTP_EVENT_ON_DATA, len=%d", evt->data_len);
            if (!esp_http_client_is_chunked_response(evt->client)) {
                printf("%.*s", evt->data_len, (char*)evt->data);
            }

            break;
        case HTTP_EVENT_ON_FINISH:
            ESP_LOGI(TAG, "HTTP_EVENT_ON_FINISH");
            break;
        case HTTP_EVENT_DISCONNECTED:
            ESP_LOGI(TAG, "HTTP_EVENT_DISCONNECTED");
            break;
    }
    return ESP_OK;
}

esp_http_client_config_t config = {
   .url = "http://httpbin.org/redirect/2",
   .event_handler = _http_event_handle,
};
esp_http_client_handle_t client = esp_http_client_init(&config);
esp_err_t err = esp_http_client_perform(client);

if (err == ESP_OK) {
   ESP_LOGI(TAG, "Status = %d, content_length = %d",
            esp_http_client_get_status_code(client),
            esp_http_client_get_content_length(client));
}
esp_http_client_cleanup(client);
```

Persistent Connections

Persistent connections means that the HTTP client can re-use the same connection for several transfers. If the server does not request to close the connection with the `Connection: close` header, the new transfer with sample ip address, port, and protocol.

To allow the HTTP client to take full advantage of persistent connections, you should do as many of your file transfers as possible using the same handle.

Persistent Connections example

```
esp_err_t err;
esp_http_client_config_t config = {
    .url = "http://httpbin.org/get",
};
esp_http_client_handle_t client = esp_http_client_init(&config);
// first request
err = esp_http_client_perform(client);

// second request
esp_http_client_set_url(client, "http://httpbin.org/anything")
esp_http_client_set_method(client, HTTP_METHOD_DELETE);
esp_http_client_set_header(client, "HeaderKey", "HeaderValue");
err = esp_http_client_perform(client);

esp_http_client_cleanup(client);
```

HTTPS

The HTTP client supports SSL connections using **mbedtls**, with the **url** configuration starting with `https` scheme (or `transport_type = HTTP_TRANSPORT_OVER_SSL`). HTTPS support can be configured via *CONFIG_ESP_HTTP_CLIENT_ENABLE_HTTPS* (enabled by default).

注解： By providing information using HTTPS, the library will use the SSL transport type to connect to the server. If you want to verify server, then need to provide additional certificate in PEM format, and provide to `cert_pem` in `esp_http_client_config_t`

HTTPS example

```
static void https()
{
    esp_http_client_config_t config = {
        .url = "https://www.howsmyssl.com",
        .cert_pem = howsmyssl_com_root_cert_pem_start,
    };
    esp_http_client_handle_t client = esp_http_client_init(&config);
    esp_err_t err = esp_http_client_perform(client);

    if (err == ESP_OK) {
        ESP_LOGI(TAG, "Status = %d, content_length = %d",
                esp_http_client_get_status_code(client),
                esp_http_client_get_content_length(client));
    }
    esp_http_client_cleanup(client);
}
```

HTTP Stream

Some applications need to open the connection and control the reading of the data in an active manner. the HTTP client supports some functions to make this easier, of course, once you use these functions you should not use the *esp_http_client_perform()* function with that handle, and *esp_http_client_init()* alway to called first to get the handle. Perform that functions in the order below:

- *esp_http_client_init()*: to create and handle
- esp_http_client_set_* or esp_http_client_delete_*: to modify the http connection information (optional)
- *esp_http_client_open()*: Open the http connection with write_len parameter, write_len=0 if we only need read
- *esp_http_client_write()*: Upload data, max length equal to write_len of *esp_http_client_open()* function. We may not need to call it if write_len=0
- *esp_http_client_fetch_headers()*: After sending the headers and write data (if any) to the server, this function will read the HTTP Server response headers. Calling this function will return the content-length from the Server, and we can call *esp_http_client_get_status_code()* for the HTTP status of the connection.
- *esp_http_client_read()*: Now, we can read the HTTP stream by this function.
- *esp_http_client_close()*: We should the connection after finish
- *esp_http_client_cleanup()*: And release the resources

Perform HTTP request as Stream reader Check the example function http_perform_as_stream_reader at protocols/esp_http_client.

HTTP Authentication

The HTTP client supports both **Basic** and **Digest** Authentication. By providing usernames and passwords in url or in the username, password of config entry. And with auth_type = HTTP_AUTH_TYPE_BASIC, the HTTP client takes only 1 perform to pass the authentication process. If auth_type = HTTP_AUTH_TYPE_NONE, but there are username and password in the configuration, the HTTP client takes 2 performs. The first time it connects to the server and receives the UNAUTHORIZED header. Based on this information, it will know which authentication method to choose, and perform it on the second.

Config authentication example with URI

```
esp_http_client_config_t config = {
    .url = "http://user:passwd@httpbin.org/basic-auth/user/passwd",
    .auth_type = HTTP_AUTH_TYPE_BASIC,
};
```

Config authentication example with username, password entry

```
esp_http_client_config_t config = {
    .url = "http://httpbin.org/basic-auth/user/passwd",
    .username = "user",
    .password = "passwd",
    .auth_type = HTTP_AUTH_TYPE_BASIC,
};
```

HTTP Client example: protocols/esp_http_client.

API Reference

Header File

- esp_http_client/include/esp_http_client.h

Functions

esp_http_client_handle_t **esp_http_client_init**(**const** *esp_http_client_config_t* **config*)

Start a HTTP session This function must be the first function to call, and it returns a esp_http_client_handle_t that you must use as input to other functions in the interface. This call MUST have a corresponding call to esp_http_client_cleanup when the operation is complete.

Return

- esp_http_client_handle_t
- NULL if any errors

Parameters

- [in] config: The configurations, see http_client_config_t

esp_err_t **esp_http_client_perform**(*esp_http_client_handle_t client*)

Invoke this function after esp_http_client_init and all the options calls are made, and will perform the transfer as described in the options. It must be called with the same esp_http_client_handle_t as input as the esp_http_client_init call returned. esp_http_client_perform performs the entire request in either blocking or non-blocking manner. By default, the API performs request in a blocking manner and returns when done, or if it failed, and in non-blocking manner, it returns if EAGAIN/EWOULDBLOCK or EINPROGRESS is encountered, or if it failed. And in case of non-blocking request, the user may call this API multiple times unless request & response is complete or there is a failure. To enable non-blocking esp_http_client_perform(), is_async member of *esp_http_client_config_t* must be set while making a call to esp_http_client_init() API. You can do any amount of calls to esp_http_client_perform while using the same esp_http_client_handle_t. The underlying connection may be kept open if the server allows it. If you intend to transfer more than one file, you are even encouraged to do so. esp_http_client will then attempt to re-use the same connection for the following transfers, thus making the operations faster, less CPU intense and using less network resources. Just note that you will have to use esp_http_client_set_** between the invokes to set options for the following esp_http_client_perform.

Note You must never call this function simultaneously from two places using the same client handle. Let the function return first before invoking it another time. If you want parallel transfers, you must use several esp_http_client_handle_t. This function include esp_http_client_open -> esp_http_client_write -> esp_http_client_fetch_headers -> esp_http_client_read (and option) esp_http_client_close.

Return

- ESP_OK on successful
- ESP_FAIL on error

Parameters

- client: The esp_http_client handle

esp_err_t **esp_http_client_set_url**(*esp_http_client_handle_t client*, **const** char **url*)

Set URL for client, when performing this behavior, the options in the URL will replace the old ones.

Return

- ESP_OK
- ESP_FAIL

Parameters

- [in] client: The esp_http_client handle
- [in] url: The url

esp_err_t **esp_http_client_set_post_field**(*esp_http_client_handle_t client*, **const** char **data*, int *len*)

Set post data, this function must be called before esp_http_client_perform. Note: The data parameter passed to this function is a pointer and this function will not copy the data.

Return

- ESP_OK
- ESP_FAIL

Parameters

- [in] client: The esp_http_client handle
- [in] data: post data pointer
- [in] len: post length

int **esp_http_client_get_post_field**(*esp_http_client_handle_t client*, char ***data*)

Get current post field information.

Return Size of post data

Parameters

- `[in] client`: The client
- `[out] data`: Point to post data pointer

esp_err_t **esp_http_client_set_header**(*esp_http_client_handle_t client*, **const** char ***key*, **const** char ***value*)

Set http request header, this function must be called after esp_http_client_init and before any perform function.

Return

- ESP_OK
- ESP_FAIL

Parameters

- `[in] client`: The esp_http_client handle
- `[in] key`: The header key
- `[in] value`: The header value

esp_err_t **esp_http_client_get_header**(*esp_http_client_handle_t client*, **const** char ***key*, char ****value*)

Get http request header. The value parameter will be set to NULL if there is no header which is same as the key specified, otherwise the address of header value will be assigned to value parameter. This function must be called after `esp_http_client_init`.

Return

- ESP_OK
- ESP_FAIL

Parameters

- `[in] client`: The esp_http_client handle
- `[in] key`: The header key
- `[out] value`: The header value

esp_err_t **esp_http_client_get_username**(*esp_http_client_handle_t client*, char ****value*)

Get http request username. The address of username buffer will be assigned to value parameter. This function must be called after `esp_http_client_init`.

Return

- ESP_OK
- ESP_ERR_INVALID_ARG

Parameters

- `[in] client`: The esp_http_client handle
- `[out] value`: The username value

esp_err_t **esp_http_client_set_username**(*esp_http_client_handle_t client*, **const** char ***username*)

Set http request username. The value of username parameter will be assigned to username buffer. If the username parameter is NULL then username buffer will be freed.

Return

- ESP_OK
- ESP_ERR_INVALID_ARG

Parameters

- `[in] client`: The esp_http_client handle
- `[in] username`: The username value

esp_err_t **esp_http_client_get_password**(*esp_http_client_handle_t client*, char ****value*)

Get http request password. The address of password buffer will be assigned to value parameter. This function must be called after `esp_http_client_init`.

Return

- ESP_OK
- ESP_ERR_INVALID_ARG

Parameters

- `[in] client`: The esp_http_client handle
- `[out] value`: The password value

esp_err_t **esp_http_client_set_password**(*esp_http_client_handle_t client*, char **password*)

Set http request password. The value of password parameter will be assigned to password buffer. If the password parameter is NULL then password buffer will be freed.

Return
- ESP_OK
- ESP_ERR_INVALID_ARG

Parameters
- `[in] client`: The esp_http_client handle
- `[in] password`: The password value

esp_err_t **esp_http_client_set_authtype**(*esp_http_client_handle_t client*, *esp_http_client_auth_type_t auth_type*)

Set http request auth_type.

Return
- ESP_OK
- ESP_ERR_INVALID_ARG

Parameters
- `[in] client`: The esp_http_client handle
- `[in] auth_type`: The esp_http_client auth type

esp_err_t **esp_http_client_set_method**(*esp_http_client_handle_t client*, *esp_http_client_method_t method*)

Set http request method.

Return
- ESP_OK
- ESP_ERR_INVALID_ARG

Parameters
- `[in] client`: The esp_http_client handle
- `[in] method`: The method

esp_err_t **esp_http_client_delete_header**(*esp_http_client_handle_t client*, **const** char **key*)

Delete http request header.

Return
- ESP_OK
- ESP_FAIL

Parameters
- `[in] client`: The esp_http_client handle
- `[in] key`: The key

esp_err_t **esp_http_client_open**(*esp_http_client_handle_t client*, int *write_len*)

This function will be open the connection, write all header strings and return.

Return
- ESP_OK
- ESP_FAIL

Parameters
- `[in] client`: The esp_http_client handle
- `[in] write_len`: HTTP Content length need to write to the server

int **esp_http_client_write**(*esp_http_client_handle_t client*, **const** char **buffer*, int *len*)

This function will write data to the HTTP connection previously opened by esp_http_client_open()

Return
- (-1) if any errors
- Length of data written

Parameters
- `[in] client`: The esp_http_client handle

- `buffer`: The buffer
- `[in] len`: This value must not be larger than the write_len parameter provided to esp_http_client_open()

int **esp_http_client_fetch_headers**(*esp_http_client_handle_t client*)

This function need to call after esp_http_client_open, it will read from http stream, process all receive headers.

Return
- (0) if stream doesn't contain content-length header, or chunked encoding (checked by `esp_http_client_is_chunked` response)
- (-1: ESP_FAIL) if any errors
- Download data length defined by content-length header

Parameters
- `[in] client`: The esp_http_client handle

bool **esp_http_client_is_chunked_response**(*esp_http_client_handle_t client*)

Check response data is chunked.

Return true or false

Parameters
- `[in] client`: The esp_http_client handle

int **esp_http_client_read**(*esp_http_client_handle_t client*, char ***buffer*, int *len*)

Read data from http stream.

Return
- (-1) if any errors
- Length of data was read

Parameters
- `[in] client`: The esp_http_client handle
- `buffer`: The buffer
- `[in] len`: The length

int **esp_http_client_get_status_code**(*esp_http_client_handle_t client*)

Get http response status code, the valid value if this function invoke after `esp_http_client_perform`

Return Status code

Parameters
- `[in] client`: The esp_http_client handle

int **esp_http_client_get_content_length**(*esp_http_client_handle_t client*)

Get http response content length (from header Content-Length) the valid value if this function invoke after `esp_http_client_perform`

Return
- (-1) Chunked transfer
- Content-Length value as bytes

Parameters
- `[in] client`: The esp_http_client handle

esp_err_t **esp_http_client_close**(*esp_http_client_handle_t client*)

Close http connection, still kept all http request resources.

Return
- ESP_OK
- ESP_FAIL

Parameters
- `[in] client`: The esp_http_client handle

esp_err_t **esp_http_client_cleanup**(*esp_http_client_handle_t client*)

This function must be the last function to call for an session. It is the opposite of the esp_http_client_init function and must be called with the same handle as input that a esp_http_client_init call returned. This might close all connections this handle has used and possibly has kept open until now. Don't call this function if you intend to transfer more files, re-using handles is a key to good performance with esp_http_client.

Return
- ESP_OK
- ESP_FAIL

Parameters
- `[in] client`: The esp_http_client handle

esp_http_client_transport_t **esp_http_client_get_transport_type** (*esp_http_client_handle_t client*)

Get transport type.

Return
- HTTP_TRANSPORT_UNKNOWN
- HTTP_TRANSPORT_OVER_TCP
- HTTP_TRANSPORT_OVER_SSL

Parameters
- `[in] client`: The esp_http_client handle

esp_err_t **esp_http_client_set_redirection** (*esp_http_client_handle_t client*)

Set redirection URL. When received the 30x code from the server, the client stores the redirect URL provided by the server. This function will set the current URL to redirect to enable client to execute the redirection request.

Return
- ESP_OK
- ESP_FAIL

Parameters
- `[in] client`: The esp_http_client handle

void **esp_http_client_add_auth** (*esp_http_client_handle_t client*)

On receiving HTTP Status code 401, this API can be invoked to add authorization information.

Note There is a possibility of receiving body message with redirection status codes, thus make sure to flush off body data after calling this API.

Parameters
- `[in] client`: The esp_http_client handle

bool **esp_http_client_is_complete_data_received** (*esp_http_client_handle_t client*)

Checks if entire data in the response has been read without any error.

Return
- true
- false

Parameters
- `[in] client`: The esp_http_client handle

int **esp_http_client_read_response** (*esp_http_client_handle_t client*, char **buffer*, int *len*)

Helper API to read larger data chunks This is a helper API which internally calls `esp_http_client_read` multiple times till the end of data is reached or till the buffer gets full.

Return
- Length of data was read

Parameters
- `[in] client`: The esp_http_client handle
- `buffer`: The buffer
- `[in] len`: The buffer length

esp_err_t **esp_http_client_flush_response** (*esp_http_client_handle_t client*, int **len*)

Process all remaining response data This uses an internal buffer to repeatedly receive, parse, and discard response data until complete data is processed. As no additional user-supplied buffer is required, this may be preferrable to `esp_http_client_read_response` in situations where the content of the response may be ignored.

Return
- ESP_OK If successful, len will have discarded length

- ESP_FAIL If failed to read response
- ESP_ERR_INVALID_ARG If the client is NULL

Parameters

- `[in] client`: The esp_http_client handle
- `len`: Length of data discarded

esp_err_t **esp_http_client_get_url** (*esp_http_client_handle_t client*, char **url*, **const** int *len*)

Get URL from client.

Return

- ESP_OK
- ESP_FAIL

Parameters

- `[in] client`: The esp_http_client handle
- `[inout] url`: The buffer to store URL
- `[in] len`: The buffer length

esp_err_t **esp_http_client_get_chunk_length** (*esp_http_client_handle_t client*, int **len*)

Get Chunk-Length from client.

Return

- ESP_OK If successful, len will have length of current chunk
- ESP_FAIL If the server is not a chunked server
- ESP_ERR_INVALID_ARG If the client or len are NULL

Parameters

- `[in] client`: The esp_http_client handle
- `[out] len`: Variable to store length

Structures

struct esp_http_client_event

HTTP Client events data.

Public Members

esp_http_client_event_id_t **event_id**

event_id, to know the cause of the event

esp_http_client_handle_t **client**

esp_http_client_handle_t context

void ***data**

data of the event

int **data_len**

data length of data

void ***user_data**

user_data context, from *esp_http_client_config_t* user_data

char ***header_key**

For HTTP_EVENT_ON_HEADER event_id, it's store current http header key

char ***header_value**

For HTTP_EVENT_ON_HEADER event_id, it's store current http header value

struct esp_http_client_config_t

HTTP configuration.

Public Members

const char ***url**

HTTP URL, the information on the URL is most important, it overrides the other fields below, if any

const char ***host**
Domain or IP as string

int **port**
Port to connect, default depend on esp_http_client_transport_t (80 or 443)

const char ***username**
Using for Http authentication

const char ***password**
Using for Http authentication

esp_http_client_auth_type_t **auth_type**
Http authentication type, see `esp_http_client_auth_type_t`

const char ***path**
HTTP Path, if not set, default is `/`

const char ***query**
HTTP query

const char ***cert_pem**
SSL server certification, PEM format as string, if the client requires to verify server

const char ***client_cert_pem**
SSL client certification, PEM format as string, if the server requires to verify client

const char ***client_key_pem**
SSL client key, PEM format as string, if the server requires to verify client

const char ***client_key_password**
Client key decryption password string

size_t **client_key_password_len**
String length of the password pointed to by client_key_password

const char ***user_agent**
The User Agent string to send with HTTP requests

esp_http_client_method_t **method**
HTTP Method

int **timeout_ms**
Network timeout in milliseconds

bool **disable_auto_redirect**
Disable HTTP automatic redirects

int **max_redirection_count**
Max number of redirections on receiving HTTP redirect status code, using default value if zero

int **max_authorization_retries**
Max connection retries on receiving HTTP unauthorized status code, using default value if zero. Disables authorization retry if -1

http_event_handle_cb **event_handler**
HTTP Event Handle

esp_http_client_transport_t **transport_type**
HTTP transport type, see `esp_http_client_transport_t`

int **buffer_size**
HTTP receive buffer size

int **buffer_size_tx**
HTTP transmit buffer size

void ***user_data**
HTTP user_data context

bool **is_async**
Set asynchronous mode, only supported with HTTPS for now

bool **use_global_ca_store**
Use a global ca_store for all the connections in which this bool is set.

bool **skip_cert_common_name_check**
Skip any validation of server certificate CN field

esp_err_t (***crt_bundle_attach**) (void *conf)
Function pointer to esp_crt_bundle_attach. Enables the use of certification bundle for server verification, must be enabled in menuconfig

bool **keep_alive_enable**
Enable keep-alive timeout

int **keep_alive_idle**
Keep-alive idle time. Default is 5 (second)

int **keep_alive_interval**
Keep-alive interval time. Default is 5 (second)

int **keep_alive_count**
Keep-alive packet retry send count. Default is 3 counts

Macros

DEFAULT_HTTP_BUF_SIZE

ESP_ERR_HTTP_BASE
Starting number of HTTP error codes

ESP_ERR_HTTP_MAX_REDIRECT
The error exceeds the number of HTTP redirects

ESP_ERR_HTTP_CONNECT
Error open the HTTP connection

ESP_ERR_HTTP_WRITE_DATA
Error write HTTP data

ESP_ERR_HTTP_FETCH_HEADER
Error read HTTP header from server

ESP_ERR_HTTP_INVALID_TRANSPORT
There are no transport support for the input scheme

ESP_ERR_HTTP_CONNECTING
HTTP connection hasn’ t been established yet

ESP_ERR_HTTP_EAGAIN
Mapping of errno EAGAIN to esp_err_t

Type Definitions

typedef struct esp_http_client ***esp_http_client_handle_t**

typedef struct *esp_http_client_event* ***esp_http_client_event_handle_t**

typedef struct *esp_http_client_event* **esp_http_client_event_t**
HTTP Client events data.

typedef *esp_err_t* (***http_event_handle_cb**) (*esp_http_client_event_t* *evt)

Enumerations

enum esp_http_client_event_id_t
HTTP Client events id.

Values:

HTTP_EVENT_ERROR = 0
This event occurs when there are any errors during execution

HTTP_EVENT_ON_CONNECTED
Once the HTTP has been connected to the server, no data exchange has been performed

HTTP_EVENT_HEADERS_SENT
After sending all the headers to the server

HTTP_EVENT_HEADER_SENT = *HTTP_EVENT_HEADERS_SENT*
This header has been kept for backward compatability and will be deprecated in future versions esp-idf

HTTP_EVENT_ON_HEADER
Occurs when receiving each header sent from the server

HTTP_EVENT_ON_DATA
Occurs when receiving data from the server, possibly multiple portions of the packet

HTTP_EVENT_ON_FINISH
Occurs when finish a HTTP session

HTTP_EVENT_DISCONNECTED
The connection has been disconnected

enum esp_http_client_transport_t
HTTP Client transport.

Values:

HTTP_TRANSPORT_UNKNOWN = 0x0
Unknown

HTTP_TRANSPORT_OVER_TCP
Transport over tcp

HTTP_TRANSPORT_OVER_SSL
Transport over ssl

enum esp_http_client_method_t
HTTP method.

Values:

HTTP_METHOD_GET = 0
HTTP GET Method

HTTP_METHOD_POST
HTTP POST Method

HTTP_METHOD_PUT
HTTP PUT Method

HTTP_METHOD_PATCH
HTTP PATCH Method

HTTP_METHOD_DELETE
HTTP DELETE Method

HTTP_METHOD_HEAD
HTTP HEAD Method

HTTP_METHOD_NOTIFY
HTTP NOTIFY Method

HTTP_METHOD_SUBSCRIBE
HTTP SUBSCRIBE Method

HTTP_METHOD_UNSUBSCRIBE
HTTP UNSUBSCRIBE Method

HTTP_METHOD_OPTIONS
HTTP OPTIONS Method

HTTP_METHOD_COPY
HTTP COPY Method

HTTP_METHOD_MOVE
HTTP MOVE Method

HTTP_METHOD_LOCK
HTTP LOCK Method

HTTP_METHOD_UNLOCK
HTTP UNLOCK Method

HTTP_METHOD_PROPFIND
HTTP PROPFIND Method

HTTP_METHOD_PROPPATCH
HTTP PROPPATCH Method

HTTP_METHOD_MKCOL
HTTP MKCOL Method

HTTP_METHOD_MAX

enum esp_http_client_auth_type_t
HTTP Authentication type.

Values:

HTTP_AUTH_TYPE_NONE = 0
No authention

HTTP_AUTH_TYPE_BASIC
HTTP Basic authentication

HTTP_AUTH_TYPE_DIGEST
HTTP Disgest authentication

enum HttpStatus_Code
Enum for the HTTP status codes.

Values:

HttpStatus_Ok = 200

HttpStatus_MultipleChoices = 300

HttpStatus_MovedPermanently = 301

HttpStatus_Found = 302

HttpStatus_SeeOther = 303

HttpStatus_TemporaryRedirect = 307

HttpStatus_PermanentRedirect = 308

HttpStatus_BadRequest = 400

HttpStatus_Unauthorized = 401

HttpStatus_Forbidden = 403

HttpStatus_NotFound = 404

HttpStatus_InternalError = 500

2.4.4 ESP WebSocket Client

Overview

The ESP WebSocket client is an implementation of WebSocket protocol client for ESP32

Features

- Supports WebSocket over TCP, TLS with mbedtls
- Easy to setup with URI
- Multiple instances (Multiple clients in one application)

Configuration

URI

- Supports `ws`, `wss` schemes
- WebSocket samples:
  - `ws://echo.websocket.org`: WebSocket over TCP, default port 80
  - `wss://echo.websocket.org`: WebSocket over SSL, default port 443

Minimal configurations:

```
const esp_websocket_client_config_t ws_cfg = {
    .uri = "ws://echo.websocket.org",
};
```

The WebSocket client supports the use of both path and query in the URI. Sample:

```
const esp_websocket_client_config_t ws_cfg = {
    .uri = "ws://echo.websocket.org/connectionhandler?id=104",
};
```

If there are any options related to the URI in *esp_websocket_client_config_t*, the option defined by the URI will be overridden. Sample:

```
const esp_websocket_client_config_t ws_cfg = {
    .uri = "ws://echo.websocket.org:123",
    .port = 4567,
};
//WebSocket client will connect to websocket.org using port 4567
```

TLS Configuration:

```
const esp_websocket_client_config_t ws_cfg = {
    .uri = "wss://echo.websocket.org",
    .cert_pem = (const char *)websocket_org_pem_start,
};
```

注解: If you want to verify the server, then you need to provide a certificate in PEM format, and provide to `cert_pem` in `websocket_client_config_t`. If no certficate is provided then the TLS connection will to default not requiring verification.

PEM certificate for this example could be extracted from an openssl *s_client* command connecting to websocket.org. In case a host operating system has *openssl* and *sed* packages installed, one could execute the following command to download and save the root or intermediate root certificate to a file (Note for Windows users: Both Linux like environment or Windows native packages may be used). ` echo "" | openssl s_client -showcerts

```
-connect websocket.org:443 | sed -n "1,/Root/d; /BEGIN/,/END/p" | openssl
x509 -outform PEM >websocket_org.pem `
```

This command will extract the second certificate in the chain and save it as a pem-file.

Subprotocol The subprotocol field in the config struct can be used to request a subprotocol

```
const esp_websocket_client_config_t ws_cfg = {
    .uri = "ws://websocket.org",
    .subprotocol = "soap",
};
```

注解: The client is indifferent to the subprotocol field in the server response and will accept the connection no matter what the server replies.

For more options on *esp_websocket_client_config_t*, please refer to API reference below

Events

- *WEBSOCKET_EVENT_CONNECTED*: The client has successfully established a connection to the server. The client is now ready to send and receive data. Contains no event data.
- *WEBSOCKET_EVENT_DISCONNECTED*: The client has aborted the connection due to the transport layer failing to read data, e.g. because the server is unavailable. Contains no event data.
- *WEBSOCKET_EVENT_DATA*: The client has successfully received and parsed a WebSocket frame. The event data contains a pointer to the payload data, the length of the payload data as well as the opcode of the received frame. A message may be fragmented into multiple events if the length exceeds the buffer size. This event will also be posted for non-payload frames, e.g. pong or connection close frames.
- *WEBSOCKET_EVENT_ERROR*: Not used in the current implementation of the client.

If the client handle is needed in the event handler it can be accessed through the pointer passed to the event handler:

```
esp_websocket_client_handle_t client = (esp_websocket_client_handle_t)handler_args;
```

Limitations and Known Issues

- The client is able to request the use of a subprotocol from the server during the handshake, but does not do any subprotocol related checks on the response from the server.

Application Example

A simple WebSocket example that uses esp_websocket_client to establish a websocket connection and send/receive data with the websocket.org server can be found here: protocols/websocket.

Sending Text Data The WebSocket client supports sending data as a text data frame, which informs the application layer that the payload data is text data encoded as UTF-8. Example:

```
esp_websocket_client_send_text(client, data, len, portMAX_DELAY);
```

API Reference

Header File

- esp_websocket_client/include/esp_websocket_client.h

Functions

esp_websocket_client_handle_t **esp_websocket_client_init**(**const** *esp_websocket_client_config_t* **config*)

Start a Websocket session This function must be the first function to call, and it returns a esp_websocket_client_handle_t that you must use as input to other functions in the interface. This call MUST have a corresponding call to esp_websocket_client_destroy when the operation is complete.

Return
- esp_websocket_client_handle_t
- NULL if any errors

Parameters
- [in] config: The configuration

esp_err_t **esp_websocket_client_set_uri**(*esp_websocket_client_handle_t client*, **const** char **uri*)

Set URL for client, when performing this behavior, the options in the URL will replace the old ones Must stop the WebSocket client before set URI if the client has been connected.

Return esp_err_t

Parameters
- [in] client: The client
- [in] uri: The uri

esp_err_t **esp_websocket_client_start**(*esp_websocket_client_handle_t client*)

Open the WebSocket connection.

Return esp_err_t

Parameters
- [in] client: The client

esp_err_t **esp_websocket_client_stop**(*esp_websocket_client_handle_t client*)

Stops the WebSocket connection without websocket closing handshake.

This API stops ws client and closes TCP connection directly without sending close frames. It is a good practice to close the connection in a clean way using esp_websocket_client_close().

Notes:

- Cannot be called from the websocket event handler

Return esp_err_t

Parameters
- [in] client: The client

esp_err_t **esp_websocket_client_destroy**(*esp_websocket_client_handle_t client*)

Destroy the WebSocket connection and free all resources. This function must be the last function to call for an session. It is the opposite of the esp_websocket_client_init function and must be called with the same handle as input that a esp_websocket_client_init call returned. This might close all connections this handle has used.

Notes:

- Cannot be called from the websocket event handler

Return esp_err_t

Parameters
- [in] client: The client

int **esp_websocket_client_send**(*esp_websocket_client_handle_t client*, **const** char **data*, int *len*, TickType_t *timeout*)

Generic write data to the WebSocket connection; defaults to binary send.

Return
- Number of data was sent
- (-1) if any errors

Parameters
- [in] client: The client
- [in] data: The data

- [in] len: The length
- [in] timeout: Write data timeout in RTOS ticks

int **esp_websocket_client_send_bin**(*esp_websocket_client_handle_t client*, **const** char ***data*, int *len*, TickType_t *timeout*)

Write binary data to the WebSocket connection (data send with WS OPCODE=02, i.e. binary)

Return
- Number of data was sent
- (-1) if any errors

Parameters
- [in] client: The client
- [in] data: The data
- [in] len: The length
- [in] timeout: Write data timeout in RTOS ticks

int **esp_websocket_client_send_text**(*esp_websocket_client_handle_t client*, **const** char ***data*, int *len*, TickType_t *timeout*)

Write textual data to the WebSocket connection (data send with WS OPCODE=01, i.e. text)

Return
- Number of data was sent
- (-1) if any errors

Parameters
- [in] client: The client
- [in] data: The data
- [in] len: The length
- [in] timeout: Write data timeout in RTOS ticks

esp_err_t **esp_websocket_client_close**(*esp_websocket_client_handle_t client*, TickType_t *timeout*)

Close the WebSocket connection in a clean way.

Sequence of clean close initiated by client:

- Client sends CLOSE frame
- Client waits until server echos the CLOSE frame
- Client waits until server closes the connection
- Client is stopped the same way as by the esp_websocket_client_stop()
  Notes:
  - Cannot be called from the websocket event handler

Return esp_err_t

Parameters
- [in] client: The client
- [in] timeout: Timeout in RTOS ticks for waiting

esp_err_t **esp_websocket_client_close_with_code**(*esp_websocket_client_handle_t client*, int *code*, **const** char ***data*, int *len*, TickType_t *timeout*)

Close the WebSocket connection in a clean way with custom code/data Closing sequence is the same as for esp_websocket_client_close()

Notes:

- Cannot be called from the websocket event handler

Return esp_err_t

Parameters
- [in] client: The client
- [in] code: Close status code as defined in RFC6455 section-7.4
- [in] data: Additional data to closing message
- [in] len: The length of the additional data
- [in] timeout: Timeout in RTOS ticks for waiting

bool **esp_websocket_client_is_connected**(*esp_websocket_client_handle_t client*)

Check the WebSocket client connection state.

Return

- true
- false

Parameters

- `[in] client`: The client handle

esp_err_t **esp_websocket_register_events**(*esp_websocket_client_handle_t client*, *esp_websocket_event_id_t event*, *esp_event_handler_t event_handler*, void *event_handler_arg)

Register the Websocket Events.

Return esp_err_t

Parameters

- `client`: The client handle
- `event`: The event id
- `event_handler`: The callback function
- `event_handler_arg`: User context

Structures

struct esp_websocket_event_data_t

Websocket event data.

Public Members

const char ***data_ptr**

Data pointer

int **data_len**

Data length

uint8_t **op_code**

Received opcode

esp_websocket_client_handle_t **client**

esp_websocket_client_handle_t context

void ***user_context**

user_data context, from *esp_websocket_client_config_t* user_data

int **payload_len**

Total payload length, payloads exceeding buffer will be posted through multiple events

int **payload_offset**

Actual offset for the data associated with this event

struct esp_websocket_client_config_t

Websocket client setup configuration.

Public Members

const char ***uri**

Websocket URI, the information on the URI can be overrides the other fields below, if any

const char ***host**

Domain or IP as string

int **port**

Port to connect, default depend on esp_websocket_transport_t (80 or 443)

const char ***username**
Using for Http authentication - Not supported for now

const char ***password**
Using for Http authentication - Not supported for now

const char ***path**
HTTP Path, if not set, default is `/`

bool **disable_auto_reconnect**
Disable the automatic reconnect function when disconnected

void ***user_context**
HTTP user data context

int **task_prio**
Websocket task priority

int **task_stack**
Websocket task stack

int **buffer_size**
Websocket buffer size

const char ***cert_pem**
Pointer to certificate data in PEM or DER format for server verify (with SSL), default is NULL, not required to verify the server. PEM-format must have a terminating NULL-character. DER-format requires the length to be passed in cert_len.

size_t **cert_len**
Length of the buffer pointed to by cert_pem. May be 0 for null-terminated pem

const char ***client_cert**
Pointer to certificate data in PEM or DER format for SSL mutual authentication, default is NULL, not required if mutual authentication is not needed. If it is not NULL, also `client_key` has to be provided. PEM-format must have a terminating NULL-character. DER-format requires the length to be passed in client_cert_len.

size_t **client_cert_len**
Length of the buffer pointed to by client_cert. May be 0 for null-terminated pem

const char ***client_key**
Pointer to private key data in PEM or DER format for SSL mutual authentication, default is NULL, not required if mutual authentication is not needed. If it is not NULL, also `client_cert` has to be provided. PEM-format must have a terminating NULL-character. DER-format requires the length to be passed in client_key_len

size_t **client_key_len**
Length of the buffer pointed to by client_key_pem. May be 0 for null-terminated pem

esp_websocket_transport_t **transport**
Websocket transport type, see ‘esp_websocket_transport_t

char ***subprotocol**
Websocket subprotocol

char ***user_agent**
Websocket user-agent

char ***headers**
Websocket additional headers

int **pingpong_timeout_sec**
Period before connection is aborted due to no PONGs received

bool **disable_pingpong_discon**
Disable auto-disconnect due to no PONG received within pingpong_timeout_sec

bool **use_global_ca_store**
Use a global ca_store for all the connections in which this bool is set.

bool **skip_cert_common_name_check**
Skip any validation of server certificate CN field

bool **keep_alive_enable**
Enable keep-alive timeout

int **keep_alive_idle**
Keep-alive idle time. Default is 5 (second)

int **keep_alive_interval**
Keep-alive interval time. Default is 5 (second)

int **keep_alive_count**
Keep-alive packet retry send count. Default is 3 counts

size_t **ping_interval_sec**
Websocket ping interval, defaults to 10 seconds if not set

Type Definitions

typedef struct esp_websocket_client ***esp_websocket_client_handle_t**

Enumerations

enum esp_websocket_event_id_t
Websocket Client events id.

Values:

WEBSOCKET_EVENT_ANY = -1

WEBSOCKET_EVENT_ERROR = 0
This event occurs when there are any errors during execution

WEBSOCKET_EVENT_CONNECTED
Once the Websocket has been connected to the server, no data exchange has been performed

WEBSOCKET_EVENT_DISCONNECTED
The connection has been disconnected

WEBSOCKET_EVENT_DATA
When receiving data from the server, possibly multiple portions of the packet

WEBSOCKET_EVENT_CLOSED
The connection has been closed cleanly

WEBSOCKET_EVENT_MAX

enum esp_websocket_transport_t
Websocket Client transport.

Values:

WEBSOCKET_TRANSPORT_UNKNOWN = 0x0
Transport unknown

WEBSOCKET_TRANSPORT_OVER_TCP
Transport over tcp

WEBSOCKET_TRANSPORT_OVER_SSL
Transport over ssl

2.4.5 HTTP 服务器

概述

HTTP Server 组件提供了在 ESP32 上运行轻量级 Web 服务器的功能，下面介绍使用 HTTP Server 组件 API 的详细步骤：

- *httpd_start()*：创建 HTTP 服务器的实例，根据具体的配置为其分配内存和资源，并返回该服务器实例的句柄。服务器使用了两个套接字，一个用来监听 HTTP 流量（TCP 类型），另一个用来处理控制信号（UDP 类型），它们在服务器的任务循环中轮流使用。通过向 httpd_start() 传递 httpd_config_t 结构体，可以在创建服务器实例时配置任务的优先级和堆栈的大小。TCP 流量被解析为 HTTP 请求，根据请求的 URI 来调用用户注册的处理程序，在处理程序中需要发送回 HTTP 响应数据包。
- *httpd_stop()*：根据传入的句柄停止服务器，并释放相关联的内存和资源。这是一个阻塞函数，首先给服务器任务发送停止信号，然后等待其终止。期间服务器任务会关闭所有已打开的连接，删除已注册的 URI 处理程序，并将所有会话的上下文数据重置为空。
- *httpd_register_uri_handler()*：通过传入 `httpd_uri_t` 结构体类型的对象来注册 URI 处理程序。该结构体包含如下成员：`uri` 名字，`method` 类型（比如 `HTTPD_GET/HTTPD_POST/HTTPD_PUT` 等等），`esp_err_t *handler (httpd_req_t *req)` 类型的函数指针，指向用户上下文数据的 `user_ctx` 指针。

应用示例

```
/* URI 处理函数，在客户端发起 GET /uri 请求时被调用 */
esp_err_t get_handler(httpd_req_t *req)
{
    /* 发送回简单的响应数据包 */
    const char[] resp = "URI GET Response";
    httpd_resp_send(req, resp, HTTPD_RESP_USE_STRLEN);
    return ESP_OK;
}

/* URI 处理函数，在客户端发起 POST /uri 请求时被调用 */
esp_err_t post_handler(httpd_req_t *req)
{
    /* 定义 HTTP POST 请求数据的目标缓存区
     * httpd_req_recv() 只接收 char* 数据，但也可以是任意二进制数据（需要类型转换）
     * 对于字符串数据，null 终止符会被省略，content_len 会给出字符串的长度 */
    char content[100];

    /* 如果内容长度大于缓冲区则截断 */
    size_t recv_size = MIN(req->content_len, sizeof(content));

    int ret = httpd_req_recv(req, content, recv_size);
    if (ret <= 0) {  /* 返回 0 表示连接已关闭 */
        /* 检查是否超时 */
        if (ret == HTTPD_SOCK_ERR_TIMEOUT) {
            /* 如果是超时，可以调用 httpd_req_recv() 重试
             * 简单起见，这里我们直接响应 HTTP 408（请求超时）错误给客户端 */
            httpd_resp_send_408(req);
        }
        /* 如果发生了错误，返回 ESP_FAIL 可以确保底层套接字被关闭 */
        return ESP_FAIL;
    }

    /* 发送简单的响应数据包 */
    const char[] resp = "URI POST Response";
    httpd_resp_send(req, resp, HTTPD_RESP_USE_STRLEN);
    return ESP_OK;
}
```

（下页继续）

(续上页)

```
/* GET /uri 的 URI 处理结构 */
httpd_uri_t uri_get = {
    .uri      = "/uri",
    .method   = HTTP_GET,
    .handler  = get_handler,
    .user_ctx = NULL
};

/* POST /uri 的 URI 处理结构 */
httpd_uri_t uri_post = {
    .uri      = "/uri",
    .method   = HTTP_POST,
    .handler  = post_handler,
    .user_ctx = NULL
};

/* 启动 Web 服务器的函数 */
httpd_handle_t start_webserver(void)
{
    /* 生成默认的配置参数 */
    httpd_config_t config = HTTPD_DEFAULT_CONFIG();

    /* 置空 esp_http_server 的实例句柄 */
    httpd_handle_t server = NULL;

    /* 启动 httpd server */
    if (httpd_start(&server, &config) == ESP_OK) {
        /* 注册 URI 处理程序 */
        httpd_register_uri_handler(server, &uri_get);
        httpd_register_uri_handler(server, &uri_post);
    }
    /* 如果服务器启动失败，返回的句柄是 NULL */
    return server;
}

/* 停止 Web 服务器的函数 */
void stop_webserver(httpd_handle_t server)
{
    if (server) {
        /* 停止 httpd server */
        httpd_stop(server);
    }
}
```

简单 HTTP 服务器示例 请查看位于 protocols/http_server/simple 的 HTTP 服务器示例，该示例演示了如何处理任意内容长度的数据，读取请求头和 URL 查询参数，设置响应头。

HTTP 长连接

HTTP 服务器具有长连接的功能，允许重复使用同一个连接（会话）进行多次传输，同时保持会话的上下文数据。上下文数据可由处理程序动态分配，在这种情况下需要提前指定好自定义的回调函数，以便在连接/会话被关闭时释放这部分内存资源。

长连接示例

```
/* 自定义函数，用来释放上下文数据 */
void free_ctx_func(void *ctx)
```

(下页继续)

(续上页)

```
{
    /* 也可以是 free 以外的代码逻辑 */
    free(ctx);
}

esp_err_t adder_post_handler(httpd_req_t *req)
{
    /* 如果会话上下文还不存在则新建一个 */
    if (! req->sess_ctx) {
        req->sess_ctx = malloc(sizeof(ANY_DATA_TYPE));   /*!< 指向上下文数据 */
        req->free_ctx = free_ctx_func;                   /*!< 释放上下文数据的函数 */
    }

    /* 访问上下文数据 */
    ANY_DATA_TYPE *ctx_data = (ANY_DATA_TYPE *)req->sess_ctx;

    /* 响应 */
    ..............
    ..............
    ..............

    return ESP_OK;
}
```

详情请参考位于 protocols/http_server/persistent_sockets 的示例代码。

API 参考

Header File

- esp_http_server/include/esp_http_server.h

Functions

esp_err_t **httpd_register_uri_handler** (*httpd_handle_t handle*, **const** *httpd_uri_t *uri_handler*)

Registers a URI handler.

Example usage:

```
esp_err_t my_uri_handler(httpd_req_t* req)
{
    // Recv , Process and Send
    ....
    ....
    ....

    // Fail condition
    if (....) {
        // Return fail to close session //
        return ESP_FAIL;
    }

    // On success
    return ESP_OK;
}

// URI handler structure
httpd_uri_t my_uri {
    .uri      = "/my_uri/path/xyz",
    .method   = HTTPD_GET,
```

(下页继续)

(续上页)

```
    .handler  = my_uri_handler,
    .user_ctx = NULL
};

// Register handler
if (httpd_register_uri_handler(server_handle, &my_uri) != ESP_OK) {
   // If failed to register handler
   ....
}
```

Note URI handlers can be registered in real time as long as the server handle is valid.

Return

- ESP_OK : On successfully registering the handler
- ESP_ERR_INVALID_ARG : Null arguments
- ESP_ERR_HTTPD_HANDLERS_FULL : If no slots left for new handler
- ESP_ERR_HTTPD_HANDLER_EXISTS : If handler with same URI and method is already registered

Parameters

- `[in] handle`: handle to HTTPD server instance
- `[in] uri_handler`: pointer to handler that needs to be registered

esp_err_t **httpd_unregister_uri_handler**(*httpd_handle_t handle*, **const** char **uri*, *httpd_method_t method*)

Unregister a URI handler.

Return

- ESP_OK : On successfully deregistering the handler
- ESP_ERR_INVALID_ARG : Null arguments
- ESP_ERR_NOT_FOUND : Handler with specified URI and method not found

Parameters

- `[in] handle`: handle to HTTPD server instance
- `[in] uri`: URI string
- `[in] method`: HTTP method

esp_err_t **httpd_unregister_uri**(*httpd_handle_t handle*, **const** char **uri*)

Unregister all URI handlers with the specified uri string.

Return

- ESP_OK : On successfully deregistering all such handlers
- ESP_ERR_INVALID_ARG : Null arguments
- ESP_ERR_NOT_FOUND : No handler registered with specified uri string

Parameters

- `[in] handle`: handle to HTTPD server instance
- `[in] uri`: uri string specifying all handlers that need to be deregisterd

esp_err_t **httpd_sess_set_recv_override**(*httpd_handle_t hd*, int *sockfd*, *httpd_recv_func_t recv_func*)

Override web server’s receive function (by session FD)

This function overrides the web server’s receive function. This same function is used to read HTTP request packets.

Note This API is supposed to be called either from the context of

- an http session APIs where sockfd is a valid parameter
- a URI handler where sockfd is obtained using httpd_req_to_sockfd()

Return

- ESP_OK : On successfully registering override
- ESP_ERR_INVALID_ARG : Null arguments

Parameters

- `[in] hd`: HTTPD instance handle
- `[in] sockfd`: Session socket FD

- `[in] recv_func`: The receive function to be set for this session

esp_err_t **httpd_sess_set_send_override** (*httpd_handle_t hd*, int *sockfd*, *httpd_send_func_t send_func*)

Override web server's send function (by session FD)

This function overrides the web server's send function. This same function is used to send out any response to any HTTP request.

Note This API is supposed to be called either from the context of
- an http session APIs where sockfd is a valid parameter
- a URI handler where sockfd is obtained using httpd_req_to_sockfd()

Return
- ESP_OK : On successfully registering override
- ESP_ERR_INVALID_ARG : Null arguments

Parameters
- `[in] hd`: HTTPD instance handle
- `[in] sockfd`: Session socket FD
- `[in] send_func`: The send function to be set for this session

esp_err_t **httpd_sess_set_pending_override** (*httpd_handle_t hd*, int *sockfd*, *httpd_pending_func_t pending_func*)

Override web server's pending function (by session FD)

This function overrides the web server's pending function. This function is used to test for pending bytes in a socket.

Note This API is supposed to be called either from the context of
- an http session APIs where sockfd is a valid parameter
- a URI handler where sockfd is obtained using httpd_req_to_sockfd()

Return
- ESP_OK : On successfully registering override
- ESP_ERR_INVALID_ARG : Null arguments

Parameters
- `[in] hd`: HTTPD instance handle
- `[in] sockfd`: Session socket FD
- `[in] pending_func`: The receive function to be set for this session

int **httpd_req_to_sockfd** (*httpd_req_t* **r*)

Get the Socket Descriptor from the HTTP request.

This API will return the socket descriptor of the session for which URI handler was executed on reception of HTTP request. This is useful when user wants to call functions that require session socket fd, from within a URI handler, ie. : httpd_sess_get_ctx(), httpd_sess_trigger_close(), httpd_sess_update_lru_counter().

Note This API is supposed to be called only from the context of a URI handler where httpd_req_t* request pointer is valid.

Return
- Socket descriptor : The socket descriptor for this request
- -1 : Invalid/NULL request pointer

Parameters
- `[in] r`: The request whose socket descriptor should be found

int **httpd_req_recv** (*httpd_req_t* **r*, char **buf*, size_t *buf_len*)

API to read content data from the HTTP request.

This API will read HTTP content data from the HTTP request into provided buffer. Use content_len provided in httpd_req_t structure to know the length of data to be fetched. If content_len is too large for the buffer then user may have to make multiple calls to this function, each time fetching 'buf_len' number of bytes, while the pointer to content data is incremented internally by the same number.

Note
- This API is supposed to be called only from the context of a URI handler where httpd_req_t* request pointer is valid.

- If an error is returned, the URI handler must further return an error. This will ensure that the erroneous socket is closed and cleaned up by the web server.
- Presently Chunked Encoding is not supported

Return

- Bytes : Number of bytes read into the buffer successfully
- 0 : Buffer length parameter is zero / connection closed by peer
- HTTPD_SOCK_ERR_INVALID : Invalid arguments
- HTTPD_SOCK_ERR_TIMEOUT : Timeout/interrupted while calling socket recv()
- HTTPD_SOCK_ERR_FAIL : Unrecoverable error while calling socket recv()

Parameters

- `[in] r`: The request being responded to
- `[in] buf`: Pointer to a buffer that the data will be read into
- `[in] buf_len`: Length of the buffer

size_t **httpd_req_get_hdr_value_len**(*httpd_req_t* *r, **const** char *field)

Search for a field in request headers and return the string length of it' s value.

Note

- This API is supposed to be called only from the context of a URI handler where httpd_req_t* request pointer is valid.
- Once httpd_resp_send() API is called all request headers are purged, so request headers need be copied into separate buffers if they are required later.

Return

- Length : If field is found in the request URL
- Zero : Field not found / Invalid request / Null arguments

Parameters

- `[in] r`: The request being responded to
- `[in] field`: The header field to be searched in the request

esp_err_t **httpd_req_get_hdr_value_str**(*httpd_req_t* *r, **const** char *field, char *val, size_t val_size)

Get the value string of a field from the request headers.

Note

- This API is supposed to be called only from the context of a URI handler where httpd_req_t* request pointer is valid.
- Once httpd_resp_send() API is called all request headers are purged, so request headers need be copied into separate buffers if they are required later.
- If output size is greater than input, then the value is truncated, accompanied by truncation error as return value.
- Use httpd_req_get_hdr_value_len() to know the right buffer length

Return

- ESP_OK : Field found in the request header and value string copied
- ESP_ERR_NOT_FOUND : Key not found
- ESP_ERR_INVALID_ARG : Null arguments
- ESP_ERR_HTTPD_INVALID_REQ : Invalid HTTP request pointer
- ESP_ERR_HTTPD_RESULT_TRUNC : Value string truncated

Parameters

- `[in] r`: The request being responded to
- `[in] field`: The field to be searched in the header
- `[out] val`: Pointer to the buffer into which the value will be copied if the field is found
- `[in] val_size`: Size of the user buffer "val"

size_t **httpd_req_get_url_query_len**(*httpd_req_t* *r)

Get Query string length from the request URL.

Note This API is supposed to be called only from the context of a URI handler where httpd_req_t* request pointer is valid

Return

- Length : Query is found in the request URL
- Zero : Query not found / Null arguments / Invalid request

Parameters

- `[in] r`: The request being responded to

esp_err_t **httpd_req_get_url_query_str**(*httpd_req_t* *r, char *buf, size_t buf_len)

Get Query string from the request URL.

Note

- Presently, the user can fetch the full URL query string, but decoding will have to be performed by the user. Request headers can be read using httpd_req_get_hdr_value_str() to know the 'Content-Type' (eg. Content-Type: application/x-www-form-urlencoded) and then the appropriate decoding algorithm needs to be applied.
- This API is supposed to be called only from the context of a URI handler where httpd_req_t* request pointer is valid
- If output size is greater than input, then the value is truncated, accompanied by truncation error as return value
- Prior to calling this function, one can use httpd_req_get_url_query_len() to know the query string length beforehand and hence allocate the buffer of right size (usually query string length + 1 for null termination) for storing the query string

Return

- ESP_OK : Query is found in the request URL and copied to buffer
- ESP_ERR_NOT_FOUND : Query not found
- ESP_ERR_INVALID_ARG : Null arguments
- ESP_ERR_HTTPD_INVALID_REQ : Invalid HTTP request pointer
- ESP_ERR_HTTPD_RESULT_TRUNC : Query string truncated

Parameters

- `[in] r`: The request being responded to
- `[out] buf`: Pointer to the buffer into which the query string will be copied (if found)
- `[in] buf_len`: Length of output buffer

esp_err_t **httpd_query_key_value**(**const** char *qry, **const** char *key, char *val, size_t val_size)

Helper function to get a URL query tag from a query string of the type param1=val1&param2=val2.

Note

- The components of URL query string (keys and values) are not URLdecoded. The user must check for 'Content-Type' field in the request headers and then depending upon the specified encoding (URLencoded or otherwise) apply the appropriate decoding algorithm.
- If actual value size is greater than val_size, then the value is truncated, accompanied by truncation error as return value.

Return

- ESP_OK : Key is found in the URL query string and copied to buffer
- ESP_ERR_NOT_FOUND : Key not found
- ESP_ERR_INVALID_ARG : Null arguments
- ESP_ERR_HTTPD_RESULT_TRUNC : Value string truncated

Parameters

- `[in] qry`: Pointer to query string
- `[in] key`: The key to be searched in the query string
- `[out] val`: Pointer to the buffer into which the value will be copied if the key is found
- `[in] val_size`: Size of the user buffer "val"

bool **httpd_uri_match_wildcard**(**const** char *uri_template, **const** char *uri_to_match, size_t match_upto)

Test if a URI matches the given wildcard template.

Template may end with "?" to make the previous character optional (typically a slash), "*" for a wildcard match, and "?*" to make the previous character optional, and if present, allow anything to follow.

Example:

- * matches everything
- /foo/? matches /foo and /foo/
- /foo/* (sans the backslash) matches /foo/ and /foo/bar, but not /foo or /fo
- /foo/?* or /foo/*? (sans the backslash) matches /foo/, /foo/bar, and also /foo, but not /foox or /fo

The special characters "?" and "*" anywhere else in the template will be taken literally.

Return true if a match was found

Parameters

- `[in] uri_template`: URI template (pattern)
- `[in] uri_to_match`: URI to be matched
- `[in] match_upto`: how many characters of the URI buffer to test (there may be trailing query string etc.)

esp_err_t **httpd_resp_send** (*httpd_req_t* *r, **const** char *buf, ssize_t buf_len)

API to send a complete HTTP response.

This API will send the data as an HTTP response to the request. This assumes that you have the entire response ready in a single buffer. If you wish to send response in incremental chunks use httpd_resp_send_chunk() instead.

If no status code and content-type were set, by default this will send 200 OK status code and content type as text/html. You may call the following functions before this API to configure the response headers : httpd_resp_set_status() - for setting the HTTP status string, httpd_resp_set_type() - for setting the Content Type, httpd_resp_set_hdr() - for appending any additional field value entries in the response header

Note

- This API is supposed to be called only from the context of a URI handler where httpd_req_t* request pointer is valid.
- Once this API is called, the request has been responded to.
- No additional data can then be sent for the request.
- Once this API is called, all request headers are purged, so request headers need be copied into separate buffers if they are required later.

Return

- ESP_OK : On successfully sending the response packet
- ESP_ERR_INVALID_ARG : Null request pointer
- ESP_ERR_HTTPD_RESP_HDR : Essential headers are too large for internal buffer
- ESP_ERR_HTTPD_RESP_SEND : Error in raw send
- ESP_ERR_HTTPD_INVALID_REQ : Invalid request

Parameters

- `[in] r`: The request being responded to
- `[in] buf`: Buffer from where the content is to be fetched
- `[in] buf_len`: Length of the buffer, HTTPD_RESP_USE_STRLEN to use strlen()

esp_err_t **httpd_resp_send_chunk** (*httpd_req_t* *r, **const** char *buf, ssize_t buf_len)

API to send one HTTP chunk.

This API will send the data as an HTTP response to the request. This API will use chunked-encoding and send the response in the form of chunks. If you have the entire response contained in a single buffer, please use httpd_resp_send() instead.

If no status code and content-type were set, by default this will send 200 OK status code and content type as text/html. You may call the following functions before this API to configure the response headers httpd_resp_set_status() - for setting the HTTP status string, httpd_resp_set_type() - for setting the Content Type, httpd_resp_set_hdr() - for appending any additional field value entries in the response header

Note

- This API is supposed to be called only from the context of a URI handler where httpd_req_t* request pointer is valid.
- When you are finished sending all your chunks, you must call this function with buf_len as 0.
- Once this API is called, all request headers are purged, so request headers need be copied into separate buffers if they are required later.

Return

- ESP_OK : On successfully sending the response packet chunk
- ESP_ERR_INVALID_ARG : Null request pointer
- ESP_ERR_HTTPD_RESP_HDR : Essential headers are too large for internal buffer
- ESP_ERR_HTTPD_RESP_SEND : Error in raw send
- ESP_ERR_HTTPD_INVALID_REQ : Invalid request pointer

Parameters

- `[in]` `r`: The request being responded to
- `[in]` `buf`: Pointer to a buffer that stores the data
- `[in]` `buf_len`: Length of the buffer, HTTPD_RESP_USE_STRLEN to use strlen()

static *esp_err_t* **httpd_resp_sendstr** (*httpd_req_t* *r, **const** char *str)

API to send a complete string as HTTP response.

This API simply calls http_resp_send with buffer length set to string length assuming the buffer contains a null terminated string

Return

- ESP_OK : On successfully sending the response packet
- ESP_ERR_INVALID_ARG : Null request pointer
- ESP_ERR_HTTPD_RESP_HDR : Essential headers are too large for internal buffer
- ESP_ERR_HTTPD_RESP_SEND : Error in raw send
- ESP_ERR_HTTPD_INVALID_REQ : Invalid request

Parameters

- `[in]` `r`: The request being responded to
- `[in]` `str`: String to be sent as response body

static *esp_err_t* **httpd_resp_sendstr_chunk** (*httpd_req_t* *r, **const** char *str)

API to send a string as an HTTP response chunk.

This API simply calls http_resp_send_chunk with buffer length set to string length assuming the buffer contains a null terminated string

Return

- ESP_OK : On successfully sending the response packet
- ESP_ERR_INVALID_ARG : Null request pointer
- ESP_ERR_HTTPD_RESP_HDR : Essential headers are too large for internal buffer
- ESP_ERR_HTTPD_RESP_SEND : Error in raw send
- ESP_ERR_HTTPD_INVALID_REQ : Invalid request

Parameters

- `[in]` `r`: The request being responded to
- `[in]` `str`: String to be sent as response body (NULL to finish response packet)

esp_err_t **httpd_resp_set_status** (*httpd_req_t* *r, **const** char *status)

API to set the HTTP status code.

This API sets the status of the HTTP response to the value specified. By default, the '200 OK' response is sent as the response.

Note

- This API is supposed to be called only from the context of a URI handler where httpd_req_t* request pointer is valid.
- This API only sets the status to this value. The status isn't sent out until any of the send APIs is executed.
- Make sure that the lifetime of the status string is valid till send function is called.

Return

- ESP_OK : On success
- ESP_ERR_INVALID_ARG : Null arguments
- ESP_ERR_HTTPD_INVALID_REQ : Invalid request pointer

Parameters

- `[in]` `r`: The request being responded to
- `[in]` `status`: The HTTP status code of this response

esp_err_t **httpd_resp_set_type** (*httpd_req_t* *r, **const** char *type)

API to set the HTTP content type.

This API sets the 'Content Type' field of the response. The default content type is 'text/html'.

Note

- This API is supposed to be called only from the context of a URI handler where httpd_req_t* request pointer is valid.
- This API only sets the content type to this value. The type isn't sent out until any of the send APIs is executed.
- Make sure that the lifetime of the type string is valid till send function is called.

Return

- ESP_OK : On success
- ESP_ERR_INVALID_ARG : Null arguments
- ESP_ERR_HTTPD_INVALID_REQ : Invalid request pointer

Parameters

- `[in] r`: The request being responded to
- `[in] type`: The Content Type of the response

esp_err_t **httpd_resp_set_hdr** (*httpd_req_t* *r, **const** char *field, **const** char *value)

API to append any additional headers.

This API sets any additional header fields that need to be sent in the response.

Note

- This API is supposed to be called only from the context of a URI handler where httpd_req_t* request pointer is valid.
- The header isn't sent out until any of the send APIs is executed.
- The maximum allowed number of additional headers is limited to value of max_resp_headers in config structure.
- Make sure that the lifetime of the field value strings are valid till send function is called.

Return

- ESP_OK : On successfully appending new header
- ESP_ERR_INVALID_ARG : Null arguments
- ESP_ERR_HTTPD_RESP_HDR : Total additional headers exceed max allowed
- ESP_ERR_HTTPD_INVALID_REQ : Invalid request pointer

Parameters

- `[in] r`: The request being responded to
- `[in] field`: The field name of the HTTP header
- `[in] value`: The value of this HTTP header

esp_err_t **httpd_resp_send_err** (*httpd_req_t* *req, *httpd_err_code_t* error, **const** char *msg)

For sending out error code in response to HTTP request.

Note

- This API is supposed to be called only from the context of a URI handler where httpd_req_t* request pointer is valid.
- Once this API is called, all request headers are purged, so request headers need be copied into separate buffers if they are required later.
- If you wish to send additional data in the body of the response, please use the lower-level functions directly.

Return

- ESP_OK : On successfully sending the response packet
- ESP_ERR_INVALID_ARG : Null arguments
- ESP_ERR_HTTPD_RESP_SEND : Error in raw send
- ESP_ERR_HTTPD_INVALID_REQ : Invalid request pointer

Parameters

- `[in] req`: Pointer to the HTTP request for which the response needs to be sent
- `[in] error`: Error type to send
- `[in] msg`: Error message string (pass NULL for default message)

static *esp_err_t* **httpd_resp_send_404** (*httpd_req_t* *r)

Helper function for HTTP 404.

Send HTTP 404 message. If you wish to send additional data in the body of the response, please use the lower-level functions directly.

Note

- This API is supposed to be called only from the context of a URI handler where httpd_req_t* request pointer is valid.
- Once this API is called, all request headers are purged, so request headers need be copied into separate buffers if they are required later.

Return

- ESP_OK : On successfully sending the response packet
- ESP_ERR_INVALID_ARG : Null arguments
- ESP_ERR_HTTPD_RESP_SEND : Error in raw send
- ESP_ERR_HTTPD_INVALID_REQ : Invalid request pointer

Parameters

- `[in] r`: The request being responded to

static *esp_err_t* **httpd_resp_send_408** (*httpd_req_t* *r)

Helper function for HTTP 408.

Send HTTP 408 message. If you wish to send additional data in the body of the response, please use the lower-level functions directly.

Note

- This API is supposed to be called only from the context of a URI handler where httpd_req_t* request pointer is valid.
- Once this API is called, all request headers are purged, so request headers need be copied into separate buffers if they are required later.

Return

- ESP_OK : On successfully sending the response packet
- ESP_ERR_INVALID_ARG : Null arguments
- ESP_ERR_HTTPD_RESP_SEND : Error in raw send
- ESP_ERR_HTTPD_INVALID_REQ : Invalid request pointer

Parameters

- `[in] r`: The request being responded to

static *esp_err_t* **httpd_resp_send_500** (*httpd_req_t* *r)

Helper function for HTTP 500.

Send HTTP 500 message. If you wish to send additional data in the body of the response, please use the lower-level functions directly.

Note

- This API is supposed to be called only from the context of a URI handler where httpd_req_t* request pointer is valid.
- Once this API is called, all request headers are purged, so request headers need be copied into separate buffers if they are required later.

Return

- ESP_OK : On successfully sending the response packet
- ESP_ERR_INVALID_ARG : Null arguments
- ESP_ERR_HTTPD_RESP_SEND : Error in raw send
- ESP_ERR_HTTPD_INVALID_REQ : Invalid request pointer

Parameters

- `[in] r`: The request being responded to

int **httpd_send** (*httpd_req_t* *r, **const** char *buf, size_t buf_len)

Raw HTTP send.

Call this API if you wish to construct your custom response packet. When using this, all essential header, eg. HTTP version, Status Code, Content Type and Length, Encoding, etc. will have to be constructed manually, and HTTP delimeters (CRLF) will need to be placed correctly for separating sub-sections of the HTTP response packet.

If the send override function is set, this API will end up calling that function eventually to send data out.

Note

- This API is supposed to be called only from the context of a URI handler where httpd_req_t* request pointer is valid.

- Unless the response has the correct HTTP structure (which the user must now ensure) it is not guaranteed that it will be recognized by the client. For most cases, you wouldn't have to call this API, but you would rather use either of : httpd_resp_send(), httpd_resp_send_chunk()

Return

- Bytes : Number of bytes that were sent successfully
- HTTPD_SOCK_ERR_INVALID : Invalid arguments
- HTTPD_SOCK_ERR_TIMEOUT : Timeout/interrupted while calling socket send()
- HTTPD_SOCK_ERR_FAIL : Unrecoverable error while calling socket send()

Parameters

- `[in] r`: The request being responded to
- `[in] buf`: Buffer from where the fully constructed packet is to be read
- `[in] buf_len`: Length of the buffer

int **`httpd_socket_send`**(*httpd_handle_t hd*, int *sockfd*, **`const`** char **buf*, size_t *buf_len*, int *flags*)

A low level API to send data on a given socket

This internally calls the default send function, or the function registered by httpd_sess_set_send_override().

Note This API is not recommended to be used in any request handler. Use this only for advanced use cases, wherein some asynchronous data is to be sent over a socket.

Return

- Bytes : The number of bytes sent successfully
- HTTPD_SOCK_ERR_INVALID : Invalid arguments
- HTTPD_SOCK_ERR_TIMEOUT : Timeout/interrupted while calling socket send()
- HTTPD_SOCK_ERR_FAIL : Unrecoverable error while calling socket send()

Parameters

- `[in] hd`: server instance
- `[in] sockfd`: session socket file descriptor
- `[in] buf`: buffer with bytes to send
- `[in] buf_len`: data size
- `[in] flags`: flags for the send() function

int **`httpd_socket_recv`**(*httpd_handle_t hd*, int *sockfd*, char **buf*, size_t *buf_len*, int *flags*)

A low level API to receive data from a given socket

This internally calls the default recv function, or the function registered by httpd_sess_set_recv_override().

Note This API is not recommended to be used in any request handler. Use this only for advanced use cases, wherein some asynchronous communication is required.

Return

- Bytes : The number of bytes received successfully
- 0 : Buffer length parameter is zero / connection closed by peer
- HTTPD_SOCK_ERR_INVALID : Invalid arguments
- HTTPD_SOCK_ERR_TIMEOUT : Timeout/interrupted while calling socket recv()
- HTTPD_SOCK_ERR_FAIL : Unrecoverable error while calling socket recv()

Parameters

- `[in] hd`: server instance
- `[in] sockfd`: session socket file descriptor
- `[in] buf`: buffer with bytes to send
- `[in] buf_len`: data size
- `[in] flags`: flags for the send() function

esp_err_t **`httpd_register_err_handler`**(*httpd_handle_t handle*, *httpd_err_code_t error*, *httpd_err_handler_func_t handler_fn*)

Function for registering HTTP error handlers.

This function maps a handler function to any supported error code given by `httpd_err_code_t`. See prototype `httpd_err_handler_func_t` above for details.

Return

- ESP_OK : handler registered successfully
- ESP_ERR_INVALID_ARG : invalid error code or server handle

Parameters

- `[in] handle`: HTTP server handle
- `[in] error`: Error type
- `[in] handler_fn`: User implemented handler function (Pass NULL to unset any previously set handler)

esp_err_t **httpd_start** (*httpd_handle_t *handle*, **const** *httpd_config_t *config*)

Starts the web server.

Create an instance of HTTP server and allocate memory/resources for it depending upon the specified configuration.

Example usage:

```
//Function for starting the webserver
httpd_handle_t start_webserver(void)
{
    // Generate default configuration
    httpd_config_t config = HTTPD_DEFAULT_CONFIG();

    // Empty handle to http_server
    httpd_handle_t server = NULL;

    // Start the httpd server
    if (httpd_start(&server, &config) == ESP_OK) {
        // Register URI handlers
        httpd_register_uri_handler(server, &uri_get);
        httpd_register_uri_handler(server, &uri_post);
    }
    // If server failed to start, handle will be NULL
    return server;
}
```

Return

- ESP_OK : Instance created successfully
- ESP_ERR_INVALID_ARG : Null argument(s)
- ESP_ERR_HTTPD_ALLOC_MEM : Failed to allocate memory for instance
- ESP_ERR_HTTPD_TASK : Failed to launch server task

Parameters

- `[in] config`: Configuration for new instance of the server
- `[out] handle`: Handle to newly created instance of the server. NULL on error

esp_err_t **httpd_stop** (*httpd_handle_t handle*)

Stops the web server.

Deallocates memory/resources used by an HTTP server instance and deletes it. Once deleted the handle can no longer be used for accessing the instance.

Example usage:

```
// Function for stopping the webserver
void stop_webserver(httpd_handle_t server)
{
    // Ensure handle is non NULL
    if (server != NULL) {
        // Stop the httpd server
        httpd_stop(server);
    }
}
```

Return

- ESP_OK : Server stopped successfully
- ESP_ERR_INVALID_ARG : Handle argument is Null

Parameters

- `[in] handle`: Handle to server returned by httpd_start

esp_err_t **httpd_queue_work** (*httpd_handle_t handle*, *httpd_work_fn_t work*, void **arg*)

Queue execution of a function in HTTPD's context.

This API queues a work function for asynchronous execution

Note Some protocols require that the web server generate some asynchronous data and send it to the persistently opened connection. This facility is for use by such protocols.

Return

- ESP_OK : On successfully queueing the work
- ESP_FAIL : Failure in ctrl socket
- ESP_ERR_INVALID_ARG : Null arguments

Parameters

- `[in] handle`: Handle to server returned by httpd_start
- `[in] work`: Pointer to the function to be executed in the HTTPD's context
- `[in] arg`: Pointer to the arguments that should be passed to this function

void ***httpd_sess_get_ctx** (*httpd_handle_t handle*, int *sockfd*)

Get session context from socket descriptor.

Typically if a session context is created, it is available to URI handlers through the httpd_req_t structure. But, there are cases where the web server's send/receive functions may require the context (for example, for accessing keying information etc). Since the send/receive function only have the socket descriptor at their disposal, this API provides them with a way to retrieve the session context.

Return

- void* : Pointer to the context associated with this session
- NULL : Empty context / Invalid handle / Invalid socket fd

Parameters

- `[in] handle`: Handle to server returned by httpd_start
- `[in] sockfd`: The socket descriptor for which the context should be extracted.

void **httpd_sess_set_ctx** (*httpd_handle_t handle*, int *sockfd*, void **ctx*, *httpd_free_ctx_fn_t free_fn*)

Set session context by socket descriptor.

Parameters

- `[in] handle`: Handle to server returned by httpd_start
- `[in] sockfd`: The socket descriptor for which the context should be extracted.
- `[in] ctx`: Context object to assign to the session
- `[in] free_fn`: Function that should be called to free the context

void ***httpd_sess_get_transport_ctx** (*httpd_handle_t handle*, int *sockfd*)

Get session 'transport' context by socket descriptor.

This context is used by the send/receive functions, for example to manage SSL context.

See httpd_sess_get_ctx()

Return

- void* : Pointer to the transport context associated with this session
- NULL : Empty context / Invalid handle / Invalid socket fd

Parameters

- `[in] handle`: Handle to server returned by httpd_start
- `[in] sockfd`: The socket descriptor for which the context should be extracted.

void **httpd_sess_set_transport_ctx** (*httpd_handle_t handle*, int *sockfd*, void **ctx*, *httpd_free_ctx_fn_t free_fn*)

Set session 'transport' context by socket descriptor.

See httpd_sess_set_ctx()

Parameters

- `[in] handle`: Handle to server returned by httpd_start
- `[in] sockfd`: The socket descriptor for which the context should be extracted.
- `[in] ctx`: Transport context object to assign to the session

- `[in] free_fn`: Function that should be called to free the transport context

void ***httpd_get_global_user_ctx** (*httpd_handle_t handle*)

Get HTTPD global user context (it was set in the server config struct)

Return global user context

Parameters

- `[in] handle`: Handle to server returned by httpd_start

void ***httpd_get_global_transport_ctx** (*httpd_handle_t handle*)

Get HTTPD global transport context (it was set in the server config struct)

Return global transport context

Parameters

- `[in] handle`: Handle to server returned by httpd_start

esp_err_t **httpd_sess_trigger_close** (*httpd_handle_t handle*, int *sockfd*)

Trigger an httpd session close externally.

Note Calling this API is only required in special circumstances wherein some application requires to close an httpd client session asynchronously.

Return

- ESP_OK : On successfully initiating closure
- ESP_FAIL : Failure to queue work
- ESP_ERR_NOT_FOUND : Socket fd not found
- ESP_ERR_INVALID_ARG : Null arguments

Parameters

- `[in] handle`: Handle to server returned by httpd_start
- `[in] sockfd`: The socket descriptor of the session to be closed

esp_err_t **httpd_sess_update_lru_counter** (*httpd_handle_t handle*, int *sockfd*)

Update LRU counter for a given socket.

LRU Counters are internally associated with each session to monitor how recently a session exchanged traffic. When LRU purge is enabled, if a client is requesting for connection but maximum number of sockets/sessions is reached, then the session having the earliest LRU counter is closed automatically.

Updating the LRU counter manually prevents the socket from being purged due to the Least Recently Used (LRU) logic, even though it might not have received traffic for some time. This is useful when all open sockets/session are frequently exchanging traffic but the user specifically wants one of the sessions to be kept open, irrespective of when it last exchanged a packet.

Note Calling this API is only necessary if the LRU Purge Enable option is enabled.

Return

- ESP_OK : Socket found and LRU counter updated
- ESP_ERR_NOT_FOUND : Socket not found
- ESP_ERR_INVALID_ARG : Null arguments

Parameters

- `[in] handle`: Handle to server returned by httpd_start
- `[in] sockfd`: The socket descriptor of the session for which LRU counter is to be updated

esp_err_t **httpd_get_client_list** (*httpd_handle_t handle*, size_t **fds*, int **client_fds*)

Returns list of current socket descriptors of active sessions.

Return

- ESP_OK : Successfully retrieved session list
- ESP_ERR_INVALID_ARG : Wrong arguments or list is longer than allocated

Parameters

- `[in] handle`: Handle to server returned by httpd_start
- `[inout] fds`: In: Number of fds allocated in the supplied structure client_fds Out: Number of valid client fds returned in client_fds,
- `[out] client_fds`: Array of client fds

Structures

struct httpd_config

HTTP Server Configuration Structure.

Note Use HTTPD_DEFAULT_CONFIG() to initialize the configuration to a default value and then modify only those fields that are specifically determined by the use case.

Public Members

unsigned **task_priority**
Priority of FreeRTOS task which runs the server

size_t **stack_size**
The maximum stack size allowed for the server task

BaseType_t **core_id**
The core the HTTP server task will run on

uint16_t **server_port**
TCP Port number for receiving and transmitting HTTP traffic

uint16_t **ctrl_port**
UDP Port number for asynchronously exchanging control signals between various components of the server

uint16_t **max_open_sockets**
Max number of sockets/clients connected at any time

uint16_t **max_uri_handlers**
Maximum allowed uri handlers

uint16_t **max_resp_headers**
Maximum allowed additional headers in HTTP response

uint16_t **backlog_conn**
Number of backlog connections

bool **lru_purge_enable**
Purge "Least Recently Used" connection

uint16_t **recv_wait_timeout**
Timeout for recv function (in seconds)

uint16_t **send_wait_timeout**
Timeout for send function (in seconds)

void ***global_user_ctx**
Global user context.

This field can be used to store arbitrary user data within the server context. The value can be retrieved using the server handle, available e.g. in the httpd_req_t struct.

When shutting down, the server frees up the user context by calling free() on the global_user_ctx field. If you wish to use a custom function for freeing the global user context, please specify that here.

httpd_free_ctx_fn_t **global_user_ctx_free_fn**
Free function for global user context

void ***global_transport_ctx**
Global transport context.

Similar to global_user_ctx, but used for session encoding or encryption (e.g. to hold the SSL context). It will be freed using free(), unless global_transport_ctx_free_fn is specified.

httpd_free_ctx_fn_t **global_transport_ctx_free_fn**
Free function for global transport context

httpd_open_func_t **open_fn**
Custom session opening callback.

Called on a new session socket just after accept(), but before reading any data.

This is an opportunity to set up e.g. SSL encryption using global_transport_ctx and the send/recv/pending session overrides.

If a context needs to be maintained between these functions, store it in the session using httpd_sess_set_transport_ctx() and retrieve it later with httpd_sess_get_transport_ctx()

Returning a value other than ESP_OK will immediately close the new socket.

httpd_close_func_t **close_fn**
Custom session closing callback.

Called when a session is deleted, before freeing user and transport contexts and before closing the socket. This is a place for custom de-init code common to all sockets.

Set the user or transport context to NULL if it was freed here, so the server does not try to free it again.

This function is run for all terminated sessions, including sessions where the socket was closed by the network stack - that is, the file descriptor may not be valid anymore.

httpd_uri_match_func_t **uri_match_fn**
URI matcher function.

Called when searching for a matching URI: 1) whose request handler is to be executed right after an HTTP request is successfully parsed 2) in order to prevent duplication while registering a new URI handler using `httpd_register_uri_handler()`

Available options are: 1) NULL : Internally do basic matching using `strncmp()` 2) `httpd_uri_match_wildcard()` : URI wildcard matcher

Users can implement their own matching functions (See description of the `httpd_uri_match_func_t` function prototype)

struct httpd_req
HTTP Request Data Structure.

Public Members

httpd_handle_t **handle**
Handle to server instance

int **method**
The type of HTTP request, -1 if unsupported method

const char **uri**[**HTTPD_MAX_URI_LEN** + 1]
The URI of this request (1 byte extra for null termination)

size_t **content_len**
Length of the request body

void ***aux**
Internally used members

void ***user_ctx**
User context pointer passed during URI registration.

void ***sess_ctx**
Session Context Pointer

A session context. Contexts are maintained across 'sessions' for a given open TCP connection. One session could have multiple request responses. The web server will ensure that the context persists across all these request and responses.

By default, this is NULL. URI Handlers can set this to any meaningful value.

If the underlying socket gets closed, and this pointer is non-NULL, the web server will free up the context by calling free(), unless free_ctx function is set.

httpd_free_ctx_fn_t **free_ctx**
Pointer to free context hook

Function to free session context

If the web server ' s socket closes, it frees up the session context by calling free() on the sess_ctx member. If you wish to use a custom function for freeing the session context, please specify that here.

bool **ignore_sess_ctx_changes**
Flag indicating if Session Context changes should be ignored

By default, if you change the sess_ctx in some URI handler, the http server will internally free the earlier context (if non NULL), after the URI handler returns. If you want to manage the allocation/reallocation/freeing of sess_ctx yourself, set this flag to true, so that the server will not perform any checks on it. The context will be cleared by the server (by calling free_ctx or free()) only if the socket gets closed.

struct httpd_uri
Structure for URI handler.

Public Members

const char ***uri**
The URI to handle

httpd_method_t **method**
Method supported by the URI

esp_err_t (***handler**) (*httpd_req_t* *r)
Handler to call for supported request method. This must return ESP_OK, or else the underlying socket will be closed.

void ***user_ctx**
Pointer to user context data which will be available to handler

Macros

HTTPD_MAX_REQ_HDR_LEN
HTTPD_MAX_URI_LEN

HTTPD_SOCK_ERR_FAIL

HTTPD_SOCK_ERR_INVALID

HTTPD_SOCK_ERR_TIMEOUT

HTTPD_200
HTTP Response 200

HTTPD_204
HTTP Response 204

HTTPD_207
HTTP Response 207

HTTPD_400
HTTP Response 400

HTTPD_404
HTTP Response 404

HTTPD_408
HTTP Response 408

HTTPD_500
HTTP Response 500

HTTPD_TYPE_JSON
HTTP Content type JSON

HTTPD_TYPE_TEXT
HTTP Content type text/HTML

HTTPD_TYPE_OCTET
HTTP Content type octext-stream

HTTPD_DEFAULT_CONFIG()

ESP_ERR_HTTPD_BASE
Starting number of HTTPD error codes

ESP_ERR_HTTPD_HANDLERS_FULL
All slots for registering URI handlers have been consumed

ESP_ERR_HTTPD_HANDLER_EXISTS
URI handler with same method and target URI already registered

ESP_ERR_HTTPD_INVALID_REQ
Invalid request pointer

ESP_ERR_HTTPD_RESULT_TRUNC
Result string truncated

ESP_ERR_HTTPD_RESP_HDR
Response header field larger than supported

ESP_ERR_HTTPD_RESP_SEND
Error occured while sending response packet

ESP_ERR_HTTPD_ALLOC_MEM
Failed to dynamically allocate memory for resource

ESP_ERR_HTTPD_TASK
Failed to launch server task/thread

HTTPD_RESP_USE_STRLEN

Type Definitions

typedef struct *httpd_req* **httpd_req_t**
HTTP Request Data Structure.

typedef struct *httpd_uri* **httpd_uri_t**
Structure for URI handler.

typedef int (***httpd_send_func_t**)(*httpd_handle_t* hd, int sockfd, **const** char *buf, size_t buf_len, int flags)
Prototype for HTTPDs low-level send function.

Note User specified send function must handle errors internally, depending upon the set value of errno, and return specific HTTPD_SOCK_ERR_ codes, which will eventually be conveyed as return value of httpd_send() function

Return
- Bytes : The number of bytes sent successfully
- HTTPD_SOCK_ERR_INVALID : Invalid arguments
- HTTPD_SOCK_ERR_TIMEOUT : Timeout/interrupted while calling socket send()
- HTTPD_SOCK_ERR_FAIL : Unrecoverable error while calling socket send()

Parameters
- `[in] hd`: server instance
- `[in] sockfd`: session socket file descriptor
- `[in] buf`: buffer with bytes to send
- `[in] buf_len`: data size

- `[in] flags`: flags for the send() function

typedef int (***httpd_recv_func_t**) (*httpd_handle_t* hd, int sockfd, char *buf, size_t buf_len, int flags)

Prototype for HTTPDs low-level recv function.

Note User specified recv function must handle errors internally, depending upon the set value of errno, and return specific HTTPD_SOCK_ERR_ codes, which will eventually be conveyed as return value of httpd_req_recv() function

Return

- Bytes : The number of bytes received successfully
- 0 : Buffer length parameter is zero / connection closed by peer
- HTTPD_SOCK_ERR_INVALID : Invalid arguments
- HTTPD_SOCK_ERR_TIMEOUT : Timeout/interrupted while calling socket recv()
- HTTPD_SOCK_ERR_FAIL : Unrecoverable error while calling socket recv()

Parameters

- `[in] hd`: server instance
- `[in] sockfd`: session socket file descriptor
- `[in] buf`: buffer with bytes to send
- `[in] buf_len`: data size
- `[in] flags`: flags for the send() function

typedef int (***httpd_pending_func_t**) (*httpd_handle_t* hd, int sockfd)

Prototype for HTTPDs low-level "get pending bytes" function.

Note User specified pending function must handle errors internally, depending upon the set value of errno, and return specific HTTPD_SOCK_ERR_ codes, which will be handled accordingly in the server task.

Return

- Bytes : The number of bytes waiting to be received
- HTTPD_SOCK_ERR_INVALID : Invalid arguments
- HTTPD_SOCK_ERR_TIMEOUT : Timeout/interrupted while calling socket pending()
- HTTPD_SOCK_ERR_FAIL : Unrecoverable error while calling socket pending()

Parameters

- `[in] hd`: server instance
- `[in] sockfd`: session socket file descriptor

typedef *esp_err_t* (***httpd_err_handler_func_t**) (*httpd_req_t* *req, *httpd_err_code_t* error)

Function prototype for HTTP error handling.

This function is executed upon HTTP errors generated during internal processing of an HTTP request. This is used to override the default behavior on error, which is to send HTTP error response and close the underlying socket.

Note

- If implemented, the server will not automatically send out HTTP error response codes, therefore, httpd_resp_send_err() must be invoked inside this function if user wishes to generate HTTP error responses.
- When invoked, the validity of `uri`, `method`, `content_len` and `user_ctx` fields of the httpd_req_t parameter is not guaranteed as the HTTP request may be partially received/parsed.
- The function must return ESP_OK if underlying socket needs to be kept open. Any other value will ensure that the socket is closed. The return value is ignored when error is of type `HTTPD_500_INTERNAL_SERVER_ERROR` and the socket closed anyway.

Return

- ESP_OK : error handled successful
- ESP_FAIL : failure indicates that the underlying socket needs to be closed

Parameters

- `[in] req`: HTTP request for which the error needs to be handled
- `[in] error`: Error type

typedef void ***httpd_handle_t**

HTTP Server Instance Handle.

Every instance of the server will have a unique handle.

typedef enum http_method **httpd_method_t**
HTTP Method Type wrapper over "enum http_method" available in "http_parser" library.

typedef void (***httpd_free_ctx_fn_t**)(void *ctx)
Prototype for freeing context data (if any)

Parameters
- `[in] ctx`: object to free

typedef *esp_err_t* (***httpd_open_func_t**)(*httpd_handle_t* hd, int sockfd)
Function prototype for opening a session.

Called immediately after the socket was opened to set up the send/recv functions and other parameters of the socket.

Return
- ESP_OK : On success
- Any value other than ESP_OK will signal the server to close the socket immediately

Parameters
- `[in] hd`: server instance
- `[in] sockfd`: session socket file descriptor

typedef void (***httpd_close_func_t**)(*httpd_handle_t* hd, int sockfd)
Function prototype for closing a session.

Note It's possible that the socket descriptor is invalid at this point, the function is called for all terminated sessions. Ensure proper handling of return codes.

Parameters
- `[in] hd`: server instance
- `[in] sockfd`: session socket file descriptor

typedef bool (***httpd_uri_match_func_t**)(**const** char *reference_uri, **const** char *uri_to_match, size_t match_upto)
Function prototype for URI matching.

Return true on match

Parameters
- `[in] reference_uri`: URI/template with respect to which the other URI is matched
- `[in] uri_to_match`: URI/template being matched to the reference URI/template
- `[in] match_upto`: For specifying the actual length of `uri_to_match` up to which the matching algorithm is to be applied (The maximum value is `strlen(uri_to_match)`, independent of the length of `reference_uri`)

typedef struct *httpd_config* **httpd_config_t**
HTTP Server Configuration Structure.

Note Use HTTPD_DEFAULT_CONFIG() to initialize the configuration to a default value and then modify only those fields that are specifically determined by the use case.

typedef void (***httpd_work_fn_t**)(void *arg)
Prototype of the HTTPD work function Please refer to httpd_queue_work() for more details.

Parameters
- `[in] arg`: The arguments for this work function

Enumerations

enum httpd_err_code_t
Error codes sent as HTTP response in case of errors encountered during processing of an HTTP request.

Values:

HTTPD_500_INTERNAL_SERVER_ERROR = 0

HTTPD_501_METHOD_NOT_IMPLEMENTED

HTTPD_505_VERSION_NOT_SUPPORTED

HTTPD_400_BAD_REQUEST

HTTPD_401_UNAUTHORIZED

HTTPD_403_FORBIDDEN

HTTPD_404_NOT_FOUND

HTTPD_405_METHOD_NOT_ALLOWED

HTTPD_408_REQ_TIMEOUT

HTTPD_411_LENGTH_REQUIRED

HTTPD_414_URI_TOO_LONG

HTTPD_431_REQ_HDR_FIELDS_TOO_LARGE

HTTPD_ERR_CODE_MAX

2.4.6 HTTPS server

Overview

This component is built on top of *esp_http_server*. The HTTPS server takes advantage of hooks and function overrides in the regular HTTP server to provide encryption using OpenSSL.

All documentation for *esp_http_server* applies also to a server you create this way.

Used APIs

The following API of *esp_http_server* should not be used with *esp_https_server*, as they are used internally to handle secure sessions and to maintain internal state:

- "send", "receive" and "pending" function overrides - secure socket handling
  - *httpd_sess_set_send_override()*
  - *httpd_sess_set_recv_override()*
  - *httpd_sess_set_pending_override()*
- "transport context" - both global and session
  - *httpd_sess_get_transport_ctx()* - returns SSL used for the session
  - *httpd_sess_set_transport_ctx()*
  - *httpd_get_global_transport_ctx()* - returns the shared SSL context
  - `httpd_config_t.global_transport_ctx`
  - `httpd_config_t.global_transport_ctx_free_fn`
  - `httpd_config_t.open_fn` - used to set up secure sockets

Everything else can be used without limitations.

Usage

Please see the example protocols/https_server to learn how to set up a secure server.

Basically all you need is to generate a certificate, embed it in the firmware, and provide its pointers and lengths to the start function via the init struct.

The server can be started with or without SSL by changing a flag in the init struct - `httpd_ssl_config.transport_mode`. This could be used e.g. for testing or in trusted environments where you prefer speed over security.

Performance

The initial session setup can take about two seconds, or more with slower clock speeds or more verbose logging. Subsequent requests through the open secure socket are much faster (down to under 100 ms).

API Reference

Header File

- esp_https_server/include/esp_https_server.h

Functions

esp_err_t **httpd_ssl_start** (*httpd_handle_t *handle*, *httpd_ssl_config_t *config*)

Create a SSL capable HTTP server (secure mode may be disabled in config)

Return success

Parameters

- `[inout] config`: - server config, must not be const. Does not have to stay valid after calling this function.
- `[out] handle`: - storage for the server handle, must be a valid pointer

void **httpd_ssl_stop** (*httpd_handle_t handle*)

Stop the server. Blocks until the server is shut down.

Parameters

- `[in] handle`:

Structures

struct httpd_ssl_config

HTTPS server config struct

Please use HTTPD_SSL_CONFIG_DEFAULT() to initialize it.

Public Members

httpd_config_t **httpd**

Underlying HTTPD server config

Parameters like task stack size and priority can be adjusted here.

const uint8_t ***cacert_pem**

CA certificate (here it is treated as server cert) Todo: Fix this change in release/v5.0 as it would be a breaking change i.e. Rename the nomenclature of variables holding different certs in https_server component as well as example 1)The cacert variable should hold the CA which is used to authenticate clients (should inherit current role of client_verify_cert_pem var) 2)There should be another variable servercert which whould hold servers own certificate (should inherit current role of cacert var)

size_t **cacert_len**

CA certificate byte length

const uint8_t ***client_verify_cert_pem**

Client verify authority certificate (CA used to sign clients, or client cert itself

size_t **client_verify_cert_len**

Client verify authority cert len

const uint8_t ***prvtkey_pem**

Private key

size_t **prvtkey_len**

Private key byte length

httpd_ssl_transport_mode_t **transport_mode**
Transport Mode (default secure)

uint16_t **port_secure**
Port used when transport mode is secure (default 443)

uint16_t **port_insecure**
Port used when transport mode is insecure (default 80)

Macros

HTTPD_SSL_CONFIG_DEFAULT()
Default config struct init

(http_server default config had to be copied for customization)

Notes:

- port is set when starting the server, according to 'transport_mode'
- one socket uses ~ 40kB RAM with SSL, we reduce the default socket count to 4
- SSL sockets are usually long-lived, closing LRU prevents pool exhaustion DOS
- Stack size may need adjustments depending on the user application

Type Definitions

typedef struct *httpd_ssl_config* **httpd_ssl_config_t**

Enumerations

enum httpd_ssl_transport_mode_t
Values:

HTTPD_SSL_TRANSPORT_SECURE

HTTPD_SSL_TRANSPORT_INSECURE

2.4.7 ICMP Echo

Overview

ICMP (Internet Control Message Protocol) is used for diagnostic or control purposes or generated in response to errors in IP operations. The common network util `ping` is implemented based on the ICMP packets with the type field value of 0, also called `Echo Reply`.

During a ping session, the source host firstly sends out an ICMP echo request packet and wait for an ICMP echo reply with specific times. In this way, it also measures the round-trip time for the messages. After receiving a valid ICMP echo reply, the source host will generate statistics about the IP link layer (e.g. packet loss, elapsed time, etc).

It is common that IoT device needs to check whether a remote server is alive or not. The device should show the warnings to users when it got offline. It can be achieved by creating a ping session and sending/parsing ICMP echo packets periodically.

To make this internal procedure much easier for users, ESP-IDF provides some out-of-box APIs.

Create a new ping session To create a ping session, you need to fill in the `esp_ping_config_t` configuration structure firstly, specifying target IP address, interval times, and etc. Optionally, you can also register some callback functions with the *esp_ping_callbacks_t*' structure.

Example method to create a new ping session and register callbacks:

```
static void test_on_ping_success(esp_ping_handle_t hdl, void *args)
{
    // optionally, get callback arguments
    // const char* str = (const char*) args;
    // printf("%s\r\n", str); // "foo"
    uint8_t ttl;
    uint16_t seqno;
    uint32_t elapsed_time, recv_len;
    ip_addr_t target_addr;
    esp_ping_get_profile(hdl, ESP_PING_PROF_SEQNO, &seqno, sizeof(seqno));
    esp_ping_get_profile(hdl, ESP_PING_PROF_TTL, &ttl, sizeof(ttl));
    esp_ping_get_profile(hdl, ESP_PING_PROF_IPADDR, &target_addr, sizeof(target_
↪addr));
    esp_ping_get_profile(hdl, ESP_PING_PROF_SIZE, &recv_len, sizeof(recv_len));
    esp_ping_get_profile(hdl, ESP_PING_PROF_TIMEGAP, &elapsed_time, sizeof(elapsed_
↪time));
    printf("%d bytes from %s icmp_seq=%d ttl=%d time=%d ms\n",
           recv_len, inet_ntoa(target_addr.u_addr.ip4), seqno, ttl, elapsed_time);
}

static void test_on_ping_timeout(esp_ping_handle_t hdl, void *args)
{
    uint16_t seqno;
    ip_addr_t target_addr;
    esp_ping_get_profile(hdl, ESP_PING_PROF_SEQNO, &seqno, sizeof(seqno));
    esp_ping_get_profile(hdl, ESP_PING_PROF_IPADDR, &target_addr, sizeof(target_
↪addr));
    printf("From %s icmp_seq=%d timeout\n", inet_ntoa(target_addr.u_addr.ip4),␣
↪seqno);
}

static void test_on_ping_end(esp_ping_handle_t hdl, void *args)
{
    uint32_t transmitted;
    uint32_t received;
    uint32_t total_time_ms;

    esp_ping_get_profile(hdl, ESP_PING_PROF_REQUEST, &transmitted,␣
↪sizeof(transmitted));
    esp_ping_get_profile(hdl, ESP_PING_PROF_REPLY, &received, sizeof(received));
    esp_ping_get_profile(hdl, ESP_PING_PROF_DURATION, &total_time_ms, sizeof(total_
↪time_ms));
    printf("%d packets transmitted, %d received, time %dms\n", transmitted,␣
↪received, total_time_ms);
}

void initialize_ping()
{
    /* convert URL to IP address */
    ip_addr_t target_addr;
    struct addrinfo hint;
    struct addrinfo *res = NULL;
    memset(&hint, 0, sizeof(hint));
    memset(&target_addr, 0, sizeof(target_addr));
    getaddrinfo("www.espressif.com", NULL, &hint, &res);
    struct in_addr addr4 = ((struct sockaddr_in *) (res->ai_addr))->sin_addr;
    inet_addr_to_ip4addr(ip_2_ip4(&target_addr), &addr4);
    freeaddrinfo(res);

    esp_ping_config_t ping_config = ESP_PING_DEFAULT_CONFIG();
    ping_config.target_addr = target_addr;          // target IP address
    ping_config.count = ESP_PING_COUNT_INFINITE;    // ping in infinite mode, esp_
↪ping_stop can stop it
```

(下页继续)

(续上页)

```
    /* set callback functions */
    esp_ping_callbacks_t cbs;
    cbs.on_ping_success = test_on_ping_success;
    cbs.on_ping_timeout = test_on_ping_timeout;
    cbs.on_ping_end = test_on_ping_end;
    cbs.cb_args = "foo";  // arguments that will feed to all callback functions,␣
↪can be NULL
    cbs.cb_args = eth_event_group;

    esp_ping_handle_t ping;
    esp_ping_new_session(&ping_config, &cbs, &ping);
}
```

Start and Stop ping session You can start and stop ping session with the handle returned by `esp_ping_new_session`. Note that, the ping session won't start automatically after creation. If the ping session is stopped, and restart again, the sequence number in ICMP packets will recount from zero again.

Delete a ping session If a ping session won't be used any more, you can delete it with `esp_ping_delete_session`. Please make sure the ping session is in stop state (i.e. you have called `esp_ping_stop` before or the ping session has finished all the procedures) when you call this function.

Get runtime statistics As the example code above, you can call `esp_ping_get_profile` to get different runtime statistics of ping session in the callback function.

Application Example

ICMP echo example: protocols/icmp_echo

API Reference

Header File

- lwip/include/apps/ping/ping_sock.h

Functions

esp_err_t **esp_ping_new_session**(**const** *esp_ping_config_t* *config, **const** *esp_ping_callbacks_t* *cbs, *esp_ping_handle_t* *hdl_out)

Create a ping session.

Return

- ESP_ERR_INVALID_ARG: invalid parameters (e.g. configuration is null, etc)
- ESP_ERR_NO_MEM: out of memory
- ESP_FAIL: other internal error (e.g. socket error)
- ESP_OK: create ping session successfully, user can take the ping handle to do follow-on jobs

Parameters

- `config`: ping configuration
- `cbs`: a bunch of callback functions invoked by internal ping task
- `hdl_out`: handle of ping session

esp_err_t **esp_ping_delete_session**(*esp_ping_handle_t hdl*)

Delete a ping session.

Return

- ESP_ERR_INVALID_ARG: invalid parameters (e.g. ping handle is null, etc)
- ESP_OK: delete ping session successfully

Parameters

- `hdl`: handle of ping session

esp_err_t **esp_ping_start**(*esp_ping_handle_t hdl*)

Start the ping session.

Return

- ESP_ERR_INVALID_ARG: invalid parameters (e.g. ping handle is null, etc)
- ESP_OK: start ping session successfully

Parameters

- `hdl`: handle of ping session

esp_err_t **esp_ping_stop**(*esp_ping_handle_t hdl*)

Stop the ping session.

Return

- ESP_ERR_INVALID_ARG: invalid parameters (e.g. ping handle is null, etc)
- ESP_OK: stop ping session successfully

Parameters

- `hdl`: handle of ping session

esp_err_t **esp_ping_get_profile**(*esp_ping_handle_t hdl*, *esp_ping_profile_t profile*, void **data*, uint32_t *size*)

Get runtime profile of ping session.

Return

- ESP_ERR_INVALID_ARG: invalid parameters (e.g. ping handle is null, etc)
- ESP_ERR_INVALID_SIZE: the actual profile data size doesn't match the "size" parameter
- ESP_OK: get profile successfully

Parameters

- `hdl`: handle of ping session
- `profile`: type of profile
- `data`: profile data
- `size`: profile data size

Structures

struct esp_ping_callbacks_t

Type of "ping" callback functions.

Public Members

void ***cb_args**

arguments for callback functions

void (***on_ping_success**)(*esp_ping_handle_t* hdl, void *args)

Invoked by internal ping thread when received ICMP echo reply packet.

void (***on_ping_timeout**)(*esp_ping_handle_t* hdl, void *args)

Invoked by internal ping thread when receive ICMP echo reply packet timeout.

void (***on_ping_end**)(*esp_ping_handle_t* hdl, void *args)

Invoked by internal ping thread when a ping session is finished.

struct esp_ping_config_t

Type of "ping" configuration.

Public Members

uint32_t **count**

A "ping" session contains count procedures

uint32_t **interval_ms**
Milliseconds between each ping procedure

uint32_t **timeout_ms**
Timeout value (in milliseconds) of each ping procedure

uint32_t **data_size**
Size of the data next to ICMP packet header

int **tos**
Type of Service, a field specified in the IP header

int **ttl**
Time to Live,a field specified in the IP header

ip_addr_t **target_addr**
Target IP address, either IPv4 or IPv6

uint32_t **task_stack_size**
Stack size of internal ping task

uint32_t **task_prio**
Priority of internal ping task

uint32_t **interface**
Netif index, interface=0 means NETIF_NO_INDEX

Macros

ESP_PING_DEFAULT_CONFIG()
Default ping configuration.

ESP_PING_COUNT_INFINITE
Set ping count to zero will ping target infinitely

Type Definitions

typedef void ***esp_ping_handle_t**
Type of "ping" session handle.

Enumerations

enum esp_ping_profile_t
Profile of ping session.

Values:

ESP_PING_PROF_SEQNO
Sequence number of a ping procedure

ESP_PING_PROF_TOS
Type of service of a ping procedure

ESP_PING_PROF_TTL
Time to live of a ping procedure

ESP_PING_PROF_REQUEST
Number of request packets sent out

ESP_PING_PROF_REPLY
Number of reply packets received

ESP_PING_PROF_IPADDR
IP address of replied target

ESP_PING_PROF_SIZE
Size of received packet

ESP_PING_PROF_TIMEGAP
Elapsed time between request and reply packet

ESP_PING_PROF_DURATION
Elapsed time of the whole ping session

2.4.8 ASIO port

Overview

Asio is a cross-platform C++ library, see https://think-async.com. It provides a consistent asynchronous model using a modern C++ approach.

ASIO documentation Please refer to the original asio documentation at https://think-async.com/Asio/Documentation. Asio also comes with a number of examples which could be find under Documentation/Examples on that web site.

Supported features ESP platform port currently supports only network asynchronous socket operations; does not support serial port. SSL/TLS support is disabled by default and could be enabled in component configuration menu by choosing TLS library from

- mbedTLS with OpenSSL translation layer (default option)
- wolfSSL

SSL support is very basic at this stage and it does include following features:

- Verification callbacks
- DH property files
- Certificates/private keys file APIs

Internal asio settings for ESP include

- EXCEPTIONS are enabled in ASIO if enabled in menuconfig
- TYPEID is enabled in ASIO if enabled in menuconfig

Application Example

ESP examples are based on standard asio protocols/asio:

- protocols/asio/udp_echo_server
- protocols/asio/tcp_echo_server
- protocols/asio/chat_client
- protocols/asio/chat_server
- protocols/asio/ssl_client_server

Please refer to the specific example README.md for details

2.4.9 ESP-MQTT

Overview

ESP-MQTT is an implementation of MQTT protocol client (MQTT is a lightweight publish/subscribe messaging protocol).

Features

- Supports MQTT over TCP, SSL with mbedtls, MQTT over Websocket, MQTT over Websocket Secure.
- Easy to setup with URI
- Multiple instances (Multiple clients in one application)
- Support subscribing, publishing, authentication, last will messages, keep alive pings and all 3 QoS levels (it should be a fully functional client).

Application Example

- protocols/mqtt/tcp: MQTT over tcp, default port 1883
- protocols/mqtt/ssl: MQTT over tcp, default port 8883
- protocols/mqtt/ssl_psk: MQTT over tcp using pre-shared keys for authentication, default port 8883
- protocols/mqtt/ws: MQTT over Websocket, default port 80
- protocols/mqtt/wss: MQTT over Websocket Secure, default port 443

Configuration

URI

- Curently support `mqtt`, `mqtts`, `ws`, `wss` schemes
- MQTT over TCP samples:
  - `mqtt://mqtt.eclipseprojects.io`: MQTT over TCP, default port 1883:
  - `mqtt://mqtt.eclipseprojects.io:1884` MQTT over TCP, port 1884:
  - `mqtt://username:password@mqtt.eclipseprojects.io:1884` MQTT over TCP, port 1884, with username and password
- MQTT over SSL samples:
  - `mqtts://mqtt.eclipseprojects.io`: MQTT over SSL, port 8883
  - `mqtts://mqtt.eclipseprojects.io:8884`: MQTT over SSL, port 8884
- MQTT over Websocket samples:
  - `ws://mqtt.eclipseprojects.io:80/mqtt`
- MQTT over Websocket Secure samples:
  - `wss://mqtt.eclipseprojects.io:443/mqtt`
- Minimal configurations:

```
const esp_mqtt_client_config_t mqtt_cfg = {
    .uri = "mqtt://mqtt.eclipseprojects.io",
    // .user_context = (void *)your_context
};
esp_mqtt_client_handle_t client = esp_mqtt_client_init(&mqtt_cfg);
esp_mqtt_client_register_event(client, ESP_EVENT_ANY_ID, mqtt_event_handler,␣
↪client);
esp_mqtt_client_start(client);
```

- Note: By default mqtt client uses event loop library to post related mqtt events (connected, subscribed, published, etc.)

SSL

- Get certificate from server, example: `mqtt.eclipseprojects.io openssl s_client -showcerts -connect mqtt.eclipseprojects.io:8883 </dev/null 2>/dev/null|openssl x509 -outform PEM >mqtt_eclipse_org.pem`
- Check the sample application: `examples/mqtt_ssl`
- Configuration:

```
const esp_mqtt_client_config_t mqtt_cfg = {
    .uri = "mqtts://mqtt.eclipseprojects.io:8883",
```

(下页继续)

(续上页)

```
    .event_handle = mqtt_event_handler,
    .cert_pem = (const char *)mqtt_eclipse_org_pem_start,
};
```

If the certificate is not null-terminated then `cert_len` should also be set. Other SSL related configuration parameters are:

- `use_global_ca_store`: use the global certificate store to verify server certificate, see `esp-tls.h` for more information
- `client_cert_pem`: pointer to certificate data in PEM or DER format for SSL mutual authentication, default is NULL, not required if mutual authentication is not needed.
- `client_cert_len`: length of the buffer pointed to by client_cert_pem. May be 0 for null-terminated pem.
- `client_key_pem`: pointer to private key data in PEM or DER format for SSL mutual authentication, default is NULL, not required if mutual authentication is not needed.
- `client_key_len`: length of the buffer pointed to by client_key_pem. May be 0 for null-terminated pem.
- `psk_hint_key`: pointer to PSK struct defined in esp_tls.h to enable PSK authentication (as alternative to certificate verification). If not NULL and server/client certificates are NULL, PSK is enabled
- `alpn_protos`: NULL-terminated list of protocols to be used for ALPN.

Last Will and Testament MQTT allows for a last will and testament (LWT) message to notify other clients when a client ungracefully disconnects. This is configured by the following fields in the `esp_mqtt_client_config_t` struct.

- `lwt_topic`: pointer to the LWT message topic
- `lwt_msg`: pointer to the LWT message
- `lwt_msg_len`: length of the LWT message, required if `lwt_msg` is not null-terminated
- `lwt_qos`: quality of service for the LWT message
- `lwt_retain`: specifies the retain flag of the LWT message

Other Configuration Parameters

- `disable_clean_session`: determines the clean session flag for the connect message, defaults to a clean session
- `keepalive`: determines how many seconds the client will wait for a ping response before disconnecting, default is 120 seconds.
- `disable_auto_reconnect`: enable to stop the client from reconnecting to server after errors or disconnects
- `user_context`: custom context that will be passed to the event handler
- `task_prio`: MQTT task priority, defaults to 5
- `task_stack`: MQTT task stack size, defaults to 6144 bytes, setting this will override setting from menuconfig
- `buffer_size`: size of MQTT send/receive buffer, default is 1024 bytes
- `username`: pointer to the username used for connecting to the broker
- `password`: pointer to the password used for connecting to the broker
- `client_id`: pointer to the client id, defaults to `ESP32_%CHIPID%` where %CHIPID% are the last 3 bytes of MAC address in hex format
- `host`: MQTT broker domain (ipv4 as string), setting the uri will override this
- `port`: MQTT broker port, specifying the port in the uri will override this
- `transport`: sets the transport protocol, setting the uri will override this
- `refresh_connection_after_ms`: refresh connection after this value (in milliseconds)
- `event_handle`: handle for MQTT events as a callback in legacy mode
- `event_loop_handle`: handle for MQTT event loop library

For more options on `esp_mqtt_client_config_t`, please refer to API reference below

Change settings in Project Configuration Menu The settings for MQTT can be found using `idf.py menuconfig`, under Component config -> ESP-MQTT Configuration

The following settings are available:

- *CONFIG_MQTT_PROTOCOL_311*: Enables 3.1.1 version of MQTT protocol
- *CONFIG_MQTT_TRANSPORT_SSL*, *CONFIG_MQTT_TRANSPORT_WEBSOCKET*: Enables specific MQTT transport layer, such as SSL, WEBSOCKET, WEBSOCKET_SECURE
- *CONFIG_MQTT_CUSTOM_OUTBOX*: Disables default implementation of mqtt_outbox, so a specific implementaion can be supplied

Events

The following events may be posted by the MQTT client:

- `MQTT_EVENT_BEFORE_CONNECT`: The client is initialized and about to start connecting to the broker.
- `MQTT_EVENT_CONNECTED`: The client has successfully established a connection to the broker. The client is now ready to send and receive data.
- `MQTT_EVENT_DISCONNECTED`: The client has aborted the connection due to being unable to read or write data, e.g. because the server is unavailable.
- `MQTT_EVENT_SUBSCRIBED`: The broker has acknowledged the client's subscribe request. The event data will contain the message ID of the subscribe message.
- `MQTT_EVENT_UNSUBSCRIBED`: The broker has acknowledged the client's unsubscribe request. The event data will contain the message ID of the unsubscribe message.
- `MQTT_EVENT_PUBLISHED`: The broker has acknowledged the client's publish message. This will only be posted for Quality of Service level 1 and 2, as level 0 does not use acknowledgements. The event data will contain the message ID of the publish message.
- `MQTT_EVENT_DATA`: The client has received a publish message. The event data contains: message ID, name of the topic it was published to, received data and its length. For data that exceeds the internal buffer multiple *MQTT_EVENT_DATA* will be posted and *current_data_offset* and *total_data_len* from event data updated to keep track of the fragmented message.
- `MQTT_EVENT_ERROR`: The client has encountered an error. *esp_mqtt_error_type_t* from *error_handle* in the event data can be used to further determine the type of the error. The type of error will determine which parts of the *error_handle* struct is filled.

API Reference

Header File

- mqtt/esp-mqtt/include/mqtt_client.h

Functions

esp_mqtt_client_handle_t **esp_mqtt_client_init**(**const** *esp_mqtt_client_config_t* **config*)

Creates mqtt client handle based on the configuration.

Return mqtt_client_handle if successfully created, NULL on error

Parameters

- `config`: mqtt configuration structure

esp_err_t **esp_mqtt_client_set_uri**(*esp_mqtt_client_handle_t client*, **const** char **uri*)

Sets mqtt connection URI. This API is usually used to overrides the URI configured in esp_mqtt_client_init.

Return ESP_FAIL if URI parse error, ESP_OK on success

Parameters

- `client`: mqtt client handle
- `uri`:

esp_err_t **esp_mqtt_client_start**(*esp_mqtt_client_handle_t client*)

Starts mqtt client with already created client handle.

Return ESP_OK on success ESP_ERR_INVALID_ARG on wrong initialization ESP_FAIL on other error

Parameters

- `client`: mqtt client handle

esp_err_t **esp_mqtt_client_reconnect** (*esp_mqtt_client_handle_t client*)
This api is typically used to force reconnection upon a specific event.

Return ESP_OK on success ESP_ERR_INVALID_ARG on wrong initialization ESP_FAIL if client is in invalid state

Parameters
- `client`: mqtt client handle

esp_err_t **esp_mqtt_client_disconnect** (*esp_mqtt_client_handle_t client*)
This api is typically used to force disconnection from the broker.

Return ESP_OK on success ESP_ERR_INVALID_ARG on wrong initialization

Parameters
- `client`: mqtt client handle

esp_err_t **esp_mqtt_client_stop** (*esp_mqtt_client_handle_t client*)
Stops mqtt client tasks.

- Notes:
- Cannot be called from the mqtt event handler

Return ESP_OK on success ESP_ERR_INVALID_ARG on wrong initialization ESP_FAIL if client is in invalid state

Parameters
- `client`: mqtt client handle

int **esp_mqtt_client_subscribe** (*esp_mqtt_client_handle_t client*, **const** char **topic*, int *qos*)
Subscribe the client to defined topic with defined qos.

Notes:

- Client must be connected to send subscribe message
- This API is could be executed from a user task or from a mqtt event callback i.e. internal mqtt task (API is protected by internal mutex, so it might block if a longer data receive operation is in progress.

Return message_id of the subscribe message on success -1 on failure

Parameters
- `client`: mqtt client handle
- `topic`:
- `qos`:

int **esp_mqtt_client_unsubscribe** (*esp_mqtt_client_handle_t client*, **const** char **topic*)
Unsubscribe the client from defined topic.

Notes:

- Client must be connected to send unsubscribe message
- It is thread safe, please refer to `esp_mqtt_client_subscribe` for details

Return message_id of the subscribe message on success -1 on failure

Parameters
- `client`: mqtt client handle
- `topic`:

int **esp_mqtt_client_publish** (*esp_mqtt_client_handle_t client*, **const** char **topic*, **const** char **data*, int *len*, int *qos*, int *retain*)
Client to send a publish message to the broker.

Notes:

- This API might block for several seconds, either due to network timeout (10s) or if publishing payloads longer than internal buffer (due to message fragmentation)
- Client doesn't have to be connected for this API to work, enqueueing the messages with qos>1 (returning -1 for all the qos=0 messages if disconnected). If MQTT_SKIP_PUBLISH_IF_DISCONNECTED is enabled, this API will not attempt to publish when the client is not connected and will always return -1.
- It is thread safe, please refer to `esp_mqtt_client_subscribe` for details

Return message_id of the publish message (for QoS 0 message_id will always be zero) on success. -1 on failure.

Parameters

- `client`: mqtt client handle
- `topic`: topic string
- `data`: payload string (set to NULL, sending empty payload message)
- `len`: data length, if set to 0, length is calculated from payload string
- `qos`: qos of publish message
- `retain`: retain flag

int **esp_mqtt_client_enqueue**(*esp_mqtt_client_handle_t client*, **const** char **topic*, **const** char **data*, int *len*, int *qos*, int *retain*, bool *store*)

Enqueue a message to the outbox, to be sent later. Typically used for messages with qos>0, but could be also used for qos=0 messages if store=true.

This API generates and stores the publish message into the internal outbox and the actual sending to the network is performed in the mqtt-task context (in contrast to the esp_mqtt_client_publish() which sends the publish message immediately in the user task' s context). Thus, it could be used as a non blocking version of esp_mqtt_client_publish().

Return message_id if queued successfully, -1 otherwise

Parameters

- `client`: mqtt client handle
- `topic`: topic string
- `data`: payload string (set to NULL, sending empty payload message)
- `len`: data length, if set to 0, length is calculated from payload string
- `qos`: qos of publish message
- `retain`: retain flag
- `store`: if true, all messages are enqueued; otherwise only qos1 and qos 2 are enqueued

esp_err_t **esp_mqtt_client_destroy**(*esp_mqtt_client_handle_t client*)

Destroys the client handle.

Notes:

- Cannot be called from the mqtt event handler

Return ESP_OK ESP_ERR_INVALID_ARG on wrong initialization

Parameters

- `client`: mqtt client handle

esp_err_t **esp_mqtt_set_config**(*esp_mqtt_client_handle_t client*, **const** *esp_mqtt_client_config_t *config*)

Set configuration structure, typically used when updating the config (i.e. on "before_connect" event.

Return ESP_ERR_NO_MEM if failed to allocate ESP_ERR_INVALID_ARG if conflicts on transport configuration. ESP_OK on success

Parameters

- `client`: mqtt client handle
- `config`: mqtt configuration structure

esp_err_t **esp_mqtt_client_register_event**(*esp_mqtt_client_handle_t client*, *esp_mqtt_event_id_t event*, *esp_event_handler_t event_handler*, void **event_handler_arg*)

Registers mqtt event.

Return ESP_ERR_NO_MEM if failed to allocate ESP_ERR_INVALID_ARG on wrong initialization ESP_OK on success

Parameters

- `client`: mqtt client handle
- `event`: event type
- `event_handler`: handler callback
- `event_handler_arg`: handlers context

int **esp_mqtt_client_get_outbox_size**(*esp_mqtt_client_handle_t client*)
Get outbox size.

Return outbox size 0 on wrong initialization
Parameters
- `client`: mqtt client handle

Structures

struct esp_mqtt_error_codes
MQTT error code structure to be passed as a contextual information into ERROR event.

Important: This structure extends *esp_tls_last_error* error structure and is backward compatible with it (so might be down-casted and treated as *esp_tls_last_error* error, but recommended to update applications if used this way previously)

Use this structure directly checking error_type first and then appropriate error code depending on the source of the error:

error_type	related member variables	note
MQTT_ERROR_TYPE_TCP_TRANSPORT	esp_tls_last_esp_err, esp_tls_stack_err, esp_tls_cert_verify_flags, sock_errno	Error reported from tcp_transport/esp-tls
MQTT_ERROR_TYPE_CONNECTION_REFUSED	connect_return_code	Internal error reported from MQTT broker on connection

Public Members

esp_err_t **esp_tls_last_esp_err**
last esp_err code reported from esp-tls component

int **esp_tls_stack_err**
tls specific error code reported from underlying tls stack

int **esp_tls_cert_verify_flags**
tls flags reported from underlying tls stack during certificate verification

esp_mqtt_error_type_t **error_type**
error type referring to the source of the error

esp_mqtt_connect_return_code_t **connect_return_code**
connection refused error code reported from MQTT broker on connection

int **esp_transport_sock_errno**
errno from the underlying socket

struct esp_mqtt_event_t
MQTT event configuration structure

Public Members

esp_mqtt_event_id_t **event_id**
MQTT event type

esp_mqtt_client_handle_t **client**
MQTT client handle for this event

void ***user_context**
User context passed from MQTT client config

char ***data**
Data associated with this event

int **data_len**
Length of the data for this event

int **total_data_len**
Total length of the data (longer data are supplied with multiple events)

int **current_data_offset**
Actual offset for the data associated with this event

char ***topic**
Topic associated with this event

int **topic_len**
Length of the topic for this event associated with this event

int **msg_id**
MQTT messaged id of message

int **session_present**
MQTT session_present flag for connection event

esp_mqtt_error_codes_t ***error_handle**
esp-mqtt error handle including esp-tls errors as well as internal mqtt errors

bool **retain**
Retained flag of the message associated with this event

int **qos**
qos of the messages associated with this event

bool **dup**
dup flag of the message associated with this event

struct esp_mqtt_client_config_t
MQTT client configuration structure

Public Members

mqtt_event_callback_t **event_handle**
handle for MQTT events as a callback in legacy mode

esp_event_loop_handle_t **event_loop_handle**
handle for MQTT event loop library

const char ***host**
MQTT server domain (ipv4 as string)

const char ***uri**
Complete MQTT broker URI

uint32_t **port**
MQTT server port

bool **set_null_client_id**
Selects a NULL client id

const char ***client_id**
Set client id. Ignored if set_null_client_id == true If NULL set the default client id. Default client id is `ESP32_CHIPID%` where CHIPID% are last 3 bytes of MAC address in hex format

const char ***username**
MQTT username

const char ***password**
MQTT password

const char ***lwt_topic**
LWT (Last Will and Testament) message topic (NULL by default)

const char ***lwt_msg**
LWT message (NULL by default)

int **lwt_qos**
LWT message qos

int **lwt_retain**
LWT retained message flag

int **lwt_msg_len**
LWT message length

int **disable_clean_session**
mqtt clean session, default clean_session is true

int **keepalive**
mqtt keepalive, default is 120 seconds

bool **disable_auto_reconnect**
this mqtt client will reconnect to server (when errors/disconnect). Set disable_auto_reconnect=true to disable

void ***user_context**
pass user context to this option, then can receive that context in `event->user_context`

int **task_prio**
MQTT task priority, default is 5, can be changed in `make menuconfig`

int **task_stack**
MQTT task stack size, default is 6144 bytes, can be changed in `make menuconfig`

int **buffer_size**
size of MQTT send/receive buffer, default is 1024 (only receive buffer size if `out_buffer_size` defined)

const char ***cert_pem**
Pointer to certificate data in PEM or DER format for server verify (with SSL), default is NULL, not required to verify the server. PEM-format must have a terminating NULL-character. DER-format requires the length to be passed in cert_len.

size_t **cert_len**
Length of the buffer pointed to by cert_pem. May be 0 for null-terminated pem

const char ***client_cert_pem**
Pointer to certificate data in PEM or DER format for SSL mutual authentication, default is NULL, not required if mutual authentication is not needed. If it is not NULL, also `client_key_pem` has to be provided. PEM-format must have a terminating NULL-character. DER-format requires the length to be passed in client_cert_len.

size_t **client_cert_len**
Length of the buffer pointed to by client_cert_pem. May be 0 for null-terminated pem

const char ***client_key_pem**
Pointer to private key data in PEM or DER format for SSL mutual authentication, default is NULL, not required if mutual authentication is not needed. If it is not NULL, also `client_cert_pem` has to be provided. PEM-format must have a terminating NULL-character. DER-format requires the length to be passed in client_key_len

size_t **client_key_len**
Length of the buffer pointed to by client_key_pem. May be 0 for null-terminated pem

esp_mqtt_transport_t **transport**
overrides URI transport

int **refresh_connection_after_ms**
Refresh connection after this value (in milliseconds)

const struct *psk_key_hint* ***psk_hint_key**
Pointer to PSK struct defined in esp_tls.h to enable PSK authentication (as alternative to certificate verification). If not NULL and server/client certificates are NULL, PSK is enabled

bool **use_global_ca_store**
Use a global ca_store for all the connections in which this bool is set.

esp_err_t (***crt_bundle_attach**)(void *conf)
Pointer to ESP x509 Certificate Bundle attach function for the usage of certification bundles in mqtts

int **reconnect_timeout_ms**
Reconnect to the broker after this value in miliseconds if auto reconnect is not disabled (defaults to 10s)

const char ****alpn_protos**
NULL-terminated list of supported application protocols to be used for ALPN

const char ***clientkey_password**
Client key decryption password string

int **clientkey_password_len**
String length of the password pointed to by clientkey_password

esp_mqtt_protocol_ver_t **protocol_ver**
MQTT protocol version used for connection, defaults to value from menuconfig

int **out_buffer_size**
size of MQTT output buffer. If not defined, both output and input buffers have the same size defined as `buffer_size`

bool **skip_cert_common_name_check**
Skip any validation of server certificate CN field, this reduces the security of TLS and makes the mqtt client susceptible to MITM attacks

bool **use_secure_element**
enable secure element for enabling SSL connection

void ***ds_data**
carrier of handle for digital signature parameters

int **network_timeout_ms**
Abort network operation if it is not completed after this value, in milliseconds (defaults to 10s)

bool **disable_keepalive**
Set disable_keepalive=true to turn off keep-alive mechanism, false by default (keepalive is active by default). Note: setting the config value `keepalive` to `0` doesn't disable keepalive feature, but uses a default keepalive period

const char ***path**
Path in the URI

int **message_retransmit_timeout**
timeout for retansmit of failded packet

Macros

MQTT_ERROR_TYPE_ESP_TLS
MQTT_ERROR_TYPE_TCP_TRANSPORT error type hold all sorts of transport layer errors, including ESP-TLS error, but in the past only the errors from MQTT_ERROR_TYPE_ESP_TLS layer were reported, so the ESP-TLS error type is re-defined here for backward compatibility

Type Definitions

typedef struct esp_mqtt_client ***esp_mqtt_client_handle_t**
typedef struct *esp_mqtt_error_codes* **esp_mqtt_error_codes_t**
MQTT error code structure to be passed as a contextual information into ERROR event.

Important: This structure extends *esp_tls_last_error* error structure and is backward compatible with it (so might be down-casted and treated as *esp_tls_last_error* error, but recommended to update applications if used this way previously)

Use this structure directly checking error_type first and then appropriate error code depending on the source of the error:

| error_type | related member variables | note | | MQTT_ERROR_TYPE_TCP_TRANSPORT | esp_tls_last_esp_err, esp_tls_stack_err, esp_tls_cert_verify_flags, sock_errno | Error reported from tcp_transport/esp-tls | | MQTT_ERROR_TYPE_CONNECTION_REFUSED | connect_return_code | Internal error reported from MQTT broker on connection |

typedef *esp_mqtt_event_t* ***esp_mqtt_event_handle_t**

typedef *esp_err_t* (***mqtt_event_callback_t**) (*esp_mqtt_event_handle_t* event)

Enumerations

enum esp_mqtt_event_id_t

MQTT event types.

User event handler receives context data in *esp_mqtt_event_t* structure with

- `user_context` - user data from *esp_mqtt_client_config_t*
- `client` - mqtt client handle
- various other data depending on event type

Values:

MQTT_EVENT_ANY = -1

MQTT_EVENT_ERROR = 0

on error event, additional context: connection return code, error handle from *esp_tls* (if supported)

MQTT_EVENT_CONNECTED

connected event, additional context: session_present flag

MQTT_EVENT_DISCONNECTED

disconnected event

MQTT_EVENT_SUBSCRIBED

subscribed event, additional context:

- msg_id message id
- data pointer to the received data
- data_len length of the data for this event

MQTT_EVENT_UNSUBSCRIBED

unsubscribed event

MQTT_EVENT_PUBLISHED

published event, additional context: msg_id

MQTT_EVENT_DATA

data event, additional context:

- msg_id message id
- topic pointer to the received topic
- topic_len length of the topic
- data pointer to the received data
- data_len length of the data for this event
- current_data_offset offset of the current data for this event
- total_data_len total length of the data received
- retain retain flag of the message
- qos qos level of the message

- dup dup flag of the message Note: Multiple MQTT_EVENT_DATA could be fired for one message, if it is longer than internal buffer. In that case only first event contains topic pointer and length, other contain data only with current data length and current data offset updating.

MQTT_EVENT_BEFORE_CONNECT
The event occurs before connecting

MQTT_EVENT_DELETED
Notification on delete of one message from the internal outbox, if the message couldn't have been sent and acknowledged before expiring defined in OUTBOX_EXPIRED_TIMEOUT_MS. (events are not posted upon deletion of successfully acknowledged messages)

- This event id is posted only if MQTT_REPORT_DELETED_MESSAGES==1
- Additional context: msg_id (id of the deleted message).

enum esp_mqtt_connect_return_code_t
MQTT connection error codes propagated via ERROR event

Values:

MQTT_CONNECTION_ACCEPTED = 0
Connection accepted

MQTT_CONNECTION_REFUSE_PROTOCOL
MQTT connection refused reason: Wrong protocol

MQTT_CONNECTION_REFUSE_ID_REJECTED
MQTT connection refused reason: ID rejected

MQTT_CONNECTION_REFUSE_SERVER_UNAVAILABLE
MQTT connection refused reason: Server unavailable

MQTT_CONNECTION_REFUSE_BAD_USERNAME
MQTT connection refused reason: Wrong user

MQTT_CONNECTION_REFUSE_NOT_AUTHORIZED
MQTT connection refused reason: Wrong username or password

enum esp_mqtt_error_type_t
MQTT connection error codes propagated via ERROR event

Values:

MQTT_ERROR_TYPE_NONE = 0

MQTT_ERROR_TYPE_TCP_TRANSPORT

MQTT_ERROR_TYPE_CONNECTION_REFUSED

enum esp_mqtt_transport_t
Values:

MQTT_TRANSPORT_UNKNOWN = 0x0

MQTT_TRANSPORT_OVER_TCP
MQTT over TCP, using scheme: `mqtt`

MQTT_TRANSPORT_OVER_SSL
MQTT over SSL, using scheme: `mqtts`

MQTT_TRANSPORT_OVER_WS
MQTT over Websocket, using scheme:: `ws`

MQTT_TRANSPORT_OVER_WSS
MQTT over Websocket Secure, using scheme: `wss`

enum esp_mqtt_protocol_ver_t
MQTT protocol version used for connection

Values:

MQTT_PROTOCOL_UNDEFINED = 0

MQTT_PROTOCOL_V_3_1

MQTT_PROTOCOL_V_3_1_1

2.4.10 ESP-Modbus

Overview

The Modbus serial communication protocol is de facto standard protocol widely used to connect industrial electronic devices. Modbus allows communication among many devices connected to the same network, for example, a system that measures temperature and humidity and communicates the results to a computer. The Modbus protocol uses several types of data: Holding Registers, Input Registers, Coils (single bit output), Discrete Inputs. Versions of the Modbus protocol exist for serial port and for Ethernet and other protocols that support the Internet protocol suite. There are many variants of Modbus protocols, some of them are:

- `Modbus RTU` —This is used in serial communication and makes use of a compact, binary representation of the data for protocol communication. The RTU format follows the commands/data with a cyclic redundancy check checksum as an error check mechanism to ensure the reliability of data. Modbus RTU is the most common implementation available for Modbus. A Modbus RTU message must be transmitted continuously without inter-character hesitations. Modbus messages are framed (separated) by idle (silent) periods. The RS-485 interface communication is usually used for this type.
- `Modbus ASCII` —This is used in serial communication and makes use of ASCII characters for protocol communication. The ASCII format uses a longitudinal redundancy check checksum. Modbus ASCII messages are framed by leading colon (":") and trailing newline (CR/LF).
- `Modbus TCP/IP or Modbus TCP` —This is a Modbus variant used for communications over TCP/IP networks, connecting over port 502. It does not require a checksum calculation, as lower layers already provide checksum protection.

Modbus port specific API overview ESP-IDF supports Modbus Serial/TCP slave and master protocol stacks (port) and provides Modbus controller interface API to interact with user application.

The functions below are used to create and then initialize actual Modbus controller interface for Serial/TCP port accordingly:

esp_err_t **mbc_slave_init**(mb_port_type_t *port_type*, void **handler*)

Initialize Modbus Slave controller and stack for Serial port.

Return

- ESP_OK Success
- ESP_ERR_NO_MEM Parameter error
- ESP_ERR_NOT_SUPPORTED Port type not supported
- ESP_ERR_INVALID_STATE Initialization failure

Parameters

- `[out] handler`: handler(pointer) to master data structure
- `[in] port_type`: the type of port

esp_err_t **mbc_master_init**(mb_port_type_t *port_type*, void **handler*)

Initialize Modbus Master controller and stack for Serial port.

Return

- ESP_OK Success
- ESP_ERR_NO_MEM Parameter error
- ESP_ERR_NOT_SUPPORTED Port type not supported
- ESP_ERR_INVALID_STATE Initialization failure

Parameters

- `[out] handler`: handler(pointer) to master data structure
- `[in] port_type`: type of stack

esp_err_t **mbc_slave_init_tcp**(void **handler*)
Initialize Modbus Slave controller and stack for TCP port.

Return
- ESP_OK Success
- ESP_ERR_NO_MEM Parameter error
- ESP_ERR_NOT_SUPPORTED Port type not supported
- ESP_ERR_INVALID_STATE Initialization failure

Parameters
- `[out] handler`: handler(pointer) to master data structure

esp_err_t **mbc_master_init_tcp**(void **handler*)
Initialize Modbus controller and stack for TCP port.

Return
- ESP_OK Success
- ESP_ERR_NO_MEM Parameter error
- ESP_ERR_NOT_SUPPORTED Port type not supported
- ESP_ERR_INVALID_STATE Initialization failure

Parameters
- `[out] handler`: handler(pointer) to master data structure

Modbus common interface API overview The function initializes the Modbus controller interface and its active context (tasks, RTOS objects and other resources).

esp_err_t **mbc_slave_setup**(void **comm_info*)
Set Modbus communication parameters for the controller.

Return
- ESP_OK Success
- ESP_ERR_INVALID_ARG Incorrect parameter data

Parameters
- `comm_info`: Communication parameters structure.

esp_err_t **mbc_master_setup**(void **comm_info*)
Set Modbus communication parameters for the controller.

Return
- ESP_OK Success
- ESP_ERR_INVALID_ARG Incorrect parameter data

Parameters
- `comm_info`: Communication parameters structure.

The function is used to setup communication parameters of the Modbus stack. See the Modbus controller API documentation for more information. Note: The communication structure provided as a parameter is different for serial and TCP communication mode.

mbc_slave_set_descriptor(): Initialization of slave descriptor.

mbc_master_set_descriptor(): Initialization of master descriptor.

The Modbus stack uses parameter description tables (descriptors) for communication. These are different for master and slave implementation of stack and should be assigned by the API call before start of communication.

esp_err_t **mbc_slave_start**(void)
Start Modbus communication stack.

Return
- ESP_OK Success
- ESP_ERR_INVALID_ARG Modbus stack start error

esp_err_t **mbc_master_start**(void)
Start Modbus communication stack.

Return

- ESP_OK Success
- ESP_ERR_INVALID_ARG Modbus stack start error

Modbus controller start function. Starts stack and interface and allows communication.

esp_err_t **mbc_slave_destroy**(void)
Destroy Modbus controller and stack.

Return
- ESP_OK Success
- ESP_ERR_INVALID_STATE Parameter error

esp_err_t **mbc_master_destroy**(void)
Destroy Modbus controller and stack.

Return
- ESP_OK Success
- ESP_ERR_INVALID_STATE Parameter error

This function stops Modbus communication stack and destroys controller interface.

There are some configurable parameters of modbus_controller interface and Modbus stack that can be configured using KConfig values in "Modbus configuration" menu. The most important option in KConfig menu is "Enable Modbus stack support ···" for appropriate communication mode that allows to select master or slave stack for implementation. See the examples for more information about how to use these API functions.

Modbus slave interface API overview The slave stack requires the user defined structures which represent Modbus parameters accessed by stack. These structures should be prepared by user and be assigned to the modbus_controller interface using *mbc_slave_set_descriptor()* API call before start of communication. The interface API functions below are used for Modbus slave application:

esp_err_t **mbc_slave_set_descriptor**(mb_register_area_descriptor_t *descr_data*)
Set Modbus area descriptor.

Return
- ESP_OK: The appropriate descriptor is set
- ESP_ERR_INVALID_ARG: The argument is incorrect

Parameters
- `descr_data`: Modbus registers area descriptor structure

The function initializes Modbus communication descriptors for each type of Modbus register area (Holding Registers, Input Registers, Coils (single bit output), Discrete Inputs). Once areas are initialized and the *mbc_slave_start()* API is called the Modbus stack can access the data in user data structures by request from master. See the `mb_register_area_descriptor_t` and example for more information.

mb_event_group_t **mbc_slave_check_event**(mb_event_group_t *group*)
Wait for specific event on parameter change.

Return
- mb_event_group_t event bits triggered

Parameters
- `group`: Group event bit mask to wait for change

The blocking call to function waits for event specified in the input parameter as event mask. Once master access the parameter and event mask matches the parameter the application task will be unblocked and function will return ESP_OK. See the `mb_event_group_t` for more information about Modbus event masks.

esp_err_t **mbc_slave_get_param_info**(mb_param_info_t **reg_info*, uint32_t *timeout*)
Get parameter information.

Return
- ESP_OK Success
- ESP_ERR_TIMEOUT Can not get data from parameter queue or queue overflow

Parameters
- `[out] reg_info`: parameter info structure

- `timeout`: Timeout in milliseconds to read information from parameter queue

The function gets information about accessed parameters from modbus controller event queue. The KConfig 'CONFIG_FMB_CONTROLLER_NOTIFY_QUEUE_SIZE' key can be used to configure the notification queue size. The timeout parameter allows to specify timeout for waiting notification. The `mb_param_info_t` structure contain information about accessed parameter.

Modbus master interface API overview The Modbus master implementation requires parameter description table be defined before start of stack. This table describes characteristics (physical parameters like temperature, humidity, etc.) and links them to Modbus registers in specific slave device in the Modbus segment. The table has to be assigned to the modbus_controller interface using *`mbc_master_set_descriptor()`* API call before start of communication.

Below are the interface API functions that are used to setup and use Modbus master stack from user application and can be executed in next order:

esp_err_t **mbc_master_set_descriptor**(**const** mb_parameter_descriptor_t **descriptor*, **const** uint16_t *num_elements*)

Assign parameter description table for Modbus controller interface.

Return

- esp_err_t ESP_OK - set descriptor successfully
- esp_err_t ESP_ERR_INVALID_ARG - invalid argument in function call

Parameters

- `[in] descriptor`: pointer to parameter description table
- `num_elements`: number of elements in the table

Assigns parameter description table for Modbus controller interface. The table has to be prepared by user according to particular implementation. Note: TCP communication stack requires to setup additional information about modbus slaves that corresponds to each address(index) used in description table. This information with IP addresses of the slaves is assigned using communication structure and interface setup call.

esp_err_t **mbc_master_send_request**(mb_param_request_t **request*, void **data_ptr*)

Send data request as defined in parameter request, waits response from slave and returns status of command execution. This function provides standard way for read/write access to Modbus devices in the network.

Return

- esp_err_t ESP_OK - request was successful
- esp_err_t ESP_ERR_INVALID_ARG - invalid argument of function
- esp_err_t ESP_ERR_INVALID_RESPONSE - an invalid response from slave
- esp_err_t ESP_ERR_TIMEOUT - operation timeout or no response from slave
- esp_err_t ESP_ERR_NOT_SUPPORTED - the request command is not supported by slave
- esp_err_t ESP_FAIL - slave returned an exception or other failure

Parameters

- `[in] request`: pointer to request structure of type mb_param_request_t
- `[in] data_ptr`: pointer to data buffer to send or received data (dependent of command field in request)

This function sends data request as defined in parameter request, waits response from corresponded slave and returns status of command execution. This function provides a standard way for read/write access to Modbus devices in the network.

esp_err_t **mbc_master_get_cid_info**(uint16_t *cid*, **const** mb_parameter_descriptor_t ***param_info*)

Get information about supported characteristic defined as cid. Uses parameter description table to get this information. The function will check if characteristic defined as a cid parameter is supported and returns its description in param_info. Returns ESP_ERR_NOT_FOUND if characteristic is not supported.

Return

- esp_err_t ESP_OK - request was successful and buffer contains the supported characteristic name
- esp_err_t ESP_ERR_INVALID_ARG - invalid argument of function
- esp_err_t ESP_ERR_NOT_FOUND - the characteristic (cid) not found
- esp_err_t ESP_FAIL - unknown error during lookup table processing

Parameters

- `[in] cid`: characteristic id
- `param_info`: pointer to pointer of characteristic data.

The function gets information about supported characteristic defined as cid. It will check if characteristic is supported and returns its description.

esp_err_t **mbc_master_get_parameter**(uint16_t *cid*, char **name*, uint8_t **value*, uint8_t **type*)

Read parameter from modbus slave device whose name is defined by name and has cid. The additional data for request is taken from parameter description (lookup) table.

Return

- esp_err_t ESP_OK - request was successful and value buffer contains representation of actual parameter data from slave
- esp_err_t ESP_ERR_INVALID_ARG - invalid argument of function or parameter descriptor
- esp_err_t ESP_ERR_INVALID_RESPONSE - an invalid response from slave
- esp_err_t ESP_ERR_INVALID_STATE - invalid state during data processing or allocation failure
- esp_err_t ESP_ERR_TIMEOUT - operation timed out and no response from slave
- esp_err_t ESP_ERR_NOT_SUPPORTED - the request command is not supported by slave
- esp_err_t ESP_ERR_NOT_FOUND - the parameter is not found in the parameter description table
- esp_err_t ESP_FAIL - slave returned an exception or other failure

Parameters

- `[in] cid`: id of the characteristic for parameter
- `[in] name`: pointer into string name (key) of parameter (null terminated)
- `[out] value`: pointer to data buffer of parameter
- `[out] type`: parameter type associated with the name returned from parameter description table.

The function reads data of characteristic defined in parameters from Modbus slave device and returns its data. The additional data for request is taken from parameter description table.

esp_err_t **mbc_master_set_parameter**(uint16_t *cid*, char **name*, uint8_t **value*, uint8_t **type*)

Set characteristic’s value defined as a name and cid parameter. The additional data for cid parameter request is taken from master parameter lookup table.

Return

- esp_err_t ESP_OK - request was successful and value was saved in the slave device registers
- esp_err_t ESP_ERR_INVALID_ARG - invalid argument of function or parameter descriptor
- esp_err_t ESP_ERR_INVALID_RESPONSE - an invalid response from slave during processing of parameter
- esp_err_t ESP_ERR_INVALID_STATE - invalid state during data processing or allocation failure
- esp_err_t ESP_ERR_TIMEOUT - operation timed out and no response from slave
- esp_err_t ESP_ERR_NOT_SUPPORTED - the request command is not supported by slave
- esp_err_t ESP_FAIL - slave returned an exception or other failure

Parameters

- `[in] cid`: id of the characteristic for parameter
- `[in] name`: pointer into string name (key) of parameter (null terminated)
- `[out] value`: pointer to data buffer of parameter (actual representation of json value field in binary form)
- `[out] type`: pointer to parameter type associated with the name returned from parameter lookup table.

The function writes characteristic’s value defined as a name and cid parameter in corresponded slave device. The additional data for parameter request is taken from master parameter description table.

Application Example

The examples below use the FreeModbus library port for serial TCP slave and master implementations accordingly. The selection of stack is performed through KConfig menu option “Enable Modbus stack support ···” for appropriate communication mode and related configuration keys.

protocols/modbus/serial/mb_slave

protocols/modbus/serial/mb_master

protocols/modbus/tcp/mb_tcp_slave

protocols/modbus/tcp/mb_tcp_master

Please refer to the specific example README.md for details.

2.4.11 ESP Local Control

Overview

ESP Local Control (**esp_local_ctrl**) component in ESP-IDF provides capability to control an ESP device over Wi-Fi + HTTPS or BLE. It provides access to application defined **properties** that are available for reading / writing via a set of configurable handlers.

Initialization of the **esp_local_ctrl** service over BLE transport is performed as follows:

```
esp_local_ctrl_config_t config = {
    .transport = ESP_LOCAL_CTRL_TRANSPORT_BLE,
    .transport_config = {
        .ble = & (protocomm_ble_config_t) {
            .device_name  = SERVICE_NAME,
            .service_uuid = {
                /* LSB <---------------------------------------
                * ---------------------------------------> MSB */
                0x21, 0xd5, 0x3b, 0x8d, 0xbd, 0x75, 0x68, 0x8a,
                0xb4, 0x42, 0xeb, 0x31, 0x4a, 0x1e, 0x98, 0x3d
            }
        }
    },
    .proto_sec = {
        .version = PROTOCOM_SEC0,
        .custom_handle = NULL,
        .pop = NULL,
    },
    .handlers = {
        /* User defined handler functions */
        .get_prop_values = get_property_values,
        .set_prop_values = set_property_values,
        .usr_ctx         = NULL,
        .usr_ctx_free_fn = NULL
    },
    /* Maximum number of properties that may be set */
    .max_properties = 10
};

/* Start esp_local_ctrl service */
ESP_ERROR_CHECK(esp_local_ctrl_start(&config));
```

Similarly for HTTPS transport:

```
/* Set the configuration */
httpd_ssl_config_t https_conf = HTTPD_SSL_CONFIG_DEFAULT();

/* Load server certificate */
extern const unsigned char cacert_pem_start[] asm("_binary_cacert_pem_
↪start");
extern const unsigned char cacert_pem_end[]   asm("_binary_cacert_pem_end
↪");
https_conf.cacert_pem = cacert_pem_start;
https_conf.cacert_len = cacert_pem_end - cacert_pem_start;
```

(下页继续)

(续上页)

```
/* Load server private key */
extern const unsigned char prvtkey_pem_start[] asm("_binary_prvtkey_pem_
↪start");
extern const unsigned char prvtkey_pem_end[]   asm("_binary_prvtkey_pem_
↪end");
https_conf.prvtkey_pem = prvtkey_pem_start;
https_conf.prvtkey_len = prvtkey_pem_end - prvtkey_pem_start;

esp_local_ctrl_config_t config = {
    .transport = ESP_LOCAL_CTRL_TRANSPORT_HTTPD,
    .transport_config = {
        .httpd = &https_conf
    },
    .proto_sec = {
        .version = PROTOCOM_SEC0,
        .custom_handle = NULL,
        .pop = NULL,
    },
    .handlers = {
        /* User defined handler functions */
        .get_prop_values = get_property_values,
        .set_prop_values = set_property_values,
        .usr_ctx         = NULL,
        .usr_ctx_free_fn = NULL
    },
    /* Maximum number of properties that may be set */
    .max_properties = 10
};

/* Start esp_local_ctrl service */
ESP_ERROR_CHECK(esp_local_ctrl_start(&config));
```

You may set security for transport in ESP local control using following options:

1. *PROTOCOM_SEC1*: specifies that end to end encryption is used.
2. *PROTOCOM_SEC0*: specifies that data will be exchanged as a plain text.
3. *PROTOCOM_SEC_CUSTOM*: you can define your own security requirement. Please note that you will also have to provide *custom_handle* of type *protocomm_security_t* * in this context.

Creating a property

Now that we know how to start the **esp_local_ctrl** service, let's add a property to it. Each property must have a unique *name* (string), a *type* (e.g. enum), *flags* (bit fields) and *size*.

The *size* is to be kept 0, if we want our property value to be of variable length (e.g. if its a string or bytestream). For fixed length property value data-types, like int, float, etc., setting the *size* field to the right value, helps **esp_local_ctrl** to perform internal checks on arguments received with write requests.

The interpretation of *type* and *flags* fields is totally upto the application, hence they may be used as enumerations, bit-fields, or even simple integers. One way is to use *type* values to classify properties, while *flags* to specify characteristics of a property.

Here is an example property which is to function as a timestamp. It is assumed that the application defines *TYPE_TIMESTAMP* and *READONLY*, which are used for setting the *type* and *flags* fields here.

```
/* Create a timestamp property */
esp_local_ctrl_prop_t timestamp = {
    .name        = "timestamp",
    .type        = TYPE_TIMESTAMP,
```

(下页继续)

(续上页)

```
    .size         = sizeof(int32_t),
    .flags        = READONLY,
    .ctx          = func_get_time,
    .ctx_free_fn = NULL
};

/* Now register the property */
esp_local_ctrl_add_property(&timestamp);
```

Also notice that there is a ctx field, which is set to point to some custom *func_get_time()*. This can be used inside the property get / set handlers to retrieve timestamp.

Here is an example of *get_prop_values()* handler, which is used for retrieving the timestamp.

```
static esp_err_t get_property_values(size_t props_count,
                                     const esp_local_ctrl_prop_t *props,
                                     esp_local_ctrl_prop_val_t *prop_
↪values,
                                     void *usr_ctx)
{
    for (uint32_t i = 0; i < props_count; i++) {
        ESP_LOGI(TAG, "Reading %s", props[i].name);
        if (props[i].type == TYPE_TIMESTAMP) {
            /* Obtain the timer function from ctx */
            int32_t (*func_get_time)(void) = props[i].ctx;

            /* Use static variable for saving the value.
             * This is essential because the value has to be
             * valid even after this function returns.
             * Alternative is to use dynamic allocation
             * and set the free_fn field */
            static int32_t ts = func_get_time();
            prop_values[i].data = &ts;
        }
    }
    return ESP_OK;
}
```

Here is an example of *set_prop_values()* handler. Notice how we restrict from writing to read-only properties.

```
static esp_err_t set_property_values(size_t props_count,
                                     const esp_local_ctrl_prop_t *props,
                                     const esp_local_ctrl_prop_val_t␣
↪*prop_values,
                                     void *usr_ctx)
{
    for (uint32_t i = 0; i < props_count; i++) {
        if (props[i].flags & READONLY) {
            ESP_LOGE(TAG, "Cannot write to read-only property %s",␣
↪props[i].name);
            return ESP_ERR_INVALID_ARG;
        } else {
            ESP_LOGI(TAG, "Setting %s", props[i].name);

            /* For keeping it simple, lets only log the incoming data */
            ESP_LOG_BUFFER_HEX_LEVEL(TAG, prop_values[i].data,
                                     prop_values[i].size, ESP_LOG_INFO);
        }
    }
    return ESP_OK;
}
```

For complete example see protocols/esp_local_ctrl

Client Side Implementation

The client side implementation will have establish a protocomm session with the device first, over the supported mode of transport, and then send and receive protobuf messages understood by the **esp_local_ctrl** service. The service will translate these messages into requests and then call the appropriate handlers (set / get). Then, the generated response for each handler is again packed into a protobuf message and transmitted back to the client.

See below the various protobuf messages understood by the **esp_local_ctrl** service:

1. *get_prop_count* : This should simply return the total number of properties supported by the service
2. *get_prop_values* : This accepts an array of indices and should return the information (name, type, flags) and values of the properties corresponding to those indices
3. *set_prop_values* : This accepts an array of indices and an array of new values, which are used for setting the values of the properties corresponding to the indices

Note that indices may or may not be the same for a property, across multiple sessions. Therefore, the client must only use the names of the properties to uniquely identify them. So, every time a new session is established, the client should first call *get_prop_count* and then *get_prop_values*, hence form an index to name mapping for all properties. Now when calling *set_prop_values* for a set of properties, it must first convert the names to indexes, using the created mapping. As emphasized earlier, the client must refresh the index to name mapping every time a new session is established with the same device.

The various protocomm endpoints provided by **esp_local_ctrl** are listed below:

表 5: Endpoints provided by ESP Local Control

Endpoint Name (BLE + GATT Server)	URI (HTTPS Server + mDNS)	Description
esp_local_ctrl/version	https://<mdns-hostname>.local/esp_local_ctrl/version	Endpoint used for retrieving version string
esp_local_ctrl/control	https://<mdns-hostname>.local/esp_local_ctrl/control	Endpoint used for sending / receiving control messages

API Reference

Header File

- esp_local_ctrl/include/esp_local_ctrl.h

Functions

const *esp_local_ctrl_transport_t* ***esp_local_ctrl_get_transport_ble**(void)

Function for obtaining BLE transport mode.

const *esp_local_ctrl_transport_t* ***esp_local_ctrl_get_transport_httpd**(void)

Function for obtaining HTTPD transport mode.

esp_err_t **esp_local_ctrl_start**(**const** *esp_local_ctrl_config_t* **config*)

Start local control service.

Return

- ESP_OK : Success
- ESP_FAIL : Failure

Parameters

- `[in] config`: Pointer to configuration structure

esp_err_t **esp_local_ctrl_stop**(void)
Stop local control service.

esp_err_t **esp_local_ctrl_add_property**(**const** *esp_local_ctrl_prop_t* **prop*)
Add a new property.

This adds a new property and allocates internal resources for it. The total number of properties that could be added is limited by configuration option `max_properties`

Return
- ESP_OK : Success
- ESP_FAIL : Failure

Parameters
- `[in] prop`: Property description structure

esp_err_t **esp_local_ctrl_remove_property**(**const** char **name*)
Remove a property.

This finds a property by name, and releases the internal resources which are associated with it.

Return
- ESP_OK : Success
- ESP_ERR_NOT_FOUND : Failure

Parameters
- `[in] name`: Name of the property to remove

const *esp_local_ctrl_prop_t* ***esp_local_ctrl_get_property**(**const** char **name*)
Get property description structure by name.

This API may be used to get a property' s context structure `esp_local_ctrl_prop_t` when its name is known

Return
- Pointer to property
- NULL if not found

Parameters
- `[in] name`: Name of the property to find

esp_err_t **esp_local_ctrl_set_handler**(**const** char **ep_name*, *protocomm_req_handler_t handler*, void **user_ctx*)
Register protocomm handler for a custom endpoint.

This API can be called by the application to register a protocomm handler for an endpoint after the local control service has started.

Note In case of BLE transport the names and uuids of all custom endpoints must be provided beforehand as a part of the `protocomm_ble_config_t` structure set in `esp_local_ctrl_config_t`, and passed to `esp_local_ctrl_start()`.

Return
- ESP_OK : Success
- ESP_FAIL : Failure

Parameters
- `[in] ep_name`: Name of the endpoint
- `[in] handler`: Endpoint handler function
- `[in] user_ctx`: User data

Unions

union esp_local_ctrl_transport_config_t
#include <esp_local_ctrl.h> Transport mode (BLE / HTTPD) configuration.

Public Members

esp_local_ctrl_transport_config_ble_t ***ble**
This is same as `protocomm_ble_config_t`. See `protocomm_ble.h` for available configuration parameters.

esp_local_ctrl_transport_config_httpd_t ***httpd**
This is same as `httpd_ssl_config_t`. See `esp_https_server.h` for available configuration parameters.

Structures

struct esp_local_ctrl_prop
Property description data structure, which is to be populated and passed to the `esp_local_ctrl_add_property()` function.

Once a property is added, its structure is available for read-only access inside `get_prop_values()` and `set_prop_values()` handlers.

Public Members

char ***name**
Unique name of property

uint32_t **type**
Type of property. This may be set to application defined enums

size_t **size**
Size of the property value, which:

- if zero, the property can have values of variable size
- if non-zero, the property can have values of fixed size only, therefore, checks are performed internally by esp_local_ctrl when setting the value of such a property

uint32_t **flags**
Flags set for this property. This could be a bit field. A flag may indicate property behavior, e.g. read-only / constant

void ***ctx**
Pointer to some context data relevant for this property. This will be available for use inside the `get_prop_values` and `set_prop_values` handlers as a part of this property structure. When set, this is valid throughout the lifetime of a property, till either the property is removed or the esp_local_ctrl service is stopped.

void (***ctx_free_fn**)(void *ctx)
Function used by esp_local_ctrl to internally free the property context when `esp_local_ctrl_remove_property()` or `esp_local_ctrl_stop()` is called.

struct esp_local_ctrl_prop_val
Property value data structure. This gets passed to the `get_prop_values()` and `set_prop_values()` handlers for the purpose of retrieving or setting the present value of a property.

Public Members

void ***data**
Pointer to memory holding property value

size_t **size**
Size of property value

void (***free_fn**)(void *data)
This may be set by the application in `get_prop_values()` handler to tell `esp_local_ctrl`

to call this function on the data pointer above, for freeing its resources after sending the `get_prop_values` response.

struct esp_local_ctrl_handlers

Handlers for receiving and responding to local control commands for getting and setting properties.

Public Members

esp_err_t (***get_prop_values**) (size_t props_count, **const** *esp_local_ctrl_prop_t* props[], *esp_local_ctrl_prop_val_t* prop_values[], void *usr_ctx)

Handler function to be implemented for retrieving current values of properties.

Note If any of the properties have fixed sizes, the size field of corresponding element in `prop_values` need to be set

Return Returning different error codes will convey the corresponding protocol level errors to the client :

- ESP_OK : Success
- ESP_ERR_INVALID_ARG : InvalidArgument
- ESP_ERR_INVALID_STATE : InvalidProto
- All other error codes : InternalError

Parameters

- `[in] props_count`: Total elements in the props array
- `[in] props`: Array of properties, the current values for which have been requested by the client
- `[out] prop_values`: Array of empty property values, the elements of which need to be populated with the current values of those properties specified by props argument
- `[in] usr_ctx`: This provides value of the `usr_ctx` field of `esp_local_ctrl_handlers_t` structure

esp_err_t (***set_prop_values**) (size_t props_count, **const** *esp_local_ctrl_prop_t* props[], **const** *esp_local_ctrl_prop_val_t* prop_values[], void *usr_ctx)

Handler function to be implemented for changing values of properties.

Note If any of the properties have variable sizes, the size field of the corresponding element in `prop_values` must be checked explicitly before making any assumptions on the size.

Return Returning different error codes will convey the corresponding protocol level errors to the client :

- ESP_OK : Success
- ESP_ERR_INVALID_ARG : InvalidArgument
- ESP_ERR_INVALID_STATE : InvalidProto
- All other error codes : InternalError

Parameters

- `[in] props_count`: Total elements in the props array
- `[in] props`: Array of properties, the values for which the client requests to change
- `[in] prop_values`: Array of property values, the elements of which need to be used for updating those properties specified by props argument
- `[in] usr_ctx`: This provides value of the `usr_ctx` field of `esp_local_ctrl_handlers_t` structure

void ***usr_ctx**

Context pointer to be passed to above handler functions upon invocation. This is different from the property level context, as this is valid throughout the lifetime of the `esp_local_ctrl` service, and freed only when the service is stopped.

void (***usr_ctx_free_fn**) (void *usr_ctx)

Pointer to function which will be internally invoked on `usr_ctx` for freeing the context resources when `esp_local_ctrl_stop()` is called.

struct esp_local_ctrl_proto_sec_cfg

Protocom security configs

Public Members

esp_local_ctrl_proto_sec_t **version**
This sets protocom security version, sec0/sec1 or custom If custom, user must provide handle via `proto_sec_custom_handle` below

void ***custom_handle**
Custom security handle if security is set custom via `proto_sec` above This handle must follow `protocomm_security_t` signature

void ***pop**
Proof of possession to be used for local control. Could be NULL.

struct esp_local_ctrl_config
Configuration structure to pass to `esp_local_ctrl_start()`

Public Members

const *esp_local_ctrl_transport_t* ***transport**
Transport layer over which service will be provided

esp_local_ctrl_transport_config_t **transport_config**
Transport layer over which service will be provided

esp_local_ctrl_proto_sec_cfg_t **proto_sec**
Security version and POP

esp_local_ctrl_handlers_t **handlers**
Register handlers for responding to get/set requests on properties

size_t **max_properties**
This limits the number of properties that are available at a time

Macros

ESP_LOCAL_CTRL_TRANSPORT_BLE
ESP_LOCAL_CTRL_TRANSPORT_HTTPD

Type Definitions

typedef struct *esp_local_ctrl_prop* **esp_local_ctrl_prop_t**
Property description data structure, which is to be populated and passed to the `esp_local_ctrl_add_property()` function.

Once a property is added, its structure is available for read-only access inside `get_prop_values()` and `set_prop_values()` handlers.

typedef struct *esp_local_ctrl_prop_val* **esp_local_ctrl_prop_val_t**
Property value data structure. This gets passed to the `get_prop_values()` and `set_prop_values()` handlers for the purpose of retrieving or setting the present value of a property.

typedef struct *esp_local_ctrl_handlers* **esp_local_ctrl_handlers_t**
Handlers for receiving and responding to local control commands for getting and setting properties.

typedef struct esp_local_ctrl_transport **esp_local_ctrl_transport_t**
Transport mode (BLE / HTTPD) over which the service will be provided.

This is forward declaration of a private structure, implemented internally by `esp_local_ctrl`.

typedef struct *protocomm_ble_config* **esp_local_ctrl_transport_config_ble_t**
Configuration for transport mode BLE.

This is a forward declaration for `protocomm_ble_config_t`. To use this, application must set CONFIG_BT_BLUEDROID_ENABLED and include `protocomm_ble.h`.

typedef struct *httpd_ssl_config* **esp_local_ctrl_transport_config_httpd_t**
Configuration for transport mode HTTPD.

This is a forward declaration for `httpd_ssl_config_t`. To use this, application must set CONFIG_ESP_HTTPS_SERVER_ENABLE and include `esp_https_server.h`

typedef enum *esp_local_ctrl_proto_sec* **esp_local_ctrl_proto_sec_t**
Security types for esp_local_control.

typedef struct *esp_local_ctrl_proto_sec_cfg* **esp_local_ctrl_proto_sec_cfg_t**
Protocom security configs

typedef struct *esp_local_ctrl_config* **esp_local_ctrl_config_t**
Configuration structure to pass to `esp_local_ctrl_start()`

Enumerations

enum esp_local_ctrl_proto_sec
Security types for esp_local_control.

Values:

PROTOCOM_SEC0 = 0

PROTOCOM_SEC1

PROTOCOM_SEC_CUSTOM

2.4.12 ESP Serial Slave Link

Overview

Espressif provides several chips that can work as slaves. These slave devices rely on some common buses, and have their own communication protocols over those buses. The *esp_serial_slave_link* component is designed for the master to communicate with ESP slave devices through those protocols over the bus drivers.

After an *esp_serial_slave_link* device is initialized properly, the application can use it to communicate with the ESP slave devices conveniently.

Espressif Device protocols

For more details about Espressif device protocols, see the following documents.

Communication with ESP SDIO Slave This document describes the process of initialization of an ESP SDIO Slave device and then provides details on the ESP SDIO Slave protocol - a non-standard protocol that allows an SDIO Host to communicate with an ESP SDIO slave.

The ESP SDIO Slave protocol was created to implement the communication between SDIO host and slave, because the SDIO specification only shows how to access the custom region of a card (by sending CMD52 and CMD53 to Functions 1-7) without any details regarding the underlying hardware implementation.

SDIO Slave Capabilities of Espressif chips The services provided by the SDIO Slave peripheral of the ESP32 chip are listed in the table below:

Services	ESP32
SDIO slave	Y
Tohost intr	8
Frhost intr	8
TX DMA	Y
RX DMA	Y
Shared registers	56*

- * Not including the interrupt registers

ESP SDIO Slave Initialization The host should initialize the ESP32 SDIO slave according to the standard SDIO initialization process (Section 3.1.2 of SDIO Simplified Specification). In this specification as well as below, the SDIO slave is called an (SD)IO card. Here is a brief example of an ESP SDIO Slave initialization process:

1. **SDIO reset** CMD52 (Write 0x6=0x8)
2. **SD reset** CMD0
3. **Check whether IO card (optional)** CMD8
4. **Send SDIO op cond and wait for card ready** CMD5 arg = 0x00000000
   CMD5 arg = 0x00ff8000 (according to the response above, poll until ready)
   Example: Arg of R4 after first CMD5 (arg=0x00000000) is 0xXXFFFF00.
   Keep sending CMD5 with arg=0x00FFFF00 until the R4 shows card ready (arg bit 31=1).
5. **Set address** CMD3
6. **Select card** CMD7 (arg address according to CMD3 response)
   Example: Arg of R6 after CMD3 is 0x0001xxxx.
   Arg of CMD7 should be 0x00010000.
7. **Select 4-bit mode (optional)** CMD52 (Write 0x07=0x02)
8. **Enable func1** CMD52 (Write 0x02=0x02)
9. **Enable SDIO interrupt (required if interrupt line (DAT1) is used)** CMD52 (Write 0x04=0x03)
10. **Set Func0 blocksize (optional, default value is 512 (0x200))** CMD52/53 (Read 0x10~0x11)
    CMD52/53 (Write 0x10=0x00)
    CMD52/53 (Write 0x11=0x02)
    CMD52/53 (Read 0x10~0x11, read to check the final value)
11. **Set Func1 blocksize (optional, default value is 512 (0x200))** CMD52/53 (Read 0x110~0x111)
    CMD52/53 (Write 0x110=0x00)
    CMD52/53 (Write 0x111=0x02)
    CMD52/53 (Read 0x110~0x111, read to check the final value)

ESP SDIO Slave Protocol The ESP SDIO Slave protocol is based on the SDIO Specification's I/O Read/Write commands, i.e., CMD52 and CMD53. The protocol offers the following services:

- Sending FIFO and receiving FIFO
- 52 8-bit R/W registers shared by host and slave (For details, see *ESP32 Technical Reference Manual* > *SDIO Slave Controller* > *Register Summary* > SDIO SLC Host registers [PDF]
- 16 general purpose interrupt sources, 8 from host to slave and 8 from slave to host

To begin communication, the host needs to enable the I/O Function 1 in the slave and access its registers as described below.

Check the code example peripherals/sdio.

The *ESP Serial Slave Link* component implements the logic of this protocol for ESP32 SDIO Host when communicating with an ESP32 SDIO slave.

Slave register table

32-bit

- 0x044 (TOKEN_RDATA): in which bit 27-16 holds the number of the receiving buffer.

- 0x058 (INT_ST): holds the interrupt source bits from slave to host.
- 0x060 (PKT_LEN): holds the accumulated data length (in bytes) already read by host plus the data copied to the buffer but yet to be read.
- 0x0D4 (INT_CLR): write 1 to clear interrupt bits corresponding to INT_ST.
- 0x0DC (INT_ENA): mask bits for interrupts from slave to host.

8-bit Shared general purpose registers:

- 0x06C-0x077: R/W registers 0-11 shared by slave and host.
- 0x07A-0x07B: R/W registers 14-15 shared by slave and host.
- 0x07E-0x07F: R/W registers 18-19 shared by slave and host.
- 0x088-0x08B: R/W registers 24-27 shared by slave and host.
- 0x09C-0x0BB: R/W registers 32-63 shared by slave and host.

Interrupt Registers: - 0x08D (SLAVE_INT): bits for host to interrupt slave. auto clear.

FIFO (sending and receiving) 0x090 - 0x1F7FF are reserved for FIFOs.

The address of CMD53 is related to the length requested to read from or write to the slave in a single transfer, as demonstrated by the equation below:

requested length = 0x1F800-address

The slave will respond with data that has a length equal to the length field of CMD53. In cases where the data is longer than the *requested length*, the data will be zero filled (when sending) or discarded (when receiving). This includes both the block and the byte mode of CMD53.

注解： The function number should be set to 1, OP Code should be set to 1 (for CMD53).

In order to achieve higher efficiency when accessing the FIFO by an arbitrary length, the block and byte modes of CMD53 can be used in combination. For example, given that the block size is set to 512 by default, you can write/get 1031 bytes of data from the FIFO by doing the following:

1. Send CMD53 in block mode, block count=2 (1024 bytes) to address 0x1F3F9=0x1F800-**1031**.
2. Then send CMD53 in byte mode, byte count=8 (or 7 if your controller supports that) to address 0x1F7F9=0x1F800-**7**.

Interrupts SDIO interrupts are "level sensitive". For host interrupts, the slave sends an interrupt by pulling the DAT1 line down at a proper time. The host detects when the interrupt line is pulled down and reads the INT_ST register to determine the source of the interrupt. After that, the host can clear the interrupt bits by writing the INT_CLR register and process the interrupt. The host can also mask unneeded sources by clearing the bits in the INT_ENA register corresponding to the sources. If all the sources are cleared (or masked), the DAT1 line goes inactive.

On ESP32, the corresponding host_int bits are: bit 0 to bit 7.

For slave interrupts, the host sends a transfer to write the SLAVE_INT register. Once a bit is set to 1, the slave hardware and the driver will detect it and inform the application.

Receiving FIFO To write to the slave's receiving FIFO, the host should complete the following steps:

1. **Read the TOKEN1 field (bits 27-16) of the register TOKEN_RDATA (0x044)**. The buffer number remaining is TOKEN1 minus the number of buffers used by host.
2. **Make sure the buffer number is sufficient** (*buffer_size* x *buffer_num* is greater than the data to write, *buffer_size* is pre-defined between the host and the slave before the communication starts). Otherwise, keep returning to Step 1 until the buffer size is sufficient.
3. **Write to the FIFO address with CMD53**. Note that the *requested length* should not exceed the length calculated at Step 2, and the FIFO address is related to *requested length*.
4. **Calculate used buffers**. Note that a partially used buffer at the tail is counted as used.

Sending FIFO To read the slave's sending FIFO, the host should complete the following steps:

1. **Wait for the interrupt line to become active** (optional, low by default).
2. **Read (poll) the interrupt bits in the INT_ST register** to monitor if new packets exist.
3. **If new packets are ready, read the PKT_LEN register**. Before reading the packets, determine the length of data to be read. As the host keeps the length of data already read from the slave, subtract this value from PKT_LEN, the result will be the maximum length of data available for reading. If no data has been added to the sending FIFO yet, wait and poll until the slave is ready and update PKT_LEN.
4. **Read from the FIFO using CMD53**. Note that the *requested length* should not be greater than calculated at Step 3, and the FIFO address is related to *requested length*.
5. **Update the read length**.

警告： The driver for ESP32 hasn't been developed yet.

ESP SPI Slave HD (Half Duplex) Mode Protocol

SPI Slave Capabilities of Espressif chips

	ESP32	ESP32-S2	ESP32-C3
SPI Slave HD	N	Y (v2)	Y (v2)
Tohost intr		N	N
Frhost intr		2 *	2 *
TX DMA		Y	Y
RX DMA		Y	Y
Shared registers		72	64

Introduction In the half duplex mode, the master has to use the protocol defined by the slave to communicate with the slave. Each transaction may consists of the following phases (list by the order they should exist):

- Command: 8-bit, master to slave
  This phase determines the rest phases of the transactions. See *Supported Commands*.
- Address: 8-bit, master to slave, optional
  For some commands (WRBUF, RDBUF), this phase specifies the address of shared buffer to write to/read from. For other commands with this phase, they are meaningless, but still have to exist in the transaction.
- Dummy: 8-bit, floating, optional
  This phase is the turn around time between the master and the slave on the bus, and also provides enough time for the slave to prepare the data to send to master.
- Data: variable length, the direction is also determined by the command.
  This may be a data OUT phase, in which the direction is slave to master, or a data IN phase, in which the direction is master to slave.

The *direction* means which side (master or slave) controls the MOSI, MISO, WP and HD pins.

Data IO Modes In some IO modes, more data wires can be use to send the data. As a result, the SPI clock cycles required for the same amount of data will be less than in 1-bit mode. For example, in QIO mode, address and data (IN and OUT) should be sent on all 4 data wires (MOSI, MISO, WP, and HD). Here's the modes supported by ESP32-S2 SPI slave and the wire number used in corresponding modes.

Mode	command WN	address WN	dummy cycles	data WN
1-bit	1	1	1	1
DOUT	1	1	4	2
DIO	1	2	4	2
QOUT	1	1	4	4
QIO	1	4	4	4
QPI	4	4	4	4

Normally, which mode is used is determined is determined by the command sent by the master (See *Supported Commands*), except from the QPI mode.

QPI Mode The QPI mode is a special state of the SPI Slave. The master can send ENQPI command to put the slave into the QPI mode state. In the QPI mode, the command is also sent in 4-bit, thus it' s not compatible with the normal modes. The master should only send QPI commands when the slave is in the QPI mode. To exit form the QPI mode, master can send EXQPI command.

Supported Commands

注解: The command name are in a master-oriented direction. For example, WRBUF means master writes the buffer of slave.

Name	Description	Command	Address	Data
WRBUF	Write buffer	0x01	Buf addr	master to slave, no longer than buffer size
RDBUF	Read buffer	0x02	Buf addr	slave to master, no longer than buffer size
WRDMA	Write DMA	0x03	8 bits	master to slave, no longer than length provided by slave
RDDMA	Read DMA	0x04	8 bits	slave to master, no longer than length provided by slave
SEG_DONE	Segments done	0x05	•	•
ENQPI	Enter QPI mode	0x06	•	•
WR_DONE	Write segments done	0x07	•	•
CMD8	Interrupt	0x08	•	•
CMD9	Interrupt	0x09	•	•
CMDA	Interrupt	0x0A	•	•
EXQPI	Exit QPI mode	0xDD	•	•

Moreover, WRBUF, RDBUF, WRDMA, RDDMA commands have their 2-bit and 4-bit version. To do transactions in 2-bit or 4-bit mode, send the original command ORed by the corresponding command mask below. For example, command 0xA1 means WRBUF in QIO mode.

Mode	Mask
1-bit	0x00
DOUT	0x10
DIO	0x50
QOUT	0x20
QIO	0xA0
QPI	0xA0

Segment Transaction Mode Segment transaction mode is the only mode supported by the SPI Slave HD driver for now. In this mode, for a transaction the slave load onto the DMA, the master is allowed to read or write in segments. This way the master doesn't have to prepare large buffer as the size of data provided by the slave. After the master finish reading/writing a buffer, it has to send corresponding termination command to the slave as a synchronization signal. The slave driver will update new data (if exist) onto the DMA upon seeing the termination command.

The termination command is WR_DONE (0x07) for the WRDMA, and CMD8 (0x08) for the RDDMA.

Here's an example for the flow the master read data from the slave DMA:

1. The slave loads 4092 bytes of data onto the RDDMA
2. The master do seven RDDMA transactions, each of them are 512 bytes long, and reads the first 3584 bytes from the slave
3. The master do the last RDDMA transaction of 512 bytes (equal, longer or shorter than the total length loaded by the slave are all allowed). The first 508 bytes are valid data from the slave, while the last 4 bytes are meaningless bytes.
4. The master sends CMD8 to the slave
5. The slave loads another 4092 bytes of data onto the RDDMA
6. The master can start new reading transactions after it sends the CMD8

Terminology

- ESSL: Abbreviation for ESP Serial Slave Link, the component described by this document.
- Master: The device running the *esp_serial_slave_link* component.
- ESSL device: a virtual device on the master associated with an ESP slave device. The device context has the knowledge of the slave protocol above the bus, relying on some bus drivers to communicate with the slave.
- ESSL device handle: a handle to ESSL device context containing the configuration, status and data required by the ESSL component. The context stores the driver configurations, communication state, data shared by master and slave, etc.
  The context should be initialized before it is used, and get deinitialized if not used any more. The master application operates on the ESSL device through this handle.
- ESP slave: the slave device connected to the bus, which ESSL component is designed to communicate with.
- Bus: The bus over which the master and the slave communicate with each other.
- Slave protocol: The special communication protocol specified by Espressif HW/SW over the bus.
- TX buffer num: a counter, which is on the slave and can be read by the master, indicates the accumulated buffer numbers that the slave has loaded to the hardware to receive data from the master.
- RX data size: a counter, which is on the slave and can be read by the master, indicates the accumulated data size that the slave has loaded to the hardware to send to the master.

Services provided by ESP slave

There are some common services provided by the Espressif slaves:

1. Tohost Interrupts: The slave can inform the master about certain events by the interrupt line. (optional)
2. Frhost Interrupts: The master can inform the slave about certain events.
3. Tx FIFO (master to slave): the slave can send data in stream to the master. The SDIO slave can also indicate it has new data to send to master by the interrupt line.
   The slave updates the TX buffer num to inform the master how much data it can receive, and the master then read the TX buffer num, and take off the used buffer number to know how many buffers are remaining.

4. Rx FIFO (slave to master): the slave can receive data from the master in units of receiving buffers.
   The slave updates the RX data size to inform the master how much data it has prepared to send, and then the master read the data size, and take off the data length it has already received to know how many data is remaining.
5. Shared registers: the master can read some part of the registers on the slave, and also write these registers to let the slave read.

The services provided by the slave depends on the slave's model. See *SDIO Slave Capabilities of Espressif chips* and *SPI Slave Capabilities of Espressif chips* for more details.

Initialization of ESP Serial Slave Link

ESP SDIO Slave The ESP SDIO slave link (ESSL SDIO) devices relies on the sdmmc component. It includes the usage of communicating with ESP SDIO Slave device via SDSPI feature. The ESSL device should be initialized as below:

1. Initialize a sdmmc card (see :doc:' Document of SDMMC driver </api-reference/storage/sdmmc>') structure.
2. Call `sdmmc_card_init()` to initialize the card.
3. Initialize the ESSL device with `essl_sdio_config_t`. The *card* member should be the `sdmmc_card_t` got in step 2, and the *recv_buffer_size* member should be filled correctly according to pre-negotiated value.
4. Call `essl_init()` to do initialization of the SDIO part.
5. Call `essl_wait_for_ready()` to wait for the slave to be ready.

ESP SPI Slave

注解: If you are communicating with the ESP SDIO Slave device through SPI interface, you should use the *SDIO interface* instead.

Hasn't been supported yet.

APIs

After the initialization process above is performed, you can call the APIs below to make use of the services provided by the slave:

Tohost Interrupts (optional)

1. Call `essl_get_intr_ena()` to know which events will trigger the interrupts to the master.
2. Call `essl_set_intr_ena()` to set the events that will trigger interrupts to the master.
3. Call `essl_wait_int()` to wait until interrupt from the slave, or timeout.
4. When interrupt is triggered, call `essl_get_intr()` to know which events are active, and call `essl_clear_intr()` to clear them.

Frhost Interrupts

1. Call `essl_send_slave_intr()` to trigger general purpose interrupt of the slave.

TX FIFO

1. Call `essl_get_tx_buffer_num()` to know how many buffers the slave has prepared to receive data from the master. This is optional. The master will poll *tx_buffer_num* when it try to send packets to the slave, until the slave has enough buffer or timeout.
2. Call `essl_send_paket()` to send data to the slave.

RX FIFO

1. Call `essl_get_rx_data_size()` to know how many data the slave has prepared to send to the master. This is optional. When the master tries to receive data from the slave, it will update the *rx_data_size* for once, if the current *rx_data_size* is shorter than the buffer size the master prepared to receive. And it may poll the *rx_data_size* if the *rx_dat_size* keeps 0, until timeout.
2. Call `essl_get_packet()` to receive data from the slave.

Reset counters (Optional) Call `essl_reset_cnt()` to reset the internal counter if you find the slave has reset its counter.

Application Example

The example below shows how ESP32 SDIO host and slave communicate with each other. The host use the ESSL SDIO.

peripherals/sdio.

Please refer to the specific example README.md for details.

API Reference

Header File

- esp_serial_slave_link/include/esp_serial_slave_link/essl.h

Functions

esp_err_t **essl_init** (*essl_handle_t handle*, uint32_t *wait_ms*)

Initialize the slave.

Return

- ESP_OK: If success
- ESP_ERR_NOT_SUPPORTED: Current device does not support this function.
- Other value returned from lower layer `init`.

Parameters

- `handle`: Handle of a `essl` device.
- `wait_ms`: Millisecond to wait before timeout, will not wait at all if set to 0-9.

esp_err_t **essl_wait_for_ready** (*essl_handle_t handle*, uint32_t *wait_ms*)

Wait for interrupt of an ESSL slave device.

Return

- ESP_OK: If success
- ESP_ERR_NOT_SUPPORTED: Current device does not support this function.
- One of the error codes from SDMMC host controller

Parameters

- `handle`: Handle of a `essl` device.
- `wait_ms`: Millisecond to wait before timeout, will not wait at all if set to 0-9.

esp_err_t **essl_get_tx_buffer_num** (*essl_handle_t handle*, uint32_t **out_tx_num*, uint32_t *wait_ms*)

Get buffer num for the host to send data to the slave. The buffers are size of `buffer_size`.

Return

- ESP_OK: Success
- ESP_ERR_NOT_SUPPORTED: This API is not supported in this mode
- One of the error codes from SDMMC/SPI host controller

Parameters

- `handle`: Handle of an ESSL device.
- `out_tx_num`: Output of buffer num that host can send data to ESSL slave.
- `wait_ms`: Millisecond to wait before timeout, will not wait at all if set to 0-9.

esp_err_t **essl_get_rx_data_size** (*essl_handle_t handle*, uint32_t **out_rx_size*, uint32_t *wait_ms*)

Get the size, in bytes, of the data that the ESSL slave is ready to send

Return

- ESP_OK: Success
- ESP_ERR_NOT_SUPPORTED: This API is not supported in this mode
- One of the error codes from SDMMC/SPI host controller

Parameters

- `handle`: Handle of an ESSL device.
- `out_rx_size`: Output of data size to read from slave, in bytes
- `wait_ms`: Millisecond to wait before timeout, will not wait at all if set to 0-9.

esp_err_t **essl_reset_cnt** (*essl_handle_t handle*)

Reset the counters of this component. Usually you don't need to do this unless you know the slave is reset.

Return

- ESP_OK: Success
- ESP_ERR_NOT_SUPPORTED: This API is not supported in this mode
- ESP_ERR_INVALID_ARG: Invalid argument, handle is not init.

Parameters

- `handle`: Handle of an ESSL device.

esp_err_t **essl_send_packet** (*essl_handle_t handle*, **const** void **start*, size_t *length*, uint32_t *wait_ms*)

Send a packet to the ESSL Slave. The Slave receives the packet into buffers whose size is `buffer_size` (configured during initialization).

Return

- ESP_OK Success
- ESP_ERR_INVALID_ARG: Invalid argument, handle is not init or other argument is not valid.
- ESP_ERR_TIMEOUT: No buffer to use, or error ftrom SDMMC host controller.
- ESP_ERR_NOT_FOUND: Slave is not ready for receiving.
- ESP_ERR_NOT_SUPPORTED: This API is not supported in this mode
- One of the error codes from SDMMC/SPI host controller.

Parameters

- `handle`: Handle of a `essl` device.
- `start`: Start address of the packet to send
- `length`: Length of data to send, if the packet is over-size, the it will be divided into blocks and hold into different buffers automatically.
- `wait_ms`: Millisecond to wait before timeout, will not wait at all if set to 0-9.

esp_err_t **essl_get_packet** (*essl_handle_t handle*, void **out_data*, size_t *size*, size_t **out_length*, uint32_t *wait_ms*)

Get a packet from ESSL slave.

Return

- ESP_OK Success: All the data has been read from the slave.
- ESP_ERR_INVALID_ARG: Invalid argument, The handle is not initialized or the other arguments are invalid.
- ESP_ERR_NOT_FINISHED: Read was successful, but there is still data remaining.
- ESP_ERR_NOT_FOUND: Slave is not ready to send data.
- ESP_ERR_NOT_SUPPORTED: This API is not supported in this mode
- One of the error codes from SDMMC/SPI host controller.

Parameters

- `handle`: Handle of a `essl` device.
- `[out] out_data`: Data output address
- `size`: The size of the output buffer, if the buffer is smaller than the size of data to receive from slave, the driver returns `ESP_ERR_NOT_FINISHED`
- `[out] out_length`: Output of length the data actually received from slave.
- `wait_ms`: Millisecond to wait before timeout, will not wait at all if set to 0-9.

esp_err_t **essl_write_reg** (*essl_handle_t handle*, uint8_t *addr*, uint8_t *value*, uint8_t **value_o*, uint32_t *wait_ms*)

Write general purpose R/W registers (8-bit) of ESSL slave.

Note sdio 28-31 are reserved, the lower API helps to skip.

Return

- ESP_OK Success
- One of the error codes from SDMMC/SPI host controller

Parameters

- `handle`: Handle of an ESSL device.
- `addr`: Address of register to write. For SDIO, valid address: 0-59. For SPI, see `essl_spi.h`
- `value`: Value to write to the register.
- `value_o`: Output of the returned written value.
- `wait_ms`: Millisecond to wait before timeout, will not wait at all if set to 0-9.

esp_err_t **essl_read_reg** (*essl_handle_t handle*, uint8_t *add*, uint8_t **value_o*, uint32_t *wait_ms*)

Read general purpose R/W registers (8-bit) of ESSL slave.

Return

- ESP_OK Success
- One of the error codes from SDMMC/SPI host controller

Parameters

- `handle`: Handle of a `essl` device.
- `add`: Address of register to read. For SDIO, Valid address: 0-27, 32-63 (28-31 reserved, return interrupt bits on read). For SPI, see `essl_spi.h`
- `value_o`: Output value read from the register.
- `wait_ms`: Millisecond to wait before timeout, will not wait at all if set to 0-9.

esp_err_t **essl_wait_int** (*essl_handle_t handle*, uint32_t *wait_ms*)

wait for an interrupt of the slave

Return

- ESP_OK: If interrupt is triggered.
- ESP_ERR_NOT_SUPPORTED: Current device does not support this function.
- ESP_ERR_TIMEOUT: No interrupts before timeout.

Parameters

- `handle`: Handle of a `essl` device.
- `wait_ms`: Millisecond to wait before timeout, will not wait at all if set to 0-9.

esp_err_t **essl_clear_intr** (*essl_handle_t handle*, uint32_t *intr_mask*, uint32_t *wait_ms*)

Clear interrupt bits of ESSL slave. All the bits set in the mask will be cleared, while other bits will stay the same.

Return

- ESP_OK: Success
- ESP_ERR_NOT_SUPPORTED: Current device does not support this function.
- One of the error codes from SDMMC host controller

Parameters

- `handle`: Handle of a `essl` device.
- `intr_mask`: Mask of interrupt bits to clear.
- `wait_ms`: Millisecond to wait before timeout, will not wait at all if set to 0-9.

esp_err_t **essl_get_intr** (*essl_handle_t handle*, uint32_t **intr_raw*, uint32_t **intr_st*, uint32_t *wait_ms*)

Get interrupt bits of ESSL slave.

Return

- ESP_OK: Success
- ESP_INVALID_ARG: If both `intr_raw` and `intr_st` are NULL.
- ESP_ERR_NOT_SUPPORTED: Current device does not support this function.
- One of the error codes from SDMMC host controller

Parameters

- `handle`: Handle of a `essl` device.
- `intr_raw`: Output of the raw interrupt bits. Set to NULL if only masked bits are read.
- `intr_st`: Output of the masked interrupt bits. set to NULL if only raw bits are read.
- `wait_ms`: Millisecond to wait before timeout, will not wait at all if set to 0-9.

esp_err_t **essl_set_intr_ena** (*essl_handle_t handle*, uint32_t *ena_mask*, uint32_t *wait_ms*)

Set interrupt enable bits of ESSL slave. The slave only sends interrupt on the line when there is a bit both the raw status and the enable are set.

Return

- ESP_OK: Success
- ESP_ERR_NOT_SUPPORTED: Current device does not support this function.
- One of the error codes from SDMMC host controller

Parameters

- `handle`: Handle of a `essl` device.
- `ena_mask`: Mask of the interrupt bits to enable.
- `wait_ms`: Millisecond to wait before timeout, will not wait at all if set to 0-9.

esp_err_t **essl_get_intr_ena** (*essl_handle_t handle*, uint32_t **ena_mask_o*, uint32_t *wait_ms*)

Get interrupt enable bits of ESSL slave.

Return

- ESP_OK Success
- One of the error codes from SDMMC host controller

Parameters

- `handle`: Handle of a `essl` device.
- `ena_mask_o`: Output of interrupt bit enable mask.
- `wait_ms`: Millisecond to wait before timeout, will not wait at all if set to 0-9.

esp_err_t **essl_send_slave_intr** (*essl_handle_t handle*, uint32_t *intr_mask*, uint32_t *wait_ms*)

Send interrupts to slave. Each bit of the interrupt will be triggered.

Return

- ESP_OK: Success
- ESP_ERR_NOT_SUPPORTED: Current device does not support this function.
- One of the error codes from SDMMC host controller

Parameters

- `handle`: Handle of a `essl` device.
- `intr_mask`: Mask of interrupt bits to send to slave.
- `wait_ms`: Millisecond to wait before timeout, will not wait at all if set to 0-9.

Macros

ESP_ERR_NOT_FINISHED

There is still remaining data.

Type Definitions

typedef struct essl_dev_t ***essl_handle_t**

Handle of an ESSL device.

Header File

- esp_serial_slave_link/include/esp_serial_slave_link/essl_sdio.h

Functions

esp_err_t **essl_sdio_init_dev** (*essl_handle_t *out_handle*, **const** *essl_sdio_config_t *config*)

Initialize the ESSL SDIO device and get its handle.

Return

- ESP_OK: on success
- ESP_ERR_NO_MEM: memory exhausted.

Parameters

- `out_handle`: Output of the handle.
- `config`: Configuration for the ESSL SDIO device.

esp_err_t **essl_sdio_deinit_dev**(*essl_handle_t handle*)

Deinitialize and free the space used by the ESSL SDIO device.

Return

- ESP_OK: on success
- ESP_ERR_INVALID_ARG: wrong handle passed

Parameters

- `handle`: Handle of the ESSL SDIO device to deinit.

Structures

struct essl_sdio_config_t

Configuration for the essl SDIO device.

Public Members

sdmmc_card_t ***card**

The initialized sdmmc card pointer of the slave.

int **recv_buffer_size**

The pre-negotiated recv buffer size used by both the host and the slave.

Header File

- esp_serial_slave_link/include/esp_serial_slave_link/essl_spi.h

Functions

esp_err_t **essl_spi_init_dev**(*essl_handle_t* ***out_handle**, **const** *essl_spi_config_t* ***init_config**)

Initialize the ESSL SPI device function list and get its handle.

Return

- ESP_OK: On success
- ESP_ERR_NO_MEM: Memory exhausted
- ESP_ERR_INVALID_STATE: SPI driver is not initialized
- ESP_ERR_INVALID_ARG: Wrong register ID

Parameters

- `[out] out_handle`: Output of the handle
- `init_config`: Configuration for the ESSL SPI device

esp_err_t **essl_spi_deinit_dev**(*essl_handle_t handle*)

Deinitialize the ESSL SPI device and free the memory used by the device.

Return

- ESP_OK: On success
- ESP_ERR_INVALID_STATE: ESSL SPI is not in use

Parameters

- `handle`: Handle of the ESSL SPI device

esp_err_t **essl_spi_read_reg**(void **arg*, uint8_t *addr*, uint8_t **out_value*, uint32_t *wait_ms*)

Read from the shared registers.

Note The registers for Master/Slave synchronization are reserved. Do not use them. (see `rx_sync_reg` in *`essl_spi_config_t`*)

Return

- ESP_OK: success
- ESP_ERR_INVALID_STATE: ESSL SPI has not been initialized.
- ESP_ERR_INVALID_ARG: The address argument is not valid. See note 1.
- or other return value from :cpp:func:`spi_device_transmit`.

Parameters

- `arg`: Context of the component. (Member `arg` from `essl_handle_t`)

- addr: Address of the shared registers. (Valid: 0 ~ SOC_SPI_MAXIMUM_BUFFER_SIZE, registers for M/S sync are reserved, see note1).
- [out] out_value: Read buffer for the shared registers.
- wait_ms: Time to wait before timeout (reserved for future use, user should set this to 0).

esp_err_t **essl_spi_get_packet**(void **arg*, void **out_data*, size_t *size*, uint32_t *wait_ms*)

Get a packet from Slave.

Return

- ESP_OK: On Success
- ESP_ERR_INVALID_STATE: ESSL SPI has not been initialized.
- ESP_ERR_INVALID_ARG: The output data address is neither DMA capable nor 4 byte-aligned
- ESP_ERR_INVALID_SIZE: Master requires size bytes of data but Slave did not load enough bytes.

Parameters

- arg: Context of the component. (Member arg from essl_handle_t)
- [out] out_data: Output data address
- size: The size of the output data.
- wait_ms: Time to wait before timeout (reserved for future use, user should set this to 0).

esp_err_t **essl_spi_write_reg**(void **arg*, uint8_t *addr*, uint8_t *value*, uint8_t **out_value*, uint32_t *wait_ms*)

Write to the shared registers.

Note The registers for Master/Slave synchronization are reserved. Do not use them. (see tx_sync_reg in *essl_spi_config_t*)

Note Feature of checking the actual written value (out_value) is not supported.

Return

- ESP_OK: success
- ESP_ERR_INVALID_STATE: ESSL SPI has not been initialized.
- ESP_ERR_INVALID_ARG: The address argument is not valid. See note 1.
- ESP_ERR_NOT_SUPPORTED: Should set out_value to NULL. See note 2.
- or other return value from :cpp:func:spi_device_transmit.

Parameters

- arg: Context of the component. (Member arg from essl_handle_t)
- addr: Address of the shared registers. (Valid: 0 ~ SOC_SPI_MAXIMUM_BUFFER_SIZE, registers for M/S sync are reserved, see note1)
- value: Buffer for data to send, should be align to 4.
- [out] out_value: Not supported, should be set to NULL.
- wait_ms: Time to wait before timeout (reserved for future use, user should set this to 0).

esp_err_t **essl_spi_send_packet**(void **arg*, **const** void **data*, size_t *size*, uint32_t *wait_ms*)

Send a packet to Slave.

Return

- ESP_OK: On success
- ESP_ERR_INVALID_STATE: ESSL SPI has not been initialized.
- ESP_ERR_INVALID_ARG: The data address is not DMA capable
- ESP_ERR_INVALID_SIZE: Master will send size bytes of data but Slave did not load enough RX buffer

Parameters

- arg: Context of the component. (Member arg from essl_handle_t)
- data: Address of the data to send
- size: Size of the data to send.
- wait_ms: Time to wait before timeout (reserved for future use, user should set this to 0).

void **essl_spi_reset_cnt**(void **arg*)

Reset the counter in Master context.

Note Shall only be called if the slave has reset its counter. Else, Slave and Master would be desynchronized

Parameters

- arg: Context of the component. (Member arg from essl_handle_t)

esp_err_t **essl_spi_rdbuf**(*spi_device_handle_t spi*, uint8_t **out_data*, int *addr*, int *len*, uint32_t *flags*)

Read the shared buffer from the slave in ISR way.

Note The slave's HW doesn't guarantee the data in one SPI transaction is consistent. It sends data in unit of byte. In other words, if the slave SW attempts to update the shared register when a rdbuf SPI transaction is in-flight, the data got by the master will be the combination of bytes of different writes of slave SW.

Note `out_data` should be prepared in words and in the DRAM. The buffer may be written in words by the DMA. When a byte is written, the remaining bytes in the same word will also be overwritten, even the `len` is shorter than a word.

Return

- ESP_OK: on success
- or other return value from :cpp:func:`spi_device_transmit`.

Parameters

- `spi`: SPI device handle representing the slave
- `[out] out_data`: Buffer for read data, strongly suggested to be in the DRAM and aligned to 4
- `addr`: Address of the slave shared buffer
- `len`: Length to read
- `flags`: `SPI_TRANS_*` flags to control the transaction mode of the transaction to send.

esp_err_t **essl_spi_rdbuf_polling**(*spi_device_handle_t spi*, uint8_t **out_data*, int *addr*, int *len*, uint32_t *flags*)

Read the shared buffer from the slave in polling way.

Note `out_data` should be prepared in words and in the DRAM. The buffer may be written in words by the DMA. When a byte is written, the remaining bytes in the same word will also be overwritten, even the `len` is shorter than a word.

Return

- ESP_OK: on success
- or other return value from :cpp:func:`spi_device_transmit`.

Parameters

- `spi`: SPI device handle representing the slave
- `[out] out_data`: Buffer for read data, strongly suggested to be in the DRAM and aligned to 4
- `addr`: Address of the slave shared buffer
- `len`: Length to read
- `flags`: `SPI_TRANS_*` flags to control the transaction mode of the transaction to send.

esp_err_t **essl_spi_wrbuf**(*spi_device_handle_t spi*, **const** uint8_t **data*, int *addr*, int *len*, uint32_t *flags*)

Write the shared buffer of the slave in ISR way.

Note `out_data` should be prepared in words and in the DRAM. The buffer may be written in words by the DMA. When a byte is written, the remaining bytes in the same word will also be overwritten, even the `len` is shorter than a word.

Return

- ESP_OK: success
- or other return value from :cpp:func:`spi_device_transmit`.

Parameters

- `spi`: SPI device handle representing the slave
- `data`: Buffer for data to send, strongly suggested to be in the DRAM
- `addr`: Address of the slave shared buffer,
- `len`: Length to write
- `flags`: `SPI_TRANS_*` flags to control the transaction mode of the transaction to send.

esp_err_t **essl_spi_wrbuf_polling**(*spi_device_handle_t spi*, **const** uint8_t **data*, int *addr*, int *len*, uint32_t *flags*)

Write the shared buffer of the slave in polling way.

Note `out_data` should be prepared in words and in the DRAM. The buffer may be written in words by the DMA. When a byte is written, the remaining bytes in the same word will also be overwritten, even the `len` is shorter than a word.

Return

- ESP_OK: success

- or other return value from :cpp:func:`spi_device_polling_transmit`.

Parameters

- `spi`: SPI device handle representing the slave
- `data`: Buffer for data to send, strongly suggested to be in the DRAM
- `addr`: Address of the slave shared buffer,
- `len`: Length to write
- `flags`: `SPI_TRANS_*` flags to control the transaction mode of the transaction to send.

esp_err_t **essl_spi_rddma**(*spi_device_handle_t spi*, uint8_t **out_data*, int *len*, int *seg_len*, uint32_t *flags*)

Receive long buffer in segments from the slave through its DMA.

Note This function combines several :cpp:func:`essl_spi_rddma_seg` and one :cpp:func:`essl_spi_rddma_done` at the end. Used when the slave is working in segment mode.

Return

- ESP_OK: success
- or other return value from :cpp:func:`spi_device_transmit`.

Parameters

- `spi`: SPI device handle representing the slave
- `[out] out_data`: Buffer to hold the received data, strongly suggested to be in the DRAM and aligned to 4
- `len`: Total length of data to receive.
- `seg_len`: Length of each segment, which is not larger than the maximum transaction length allowed for the spi device. Suggested to be multiples of 4. When set < 0, means send all data in one segment (the `rddma_done` will still be sent.)
- `flags`: `SPI_TRANS_*` flags to control the transaction mode of the transaction to send.

esp_err_t **essl_spi_rddma_seg**(*spi_device_handle_t spi*, uint8_t **out_data*, int *seg_len*, uint32_t *flags*)

Read one data segment from the slave through its DMA.

Note To read long buffer, call :cpp:func:`essl_spi_rddma` instead.

Return

- ESP_OK: success
- or other return value from :cpp:func:`spi_device_transmit`.

Parameters

- `spi`: SPI device handle representing the slave
- `[out] out_data`: Buffer to hold the received data. strongly suggested to be in the DRAM and aligned to 4
- `seg_len`: Length of this segment
- `flags`: `SPI_TRANS_*` flags to control the transaction mode of the transaction to send.

esp_err_t **essl_spi_rddma_done**(*spi_device_handle_t spi*, uint32_t *flags*)

Send the `rddma_done` command to the slave. Upon receiving this command, the slave will stop sending the current buffer even there are data unsent, and maybe prepare the next buffer to send.

Note This is required only when the slave is working in segment mode.

Return

- ESP_OK: success
- or other return value from :cpp:func:`spi_device_transmit`.

Parameters

- `spi`: SPI device handle representing the slave
- `flags`: `SPI_TRANS_*` flags to control the transaction mode of the transaction to send.

esp_err_t **essl_spi_wrdma**(*spi_device_handle_t spi*, **const** uint8_t **data*, int *len*, int *seg_len*, uint32_t *flags*)

Send long buffer in segments to the slave through its DMA.

Note This function combines several :cpp:func:`essl_spi_wrdma_seg` and one :cpp:func:`essl_spi_wrdma_done` at the end. Used when the slave is working in segment mode.

Return

- ESP_OK: success
- or other return value from :cpp:func:`spi_device_transmit`.

Parameters

- `spi`: SPI device handle representing the slave
- `data`: Buffer for data to send, strongly suggested to be in the DRAM
- `len`: Total length of data to send.
- `seg_len`: Length of each segment, which is not larger than the maximum transaction length allowed for the spi device. Suggested to be multiples of 4. When set < 0, means send all data in one segment (the `wrdma_done` will still be sent.)
- `flags`: `SPI_TRANS_*` flags to control the transaction mode of the transaction to send.

esp_err_t **essl_spi_wrdma_seg**(*spi_device_handle_t spi*, **const** uint8_t **data*, int *seg_len*, uint32_t *flags*)

Send one data segment to the slave through its DMA.

Note To send long buffer, call :cpp:func:`essl_spi_wrdma` instead.

Return

- ESP_OK: success
- or other return value from :cpp:func:`spi_device_transmit`.

Parameters

- `spi`: SPI device handle representing the slave
- `data`: Buffer for data to send, strongly suggested to be in the DRAM
- `seg_len`: Length of this segment
- `flags`: `SPI_TRANS_*` flags to control the transaction mode of the transaction to send.

esp_err_t **essl_spi_wrdma_done**(*spi_device_handle_t spi*, uint32_t *flags*)

Send the `wrdma_done` command to the slave. Upon receiving this command, the slave will stop receiving, process the received data, and maybe prepare the next buffer to receive.

Note This is required only when the slave is working in segment mode.

Return

- ESP_OK: success
- or other return value from :cpp:func:`spi_device_transmit`.

Parameters

- `spi`: SPI device handle representing the slave
- `flags`: `SPI_TRANS_*` flags to control the transaction mode of the transaction to send.

Structures

struct essl_spi_config_t

Configuration of ESSL SPI device.

Public Members

spi_device_handle_t ***spi**

Pointer to SPI device handle.

uint32_t **tx_buf_size**

The pre-negotiated Master TX buffer size used by both the host and the slave.

uint8_t **tx_sync_reg**

The pre-negotiated register ID for Master-TX-SLAVE-RX synchronization. 1 word (4 Bytes) will be reserved for the synchronization.

uint8_t **rx_sync_reg**

The pre-negotiated register ID for Master-RX-Slave-TX synchronization. 1 word (4 Bytes) will be reserved for the synchronization.

2.4.13 ESP x509 Certificate Bundle

Overview

The ESP x509 Certificate Bundle API provides an easy way to include a bundle of custom x509 root certificates for TLS server verification.

注解： The bundle is currently not available when using WolfSSL.

The bundle comes with the complete list of root certificates from Mozilla's NSS root certificate store. Using the gen_crt_bundle.py python utility the certificates' subject name and public key are stored in a file and embedded in the ESP32 binary.

When generating the bundle you may choose between:

- The full root certificate bundle from Mozilla, containing more than 130 certificates. The current bundle was updated Tue Apr 26 03:12:05 2022 GMT.
- A pre-selected filter list of the name of the most commonly used root certificates, reducing the amount of certificates to around 35 while still having around 90 % coverage according to market share statistics.

In addition it is possible to specify a path to a certificate file or a directory containing certificates which then will be added to the generated bundle.

注解： Trusting all root certificates means the list will have to be updated if any of the certificates are retracted. This includes removing them from *cacrt_all.pem*.

Configuration

Most configuration is done through menuconfig. Make and CMake will generate the bundle according to the configuration and embed it.

- *CONFIG_MBEDTLS_CERTIFICATE_BUNDLE*: automatically build and attach the bundle.
- *CONFIG_MBEDTLS_DEFAULT_CERTIFICATE_BUNDLE*: decide which certificates to include from the complete root list.
- *CONFIG_MBEDTLS_CUSTOM_CERTIFICATE_BUNDLE_PATH*: specify the path of any additional certificates to embed in the bundle.

To enable the bundle when using ESP-TLS simply pass the function pointer to the bundle attach function:

```
esp_tls_cfg_t cfg = {
     .crt_bundle_attach = esp_crt_bundle_attach,
};
```

This is done to avoid embedding the certificate bundle unless activated by the user.

If using mbedTLS directly then the bundle may be activated by directly calling the attach function during the setup process:

```
mbedtls_ssl_config conf;
mbedtls_ssl_config_init(&conf);

esp_crt_bundle_attach(&conf);
```

Generating the List of Root Certificates

The list of root certificates comes from Mozilla's NSS root certificate store, which can be found here The list can be downloaded and created by running the script `mk-ca-bundle.pl` that is distributed as a part of curl. Another alternative would be to download the finished list directly from the curl website: CA certificates extracted from Mozilla

The common certificates bundle were made by selecting the authorities with a market share of more than 1 % from w3tech's SSL Survey. These authorities were then used to pick the names of the certificates for the filter list, *cmn_crt_authorities.csv*, from this list provided by Mozilla.

Updating the Certificate Bundle

The bundle is embedded into the app and can be updated along with the app by an OTA update. If you want to include a more up-to-date bundle than the bundle currently included in IDF, then the certificate list can be downloaded from Mozilla as described in *Updating the Certificate Bundle*.

Application Example

Simple HTTPS example that uses ESP-TLS to establish a secure socket connection using the certificate bundle with two custom certificates added for verification: protocols/https_x509_bundle.

HTTPS example that uses ESP-TLS and the default bundle: protocols/https_request.

HTTPS example that uses mbedTLS and the default bundle: protocols/https_mbedtls.

API Reference

Header File

- mbedtls/esp_crt_bundle/include/esp_crt_bundle.h

Functions

esp_err_t **esp_crt_bundle_attach** (void **conf*)

Attach and enable use of a bundle for certificate verification.

Attach and enable use of a bundle for certificate verification through a verification callback. If no specific bundle has been set through esp_crt_bundle_set() it will default to the bundle defined in menuconfig and embedded in the binary.

Return

- ESP_OK if adding certificates was successful.
- Other if an error occured or an action must be taken by the calling process.

Parameters

- `[in] conf`: The config struct for the SSL connection.

void **esp_crt_bundle_detach** (mbedtls_ssl_config **conf*)

Disable and dealloc the certification bundle.

Removes the certificate verification callback and deallocates used resources

Parameters

- `[in] conf`: The config struct for the SSL connection.

esp_err_t **esp_crt_bundle_set** (**const** uint8_t **x509_bundle*, size_t *bundle_size*)

Set the default certificate bundle used for verification.

Overrides the default certificate bundle only in case of successful initialization. In most use cases the bundle should be set through menuconfig. The bundle needs to be sorted by subject name since binary search is used to find certificates.

Return

- ESP_OK if adding certificates was successful.
- Other if an error occured or an action must be taken by the calling process.

Parameters

- `[in] x509_bundle`: A pointer to the certificate bundle.
- `[in] bundle_size`: Size of the certificate bundle in bytes.

此 API 部分的示例代码在 ESP-IDF 示例工程的 protocols 目录下提供。

2.4.14 IP 网络层协议

IP 网络层协议（应用层协议之下）的文档位于连网 *API* 。

2.5 配网 API

2.5.1 Unified Provisioning

Overview

Unified provisioning support in the ESP-IDF provides an extensible mechanism to the developers to configure the device with the Wi-Fi credentials and/or other custom configuration using various transports and different security schemes. Depending on the use-case it provides a complete and ready solution for Wi-Fi network provisioning along with example iOS and Android applications. Or developers can extend the device-side and phone-app side implementations to accommodate their requirements for sending additional configuration data. Following are the important features of this implementation.

1. *Extensible Protocol:* The protocol is completely flexible and it offers the ability for the developers to send custom configuration in the provisioning process. The data representation too is left to the application to decide.
2. *Transport Flexibility:* The protocol can work on Wi-Fi (SoftAP + HTTP server) or on BLE as a transport protocol. The framework provides an ability to add support for any other transport easily as long as command-response behaviour can be supported on the transport.
3. *Security Scheme Flexibility:* It's understood that each use-case may require different security scheme to secure the data that is exchanged in the provisioning process. Some applications may work with SoftAP that's WPA2 protected or BLE with "just-works" security. Or the applications may consider the transport to be insecure and may want application level security. The unified provisioning framework allows application to choose the security as deemed suitable.
4. *Compact Data Representation:* The protocol uses Google Protobufs as a data representation for session setup and Wi-Fi provisioning. They provide a compact data representation and ability to parse the data in multiple programming languages in native format. Please note that this data representation is not forced on application specific data and the developers may choose the representation of their choice.

Typical Provisioning Process

Deciding on Transport

Unified provisioning subsystem supports Wi-Fi (SoftAP+HTTP server) and BLE (GATT based) transport schemes. Following points need to be considered while selecting the best possible transport for provisioning.

1. BLE based transport has an advantage that in the provisioning process, the BLE communication channel stays intact between the device and the client. That provides reliable provisioning feedback.
2. BLE based provisioning implementation makes the user-experience better from the phone apps as on Android and iOS both, the phone app can discover and connect to the device without requiring user to go out of the phone app
3. BLE transport however consumes ~110KB memory at runtime. If the product does not use the BLE or BT functionality after provisioning is done, almost all the memory can be reclaimed back and can be added into the heap.
4. SoftAP based transport is highly interoperable; however as the same radio is shared between SoftAP and Station interface, the transport is not reliable in the phase when the Wi-Fi connection to external AP is attempted. Also, the client may roam back to different network when the SoftAP changes the channel at the time of Station connection.
5. SoftAP transport does not require much additional memory for the Wi-Fi use-cases
6. SoftAP based provisioning requires the phone app user to go to "System Settings" to connect to Wi-Fi network hosted by the device in case of iOS. The discovery (scanning) as well as connection API is not available for the iOS applications.

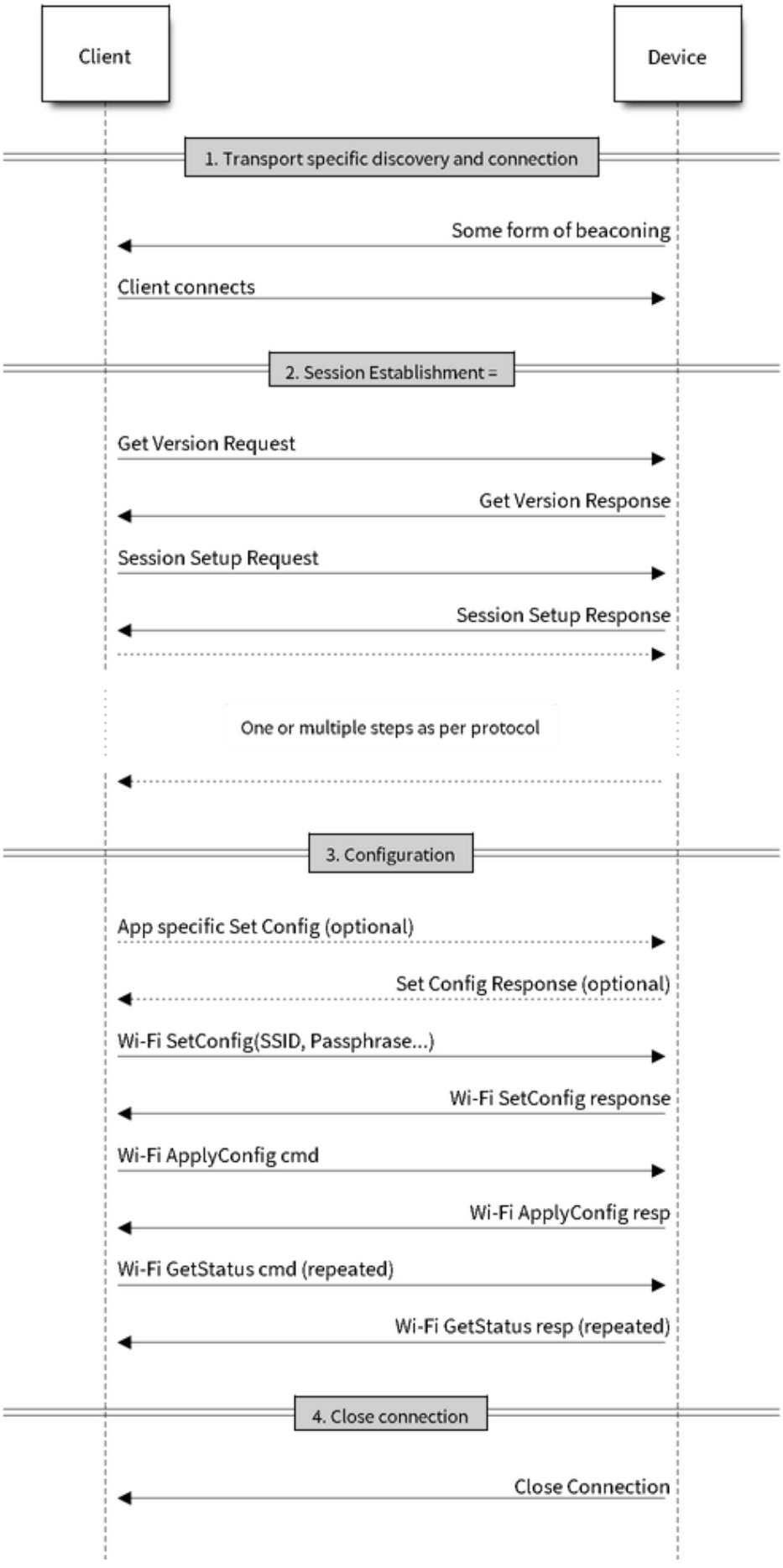

图 24: Typical Provisioning Process

Deciding on Security

Depending on the transport and other constraints the security scheme needs to be selected by the application developers. Following considerations need to be given from the provisioning security perspective: 1. The configuration data sent from the client to the device and the response has to be secured. 2. The client should authenticate the device it is connected to. 3. The device manufacturer may choose proof-of-possession - a unique per device secret to be entered on the provisioning client as a security measure to make sure that the user can provisions the device in the possession.

There are two levels of security schemes. The developer may select one or combination depending on requirements.

1. *Transport Security:* SoftAP provisioning may choose WPA2 protected security with unique per-device passphrase. Per-device unique passphrase can also act as a proof-of-possession. For BLE, "just-works" security can be used as a transport level security after understanding the level of security it provides.
2. *Application Security:* The unified provisioning subsystem provides application level security (*security1*) that provides data protection and authentication (through proof-of-possession) if the application does not use the transport level security or if the transport level security is not sufficient for the use-case.

Device Discovery

The advertisement and device discovery is left to the application and depending on the protocol chosen, the phone apps and device firmware application can choose appropriate method to advertise and discovery.

For the SoftAP+HTTP transport, typically the SSID (network name) of the AP hosted by the device can be used for discovery.

For the BLE transport device name or primary service included in the advertisement or combination of both can be used for discovery.

Architecture

The below diagram shows architecture of unified provisioning.

It relies on the base layer called *Protocol Communication* (Protocol Communication) which provides a framework for security schemes and transport mechanisms. Wi-Fi Provisioning layer uses Protocomm to provide simple callbacks to the application for setting the configuration and getting the Wi-Fi status. The application has control over implementation of these callbacks. In addition application can directly use protocomm to register custom handlers.

Application creates a protocomm instance which is mapped to a specific transport and specific security scheme. Each transport in the protocomm has a concept of an "end-point" which corresponds to logical channel for communication for specific type of information. For example security handshake happens on a different endpoint than the Wi-Fi configuration endpoint. Each end-point is identified using a string and depending on the transport internal representation of the end-point changes. In case of SoftAP+HTTP transport the end-point corresponds to URI whereas in case of BLE the end-point corresponds to GATT characteristic with specific UUID. Developers can create custom end-points and implement handler for the data that is received or sent over the same end-point.

Security Schemes

At present unified provisioning supports two security schemes: 1. Security0 - No security (No encryption) 2. Security1 - Curve25519 based key exchange, shared key derivation and AES256-CTR mode encryption of the data. It supports two modes :

a. Authorized - Proof of Possession (PoP) string used to authorize session and derive shared key
b. No Auth (Null PoP) - Shared key derived through key exchange only

Security1 scheme details are shown in the below sequence diagram

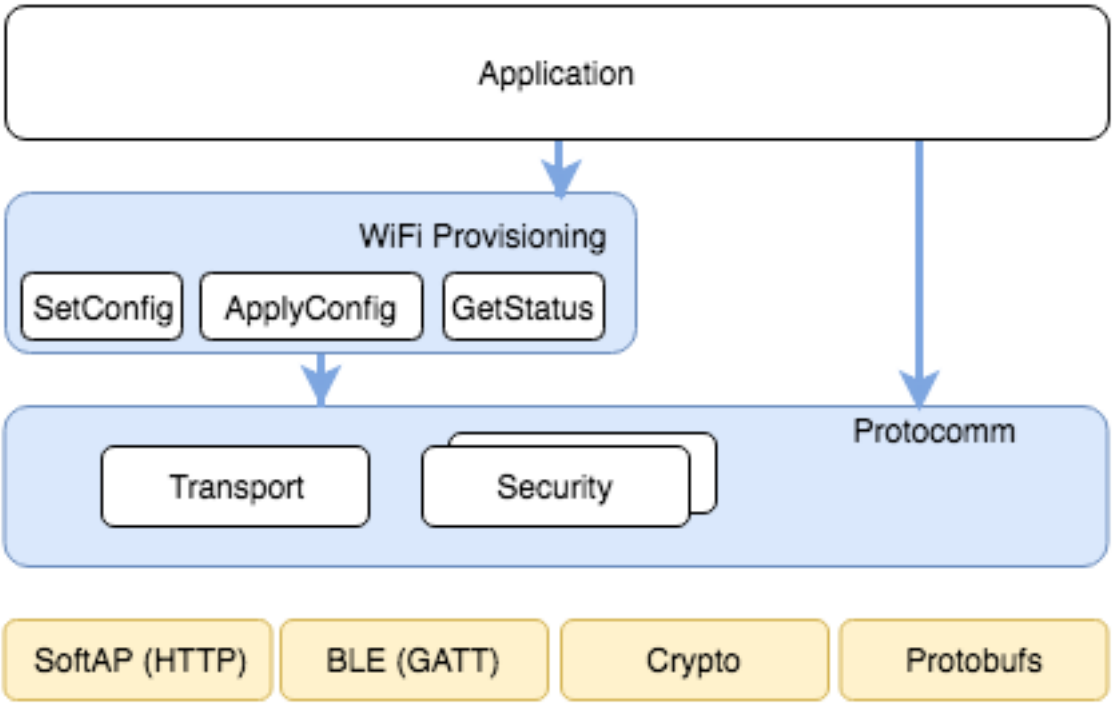

图 25: Unified Provisioning Architecture

Sample Code

Please refer to *Protocol Communication* and *Wi-Fi Provisioning* for API guides and code snippets on example usage.

Application implementation can be found as an example under provisioning.

Provisioning Tools

Provisioning applications are available for various platforms, along with source code:

- **Android:**
  - BLE Provisioning app on Play Store.
  - SoftAP Provisioning app on Play Store.
  - Source code on GitHub: esp-idf-provisioning-android.
- **iOS:**
  - BLE Provisioning app on app store.
  - SoftAP Provisioning app on app Store.
  - Source code on GitHub: esp-idf-provisioning-ios.
- Linux/MacOS/Windows : tools/esp_prov (a python based command line tool for provisioning)

The phone applications offer simple UI and thus more user centric, while the command line application is useful as a debugging tool for developers.

2.5.2 Protocol Communication

Overview

Protocol Communication (protocomm) component manages secure sessions and provides framework for multiple transports. The application can also use protocomm layer directly to have application specific extensions for the provisioning (or non-provisioning) use cases.

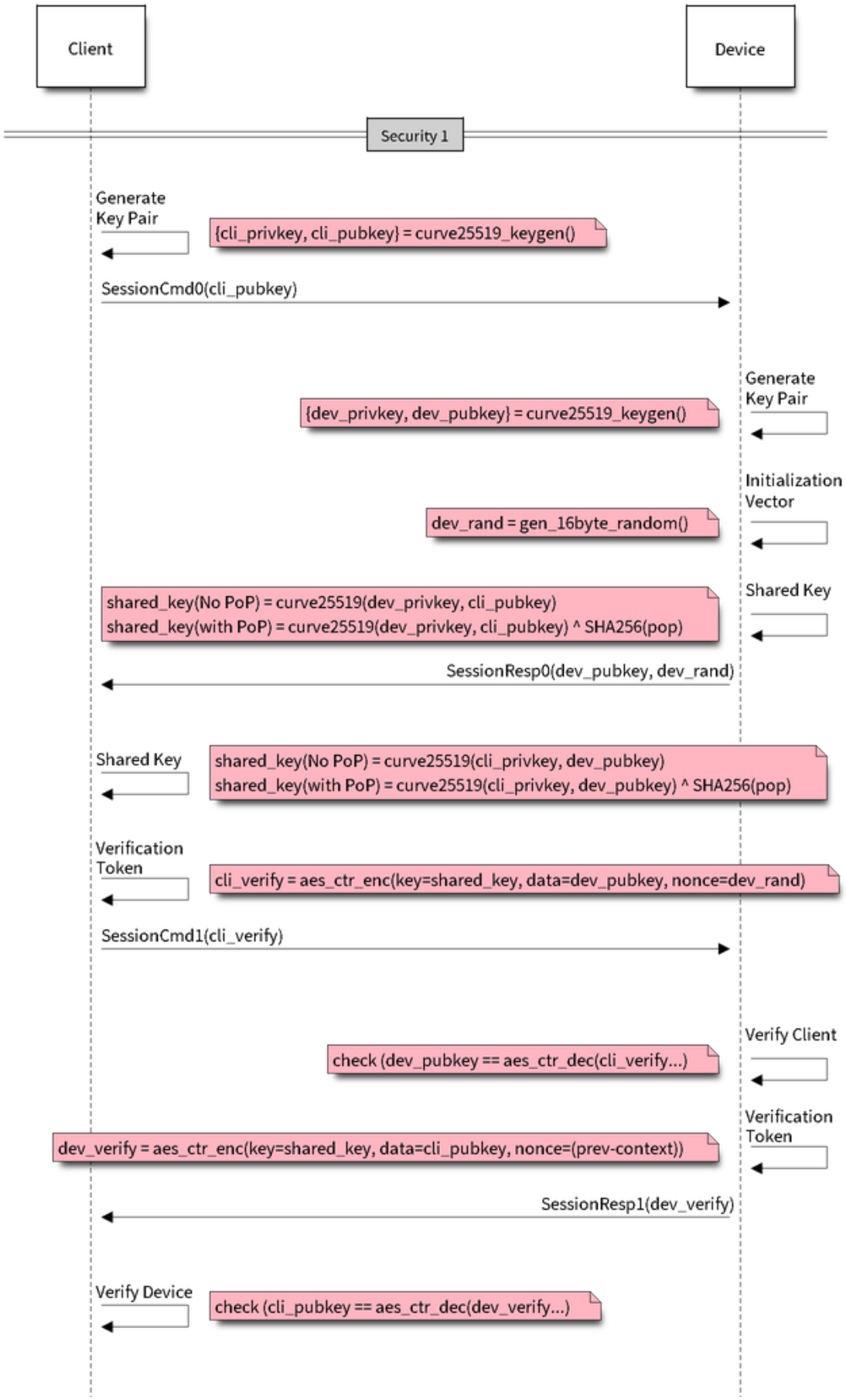

图 26: Security1

Following features are available for provisioning :

- **Communication security at application level -**
  - protocomm_security0 (no security)
  - protocomm_security1 (curve25519 key exchange + AES-CTR encryption)
- Proof-of-possession (support with protocomm_security1 only)

Protocomm internally uses protobuf (protocol buffers) for secure session establishment. Though users can implement their own security (even without using protobuf). One can even use protocomm without any security layer.

Protocomm provides framework for various transports - WiFi (SoftAP+HTTPD), BLE, console - in which case the handler invocation is automatically taken care of on the device side (see Transport Examples below for code snippets).

Note that the client still needs to establish session (only for protocomm_security1) by performing the two way handshake. See *Unified Provisioning* for more details about the secure handshake logic.

Transport Example (SoftAP + HTTP) with Security 1

For complete example see provisioning/legacy/softap_prov

```
/* Endpoint handler to be registered with protocomm.
 * This simply echoes back the received data. */
esp_err_t echo_req_handler (uint32_t session_id,
                            const uint8_t *inbuf, ssize_t inlen,
                            uint8_t **outbuf, ssize_t *outlen,
                            void *priv_data)
{
    /* Session ID may be used for persistence */
    printf("Session ID : %d", session_id);

    /* Echo back the received data */
    *outlen = inlen;            /* Output data length updated */
    *outbuf = malloc(inlen);    /* This will be deallocated outside */
    memcpy(*outbuf, inbuf, inlen);

    /* Private data that was passed at the time of endpoint creation */
    uint32_t *priv = (uint32_t *) priv_data;
    if (priv) {
        printf("Private data : %d", *priv);
    }

    return ESP_OK;
}

/* Example function for launching a protocomm instance over HTTP */
protocomm_t *start_pc(const char *pop_string)
{
    protocomm_t *pc = protocomm_new();


    /* Config for protocomm_httpd_start() */
    protocomm_httpd_config_t pc_config = {
        .data = {
        .config = PROTOCOMM_HTTPD_DEFAULT_CONFIG()
        }
    };

    /* Start protocomm server on top of HTTP */
    protocomm_httpd_start(pc, &pc_config);

    /* Create Proof of Possession object from pop_string. It must be valid
     * throughout the scope of protocomm endpoint. This need not be␣
↪static,
```

(下页继续)

(续上页)

```
     * ie. could be dynamically allocated and freed at the time of␣
↪endpoint
     * removal */
    const static protocomm_security_pop_t pop_obj = {
        .data = (const uint8_t *) strdup(pop_string),
        .len = strlen(pop_string)
    };

    /* Set security for communication at application level. Just like for
     * request handlers, setting security creates an endpoint and␣
↪registers
     * the handler provided by protocomm_security1. One can similarly use
     * protocomm_security0. Only one type of security can be set for a
     * protocomm instance at a time. */
    protocomm_set_security(pc, "security_endpoint", &protocomm_security1,␣
↪&pop_obj);

    /* Private data passed to the endpoint must be valid throughout the␣
↪scope
     * of protocomm endpoint. This need not be static, ie. could be␣
↪dynamically
     * allocated and freed at the time of endpoint removal */
    static uint32_t priv_data = 1234;

    /* Add a new endpoint for the protocomm instance, identified by a␣
↪unique name
     * and register a handler function along with private data to be␣
↪passed at the
     * time of handler execution. Multiple endpoints can be added as long␣
↪as they
     * are identified by unique names */
    protocomm_add_endpoint(pc, "echo_req_endpoint",
                           echo_req_handler, (void *) &priv_data);
    return pc;
}

/* Example function for stopping a protocomm instance */
void stop_pc(protocomm_t *pc)
{
    /* Remove endpoint identified by it's unique name */
    protocomm_remove_endpoint(pc, "echo_req_endpoint");

    /* Remove security endpoint identified by it's name */
    protocomm_unset_security(pc, "security_endpoint");

    /* Stop HTTP server */
    protocomm_httpd_stop(pc);

    /* Delete (deallocate) the protocomm instance */
    protocomm_delete(pc);
}
```

Transport Example (BLE) with Security 0

For complete example see provisioning/legacy/ble_prov

```
/* Example function for launching a secure protocomm instance over BLE */
protocomm_t *start_pc()
{
    protocomm_t *pc = protocomm_new();
```

(下页继续)

(续上页)

```
    /* Endpoint UUIDs */
    protocomm_ble_name_uuid_t nu_lookup_table[] = {
        {"security_endpoint", 0xFF51},
        {"echo_req_endpoint", 0xFF52}
    };

    /* Config for protocomm_ble_start() */
    protocomm_ble_config_t config = {
        .service_uuid = {
            /* LSB <---------------------------------------
            * ---------------------------------------> MSB */
            0xfb, 0x34, 0x9b, 0x5f, 0x80, 0x00, 0x00, 0x80,
            0x00, 0x10, 0x00, 0x00, 0xFF, 0xFF, 0x00, 0x00,
        },
        .nu_lookup_count = sizeof(nu_lookup_table)/sizeof(nu_lookup_
↪table[0]),
        .nu_lookup = nu_lookup_table
    };

    /* Start protocomm layer on top of BLE */
    protocomm_ble_start(pc, &config);

    /* For protocomm_security0, Proof of Possession is not used, and can␣
↪be kept NULL */
    protocomm_set_security(pc, "security_endpoint", &protocomm_security0,␣
↪NULL);
    protocomm_add_endpoint(pc, "echo_req_endpoint", echo_req_handler,␣
↪NULL);
    return pc;
}

/* Example function for stopping a protocomm instance */
void stop_pc(protocomm_t *pc)
{
    protocomm_remove_endpoint(pc, "echo_req_endpoint");
    protocomm_unset_security(pc, "security_endpoint");

    /* Stop BLE protocomm service */
    protocomm_ble_stop(pc);

    protocomm_delete(pc);
}
```

API Reference

Header File

- protocomm/include/common/protocomm.h

Functions

protocomm_t ***protocomm_new**(void)

Create a new protocomm instance.

This API will return a new dynamically allocated protocomm instance with all elements of the protocomm_t structure initialized to NULL.

Return

- protocomm_t* : On success
- NULL : No memory for allocating new instance

void **protocomm_delete**(*protocomm_t* *pc)

Delete a protocomm instance.

This API will deallocate a protocomm instance that was created using `protocomm_new()`.

Parameters

- `[in] pc`: Pointer to the protocomm instance to be deleted

esp_err_t **protocomm_add_endpoint**(*protocomm_t* *pc, **const** char *ep_name, *protocomm_req_handler_t* h, void *priv_data)

Add endpoint request handler for a protocomm instance.

This API will bind an endpoint handler function to the specified endpoint name, along with any private data that needs to be pass to the handler at the time of call.

Note

- An endpoint must be bound to a valid protocomm instance, created using `protocomm_new()`.
- This function internally calls the registered `add_endpoint()` function of the selected transport which is a member of the protocomm_t instance structure.

Return

- ESP_OK : Success
- ESP_FAIL : Error adding endpoint / Endpoint with this name already exists
- ESP_ERR_NO_MEM : Error allocating endpoint resource
- ESP_ERR_INVALID_ARG : Null instance/name/handler arguments

Parameters

- `[in] pc`: Pointer to the protocomm instance
- `[in] ep_name`: Endpoint identifier(name) string
- `[in] h`: Endpoint handler function
- `[in] priv_data`: Pointer to private data to be passed as a parameter to the handler function on call. Pass NULL if not needed.

esp_err_t **protocomm_remove_endpoint**(*protocomm_t* *pc, **const** char *ep_name)

Remove endpoint request handler for a protocomm instance.

This API will remove a registered endpoint handler identified by an endpoint name.

Note

- This function internally calls the registered `remove_endpoint()` function which is a member of the protocomm_t instance structure.

Return

- ESP_OK : Success
- ESP_ERR_NOT_FOUND : Endpoint with specified name doesn’ t exist
- ESP_ERR_INVALID_ARG : Null instance/name arguments

Parameters

- `[in] pc`: Pointer to the protocomm instance
- `[in] ep_name`: Endpoint identifier(name) string

esp_err_t **protocomm_open_session**(*protocomm_t* *pc, uint32_t *session_id*)

Allocates internal resources for new transport session.

Note

- An endpoint must be bound to a valid protocomm instance, created using `protocomm_new()`.

Return

- ESP_OK : Request handled successfully
- ESP_ERR_NO_MEM : Error allocating internal resource
- ESP_ERR_INVALID_ARG : Null instance/name arguments

Parameters

- `[in] pc`: Pointer to the protocomm instance
- `[in] session_id`: Unique ID for a communication session

esp_err_t **protocomm_close_session**(*protocomm_t* *pc, uint32_t *session_id*)

Frees internal resources used by a transport session.

Note

- An endpoint must be bound to a valid protocomm instance, created using `protocomm_new()`.

Return

- ESP_OK : Request handled successfully
- ESP_ERR_INVALID_ARG : Null instance/name arguments

Parameters

- `[in] pc`: Pointer to the protocomm instance
- `[in] session_id`: Unique ID for a communication session

esp_err_t **protocomm_req_handle**(*protocomm_t* *pc, **const** char *ep_name, uint32_t session_id, **const** uint8_t *inbuf, ssize_t inlen, uint8_t **outbuf, ssize_t *outlen)

Calls the registered handler of an endpoint session for processing incoming data and generating the response.

Note

- An endpoint must be bound to a valid protocomm instance, created using `protocomm_new()`.
- Resulting output buffer must be deallocated by the caller.

Return

- ESP_OK : Request handled successfully
- ESP_FAIL : Internal error in execution of registered handler
- ESP_ERR_NO_MEM : Error allocating internal resource
- ESP_ERR_NOT_FOUND : Endpoint with specified name doesn't exist
- ESP_ERR_INVALID_ARG : Null instance/name arguments

Parameters

- `[in] pc`: Pointer to the protocomm instance
- `[in] ep_name`: Endpoint identifier(name) string
- `[in] session_id`: Unique ID for a communication session
- `[in] inbuf`: Input buffer contains input request data which is to be processed by the registered handler
- `[in] inlen`: Length of the input buffer
- `[out] outbuf`: Pointer to internally allocated output buffer, where the resulting response data output from the registered handler is to be stored
- `[out] outlen`: Buffer length of the allocated output buffer

esp_err_t **protocomm_set_security**(*protocomm_t* *pc, **const** char *ep_name, **const** *protocomm_security_t* *sec, **const** *protocomm_security_pop_t* *pop)

Add endpoint security for a protocomm instance.

This API will bind a security session establisher to the specified endpoint name, along with any proof of possession that may be required for authenticating a session client.

Note

- An endpoint must be bound to a valid protocomm instance, created using `protocomm_new()`.
- The choice of security can be any `protocomm_security_t` instance. Choices `protocomm_security0` and `protocomm_security1` are readily available.

Return

- ESP_OK : Success
- ESP_FAIL : Error adding endpoint / Endpoint with this name already exists
- ESP_ERR_INVALID_STATE : Security endpoint already set
- ESP_ERR_NO_MEM : Error allocating endpoint resource
- ESP_ERR_INVALID_ARG : Null instance/name/handler arguments

Parameters

- `[in] pc`: Pointer to the protocomm instance
- `[in] ep_name`: Endpoint identifier(name) string
- `[in] sec`: Pointer to endpoint security instance
- `[in] pop`: Pointer to proof of possession for authenticating a client

esp_err_t **protocomm_unset_security**(*protocomm_t* *pc, **const** char *ep_name)

Remove endpoint security for a protocomm instance.

This API will remove a registered security endpoint identified by an endpoint name.

Return

- ESP_OK : Success
- ESP_ERR_NOT_FOUND : Endpoint with specified name doesn't exist
- ESP_ERR_INVALID_ARG : Null instance/name arguments

Parameters

- `[in] pc`: Pointer to the protocomm instance
- `[in] ep_name`: Endpoint identifier(name) string

esp_err_t **protocomm_set_version** (*protocomm_t* *pc, **const** char *ep_name, **const** char *version)

Set endpoint for version verification.

This API can be used for setting an application specific protocol version which can be verified by clients through the endpoint.

Note

- An endpoint must be bound to a valid protocomm instance, created using `protocomm_new()`.

Return

- ESP_OK : Success
- ESP_FAIL : Error adding endpoint / Endpoint with this name already exists
- ESP_ERR_INVALID_STATE : Version endpoint already set
- ESP_ERR_NO_MEM : Error allocating endpoint resource
- ESP_ERR_INVALID_ARG : Null instance/name/handler arguments

Parameters

- `[in] pc`: Pointer to the protocomm instance
- `[in] ep_name`: Endpoint identifier(name) string
- `[in] version`: Version identifier(name) string

esp_err_t **protocomm_unset_version** (*protocomm_t* *pc, **const** char *ep_name)

Remove version verification endpoint from a protocomm instance.

This API will remove a registered version endpoint identified by an endpoint name.

Return

- ESP_OK : Success
- ESP_ERR_NOT_FOUND : Endpoint with specified name doesn't exist
- ESP_ERR_INVALID_ARG : Null instance/name arguments

Parameters

- `[in] pc`: Pointer to the protocomm instance
- `[in] ep_name`: Endpoint identifier(name) string

Type Definitions

typedef *esp_err_t* (***protocomm_req_handler_t**) (uint32_t session_id, **const** uint8_t *inbuf, ssize_t inlen, uint8_t **outbuf, ssize_t *outlen, void *priv_data)

Function prototype for protocomm endpoint handler.

typedef struct protocomm **protocomm_t**

This structure corresponds to a unique instance of protocomm returned when the API `protocomm_new()` is called. The remaining Protocomm APIs require this object as the first parameter.

Note Structure of the protocomm object is kept private

Header File

- protocomm/include/security/protocomm_security.h

Structures

struct protocomm_security_pop

Proof Of Possession for authenticating a secure session.

Public Members

const uint8_t ***data**
Pointer to buffer containing the proof of possession data

uint16_t **len**
Length (in bytes) of the proof of possession data

struct protocomm_security
Protocomm security object structure.

The member functions are used for implementing secure protocomm sessions.

Note This structure should not have any dynamic members to allow re-entrancy

Public Members

int **ver**
Unique version number of security implementation

esp_err_t (***init**) (*protocomm_security_handle_t* *handle)
Function for initializing/allocating security infrastructure

esp_err_t (***cleanup**) (*protocomm_security_handle_t* handle)
Function for deallocating security infrastructure

esp_err_t (***new_transport_session**) (*protocomm_security_handle_t* handle, uint32_t session_id)
Starts new secure transport session with specified ID

esp_err_t (***close_transport_session**) (*protocomm_security_handle_t* handle, uint32_t session_id)
Closes a secure transport session with specified ID

esp_err_t (***security_req_handler**) (*protocomm_security_handle_t* handle, **const** *protocomm_security_pop_t* *pop, uint32_t session_id, **const** uint8_t *inbuf, ssize_t inlen, uint8_t **outbuf, ssize_t *outlen, void *priv_data)
Handler function for authenticating connection request and establishing secure session

esp_err_t (***encrypt**) (*protocomm_security_handle_t* handle, uint32_t session_id, **const** uint8_t *inbuf, ssize_t inlen, uint8_t *outbuf, ssize_t *outlen)
Function which implements the encryption algorithm

esp_err_t (***decrypt**) (*protocomm_security_handle_t* handle, uint32_t session_id, **const** uint8_t *inbuf, ssize_t inlen, uint8_t *outbuf, ssize_t *outlen)
Function which implements the decryption algorithm

Type Definitions

typedef struct *protocomm_security_pop* **protocomm_security_pop_t**
Proof Of Possession for authenticating a secure session.

typedef void ***protocomm_security_handle_t**

typedef struct *protocomm_security* **protocomm_security_t**
Protocomm security object structure.

The member functions are used for implementing secure protocomm sessions.

Note This structure should not have any dynamic members to allow re-entrancy

Header File

- protocomm/include/security/protocomm_security0.h

Header File

- protocomm/include/security/protocomm_security1.h

Header File

- protocomm/include/transports/protocomm_httpd.h

Functions

esp_err_t **protocomm_httpd_start** (*protocomm_t *pc*, **const** *protocomm_httpd_config_t *config*)

Start HTTPD protocomm transport.

This API internally creates a framework to allow endpoint registration and security configuration for the protocomm.

Note This is a singleton. ie. Protocomm can have multiple instances, but only one instance can be bound to an HTTP transport layer.

Return

- ESP_OK : Success
- ESP_ERR_INVALID_ARG : Null arguments
- ESP_ERR_NOT_SUPPORTED : Transport layer bound to another protocomm instance
- ESP_ERR_INVALID_STATE : Transport layer already bound to this protocomm instance
- ESP_ERR_NO_MEM : Memory allocation for server resource failed
- ESP_ERR_HTTPD_* : HTTP server error on start

Parameters

- `[in] pc`: Protocomm instance pointer obtained from protocomm_new()
- `[in] config`: Pointer to config structure for initializing HTTP server

esp_err_t **protocomm_httpd_stop** (*protocomm_t *pc*)

Stop HTTPD protocomm transport.

This API cleans up the HTTPD transport protocomm and frees all the handlers registered with the protocomm.

Return

- ESP_OK : Success
- ESP_ERR_INVALID_ARG : Null / incorrect protocomm instance pointer

Parameters

- `[in] pc`: Same protocomm instance that was passed to protocomm_httpd_start()

Unions

union protocomm_httpd_config_data_t

#include <protocomm_httpd.h> Protocomm HTTPD Configuration Data

Public Members

void ***handle**

HTTP Server Handle, if ext_handle_provided is set to true

protocomm_http_server_config_t **config**

HTTP Server Configuration, if a server is not already active

Structures

struct protocomm_http_server_config_t

Config parameters for protocomm HTTP server.

Public Members

uint16_t **port**
Port on which the HTTP server will listen

size_t **stack_size**
Stack size of server task, adjusted depending upon stack usage of endpoint handler

unsigned **task_priority**
Priority of server task

struct protocomm_httpd_config_t
Config parameters for protocomm HTTP server.

Public Members

bool **ext_handle_provided**
Flag to indicate of an external HTTP Server Handle has been provided. In such as case, protocomm will use the same HTTP Server and not start a new one internally.

protocomm_httpd_config_data_t **data**
Protocomm HTTPD Configuration Data

Macros

PROTOCOMM_HTTPD_DEFAULT_CONFIG()

Header File

- protocomm/include/transports/protocomm_ble.h

Functions

esp_err_t **protocomm_ble_start**(*protocomm_t* *pc, **const** *protocomm_ble_config_t* *config)
Start Bluetooth Low Energy based transport layer for provisioning.

Initialize and start required BLE service for provisioning. This includes the initialization for characteristics/service for BLE.

Return
- ESP_OK : Success
- ESP_FAIL : Simple BLE start error
- ESP_ERR_NO_MEM : Error allocating memory for internal resources
- ESP_ERR_INVALID_STATE : Error in ble config
- ESP_ERR_INVALID_ARG : Null arguments

Parameters
- `[in] pc`: Protocomm instance pointer obtained from protocomm_new()
- `[in] config`: Pointer to config structure for initializing BLE

esp_err_t **protocomm_ble_stop**(*protocomm_t* *pc)
Stop Bluetooth Low Energy based transport layer for provisioning.

Stops service/task responsible for BLE based interactions for provisioning

Note You might want to optionally reclaim memory from Bluetooth. Refer to the documentation of `esp_bt_mem_release` in that case.

Return
- ESP_OK : Success
- ESP_FAIL : Simple BLE stop error
- ESP_ERR_INVALID_ARG : Null / incorrect protocomm instance

Parameters
- `[in] pc`: Same protocomm instance that was passed to protocomm_ble_start()

Structures

struct name_uuid

This structure maps handler required by protocomm layer to UUIDs which are used to uniquely identify BLE characteristics from a smartphone or a similar client device.

Public Members

const char ***name**

Name of the handler, which is passed to protocomm layer

uint16_t **uuid**

UUID to be assigned to the BLE characteristic which is mapped to the handler

struct protocomm_ble_config

Config parameters for protocomm BLE service.

Public Members

char **device_name**[**MAX_BLE_DEVNAME_LEN**]

BLE device name being broadcast at the time of provisioning

uint8_t **service_uuid**[**BLE_UUID128_VAL_LENGTH**]

128 bit UUID of the provisioning service

uint8_t ***manufacturer_data**

BLE device manufacturer data pointer in advertisement

ssize_t **manufacturer_data_len**

BLE device manufacturer data length in advertisement

ssize_t **nu_lookup_count**

Number of entries in the Name-UUID lookup table

protocomm_ble_name_uuid_t ***nu_lookup**

Pointer to the Name-UUID lookup table

unsigned **ble_bonding** : 1

BLE bonding

unsigned **ble_sm_sc** : 1

BLE security flag

Macros

MAX_BLE_DEVNAME_LEN

BLE device name cannot be larger than this value 31 bytes (max scan response size) - 1 byte (length) - 1 byte (type) = 29 bytes

BLE_UUID128_VAL_LENGTH

MAX_BLE_MANUFACTURER_DATA_LEN

Theoretically, the limit for max manufacturer length remains same as BLE device name i.e. 31 bytes (max scan response size) - 1 byte (length) - 1 byte (type) = 29 bytes However, manufacturer data goes along with BLE device name in scan response. So, it is important to understand the actual length should be smaller than (29 - (BLE device name length) - 2).

Type Definitions

typedef struct *name_uuid* **protocomm_ble_name_uuid_t**

This structure maps handler required by protocomm layer to UUIDs which are used to uniquely identify BLE characteristics from a smartphone or a similar client device.

typedef struct *protocomm_ble_config* **protocomm_ble_config_t**

Config parameters for protocomm BLE service.

2.5.3 Wi-Fi Provisioning

Overview

This component provides APIs that control Wi-Fi provisioning service for receiving and configuring Wi-Fi credentials over SoftAP or BLE transport via secure *Protocol Communication (protocomm)* sessions. The set of `wifi_prov_mgr_` APIs help in quickly implementing a provisioning service having necessary features with minimal amount of code and sufficient flexibility.

Initialization *`wifi_prov_mgr_init()`* is called to configure and initialize the provisioning manager and thus this must be called prior to invoking any other `wifi_prov_mgr_` APIs. Note that the manager relies on other components of IDF, namely NVS, TCP/IP, Event Loop and Wi-Fi (and optionally mDNS), hence these must be initialized beforehand. The manager can be de-initialized at any moment by making a call to *`wifi_prov_mgr_deinit()`*.

```
wifi_prov_mgr_config_t config = {
    .scheme = wifi_prov_scheme_ble,
    .scheme_event_handler = WIFI_PROV_SCHEME_BLE_EVENT_HANDLER_FREE_BTDM
};

ESP_ERR_CHECK( wifi_prov_mgr_init(config) );
```

The configuration structure `wifi_prov_mgr_config_t` has a few fields to specify the behavior desired of the manager :

- *scheme* : This is used to specify the provisioning scheme. Each scheme corresponds to one of the modes of transport supported by protocomm. Hence, we have three options :
  - `wifi_prov_scheme_ble` : BLE transport and GATT Server for handling provisioning commands
  - `wifi_prov_scheme_softap` : Wi-Fi SoftAP transport and HTTP Server for handling provisioning commands
  - `wifi_prov_scheme_console` : Serial transport and console for handling provisioning commands
- *scheme_event_handler* : An event handler defined along with scheme. Choosing appropriate scheme specific event handler allows the manager to take care of certain matters automatically. Presently this is not used for either SoftAP or Console based provisioning, but is very convenient for BLE. To understand how, we must recall that Bluetooth requires quite some amount of memory to function and once provisioning is finished, the main application may want to reclaim back this memory (or part of it, if it needs to use either BLE or classic BT). Also, upon every future reboot of a provisioned device, this reclamation of memory needs to be performed again. To reduce this complication in using `wifi_prov_scheme_ble`, the scheme specific handlers have been defined, and depending upon the chosen handler, the BLE / classic BT / BTDM memory will be freed automatically when the provisioning manager is de-initialized. The available options are:
  - `WIFI_PROV_SCHEME_BLE_EVENT_HANDLER_FREE_BTDM` - Free both classic BT and BLE (BTDM) memory. Used when main application doesn't require Bluetooth at all.
  - `WIFI_PROV_SCHEME_BLE_EVENT_HANDLER_FREE_BLE` - Free only BLE memory. Used when main application requires classic BT.
  - `WIFI_PROV_SCHEME_BLE_EVENT_HANDLER_FREE_BT` - Free only classic BT. Used when main application requires BLE. In this case freeing happens right when the manager is initialized.
  - `WIFI_PROV_EVENT_HANDLER_NONE` - Don't use any scheme specific handler. Used when provisioning scheme is not BLE (i.e. SoftAP or Console), or when main application wants to handle the memory reclaiming on its own, or needs both BLE and classic BT to function.
- *app_event_handler* (Deprecated) : It is now recommended to catch `WIFI_PROV_EVENT``s that are emitted to the default event loop handler. See definition of ``wifi_prov_cb_event_t` for the list of events that are generated by the provisioning service. Here is an excerpt showing some of the provisioning events:

```
static void event_handler(void* arg, esp_event_base_t event_base,
                          int event_id, void* event_data)
{
    if (event_base == WIFI_PROV_EVENT) {
        switch (event_id) {
            case WIFI_PROV_START:
                ESP_LOGI(TAG, "Provisioning started");
                break;
            case WIFI_PROV_CRED_RECV: {
                wifi_sta_config_t *wifi_sta_cfg = (wifi_sta_config_t␣
↪*)event_data;
                ESP_LOGI(TAG, "Received Wi-Fi credentials"
                         "\n\tSSID     : %s\n\tPassword : %s",
                         (const char *) wifi_sta_cfg->ssid,
                         (const char *) wifi_sta_cfg->password);
                break;
            }
            case WIFI_PROV_CRED_FAIL: {
                wifi_prov_sta_fail_reason_t *reason = (wifi_prov_sta_fail_
↪reason_t *)event_data;
                ESP_LOGE(TAG, "Provisioning failed!\n\tReason : %s"
                         "\n\tPlease reset to factory and retry␣
↪provisioning",
                         (*reason == WIFI_PROV_STA_AUTH_ERROR) ?
                         "Wi-Fi station authentication failed" : "Wi-Fi␣
↪access-point not found");
                break;
            }
            case WIFI_PROV_CRED_SUCCESS:
                ESP_LOGI(TAG, "Provisioning successful");
                break;
            case WIFI_PROV_END:
                /* De-initialize manager once provisioning is finished */
                wifi_prov_mgr_deinit();
                break;
            default:
                break;
        }
    }
}
```

The manager can be de-initialized at any moment by making a call to *wifi_prov_mgr_deinit()*.

Check Provisioning State Whether device is provisioned or not can be checked at runtime by calling *wifi_prov_mgr_is_provisioned()*. This internally checks if the Wi-Fi credentials are stored in NVS.

Note that presently manager does not have its own NVS namespace for storage of Wi-Fi credentials, instead it relies on the esp_wifi_ APIs to set and get the credentials stored in NVS from the default location.

If provisioning state needs to be reset, any of the following approaches may be taken :

- the associated part of NVS partition has to be erased manually
- main application must implement some logic to call esp_wifi_ APIs for erasing the credentials at runtime
- main application must implement some logic to force start the provisioning irrespective of the provisioning state

```
bool provisioned = false;
ESP_ERR_CHECK( wifi_prov_mgr_is_provisioned(&provisioned) );
```

Start Provisioning Service At the time of starting provisioning we need to specify a service name and the corresponding key. These translate to :

- Wi-Fi SoftAP SSID and passphrase, respectively, when scheme is `wifi_prov_scheme_softap`
- BLE Device name (service key is ignored) when scheme is `wifi_prov_scheme_ble`

Also, since internally the manager uses *protocomm*, we have the option of choosing one of the security features provided by it :

- Security 1 is secure communication which consists of a prior handshake involving X25519 key exchange along with authentication using a proof of possession (*pop*), followed by AES-CTR for encryption/decryption of subsequent messages
- Security 0 is simply plain text communication. In this case the *pop* is simply ignored

See *Provisioning* for details about the security features.

```
const char *service_name = "my_device";
const char *service_key  = "password";

wifi_prov_security_t security = WIFI_PROV_SECURITY_1;
const char *pop = "abcd1234";

ESP_ERR_CHECK( wifi_prov_mgr_start_provisioning(security, pop, service_
↪name, service_key) );
```

The provisioning service will automatically finish only if it receives valid Wi-Fi AP credentials followed by successfully connection of device to the AP (IP obtained). Regardless of that, the provisioning service can be stopped at any moment by making a call to *`wifi_prov_mgr_stop_provisioning()`*.

注解: If the device fails to connect with the provided credentials, it won't accept new credentials anymore, but the provisioning service will keep on running (only to convey failure to the client), until the device is restarted. Upon restart the provisioning state will turn out to be true this time (as credentials will be found in NVS), but device will again fail to connect with those same credentials (unless an AP with the matching credentials somehow does become available). This situation can be fixed by resetting the credentials in NVS or force starting the provisioning service. This has been explained above in *Check Provisioning State*.

Waiting For Completion Typically, the main application will wait for the provisioning to finish, then de-initialize the manager to free up resources and finally start executing its own logic.

There are two ways for making this possible. The simpler way is to use a blocking call to *`wifi_prov_mgr_wait()`*.

```
// Start provisioning service
ESP_ERR_CHECK( wifi_prov_mgr_start_provisioning(security, pop, service_
↪name, service_key) );

// Wait for service to complete
wifi_prov_mgr_wait();

// Finally de-initialize the manager
wifi_prov_mgr_deinit();
```

The other way is to use the default event loop handler to catch `WIFI_PROV_EVENT``s and call :cpp:func:`wifi_prov_mgr_deinit()` when event ID is ``WIFI_PROV_END:

```
static void event_handler(void* arg, esp_event_base_t event_base,
                          int event_id, void* event_data)
{
    if (event_base == WIFI_PROV_EVENT && event_id == WIFI_PROV_END) {
        /* De-initialize manager once provisioning is finished */
```

(下页继续)

(续上页)

```
        wifi_prov_mgr_deinit();
    }
}
```

User Side Implementation When the service is started, the device to be provisioned is identified by the advertised service name which, depending upon the selected transport, is either the BLE device name or the SoftAP SSID.

When using SoftAP transport, for allowing service discovery, mDNS must be initialized before starting provisioning. In this case the hostname set by the main application is used, and the service type is internally set to *_esp_wifi_prov*.

When using BLE transport, a custom 128 bit UUID should be set using `wifi_prov_scheme_ble_set_service_uuid()`. This UUID will be included in the BLE advertisement and will correspond to the primary GATT service that provides provisioning endpoints as GATT characteristics. Each GATT characteristic will be formed using the primary service UUID as base, with different auto assigned 12th and 13th bytes (assume counting starts from 0th byte). Since, an endpoint characteristic UUID is auto assigned, it shouldn't be used to identify the endpoint. Instead, client side applications should identify the endpoints by reading the User Characteristic Description (0x2901) descriptor for each characteristic, which contains the endpoint name of the characteristic. For example, if the service UUID is set to *55cc035e-fb27-4f80-be02-3c60828b7451*, each endpoint characteristic will be assigned a UUID like *55cc____-fb27-4f80-be02-3c60828b7451*, with unique values at the 12th and 13th bytes.

Once connected to the device, the provisioning related protocomm endpoints can be identified as follows :

表 6: Endpoints provided by Provisioning Service

Endpoint Name (BLE + GATT Server)	URI (SoftAP + HTTP Server + mDNS)	Description
prov-session	http://<mdns-hostname>.local/prov-session	Security endpoint used for session establishment
prov-scan	http://wifi-prov.local/prov-scan	Endpoint used for starting Wi-Fi scan and receiving scan results
prov-config	http://<mdns-hostname>.local/prov-config	Endpoint used for configuring Wi-Fi credentials on device
proto-ver	http://<mdns-hostname>.local/proto-ver	Endpoint for retrieving version info

Immediately after connecting, the client application may fetch the version / capabilities information from the *proto-ver* endpoint. All communications to this endpoint are un-encrypted, hence necessary information (that may be relevant for deciding compatibility) can be retrieved before establishing a secure session. The response is in JSON format and looks like : `prov: { ver: v1.1, cap: [no_pop] }, my_app: { ver: 1.345, cap: [cloud, local_ctrl] },....` Here label *prov* provides provisioning service version (*ver*) and capabilities (*cap*). For now, only *no_pop* capability is supported, which indicates that the service doesn't require proof of possession for authentication. Any application related version / capabilities will be given by other labels (like *my_app* in this example). These additional fields are set using `wifi_prov_mgr_set_app_info()`.

User side applications need to implement the signature handshaking required for establishing and authenticating secure protocomm sessions as per the security scheme configured for use (this is not needed when manager is configured to use protocomm security 0).

See Unified Provisioning for more details about the secure handshake and encryption used. Applications must use the *.proto* files found under protocomm/proto, which define the Protobuf message structures supported by *prov-session* endpoint.

Once a session is established, Wi-Fi credentials are configured using the following set of *wifi_config* commands, serialized as Protobuf messages (the corresponding *.proto* files can be found under wifi_provisioning/proto) :

- *get_status* - For querying the Wi-Fi connection status. The device will respond with a status which will be one of connecting / connected / disconnected. If status is disconnected, a disconnection reason will also be included in the status response.
- *set_config* - For setting the Wi-Fi connection credentials
- *apply_config* - For applying the credentials saved during *set_config* and start the Wi-Fi station

After session establishment, client can also request Wi-Fi scan results from the device. The results returned is a list of AP SSIDs, sorted in descending order of signal strength. This allows client applications to display APs nearby to the device at the time of provisioning, and users can select one of the SSIDs and provide the password which is then sent using the *wifi_config* commands described above. The *wifi_scan* endpoint supports the following protobuf commands :

- *scan_start* - For starting Wi-Fi scan with various options :
  - *blocking* (input) - If true, the command returns only when the scanning is finished
  - *passive* (input) - If true scan is started in passive mode (this may be slower) instead of active mode
  - *group_channels* (input) - This specifies whether to scan all channels in one go (when zero) or perform scanning of channels in groups, with 120ms delay between scanning of consecutive groups, and the value of this parameter sets the number of channels in each group. This is useful when transport mode is SoftAP, where scanning all channels in one go may not give the Wi-Fi driver enough time to send out beacons, and hence may cause disconnection with any connected stations. When scanning in groups, the manager will wait for atleast 120ms after completing scan on a group of channels, and thus allow the driver to send out the beacons. For example, given that the total number of Wi-Fi channels is 14, then setting group_channels to 4, will create 5 groups, with each group having 3 channels, except the last one which will have 14 % 3 = 2 channels. So, when scan is started, the first 3 channels will be scanned, followed by a 120ms delay, and then the next 3 channels, and so on, until all the 14 channels have been scanned. One may need to adjust this parameter as having only few channels in a group may slow down the overall scan time, while having too many may again cause disconnection. Usually a value of 4 should work for most cases. Note that for any other mode of transport, e.g. BLE, this can be safely set to 0, and hence achieve the fastest overall scanning time.
  - *period_ms* (input) - Scan parameter specifying how long to wait on each channel
- *scan_status* - Gives the status of scanning process :
  - *scan_finished* (output) - When scan has finished this returns true
  - *result_count* (output) - This gives the total number of results obtained till now. If scan is yet happening this number will keep on updating
- *scan_result* - For fetching scan results. This can be called even if scan is still on going
  - *start_index* (input) - Starting index from where to fetch the entries from the results list
  - *count* (input) - Number of entries to fetch from the starting index
  - *entries* (output) - List of entries returned. Each entry consists of *ssid*, *channel* and *rssi* information

Additional Endpoints In case users want to have some additional protocomm endpoints customized to their requirements, this is done in two steps. First is creation of an endpoint with a specific name, and the second step is the registration of a handler for this endpoint. See *protocomm* for the function signature of an endpoint handler. A custom endpoint must be created after initialization and before starting the provisioning service. Whereas, the protocomm handler is registered for this endpoint only after starting the provisioning service.

```
wifi_prov_mgr_init(config);
wifi_prov_mgr_endpoint_create("custom-endpoint");
wifi_prov_mgr_start_provisioning(security, pop, service_name, service_
↪key);
wifi_prov_mgr_endpoint_register("custom-endpoint", custom_ep_handler,␣
↪custom_ep_data);
```

When the provisioning service stops, the endpoint is unregistered automatically.

One can also choose to call *wifi_prov_mgr_endpoint_unregister()* to manually deactivate an endpoint at runtime. This can also be used to deactivate the internal endpoints used by the provisioning service.

When / How To Stop Provisioning Service? The default behavior is that once the device successfully connects using the Wi-Fi credentials set by the *apply_config* command, the provisioning service will be stopped (and BLE

/ SoftAP turned off) automatically after responding to the next *get_status* command. If *get_status* command is not received by the device, the service will be stopped after a 30s timeout.

On the other hand, if device was not able to connect using the provided Wi-Fi credentials, due to incorrect SSID / passphrase, the service will keep running, and *get_status* will keep responding with disconnected status and reason for disconnection. Any further attempts to provide another set of Wi-Fi credentials, will be rejected. These credentials will be preserved, unless the provisioning service is force started, or NVS erased.

If this default behavior is not desired, it can be disabled by calling `wifi_prov_mgr_disable_auto_stop()`. Now the provisioning service will only be stopped after an explicit call to `wifi_prov_mgr_stop_provisioning()`, which returns immediately after scheduling a task for stopping the service. The service stops after a certain delay and WIFI_PROV_END event gets emitted. This delay is specified by the argument to `wifi_prov_mgr_disable_auto_stop()`.

The customized behavior is useful for applications which want the provisioning service to be stopped some time after the Wi-Fi connection is successfully established. For example, if the application requires the device to connect to some cloud service and obtain another set of credentials, and exchange this credentials over a custom protocomm endpoint, then after successfully doing so stop the provisioning service by calling `wifi_prov_mgr_stop_provisioning()` inside the protocomm handler itself. The right amount of delay ensures that the transport resources are freed only after the response from the protocomm handler reaches the client side application.

Application Examples

For complete example implementation see provisioning/wifi_prov_mgr

Provisioning Tools

Provisioning applications are available for various platforms, along with source code:

- **Android:**
  - BLE Provisioning app on Play Store.
  - SoftAP Provisioning app on Play Store.
  - Source code on GitHub: esp-idf-provisioning-android.
- **iOS:**
  - BLE Provisioning app on app store.
  - SoftAP Provisioning app on app Store.
  - Source code on GitHub: esp-idf-provisioning-ios.
- Linux/MacOS/Windows : tools/esp_prov (a python based command line tool for provisioning)

The phone applications offer simple UI and thus more user centric, while the command line application is useful as a debugging tool for developers.

API Reference

Header File

- wifi_provisioning/include/wifi_provisioning/manager.h

Functions

esp_err_t **wifi_prov_mgr_init** (*wifi_prov_mgr_config_t config*)

Initialize provisioning manager instance.

Configures the manager and allocates internal resources

Configuration specifies the provisioning scheme (transport) and event handlers

Event WIFI_PROV_INIT is emitted right after initialization is complete

Return

- ESP_OK : Success
- ESP_FAIL : Fail

Parameters

- `[in] config`: Configuration structure

void **wifi_prov_mgr_deinit**(void)

Stop provisioning (if running) and release resource used by the manager.

Event WIFI_PROV_DEINIT is emitted right after de-initialization is finished

If provisioning service is still active when this API is called, it first stops the service, hence emitting WIFI_PROV_END, and then performs the de-initialization

esp_err_t **wifi_prov_mgr_is_provisioned**(bool **provisioned*)

Checks if device is provisioned.

This checks if Wi-Fi credentials are present on the NVS

The Wi-Fi credentials are assumed to be kept in the same NVS namespace as used by esp_wifi component

If one were to call esp_wifi_set_config() directly instead of going through the provisioning process, this function will still yield true (i.e. device will be found to be provisioned)

Note Calling wifi_prov_mgr_start_provisioning() automatically resets the provision state, irrespective of what the state was prior to making the call.

Return

- ESP_OK : Retrieved provision state successfully
- ESP_FAIL : Wi-Fi not initialized
- ESP_ERR_INVALID_ARG : Null argument supplied
- ESP_ERR_INVALID_STATE : Manager not initialized

Parameters

- `[out] provisioned`: True if provisioned, else false

esp_err_t **wifi_prov_mgr_start_provisioning**(*wifi_prov_security_t* *security*, **const** char **pop*, **const** char **service_name*, **const** char **service_key*)

Start provisioning service.

This starts the provisioning service according to the scheme configured at the time of initialization. For scheme :

- wifi_prov_scheme_ble : This starts protocomm_ble, which internally initializes BLE transport and starts GATT server for handling provisioning requests
- wifi_prov_scheme_softap : This activates SoftAP mode of Wi-Fi and starts protocomm_httpd, which internally starts an HTTP server for handling provisioning requests (If mDNS is active it also starts advertising service with type _esp_wifi_prov._tcp)

Event WIFI_PROV_START is emitted right after provisioning starts without failure

Note This API will start provisioning service even if device is found to be already provisioned, i.e. wifi_prov_mgr_is_provisioned() yields true

Return

- ESP_OK : Provisioning started successfully
- ESP_FAIL : Failed to start provisioning service
- ESP_ERR_INVALID_STATE : Provisioning manager not initialized or already started

Parameters

- `[in] security`: Specify which protocomm security scheme to use :
  - WIFI_PROV_SECURITY_0 : For no security
  - WIFI_PROV_SECURITY_1 : x25519 secure handshake for session establishment followed by AES-CTR encryption of provisioning messages
- `[in] pop`: Pointer to proof of possession string (NULL if not needed). This is relevant only for protocomm security 1, in which case it is used for authenticating secure session
- `[in] service_name`: Unique name of the service. This translates to:
  - Wi-Fi SSID when provisioning mode is softAP
  - Device name when provisioning mode is BLE

- `[in] service_key`: Key required by client to access the service (NULL if not needed). This translates to:
  - Wi-Fi password when provisioning mode is softAP
  - ignored when provisioning mode is BLE

void **wifi_prov_mgr_stop_provisioning**(void)

Stop provisioning service.

If provisioning service is active, this API will initiate a process to stop the service and return. Once the service actually stops, the event WIFI_PROV_END will be emitted.

If wifi_prov_mgr_deinit() is called without calling this API first, it will automatically stop the provisioning service and emit the WIFI_PROV_END, followed by WIFI_PROV_DEINIT, before returning.

This API will generally be used along with wifi_prov_mgr_disable_auto_stop() in the scenario when the main application has registered its own endpoints, and wishes that the provisioning service is stopped only when some protocomm command from the client side application is received.

Calling this API inside an endpoint handler, with sufficient cleanup_delay, will allow the response / acknowledgment to be sent successfully before the underlying protocomm service is stopped.

Cleaup_delay is set when calling wifi_prov_mgr_disable_auto_stop(). If not specified, it defaults to 1000ms.

For straightforward cases, using this API is usually not necessary as provisioning is stopped automatically once WIFI_PROV_CRED_SUCCESS is emitted. Stopping is delayed (maximum 30 seconds) thus allowing the client side application to query for Wi-Fi state, i.e. after receiving the first query and sending `Wi-Fi state connected` response the service is stopped immediately.

void **wifi_prov_mgr_wait**(void)

Wait for provisioning service to finish.

Calling this API will block until provisioning service is stopped i.e. till event WIFI_PROV_END is emitted.

This will not block if provisioning is not started or not initialized.

esp_err_t **wifi_prov_mgr_disable_auto_stop**(uint32_t *cleanup_delay*)

Disable auto stopping of provisioning service upon completion.

By default, once provisioning is complete, the provisioning service is automatically stopped, and all endpoints (along with those registered by main application) are deactivated.

This API is useful in the case when main application wishes to close provisioning service only after it receives some protocomm command from the client side app. For example, after connecting to Wi-Fi, the device may want to connect to the cloud, and only once that is successfully, the device is said to be fully configured. But, then it is upto the main application to explicitly call wifi_prov_mgr_stop_provisioning() later when the device is fully configured and the provisioning service is no longer required.

Note This must be called before executing wifi_prov_mgr_start_provisioning()

Return

- ESP_OK : Success
- ESP_ERR_INVALID_STATE : Manager not initialized or provisioning service already started

Parameters

- `[in] cleanup_delay`: Sets the delay after which the actual cleanup of transport related resources is done after a call to wifi_prov_mgr_stop_provisioning() returns. Minimum allowed value is 100ms. If not specified, this will default to 1000ms.

esp_err_t **wifi_prov_mgr_set_app_info**(**const** char **label*, **const** char **version*, **const** char ***capabilities*, size_t *total_capabilities*)

Set application version and capabilities in the JSON data returned by proto-ver endpoint.

This function can be called multiple times, to specify information about the various application specific services running on the device, identified by unique labels.

The provisioning service itself registers an entry in the JSON data, by the label "prov", containing only provisioning service version and capabilities. Application services should use a label other than "prov" so as not to overwrite this.

Note This must be called before executing wifi_prov_mgr_start_provisioning()

Return

- ESP_OK : Success
- ESP_ERR_INVALID_STATE : Manager not initialized or provisioning service already started
- ESP_ERR_NO_MEM : Failed to allocate memory for version string
- ESP_ERR_INVALID_ARG : Null argument

Parameters

- `[in] label`: String indicating the application name.
- `[in] version`: String indicating the application version. There is no constraint on format.
- `[in] capabilities`: Array of strings with capabilities. These could be used by the client side app to know the application registered endpoint capabilities
- `[in] total_capabilities`: Size of capabilities array

esp_err_t **wifi_prov_mgr_endpoint_create**(**const** char **ep_name*)

Create an additional endpoint and allocate internal resources for it.

This API is to be called by the application if it wants to create an additional endpoint. All additional endpoints will be assigned UUIDs starting from 0xFF54 and so on in the order of execution.

protocomm handler for the created endpoint is to be registered later using wifi_prov_mgr_endpoint_register() after provisioning has started.

Note This API can only be called BEFORE provisioning is started

Note Additional endpoints can be used for configuring client provided parameters other than Wi-Fi credentials, that are necessary for the main application and hence must be set prior to starting the application

Note After session establishment, the additional endpoints must be targeted first by the client side application before sending Wi-Fi configuration, because once Wi-Fi configuration finishes the provisioning service is stopped and hence all endpoints are unregistered

Return

- ESP_OK : Success
- ESP_FAIL : Failure

Parameters

- `[in] ep_name`: unique name of the endpoint

esp_err_t **wifi_prov_mgr_endpoint_register**(**const** char **ep_name*, *protocomm_req_handler_t handler*, void **user_ctx*)

Register a handler for the previously created endpoint.

This API can be called by the application to register a protocomm handler to any endpoint that was created using wifi_prov_mgr_endpoint_create().

Note This API can only be called AFTER provisioning has started

Note Additional endpoints can be used for configuring client provided parameters other than Wi-Fi credentials, that are necessary for the main application and hence must be set prior to starting the application

Note After session establishment, the additional endpoints must be targeted first by the client side application before sending Wi-Fi configuration, because once Wi-Fi configuration finishes the provisioning service is stopped and hence all endpoints are unregistered

Return

- ESP_OK : Success
- ESP_FAIL : Failure

Parameters

- `[in] ep_name`: Name of the endpoint
- `[in] handler`: Endpoint handler function
- `[in] user_ctx`: User data

void **wifi_prov_mgr_endpoint_unregister**(**const** char **ep_name*)

Unregister the handler for an endpoint.

This API can be called if the application wants to selectively unregister the handler of an endpoint while the provisioning is still in progress.

All the endpoint handlers are unregistered automatically when the provisioning stops.

Parameters

- `[in] ep_name`: Name of the endpoint

esp_err_t **wifi_prov_mgr_event_handler**(void *ctx, *system_event_t* *event)

Event handler for provisioning manager.

This is called from the main event handler and controls the provisioning manager's internal state machine depending on incoming Wi-Fi events

Note : This function is DEPRECATED, because events are now handled internally using the event loop library, esp_event. Calling this will do nothing and simply return ESP_OK.

Return

- ESP_OK : Event handled successfully

Parameters

- `[in] ctx`: Event context data
- `[in] event`: Event info

esp_err_t **wifi_prov_mgr_get_wifi_state**(*wifi_prov_sta_state_t* *state)

Get state of Wi-Fi Station during provisioning.

Return

- ESP_OK : Successfully retrieved Wi-Fi state
- ESP_FAIL : Provisioning app not running

Parameters

- `[out] state`: Pointer to wifi_prov_sta_state_t variable to be filled

esp_err_t **wifi_prov_mgr_get_wifi_disconnect_reason**(*wifi_prov_sta_fail_reason_t* *reason)

Get reason code in case of Wi-Fi station disconnection during provisioning.

Return

- ESP_OK : Successfully retrieved Wi-Fi disconnect reason
- ESP_FAIL : Provisioning app not running

Parameters

- `[out] reason`: Pointer to wifi_prov_sta_fail_reason_t variable to be filled

esp_err_t **wifi_prov_mgr_configure_sta**(*wifi_config_t* *wifi_cfg)

Runs Wi-Fi as Station with the supplied configuration.

Configures the Wi-Fi station mode to connect to the AP with SSID and password specified in config structure and sets Wi-Fi to run as station.

This is automatically called by provisioning service upon receiving new credentials.

If credentials are to be supplied to the manager via a different mode other than through protocomm, then this API needs to be called.

Event WIFI_PROV_CRED_RECV is emitted after credentials have been applied and Wi-Fi station started

Return

- ESP_OK : Wi-Fi configured and started successfully
- ESP_FAIL : Failed to set configuration

Parameters

- `[in] wifi_cfg`: Pointer to Wi-Fi configuration structure

esp_err_t **wifi_prov_mgr_reset_sm_state_on_failure**(void)

Reset internal state machine and clear provisioned credentials.

This API can be used to restart provisioning in case invalid credentials are entered.

Return

- ESP_OK : Reset provisioning state machine successfully
- ESP_FAIL : Failed to reset provisioning state machine
- ESP_ERR_INVALID_STATE : Manager not initialized

Structures

struct wifi_prov_event_handler_t

Event handler that is used by the manager while provisioning service is active.

Public Members

wifi_prov_cb_func_t **event_cb**

Callback function to be executed on provisioning events

void ***user_data**

User context data to pass as parameter to callback function

struct wifi_prov_scheme

Structure for specifying the provisioning scheme to be followed by the manager.

Note Ready to use schemes are available:

- wifi_prov_scheme_ble : for provisioning over BLE transport + GATT server
- wifi_prov_scheme_softap : for provisioning over SoftAP transport + HTTP server
- wifi_prov_scheme_console : for provisioning over Serial UART transport + Console (for debugging)

Public Members

esp_err_t (***prov_start**) (*protocomm_t* *pc, void *config)

Function which is to be called by the manager when it is to start the provisioning service associated with a protocomm instance and a scheme specific configuration

esp_err_t (***prov_stop**) (*protocomm_t* *pc)

Function which is to be called by the manager to stop the provisioning service previously associated with a protocomm instance

void *(***new_config**) (void)

Function which is to be called by the manager to generate a new configuration for the provisioning service, that is to be passed to *prov_start()*

void (***delete_config**) (void *config)

Function which is to be called by the manager to delete a configuration generated using *new_config()*

esp_err_t (***set_config_service**) (void *config, **const** char *service_name, **const** char *service_key)

Function which is to be called by the manager to set the service name and key values in the configuration structure

esp_err_t (***set_config_endpoint**) (void *config, **const** char *endpoint_name, uint16_t uuid)

Function which is to be called by the manager to set a protocomm endpoint with an identifying name and UUID in the configuration structure

wifi_mode_t **wifi_mode**

Sets mode of operation of Wi-Fi during provisioning This is set to :

- WIFI_MODE_APSTA for SoftAP transport
- WIFI_MODE_STA for BLE transport

struct wifi_prov_mgr_config_t

Structure for specifying the manager configuration.

Public Members

wifi_prov_scheme_t **scheme**

Provisioning scheme to use. Following schemes are already available:

- wifi_prov_scheme_ble : for provisioning over BLE transport + GATT server

- wifi_prov_scheme_softap : for provisioning over SoftAP transport + HTTP server + mDNS (optional)
- wifi_prov_scheme_console : for provisioning over Serial UART transport + Console (for debugging)

wifi_prov_event_handler_t **scheme_event_handler**
Event handler required by the scheme for incorporating scheme specific behavior while provisioning manager is running. Various options may be provided by the scheme for setting this field. Use WIFI_PROV_EVENT_HANDLER_NONE when not used. When using scheme wifi_prov_scheme_ble, the following options are available:

- WIFI_PROV_SCHEME_BLE_EVENT_HANDLER_FREE_BTDM
- WIFI_PROV_SCHEME_BLE_EVENT_HANDLER_FREE_BLE
- WIFI_PROV_SCHEME_BLE_EVENT_HANDLER_FREE_BT

wifi_prov_event_handler_t **app_event_handler**
Event handler that can be set for the purpose of incorporating application specific behavior. Use WIFI_PROV_EVENT_HANDLER_NONE when not used.

Macros

WIFI_PROV_EVENT_HANDLER_NONE
Event handler can be set to none if not used.

Type Definitions

typedef void (***wifi_prov_cb_func_t**) (void *user_data, *wifi_prov_cb_event_t* event, void *event_data)

typedef struct *wifi_prov_scheme* **wifi_prov_scheme_t**
Structure for specifying the provisioning scheme to be followed by the manager.

Note Ready to use schemes are available:
- wifi_prov_scheme_ble : for provisioning over BLE transport + GATT server
- wifi_prov_scheme_softap : for provisioning over SoftAP transport + HTTP server
- wifi_prov_scheme_console : for provisioning over Serial UART transport + Console (for debugging)

typedef enum *wifi_prov_security* **wifi_prov_security_t**
Security modes supported by the Provisioning Manager.

These are same as the security modes provided by protocomm

Enumerations

enum wifi_prov_cb_event_t
Events generated by manager.

These events are generated in order of declaration and, for the stretch of time between initialization and de-initialization of the manager, each event is signaled only once

Values:

WIFI_PROV_INIT
Emitted when the manager is initialized

WIFI_PROV_START
Indicates that provisioning has started

WIFI_PROV_CRED_RECV
Emitted when Wi-Fi AP credentials are received via `protocomm` endpoint `wifi_config`. The event data in this case is a pointer to the corresponding *`wifi_sta_config_t`* structure

WIFI_PROV_CRED_FAIL
Emitted when device fails to connect to the AP of which the credentials were received earlier on event `WIFI_PROV_CRED_RECV`. The event data in this case is a pointer to the disconnection reason code with type `wifi_prov_sta_fail_reason_t`

WIFI_PROV_CRED_SUCCESS
Emitted when device successfully connects to the AP of which the credentials were received earlier on event `WIFI_PROV_CRED_RECV`

WIFI_PROV_END
Signals that provisioning service has stopped

WIFI_PROV_DEINIT
Signals that manager has been de-initialized

enum wifi_prov_security
Security modes supported by the Provisioning Manager.

These are same as the security modes provided by protocomm

Values:

WIFI_PROV_SECURITY_0 = 0
No security (plain-text communication)

WIFI_PROV_SECURITY_1
This secure communication mode consists of X25519 key exchange

- proof of possession (pop) based authentication
- AES-CTR encryption

Header File

- wifi_provisioning/include/wifi_provisioning/scheme_ble.h

Functions

void **wifi_prov_scheme_ble_event_cb_free_btdm**(void **user_data*, *wifi_prov_cb_event_t event*, void **event_data*)

void **wifi_prov_scheme_ble_event_cb_free_ble**(void **user_data*, *wifi_prov_cb_event_t event*, void **event_data*)

void **wifi_prov_scheme_ble_event_cb_free_bt**(void **user_data*, *wifi_prov_cb_event_t event*, void **event_data*)

esp_err_t **wifi_prov_scheme_ble_set_service_uuid**(uint8_t **uuid128*)
Set the 128 bit GATT service UUID used for provisioning.

This API is used to override the default 128 bit provisioning service UUID, which is 0000ffff-0000-1000-8000-00805f9b34fb.

This must be called before starting provisioning, i.e. before making a call to wifi_prov_mgr_start_provisioning(), otherwise the default UUID will be used.

Note The data being pointed to by the argument must be valid atleast till provisioning is started. Upon start, the manager will store an internal copy of this UUID, and this data can be freed or invalidated afterwords.

Return
- ESP_OK : Success
- ESP_ERR_INVALID_ARG : Null argument

Parameters
- `[in] uuid128`: A custom 128 bit UUID

esp_err_t **wifi_prov_scheme_ble_set_mfg_data**(uint8_t **mfg_data*, ssize_t *mfg_data_len*)
Set manufacturer specific data in scan response.

This must be called before starting provisioning, i.e. before making a call to wifi_prov_mgr_start_provisioning().

Note It is important to understand that length of custom manufacturer data should be within limits. The manufacturer data goes into scan response along with BLE device name. By default, BLE device name length is of 11 Bytes, however it can vary as per application use case. So, one has to honour the scan

response data size limits i.e. (mfg_data_len + 2) < 31 - (device_name_length + 2). If the mfg_data length exceeds this limit, the length will be truncated.

Return

- ESP_OK : Success
- ESP_ERR_INVALID_ARG : Null argument

Parameters

- `[in] mfg_data`: Custom manufacturer data
- `[in] mfg_data_len`: Manufacturer data length

Macros

WIFI_PROV_SCHEME_BLE_EVENT_HANDLER_FREE_BTDM
WIFI_PROV_SCHEME_BLE_EVENT_HANDLER_FREE_BLE

WIFI_PROV_SCHEME_BLE_EVENT_HANDLER_FREE_BT

Header File

- wifi_provisioning/include/wifi_provisioning/scheme_softap.h

Functions

void **wifi_prov_scheme_softap_set_httpd_handle**(void **handle*)

Provide HTTPD Server handle externally.

Useful in cases wherein applications need the webserver for some different operations, and do not want the wifi provisioning component to start/stop a new instance.

Note This API should be called before wifi_prov_mgr_start_provisioning()

Parameters

- `[in] handle`: Handle to HTTPD server instance

Header File

- wifi_provisioning/include/wifi_provisioning/scheme_console.h

Header File

- wifi_provisioning/include/wifi_provisioning/wifi_config.h

Functions

esp_err_t **wifi_prov_config_data_handler**(uint32_t *session_id*, **const** uint8_t **inbuf*, ssize_t *inlen*, uint8_t ***outbuf*, ssize_t **outlen*, void **priv_data*)

Handler for receiving and responding to requests from master.

This is to be registered as the `wifi_config` endpoint handler (protocomm `protocomm_req_handler_t`) using `protocomm_add_endpoint()`

Structures

struct wifi_prov_sta_conn_info_t

WiFi STA connected status information.

Public Members

char **ip_addr**[**IP4ADDR_STRLEN_MAX**]

IP Address received by station

char **bssid**[6]
BSSID of the AP to which connection was estalished

char **ssid**[33]
SSID of the to which connection was estalished

uint8_t **channel**
Channel of the AP

uint8_t **auth_mode**
Authorization mode of the AP

struct wifi_prov_config_get_data_t
WiFi status data to be sent in response to `get_status` request from master.

Public Members

wifi_prov_sta_state_t **wifi_state**
WiFi state of the station

wifi_prov_sta_fail_reason_t **fail_reason**
Reason for disconnection (valid only when `wifi_state` is `WIFI_STATION_DISCONNECTED`)

wifi_prov_sta_conn_info_t **conn_info**
Connection information (valid only when `wifi_state` is `WIFI_STATION_CONNECTED`)

struct wifi_prov_config_set_data_t
WiFi config data received by slave during `set_config` request from master.

Public Members

char **ssid**[33]
SSID of the AP to which the slave is to be connected

char **password**[64]
Password of the AP

char **bssid**[6]
BSSID of the AP

uint8_t **channel**
Channel of the AP

struct wifi_prov_config_handlers
Internal handlers for receiving and responding to protocomm requests from master.

This is to be passed as priv_data for protocomm request handler (refer to `wifi_prov_config_data_handler()`) when calling `protocomm_add_endpoint()`.

Public Members

esp_err_t (***get_status_handler**)(*wifi_prov_config_get_data_t* *resp_data, *wifi_prov_ctx_t* **ctx)
Handler function called when connection status of the slave (in WiFi station mode) is requested

esp_err_t (***set_config_handler**)(**const** *wifi_prov_config_set_data_t* *req_data, *wifi_prov_ctx_t* **ctx)
Handler function called when WiFi connection configuration (eg. AP SSID, password, etc.) of the slave (in WiFi station mode) is to be set to user provided values

esp_err_t (***apply_config_handler**)(*wifi_prov_ctx_t* **ctx)
Handler function for applying the configuration that was set in `set_config_handler`. After applying the station may get connected to the AP or may fail to connect. The slave must be ready to convey the updated connection status information when `get_status_handler` is invoked again by the master.

wifi_prov_ctx_t ***ctx**
Context pointer to be passed to above handler functions upon invocation

Type Definitions

typedef struct wifi_prov_ctx **wifi_prov_ctx_t**
Type of context data passed to each get/set/apply handler function set in *wifi_prov_config_handlers* structure.

This is passed as an opaque pointer, thereby allowing it be defined later in application code as per requirements.

typedef struct *wifi_prov_config_handlers* **wifi_prov_config_handlers_t**
Internal handlers for receiving and responding to protocomm requests from master.

This is to be passed as priv_data for protocomm request handler (refer to `wifi_prov_config_data_handler()`) when calling `protocomm_add_endpoint()`.

Enumerations

enum wifi_prov_sta_state_t
WiFi STA status for conveying back to the provisioning master.

Values:

WIFI_PROV_STA_CONNECTING

WIFI_PROV_STA_CONNECTED

WIFI_PROV_STA_DISCONNECTED

enum wifi_prov_sta_fail_reason_t
WiFi STA connection fail reason.

Values:

WIFI_PROV_STA_AUTH_ERROR

WIFI_PROV_STA_AP_NOT_FOUND

本部分的 API 示例代码存放在 ESP-IDF 示例项目的 provisioning 目录下。

2.6 存储 API

2.6.1 SPI Flash API

概述

SPI Flash 组件提供外部 flash 数据读取、写入、擦除和内存映射相关的 API 函数，同时也提供了更高层级的，面向分区的 API 函数（定义在分区表 中）。

与 ESP-IDF V4.0 之前的 API 不同，这一版 *esp_flash_** API 功能并不局限于主 SPI Flash 芯片（即运行程序的 SPI Flash 芯片）。使用不同的芯片指针，您可以通过 SPI0/1 或 SPI2/SPI3 总线访问外部 flash。

注解： 大多数 *esp_flash_** API 使用 SPI1，SPI2 等外设而非通过 SPI0 上的 cache。这使得它们不仅能访问主 flash，也能访问外部 flash 。而由于 cache 的限制，所有经过 cache 的操作都只能对 flash 进行。这些操作的地址同样受到 cache 能力的限制。Cache 无法访问外部 flash 或者高于它能力的地址段。这些 cache 操作包括：mmap ，加密读写，执行代码或者访问在 flash 中的变量。

注解： ESP-IDF V4.0 之后的 flash API 不再是原子的。因此，如果 flash 操作地址有重叠，且写操作与读操作同时执行，读操作可能会返回一部分写入之前的数据，返回一部分写入之后的数据。

Kconfig 选项*CONFIG_SPI_FLASH_USE_LEGACY_IMPL* 可将 `spi_flash_*` 函数切换至 ESP-IDF V4.0 之前的实现。但是，如果同时使用新旧 API，代码量可能会增多。

即便未启用*CONFIG_SPI_FLASH_USE_LEGACY_IMPL*，加密读取和加密写入操作也均使用旧实现。因此，仅有主 flash 芯片支持加密操作，外接（经 SPI1 使用其他不同片选访问，或经其它 SPI 总线访问）的 flash 芯片则不支持加密操作。也仅有主 flash 支持从 cache 当中读取，因为这是由硬件决定的。

初始化 Flash 设备

在使用 `esp_flash_*` API 之前，您需要在 SPI 总线上初始化芯片。

1. 调用*`spi_bus_initialize()`* 初始化 SPI 总线，此函数将初始化总线上设备间共享的资源，如 I/O、DMA 及中断等。
2. 调用*`spi_bus_add_flash_device()`* 将 flash 设备连接到总线上。然后分配内存，填充 `esp_flash_t` 结构体，同时初始化 CS I/O。
3. 调用*`esp_flash_init()`* 与芯片进行通信。后续操作会依据芯片类型不同而有差异。

注解： 目前，多个 flash 芯片可连接到同一总线。但尚不支持在同一个 SPI 总线上使用 `esp_flash_*` 和 `spi_device_*` 设备。

SPI Flash 访问 API

如下所示为处理 flash 中数据的函数集：

- *`esp_flash_read()`*：将数据从 flash 读取到 RAM；
- *`esp_flash_write()`*：将数据从 RAM 写入到 flash；
- *`esp_flash_erase_region()`*：擦除 flash 中指定区域的数据；
- *`esp_flash_erase_chip()`*：擦除整个 flash；
- `esp_flash_get_chip_size()`：返回 menuconfig 中设置的 flash 芯片容量（以字节为单位）。

一般来说，请尽量避免对主 SPI flash 芯片直接使用原始 SPI flash 函数，如需对主 SPI flash 芯片进行操作，请使用分区专用函数。

SPI Flash 容量

SPI flash 容量存储于引导程序映像头部（烧录偏移量为 0x1000）的一个字段。

默认情况下，引导程序写入 flash 时，esptool.py 将引导程序写入 flash 时，会自动检测 SPI flash 容量，同时使用正确容量更新引导程序的头部。您也可以在工程配置中设置 `CONFIG_ESPTOOLPY_FLASHSIZE`，生成固定的 flash 容量。

如需在运行时覆盖已配置的 flash 容量，请配置 `g_rom_flashchip` 结构中的 `chip_size`。`esp_flash_*` 函数使用此容量（于软件和 ROM 中）进行边界检查。

SPI1 Flash 并发约束

SPI1 Flash 并发约束 指令/数据 cache（用以执行固件）与 SPI1 外设（由像 SPI Flash 驱动一样的驱动程序控制）共享 SPI0/1 总线。因此，对 SPI1 外设的操作会对整个系统造成显著的影响。这类操作包括调用 SPI Flash API 或者其他 SPI1 总线上的驱动，任何 flash 操作（如读取、写入、擦除）或者其他用户定义的 SPI 操作，无论是对主 flash 或者其他各类的 SPI 从机。

在 ESP32 上，flash 读取/写入/擦除时 cache 必须被禁用。

当 cache 被禁用时 这意味着当 flash 擦写操作发生时，所有的 CPU 都只能执行 IRAM 中的代码，而且必须从 DRAM 中读取数据。如果您使用本文档中 API 函数，上述限制将自动生效且透明（无需您额外关注），但这些限制可能会影响系统中的其他任务的性能。

除 SPI0/1 以外的 SPI 总线上的其它 flash 芯片则不受这种限制。

请参阅*应用程序内存分布*，查看 IRAM、DRAM 和 flash cache 的区别。

另请参阅*OS 函数* 和*SPI Bus Lock* 。

IRAM 安全中断处理程序 如果您需要在 flash 操作期间运行中断处理程序（比如低延迟操作），请在*注册中断处理程序* 时设置 `ESP_INTR_FLAG_IRAM`。

请确保中断处理程序访问的所有数据和函数（包括其调用的数据和函数）都存储在 IRAM 或 DRAM 中。有两种方法可供使用：

使用属性宏 为函数添加 `IRAM_ATTR` 属性：

```
#include "esp_attr.h"

void IRAM_ATTR gpio_isr_handler(void* arg)
{
    // ...
}
```

为常量添加 `DRAM_ATTR` 和 `DRAM_STR` 属性：

```
void IRAM_ATTR gpio_isr_handler(void* arg)
{
   const static DRAM_ATTR uint8_t INDEX_DATA[] = { 45, 33, 12, 0 };
   const static char *MSG = DRAM_STR("I am a string stored in RAM");
}
```

辨别哪些数据应标记为 `DRAM_ATTR` 可能会比较困难，除非明确标记为 `DRAM_ATTR`，否则编译器依然可能将某些变量或表达式当做常量（即便没有 `const` 标记），并将其放入 flash。

使用链接脚本 参见*链接脚本生成机制*。

如果函数或符号未被正确放入 IRAM/DRAM 中，当中断处理程序在 flash 操作期间从 flash cache 中读取数据，则会产生非法指令异常（这是因为代码未被正确放入 IRAM）或读取垃圾数据（这是因为常数未被正确放入 DRAM），而导致崩溃。

注意： 指令/数据 cache（用以执行固件）与 SPI1 外设（由像 SPI Flash 驱动一样的驱动程序控制）共享 SPI0/1 总线。因此，在 SPI1 总线上调用 SPI Flash API （包括访问主 flash ）会对整个系统造成显著的影响。更多细节，参见*SPI1 Flash 并发约束* 。

分区表 API

ESP-IDF 工程使用分区表保存 SPI flash 各区信息，包括引导程序、各种应用程序二进制文件、数据及文件系统等。请参考*分区表*，查看详细信息。

该组件在 `esp_partition.h` 中声明了一些 API 函数，用以枚举在分区表中找到的分区，并对这些分区执行操作：

- *`esp_partition_find()`*：在分区表中查找特定类型的条目，返回一个不透明迭代器；
- *`esp_partition_get()`*：返回一个结构，描述给定迭代器的分区；
- *`esp_partition_next()`*：将迭代器移至下一个找到的分区；
- *`esp_partition_iterator_release()`*：释放 `esp_partition_find` 中返回的迭代器；

- *esp_partition_find_first()*：返回一个结构，描述 esp_partition_find 中找到的第一个分区；
- *esp_partition_read()*、*esp_partition_write()* 和*esp_partition_erase_range()* 在分区边界内执行，等同于 spi_flash_read()、spi_flash_write() 和 spi_flash_erase_range()。

注解： 请在应用程序代码中使用上述 esp_partition_* API 函数，而非低层级的 esp_flash_* API 函数。分区表 API 函数根据存储在分区表中的数据，进行边界检查并计算在 flash 中的正确偏移量。

SPI Flash 加密

您可以对 SPI flash 内容进行加密，并在硬件层对其进行透明解密。

请参阅*Flash 加密*，查看详细信息。

内存映射 API

ESP32 内存硬件可以将 flash 部分区域映射到指令地址空间和数据地址空间，此映射仅用于读操作。不能通过写入 flash 映射的存储区域来改变 flash 中内容。

Flash 以 64 KB 页为单位进行地址映射。内存映射硬件既可将 flash 映射到数据地址空间，也能映射到指令地址空间。请参考《ESP32 技术参考手册》查看内存映射硬件的详细信息及有关限制。

请注意，有些页被用于将应用程序映射到内存中，因此实际可用的页会少于硬件提供的总数。

Flash 加密 启用时，使用内存映射区域从 flash 读取数据是解密 flash 的唯一方法，解密需在硬件层进行。

内存映射 API 在 esp_spi_flash.h 和 esp_partition.h 中声明：

- spi_flash_mmap()：将 flash 物理地址区域映射到 CPU 指令空间或数据空间；
- spi_flash_munmap()：取消上述区域的映射；
- *esp_partition_mmap()*：将分区的一部分映射至 CPU 指令空间或数据空间；

spi_flash_mmap() 和*esp_partition_mmap()* 的区别如下：

- spi_flash_mmap()：需要给定一个 64 KB 对齐的物理地址；
- *esp_partition_mmap()*：给定分区内任意偏移量即可，此函数根据需要将返回的指针调整至指向映射内存。

内存映射以页为单位，即使传递给 esp_partition_mmap 的是一个分区，分区外的数据也是也是可以被读取到的，不会受到分区边界的影响。

注解： 由于 mmap 是由 cache 支持的，因此，mmap 也仅能用在主 flash 上。

实现

esp_flash_t 结构包含芯片数据和该 API 的三个重要部分：

1. 主机驱动，为访问芯片提供硬件支持；
2. 芯片驱动，为不同芯片提供兼容性服务；
3. OS 函数，在不同阶段（一级或二级 Boot 或者应用程序阶段）为部分 OS 函数提供支持（如一些锁、延迟）。

主机驱动 主机驱动依赖 `hal/include/hal` 文件夹下 `spi_flash_types.h` 定义的 `spi_flash_host_driver_t` 接口。该接口提供了一些与芯片通信常用的函数。

在 SPI HAL 文件中，有些函数是基于现有的 ESP32 memory-spi 来实现的。但是，由于 ESP32 速度限制，HAL 层无法提供某些读命令的高速实现（所以这些命令根本没有在 HAL 的文件中被实现）。`memspi_host_driver.h` 和 `.c` 文件使用 HAL 提供的 `common_command` 函数实现上述读命令的高速版本，并将所有它实现的及 HAL 函数封装为 `spi_flash_host_driver_t` 供更上层调用。

您也可以实现自己的主机驱动，甚至只通过简单的 GPIO。只要实现了 `spi_flash_host_driver_t` 中所有函数，不管底层硬件是什么，esp_flash API 都可以访问 flash。

芯片驱动 芯片驱动在 `spi_flash_chip_driver.h` 中进行定义，并将主机驱动提供的基本函数进行封装以供 API 层使用。

有些操作需在执行前先发送命令，或在执行后读取状态，因此有些芯片需要不同的命令或值以及通信方式。

`generic chip` 芯片代表了常见的 flash 芯片，其他芯片驱动可以在通用芯片的基础上进行开发。

芯片驱动依赖主机驱动。

OS 函数 OS 函数层提供访问锁和延迟的方法。

该锁定用于解决 SPI Flash 芯片访问和其他函数之间的冲突。例如，经 SPI0/1 访问 flash 芯片时，应当禁用 cache（平时用于取代码和 PSRAM 数据）。另一种情况是，一些没有 CS 线或者 CS 线受软件控制的设备（如通过 SPI 接口的 SD 卡控制）需要在一段时间内独占总线。

延时则用于某些长时操作，需要主机处于等待状态或执行轮询。

顶层 API 将芯片驱动和 OS 函数封装成一个完整的组件，并提供参数检查。

另请参考

- 分区表
- *OTA API* 提供了高层 API 用于更新存储在 flash 中的 app 固件。
- *NVS API* 提供了结构化 API 用于存储 SPI flash 中的碎片数据。

实现细节

必须确保操作期间，两个 CPU 均未从 flash 运行代码，实现细节如下：

- 单核模式下，SDK 在执行 flash 操作前将禁用中断或调度算法。
- 双核模式下，实现细节更为复杂，SDK 需确保两个 CPU 均未运行 flash 代码。

如果有 SPI flash API 在 CPU A（PRO 或 APP）上调用，它使用 `esp_ipc_call` API 在 CPU B 上运行 `spi_flash_op_block_func` 函数。`esp_ipc_call` API 在 CPU B 上唤醒一个高优先级任务，即运行 `spi_flash_op_block_func` 函数。运行该函数将禁用 CPU B 上的 cache，并使用 `s_flash_op_can_start` 旗帜来标志 cache 已禁用。然后，CPU A 上的任务也会禁用 cache 并继续执行 flash 操作。

执行 flash 操作时，CPU A 和 CPU B 仍然可以执行中断操作。默认中断代码均存储于 RAM 中，如果新添加了中断分配 API，则应添加一个标志位以请求在 flash 操作期间禁用该新分配的中断。

Flash 操作完成后，CPU A 上的函数将设置另一标志位，即 `s_flash_op_complete`，用以通知 CPU B 上的任务可以重新启用 cache 并释放 CPU。接着，CPU A 上的函数也重新启用 cache，并将控制权返还给调用者。

另外，所有 API 函数均受互斥量 `s_flash_op_mutex` 保护。

在单核环境中（启用*CONFIG_FREERTOS_UNICORE*），您需要禁用上述两个 cache 以防发生 CPU 间通信。

SPI Flash API 参考

Header File

- spi_flash/include/esp_flash_spi_init.h

Functions

esp_err_t **spi_bus_add_flash_device**(*esp_flash_t* ***out_chip*, **const** *esp_flash_spi_device_config_t* **config*)

Add a SPI Flash device onto the SPI bus.

The bus should be already initialized by `spi_bus_initialization`.

Return

- ESP_ERR_INVALID_ARG: out_chip is NULL, or some field in the config is invalid.
- ESP_ERR_NO_MEM: failed to allocate memory for the chip structures.
- ESP_OK: success.

Parameters

- `out_chip`: Pointer to hold the initialized chip.
- `config`: Configuration of the chips to initialize.

esp_err_t **spi_bus_remove_flash_device**(*esp_flash_t* **chip*)

Remove a SPI Flash device from the SPI bus.

Return

- ESP_ERR_INVALID_ARG: The chip is invalid.
- ESP_OK: success.

Parameters

- `chip`: The flash device to remove.

Structures

struct esp_flash_spi_device_config_t

Configurations for the SPI Flash to init.

Public Members

spi_host_device_t **host_id**

Bus to use.

int **cs_io_num**

GPIO pin to output the CS signal.

esp_flash_io_mode_t **io_mode**

IO mode to read from the Flash.

esp_flash_speed_t **speed**

Speed of the Flash clock.

int **input_delay_ns**

Input delay of the data pins, in ns. Set to 0 if unknown.

int **cs_id**

CS line ID, ignored when not `host_id` is not SPI1_HOST, or `CONFIG_SPI_FLASH_SHARE_SPI1_BUS` is enabled. In this case, the CS line used is automatically assigned by the SPI bus lock.

Header File

- spi_flash/include/esp_flash.h

Functions

esp_err_t **esp_flash_init**(*esp_flash_t *chip*)

Initialise SPI flash chip interface.

This function must be called before any other API functions are called for this chip.

Note Only the `host` and `read_mode` fields of the chip structure must be initialised before this function is called. Other fields may be auto-detected if left set to zero or NULL.

Note If the chip->drv pointer is NULL, chip chip_drv will be auto-detected based on its manufacturer & product IDs. See `esp_flash_registered_flash_drivers` pointer for details of this process.

Return ESP_OK on success, or a flash error code if initialisation fails.

Parameters

- `chip`: Pointer to SPI flash chip to use. If NULL, esp_flash_default_chip is substituted.

bool **esp_flash_chip_driver_initialized**(**const** *esp_flash_t *chip*)

Check if appropriate chip driver is set.

Return true if set, otherwise false.

Parameters

- `chip`: Pointer to SPI flash chip to use. If NULL, esp_flash_default_chip is substituted.

esp_err_t **esp_flash_read_id**(*esp_flash_t *chip*, uint32_t *out_id*)

Read flash ID via the common "RDID" SPI flash command.

ID is a 24-bit value. Lower 16 bits of 'id' are the chip ID, upper 8 bits are the manufacturer ID.

Parameters

- `chip`: Pointer to identify flash chip. Must have been successfully initialised via esp_flash_init()
- `[out] out_id`: Pointer to receive ID value.

Return ESP_OK on success, or a flash error code if operation failed.

esp_err_t **esp_flash_get_size**(*esp_flash_t *chip*, uint32_t *out_size*)

Detect flash size based on flash ID.

Note Most flash chips use a common format for flash ID, where the lower 4 bits specify the size as a power of 2. If the manufacturer doesn't follow this convention, the size may be incorrectly detected.

Return ESP_OK on success, or a flash error code if operation failed.

Parameters

- `chip`: Pointer to identify flash chip. Must have been successfully initialised via esp_flash_init()
- `[out] out_size`: Detected size in bytes.

esp_err_t **esp_flash_erase_chip**(*esp_flash_t *chip*)

Erase flash chip contents.

Return

- ESP_OK on success,
- ESP_ERR_NOT_SUPPORTED if the chip is not able to perform the operation. This is indicated by WREN = 1 after the command is sent.
- Other flash error code if operation failed.

Parameters

- `chip`: Pointer to identify flash chip. Must have been successfully initialised via esp_flash_init()

esp_err_t **esp_flash_erase_region**(*esp_flash_t *chip*, uint32_t *start*, uint32_t *len*)

Erase a region of the flash chip.

Sector size is specifyed in chip->drv->sector_size field (typically 4096 bytes.) ESP_ERR_INVALID_ARG will be returned if the start & length are not a multiple of this size.

Parameters

- `chip`: Pointer to identify flash chip. Must have been successfully initialised via esp_flash_init()
- `start`: Address to start erasing flash. Must be sector aligned.
- `len`: Length of region to erase. Must also be sector aligned.

Erase is performed using block (multi-sector) erases where possible (block size is specified in chip->drv->block_erase_size field, typically 65536 bytes). Remaining sectors are erased using individual sector erase commands.

Return

- ESP_OK on success,
- ESP_ERR_NOT_SUPPORTED if the chip is not able to perform the operation. This is indicated by WREN = 1 after the command is sent.
- Other flash error code if operation failed.

esp_err_t **esp_flash_get_chip_write_protect**(*esp_flash_t* *chip, bool *write_protected)

Read if the entire chip is write protected.

Note A correct result for this flag depends on the SPI flash chip model and chip_drv in use (via the 'chip->drv' field).

Return ESP_OK on success, or a flash error code if operation failed.

Parameters

- `chip`: Pointer to identify flash chip. Must have been successfully initialised via esp_flash_init()
- `[out] write_protected`: Pointer to boolean, set to the value of the write protect flag.

esp_err_t **esp_flash_set_chip_write_protect**(*esp_flash_t* *chip, bool *write_protect*)

Set write protection for the SPI flash chip.

Some SPI flash chips may require a power cycle before write protect status can be cleared. Otherwise, write protection can be removed via a follow-up call to this function.

Note Correct behaviour of this function depends on the SPI flash chip model and chip_drv in use (via the 'chip->drv' field).

Parameters

- `chip`: Pointer to identify flash chip. Must have been successfully initialised via esp_flash_init()
- `write_protect`: Boolean value for the write protect flag

Return ESP_OK on success, or a flash error code if operation failed.

esp_err_t **esp_flash_get_protectable_regions**(**const** *esp_flash_t* *chip, **const** *esp_flash_region_t* **out_regions, uint32_t *out_num_regions)

Read the list of individually protectable regions of this SPI flash chip.

Note Correct behaviour of this function depends on the SPI flash chip model and chip_drv in use (via the 'chip->drv' field).

Return ESP_OK on success, or a flash error code if operation failed.

Parameters

- `chip`: Pointer to identify flash chip. Must have been successfully initialised via esp_flash_init()
- `[out] out_regions`: Pointer to receive a pointer to the array of protectable regions of the chip.
- `[out] out_num_regions`: Pointer to an integer receiving the count of protectable regions in the array returned in 'regions'.

esp_err_t **esp_flash_get_protected_region**(*esp_flash_t* *chip, **const** *esp_flash_region_t* *region, bool *out_protected)

Detect if a region of the SPI flash chip is protected.

Note It is possible for this result to be false and write operations to still fail, if protection is enabled for the entire chip.

Note Correct behaviour of this function depends on the SPI flash chip model and chip_drv in use (via the 'chip->drv' field).

Return ESP_OK on success, or a flash error code if operation failed.

Parameters

- `chip`: Pointer to identify flash chip. Must have been successfully initialised via esp_flash_init()
- `region`: Pointer to a struct describing a protected region. This must match one of the regions returned from esp_flash_get_protectable_regions(…).
- `[out] out_protected`: Pointer to a flag which is set based on the protected status for this region.

esp_err_t **esp_flash_set_protected_region**(*esp_flash_t* *chip, **const** *esp_flash_region_t* *region, bool *protect*)

Update the protected status for a region of the SPI flash chip.

Note It is possible for the region protection flag to be cleared and write operations to still fail, if protection is enabled for the entire chip.

Note Correct behaviour of this function depends on the SPI flash chip model and chip_drv in use (via the 'chip->drv' field).

Return ESP_OK on success, or a flash error code if operation failed.

Parameters

- `chip`: Pointer to identify flash chip. Must have been successfully initialised via esp_flash_init()
- `region`: Pointer to a struct describing a protected region. This must match one of the regions returned from esp_flash_get_protectable_regions(…).
- `protect`: Write protection flag to set.

esp_err_t **esp_flash_read**(*esp_flash_t* *chip, void *buffer, uint32_t address, uint32_t length)

Read data from the SPI flash chip.

There are no alignment constraints on buffer, address or length.

Parameters

- `chip`: Pointer to identify flash chip. Must have been successfully initialised via esp_flash_init()
- `buffer`: Pointer to a buffer where the data will be read. To get better performance, this should be in the DRAM and word aligned.
- `address`: Address on flash to read from. Must be less than chip->size field.
- `length`: Length (in bytes) of data to read.

Note If on-chip flash encryption is used, this function returns raw (ie encrypted) data. Use the flash cache to transparently decrypt data.

Return

- ESP_OK: success
- ESP_ERR_NO_MEM: Buffer is in external PSRAM which cannot be concurrently accessed, and a temporary internal buffer could not be allocated.
- or a flash error code if operation failed.

esp_err_t **esp_flash_write**(*esp_flash_t* *chip, **const** void *buffer, uint32_t address, uint32_t length)

Write data to the SPI flash chip.

There are no alignment constraints on buffer, address or length.

Parameters

- `chip`: Pointer to identify flash chip. Must have been successfully initialised via esp_flash_init()
- `address`: Address on flash to write to. Must be previously erased (SPI NOR flash can only write bits 1->0).
- `buffer`: Pointer to a buffer with the data to write. To get better performance, this should be in the DRAM and word aligned.
- `length`: Length (in bytes) of data to write.

Return

- ESP_OK on success,
- ESP_ERR_NOT_SUPPORTED if the chip is not able to perform the operation. This is indicated by WREN = 1 after the command is sent.
- Other flash error code if operation failed.

esp_err_t **esp_flash_write_encrypted**(*esp_flash_t* *chip, uint32_t address, **const** void *buffer, uint32_t length)

Encrypted and write data to the SPI flash chip using on-chip hardware flash encryption.

Note Both address & length must be 16 byte aligned, as this is the encryption block size

Return

- ESP_OK: on success
- ESP_ERR_NOT_SUPPORTED: encrypted write not supported for this chip.
- ESP_ERR_INVALID_ARG: Either the address, buffer or length is invalid.
- or other flash error code from spi_flash_write_encrypted().

Parameters

- `chip`: Pointer to identify flash chip. Must be NULL (the main flash chip). For other chips, encrypted write is not supported.

- `address`: Address on flash to write to. 16 byte aligned. Must be previously erased (SPI NOR flash can only write bits 1->0).
- `buffer`: Pointer to a buffer with the data to write.
- `length`: Length (in bytes) of data to write. 16 byte aligned.

esp_err_t **esp_flash_read_encrypted**(*esp_flash_t* *chip, uint32_t address, void *out_buffer, uint32_t length)

Read and decrypt data from the SPI flash chip using on-chip hardware flash encryption.

Return

- ESP_OK: on success
- ESP_ERR_NOT_SUPPORTED: encrypted read not supported for this chip.
- or other flash error code from spi_flash_read_encrypted().

Parameters

- `chip`: Pointer to identify flash chip. Must be NULL (the main flash chip). For other chips, encrypted read is not supported.
- `address`: Address on flash to read from.
- `out_buffer`: Pointer to a buffer for the data to read to.
- `length`: Length (in bytes) of data to read.

static bool **esp_flash_is_quad_mode**(**const** *esp_flash_t* *chip)

Returns true if chip is configured for Quad I/O or Quad Fast Read.

Return true if flash works in quad mode, otherwise false

Parameters

- `chip`: Pointer to SPI flash chip to use. If NULL, esp_flash_default_chip is substituted.

Structures

struct esp_flash_region_t

Structure for describing a region of flash.

Public Members

uint32_t **offset**

Start address of this region.

uint32_t **size**

Size of the region.

struct esp_flash_os_functions_t

OS-level integration hooks for accessing flash chips inside a running OS.

It's in the public header because some instances should be allocated statically in the startup code. May be updated according to hardware version and new flash chip feature requirements, shouldn't be treated as public API.

For advanced developers, you may replace some of them with your implementations at your own risk.

Public Members

esp_err_t (***start**)(void *arg)

Called before commencing any flash operation. Does not need to be recursive (ie is called at most once for each call to 'end').

esp_err_t (***end**)(void *arg)

Called after completing any flash operation.

esp_err_t (***region_protected**)(void *arg, size_t start_addr, size_t size)

Called before any erase/write operations to check whether the region is limited by the OS

esp_err_t (***delay_us**)(void *arg, uint32_t us)

Delay for at least 'us' microseconds. Called in between 'start' and 'end'.

void *(***get_temp_buffer**) (void *arg, size_t reqest_size, size_t *out_size)
Called for get temp buffer when buffer from application cannot be directly read into/write from.

void (***release_temp_buffer**) (void *arg, void *temp_buf)
Called for release temp buffer.

esp_err_t (***check_yield**) (void *arg, uint32_t chip_status, uint32_t *out_request)
Yield to other tasks. Called during erase operations.

Return ESP_OK means yield needs to be called (got an event to handle), while ESP_ERR_TIMEOUT means skip yield.

esp_err_t (***yield**) (void *arg, uint32_t *out_status)
Yield to other tasks. Called during erase operations.

int64_t (***get_system_time**) (void *arg)
Called for get system time.

struct esp_flash_t
Structure to describe a SPI flash chip connected to the system.

Structure must be initialized before use (passed to esp_flash_init()). It's in the public header because some instances should be allocated statically in the startup code. May be updated according to hardware version and new flash chip feature requirements, shouldn't be treated as public API.

For advanced developers, you may replace some of them with your implementations at your own risk.

Public Members

spi_flash_host_inst_t ***host**
Pointer to hardware-specific "host_driver" structure. Must be initialized before used.

const *spi_flash_chip_t* ***chip_drv**
Pointer to chip-model-specific "adapter" structure. If NULL, will be detected during initialisation.

const *esp_flash_os_functions_t* ***os_func**
Pointer to os-specific hook structure. Call `esp_flash_init_os_functions()` to setup this field, after the host is properly initialized.

void ***os_func_data**
Pointer to argument for os-specific hooks. Left NULL and will be initialized with `os_func`.

esp_flash_io_mode_t **read_mode**
Configured SPI flash read mode. Set before `esp_flash_init` is called.

uint32_t **size**
Size of SPI flash in bytes. If 0, size will be detected during initialisation.

uint32_t **chip_id**
Detected chip id.

uint32_t **busy** : 1
This flag is used to verify chip's status.

uint32_t **reserved_flags** : 31
reserved.

Macros

SPI_FLASH_YIELD_REQ_YIELD

SPI_FLASH_YIELD_REQ_SUSPEND

SPI_FLASH_YIELD_STA_RESUME

Type Definitions

typedef struct *spi_flash_chip_t* **spi_flash_chip_t**
typedef struct *esp_flash_t* **esp_flash_t**

Header File

- hal/include/hal/spi_flash_types.h

Structures

struct spi_flash_trans_t

Definition of a common transaction. Also holds the return value.

Public Members

uint8_t **reserved**
Reserved, must be 0.

uint8_t **mosi_len**
Output data length, in bytes.

uint8_t **miso_len**
Input data length, in bytes.

uint8_t **address_bitlen**
Length of address in bits, set to 0 if command does not need an address.

uint32_t **address**
Address to perform operation on.

const uint8_t ***mosi_data**
Output data to salve.

uint8_t ***miso_data**
[out] Input data from slave, little endian

uint32_t **flags**
Flags for this transaction. Set to 0 for now.

uint16_t **command**
Command to send.

uint8_t **dummy_bitlen**
Basic dummy bits to use.

struct spi_flash_sus_cmd_conf

Configuration structure for the flash chip suspend feature.

Public Members

uint32_t **sus_mask**
SUS/SUS1/SUS2 bit in flash register.

uint32_t **cmd_rdsr** : 8
Read flash status register(2) command.

uint32_t **sus_cmd** : 8
Flash suspend command.

uint32_t **res_cmd** : 8
Flash resume command.

uint32_t **reserved** : 8
Reserved, set to 0.

struct spi_flash_host_inst_t
SPI Flash Host driver instance

Public Members

const struct *spi_flash_host_driver_s* ***driver**
Pointer to the implementation function table.

struct spi_flash_host_driver_s
Host driver configuration and context structure.

Public Members

esp_err_t (***dev_config**) (*spi_flash_host_inst_t* *host)
Configure the device-related register before transactions. This saves some time to re-configure those registers when we send continuously

esp_err_t (***common_command**) (*spi_flash_host_inst_t* *host, *spi_flash_trans_t* *t)
Send an user-defined spi transaction to the device.

esp_err_t (***read_id**) (*spi_flash_host_inst_t* *host, uint32_t *id)
Read flash ID.

void (***erase_chip**) (*spi_flash_host_inst_t* *host)
Erase whole flash chip.

void (***erase_sector**) (*spi_flash_host_inst_t* *host, uint32_t start_address)
Erase a specific sector by its start address.

void (***erase_block**) (*spi_flash_host_inst_t* *host, uint32_t start_address)
Erase a specific block by its start address.

esp_err_t (***read_status**) (*spi_flash_host_inst_t* *host, uint8_t *out_sr)
Read the status of the flash chip.

esp_err_t (***set_write_protect**) (*spi_flash_host_inst_t* *host, bool wp)
Disable write protection.

void (***program_page**) (*spi_flash_host_inst_t* *host, **const** void *buffer, uint32_t address, uint32_t length)
Program a page of the flash. Check `max_write_bytes` for the maximum allowed writing length.

bool (***supports_direct_write**) (*spi_flash_host_inst_t* *host, **const** void *p)
Check whether given buffer can be directly used to write

int (***write_data_slicer**) (*spi_flash_host_inst_t* *host, uint32_t address, uint32_t len, uint32_t *align_addr, uint32_t page_size)
Slicer for write data. The `program_page` should be called iteratively with the return value of this function.

Return Length that can be actually written in one `program_page` call
Parameters
- `address`: Beginning flash address to write
- `len`: Length request to write
- `align_addr`: Output of the aligned address to write to
- `page_size`: Physical page size of the flash chip

esp_err_t (***read**) (*spi_flash_host_inst_t* *host, void *buffer, uint32_t address, uint32_t read_len)
Read data from the flash. Check `max_read_bytes` for the maximum allowed reading length.

bool (***supports_direct_read**) (*spi_flash_host_inst_t* *host, **const** void *p)
Check whether given buffer can be directly used to read

int (***read_data_slicer**) (*spi_flash_host_inst_t* *host, uint32_t address, uint32_t len, uint32_t *align_addr, uint32_t page_size)

Slicer for read data. The `read` should be called iteratively with the return value of this function.

Return Length that can be actually read in one `read` call

Parameters

- `address`: Beginning flash address to read
- `len`: Length request to read
- `align_addr`: Output of the aligned address to read
- `page_size`: Physical page size of the flash chip

uint32_t (***host_status**) (*spi_flash_host_inst_t* *host)

Check the host status, 0:busy, 1:idle, 2:suspended.

esp_err_t (***configure_host_io_mode**) (*spi_flash_host_inst_t* *host, uint32_t command, uint32_t addr_bitlen, int dummy_bitlen_base, *esp_flash_io_mode_t* io_mode)

Configure the host to work at different read mode. Responsible to compensate the timing and set IO mode.

void (***poll_cmd_done**) (*spi_flash_host_inst_t* *host)

Internal use, poll the HW until the last operation is done.

esp_err_t (***flush_cache**) (*spi_flash_host_inst_t* *host, uint32_t addr, uint32_t size)

For some host (SPI1), they are shared with a cache. When the data is modified, the cache needs to be flushed. Left NULL if not supported.

void (***check_suspend**) (*spi_flash_host_inst_t* *host)

Suspend check erase/program operation, reserved for ESP32-C3 and ESP32-S3 spi flash ROM IMPL.

void (***resume**) (*spi_flash_host_inst_t* *host)

Resume flash from suspend manually

void (***suspend**) (*spi_flash_host_inst_t* *host)

Set flash in suspend status manually

esp_err_t (***sus_setup**) (*spi_flash_host_inst_t* *host, **const** *spi_flash_sus_cmd_conf* *sus_conf)

Suspend feature setup for setting cmd and status register mask.

Macros

SPI_FLASH_TRANS_FLAG_CMD16

Send command of 16 bits.

SPI_FLASH_TRANS_FLAG_IGNORE_BASEIO

Not applying the basic io mode configuration for this transaction.

SPI_FLASH_TRANS_FLAG_BYTE_SWAP

Used for DTR mode, to swap the bytes of a pair of rising/falling edge.

ESP_FLASH_SPEED_MIN

Lowest speed supported by the driver, currently 5 MHz.

SPI_FLASH_CONFIG_CONF_BITS

OR the io_mode with this mask, to enable the dummy output feature or replace the first several dummy bits into address to meet the requirements of conf bits. (Used in DIO/QIO/OIO mode)

SPI_FLASH_READ_MODE_MIN

Slowest io mode supported by ESP32, currently SlowRd.

Type Definitions

typedef struct *spi_flash_host_driver_s* **spi_flash_host_driver_t**

Enumerations

enum esp_flash_speed_t

SPI flash clock speed values, always refer to them by the enum rather than the actual value (more speed may be appended into the list).

A strategy to select the maximum allowed speed is to enumerate from the `ESP_FLSH_SPEED_MAX-1` or highest frequency supported by your flash, and decrease the speed until the probing success.

Values:

ESP_FLASH_5MHZ = 0
The flash runs under 5MHz.

ESP_FLASH_10MHZ
The flash runs under 10MHz.

ESP_FLASH_20MHZ
The flash runs under 20MHz.

ESP_FLASH_26MHZ
The flash runs under 26MHz.

ESP_FLASH_40MHZ
The flash runs under 40MHz.

ESP_FLASH_80MHZ
The flash runs under 80MHz.

ESP_FLASH_SPEED_MAX
The maximum frequency supported by the host is `ESP_FLASH_SPEED_MAX-1`.

enum esp_flash_io_mode_t

Mode used for reading from SPI flash.

Values:

SPI_FLASH_SLOWRD = 0
Data read using single I/O, some limits on speed.

SPI_FLASH_FASTRD
Data read using single I/O, no limit on speed.

SPI_FLASH_DOUT
Data read using dual I/O.

SPI_FLASH_DIO
Both address & data transferred using dual I/O.

SPI_FLASH_QOUT
Data read using quad I/O.

SPI_FLASH_QIO
Both address & data transferred using quad I/O.

SPI_FLASH_READ_MODE_MAX
The fastest io mode supported by the host is `ESP_FLASH_READ_MODE_MAX-1`.

分区表 API 参考

Header File

- spi_flash/include/esp_partition.h

Functions

esp_partition_iterator_t **esp_partition_find**(*esp_partition_type_t type*, *esp_partition_subtype_t subtype*, **const** char **label*)

Find partition based on one or more parameters.

Return iterator which can be used to enumerate all the partitions found, or NULL if no partitions were found. Iterator obtained through this function has to be released using esp_partition_iterator_release when not used any more.

Parameters

- `type`: Partition type, one of esp_partition_type_t values or an 8-bit unsigned integer
- `subtype`: Partition subtype, one of esp_partition_subtype_t values or an 8-bit unsigned integer. To find all partitions of given type, use ESP_PARTITION_SUBTYPE_ANY.
- `label`: (optional) Partition label. Set this value if looking for partition with a specific name. Pass NULL otherwise.

const *esp_partition_t* ***esp_partition_find_first**(*esp_partition_type_t* *type*, *esp_partition_subtype_t* *subtype*, **const** char **label*)

Find first partition based on one or more parameters.

Return pointer to *esp_partition_t* structure, or NULL if no partition is found. This pointer is valid for the lifetime of the application.

Parameters

- `type`: Partition type, one of esp_partition_type_t values or an 8-bit unsigned integer
- `subtype`: Partition subtype, one of esp_partition_subtype_t values or an 8-bit unsigned integer To find all partitions of given type, use ESP_PARTITION_SUBTYPE_ANY.
- `label`: (optional) Partition label. Set this value if looking for partition with a specific name. Pass NULL otherwise.

const *esp_partition_t* ***esp_partition_get**(*esp_partition_iterator_t iterator*)

Get *esp_partition_t* structure for given partition.

Return pointer to *esp_partition_t* structure. This pointer is valid for the lifetime of the application.

Parameters

- `iterator`: Iterator obtained using esp_partition_find. Must be non-NULL.

esp_partition_iterator_t **esp_partition_next**(*esp_partition_iterator_t iterator*)

Move partition iterator to the next partition found.

Any copies of the iterator will be invalid after this call.

Return NULL if no partition was found, valid esp_partition_iterator_t otherwise.

Parameters

- `iterator`: Iterator obtained using esp_partition_find. Must be non-NULL.

void **esp_partition_iterator_release**(*esp_partition_iterator_t iterator*)

Release partition iterator.

Parameters

- `iterator`: Iterator obtained using esp_partition_find. Must be non-NULL.

const *esp_partition_t* ***esp_partition_verify**(**const** *esp_partition_t* **partition*)

Verify partition data.

Given a pointer to partition data, verify this partition exists in the partition table (all fields match.)

This function is also useful to take partition data which may be in a RAM buffer and convert it to a pointer to the permanent partition data stored in flash.

Pointers returned from this function can be compared directly to the address of any pointer returned from *esp_partition_get()*, as a test for equality.

Return

- If partition not found, returns NULL.
- If found, returns a pointer to the *esp_partition_t* structure in flash. This pointer is always valid for the lifetime of the application.

Parameters

- `partition`: Pointer to partition data to verify. Must be non-NULL. All fields of this structure must match the partition table entry in flash for this function to return a successful match.

esp_err_t **esp_partition_read**(**const** *esp_partition_t* **partition*, size_t *src_offset*, void **dst*, size_t *size*)

Read data from the partition.

Partitions marked with an encryption flag will automatically be be read and decrypted via a cache mapping.

Return ESP_OK, if data was read successfully; ESP_ERR_INVALID_ARG, if src_offset exceeds partition size; ESP_ERR_INVALID_SIZE, if read would go out of bounds of the partition; or one of error codes from lower-level flash driver.

Parameters

- `partition`: Pointer to partition structure obtained using esp_partition_find_first or esp_partition_get. Must be non-NULL.
- `dst`: Pointer to the buffer where data should be stored. Pointer must be non-NULL and buffer must be at least 'size' bytes long.
- `src_offset`: Address of the data to be read, relative to the beginning of the partition.
- `size`: Size of data to be read, in bytes.

esp_err_t **esp_partition_write**(**const** *esp_partition_t* **partition*, size_t *dst_offset*, **const** void **src*, size_t *size*)

Write data to the partition.

Before writing data to flash, corresponding region of flash needs to be erased. This can be done using esp_partition_erase_range function.

Partitions marked with an encryption flag will automatically be written via the spi_flash_write_encrypted() function. If writing to an encrypted partition, all write offsets and lengths must be multiples of 16 bytes. See the spi_flash_write_encrypted() function for more details. Unencrypted partitions do not have this restriction.

Note Prior to writing to flash memory, make sure it has been erased with esp_partition_erase_range call.

Return ESP_OK, if data was written successfully; ESP_ERR_INVALID_ARG, if dst_offset exceeds partition size; ESP_ERR_INVALID_SIZE, if write would go out of bounds of the partition; or one of error codes from lower-level flash driver.

Parameters

- `partition`: Pointer to partition structure obtained using esp_partition_find_first or esp_partition_get. Must be non-NULL.
- `dst_offset`: Address where the data should be written, relative to the beginning of the partition.
- `src`: Pointer to the source buffer. Pointer must be non-NULL and buffer must be at least 'size' bytes long.
- `size`: Size of data to be written, in bytes.

esp_err_t **esp_partition_read_raw**(**const** *esp_partition_t* **partition*, size_t *src_offset*, void **dst*, size_t *size*)

Read data from the partition without any transformation/decryption.

Note This function is essentially the same as *esp_partition_read()* above. It just never decrypts data but returns it as is.

Return ESP_OK, if data was read successfully; ESP_ERR_INVALID_ARG, if src_offset exceeds partition size; ESP_ERR_INVALID_SIZE, if read would go out of bounds of the partition; or one of error codes from lower-level flash driver.

Parameters

- `partition`: Pointer to partition structure obtained using esp_partition_find_first or esp_partition_get. Must be non-NULL.
- `dst`: Pointer to the buffer where data should be stored. Pointer must be non-NULL and buffer must be at least 'size' bytes long.
- `src_offset`: Address of the data to be read, relative to the beginning of the partition.
- `size`: Size of data to be read, in bytes.

esp_err_t **esp_partition_write_raw**(**const** *esp_partition_t* **partition*, size_t *dst_offset*, **const** void **src*, size_t *size*)

Write data to the partition without any transformation/encryption.

Before writing data to flash, corresponding region of flash needs to be erased. This can be done using esp_partition_erase_range function.

Note This function is essentially the same as *esp_partition_write()* above. It just never encrypts data but writes it as is.

Note Prior to writing to flash memory, make sure it has been erased with esp_partition_erase_range call.

Return ESP_OK, if data was written successfully; ESP_ERR_INVALID_ARG, if dst_offset exceeds partition size; ESP_ERR_INVALID_SIZE, if write would go out of bounds of the partition; or one of the error codes from lower-level flash driver.

Parameters

- `partition`: Pointer to partition structure obtained using esp_partition_find_first or esp_partition_get. Must be non-NULL.
- `dst_offset`: Address where the data should be written, relative to the beginning of the partition.
- `src`: Pointer to the source buffer. Pointer must be non-NULL and buffer must be at least 'size' bytes long.
- `size`: Size of data to be written, in bytes.

esp_err_t **esp_partition_erase_range**(**const** *esp_partition_t* **partition*, size_t *offset*, size_t *size*)

Erase part of the partition.

Return ESP_OK, if the range was erased successfully; ESP_ERR_INVALID_ARG, if iterator or dst are NULL; ESP_ERR_INVALID_SIZE, if erase would go out of bounds of the partition; or one of error codes from lower-level flash driver.

Parameters

- `partition`: Pointer to partition structure obtained using esp_partition_find_first or esp_partition_get. Must be non-NULL.
- `offset`: Offset from the beginning of partition where erase operation should start. Must be aligned to 4 kilobytes.
- `size`: Size of the range which should be erased, in bytes. Must be divisible by 4 kilobytes.

esp_err_t **esp_partition_mmap**(**const** *esp_partition_t* **partition*, size_t *offset*, size_t *size*, spi_flash_mmap_memory_t *memory*, **const** void ***out_ptr*, spi_flash_mmap_handle_t **out_handle*)

Configure MMU to map partition into data memory.

Unlike spi_flash_mmap function, which requires a 64kB aligned base address, this function doesn't impose such a requirement. If offset results in a flash address which is not aligned to 64kB boundary, address will be rounded to the lower 64kB boundary, so that mapped region includes requested range. Pointer returned via out_ptr argument will be adjusted to point to the requested offset (not necessarily to the beginning of mmap-ed region).

To release mapped memory, pass handle returned via out_handle argument to spi_flash_munmap function.

Return ESP_OK, if successful

Parameters

- `partition`: Pointer to partition structure obtained using esp_partition_find_first or esp_partition_get. Must be non-NULL.
- `offset`: Offset from the beginning of partition where mapping should start.
- `size`: Size of the area to be mapped.
- `memory`: Memory space where the region should be mapped
- `out_ptr`: Output, pointer to the mapped memory region
- `out_handle`: Output, handle which should be used for spi_flash_munmap call

esp_err_t **esp_partition_get_sha256**(**const** *esp_partition_t* **partition*, uint8_t **sha_256*)

Get SHA-256 digest for required partition.

For apps with SHA-256 appended to the app image, the result is the appended SHA-256 value for the app image content. The hash is verified before returning, if app content is invalid then the function returns ESP_ERR_IMAGE_INVALID. For apps without SHA-256 appended to the image, the result is the SHA-256 of all bytes in the app image. For other partition types, the result is the SHA-256 of the entire partition.

Return

- ESP_OK: In case of successful operation.
- ESP_ERR_INVALID_ARG: The size was 0 or the sha_256 was NULL.
- ESP_ERR_NO_MEM: Cannot allocate memory for sha256 operation.

- ESP_ERR_IMAGE_INVALID: App partition doesn't contain a valid app image.
- ESP_FAIL: An allocation error occurred.

Parameters

- `[in] partition`: Pointer to info for partition containing app or data. (fields: address, size and type, are required to be filled).
- `[out] sha_256`: Returned SHA-256 digest for a given partition.

bool **esp_partition_check_identity**(**const** *esp_partition_t* *partition_1, **const** *esp_partition_t* *partition_2)

Check for the identity of two partitions by SHA-256 digest.

Return

- True: In case of the two firmware is equal.
- False: Otherwise

Parameters

- `[in] partition_1`: Pointer to info for partition 1 containing app or data. (fields: address, size and type, are required to be filled).
- `[in] partition_2`: Pointer to info for partition 2 containing app or data. (fields: address, size and type, are required to be filled).

esp_err_t **esp_partition_register_external**(*esp_flash_t* *flash_chip, size_t offset, size_t size, **const** char *label, *esp_partition_type_t* type, *esp_partition_subtype_t* subtype, **const** *esp_partition_t* **out_partition)

Register a partition on an external flash chip.

This API allows designating certain areas of external flash chips (identified by the *esp_flash_t* structure) as partitions. This allows using them with components which access SPI flash through the esp_partition API.

Return

- ESP_OK on success
- ESP_ERR_NOT_SUPPORTED if CONFIG_CONFIG_SPI_FLASH_USE_LEGACY_IMPL is enabled
- ESP_ERR_NO_MEM if memory allocation has failed
- ESP_ERR_INVALID_ARG if the new partition overlaps another partition on the same flash chip
- ESP_ERR_INVALID_SIZE if the partition doesn't fit into the flash chip size

Parameters

- `flash_chip`: Pointer to the structure identifying the flash chip
- `offset`: Address in bytes, where the partition starts
- `size`: Size of the partition in bytes
- `label`: Partition name
- `type`: One of the partition types (ESP_PARTITION_TYPE_*), or an integer. Note that applications can not be booted from external flash chips, so using ESP_PARTITION_TYPE_APP is not supported.
- `subtype`: One of the partition subtypes (ESP_PARTITION_SUBTYPE_*), or an integer.
- `[out] out_partition`: Output, if non-NULL, receives the pointer to the resulting *esp_partition_t* structure

esp_err_t **esp_partition_deregister_external**(**const** *esp_partition_t* *partition)

Deregister the partition previously registered using esp_partition_register_external.

Return

- ESP_OK on success
- ESP_ERR_NOT_FOUND if the partition pointer is not found
- ESP_ERR_INVALID_ARG if the partition comes from the partition table
- ESP_ERR_INVALID_ARG if the partition was not registered using esp_partition_register_external function.

Parameters

- `partition`: pointer to the partition structure obtained from esp_partition_register_external,

Structures

struct esp_partition_t

partition information structure

This is not the format in flash, that format is esp_partition_info_t.

However, this is the format used by this API.

Public Members

esp_flash_t ***flash_chip**

SPI flash chip on which the partition resides

esp_partition_type_t **type**

partition type (app/data)

esp_partition_subtype_t **subtype**

partition subtype

uint32_t **address**

starting address of the partition in flash

uint32_t **size**

size of the partition, in bytes

char **label**[17]

partition label, zero-terminated ASCII string

bool **encrypted**

flag is set to true if partition is encrypted

Macros

ESP_PARTITION_SUBTYPE_OTA(i)

Convenience macro to get esp_partition_subtype_t value for the i-th OTA partition.

Type Definitions

typedef struct esp_partition_iterator_opaque_ ***esp_partition_iterator_t**

Opaque partition iterator type.

Enumerations

enum esp_partition_type_t

Partition type.

Note Partition types with integer value 0x00-0x3F are reserved for partition types defined by ESP-IDF. Any other integer value 0x40-0xFE can be used by individual applications, without restriction.

Values:

ESP_PARTITION_TYPE_APP = 0x00

Application partition type.

ESP_PARTITION_TYPE_DATA = 0x01

Data partition type.

enum esp_partition_subtype_t

Partition subtype.

Application-defined partition types (0x40-0xFE) can set any numeric subtype value.

Note These ESP-IDF-defined partition subtypes apply to partitions of type ESP_PARTITION_TYPE_APP and ESP_PARTITION_TYPE_DATA.

Values:

ESP_PARTITION_SUBTYPE_APP_FACTORY = 0x00
Factory application partition.

ESP_PARTITION_SUBTYPE_APP_OTA_MIN = 0x10
Base for OTA partition subtypes.

ESP_PARTITION_SUBTYPE_APP_OTA_0 = *ESP_PARTITION_SUBTYPE_APP_OTA_MIN* + 0
OTA partition 0.

ESP_PARTITION_SUBTYPE_APP_OTA_1 = *ESP_PARTITION_SUBTYPE_APP_OTA_MIN* + 1
OTA partition 1.

ESP_PARTITION_SUBTYPE_APP_OTA_2 = *ESP_PARTITION_SUBTYPE_APP_OTA_MIN* + 2
OTA partition 2.

ESP_PARTITION_SUBTYPE_APP_OTA_3 = *ESP_PARTITION_SUBTYPE_APP_OTA_MIN* + 3
OTA partition 3.

ESP_PARTITION_SUBTYPE_APP_OTA_4 = *ESP_PARTITION_SUBTYPE_APP_OTA_MIN* + 4
OTA partition 4.

ESP_PARTITION_SUBTYPE_APP_OTA_5 = *ESP_PARTITION_SUBTYPE_APP_OTA_MIN* + 5
OTA partition 5.

ESP_PARTITION_SUBTYPE_APP_OTA_6 = *ESP_PARTITION_SUBTYPE_APP_OTA_MIN* + 6
OTA partition 6.

ESP_PARTITION_SUBTYPE_APP_OTA_7 = *ESP_PARTITION_SUBTYPE_APP_OTA_MIN* + 7
OTA partition 7.

ESP_PARTITION_SUBTYPE_APP_OTA_8 = *ESP_PARTITION_SUBTYPE_APP_OTA_MIN* + 8
OTA partition 8.

ESP_PARTITION_SUBTYPE_APP_OTA_9 = *ESP_PARTITION_SUBTYPE_APP_OTA_MIN* + 9
OTA partition 9.

ESP_PARTITION_SUBTYPE_APP_OTA_10 = *ESP_PARTITION_SUBTYPE_APP_OTA_MIN* + 10
OTA partition 10.

ESP_PARTITION_SUBTYPE_APP_OTA_11 = *ESP_PARTITION_SUBTYPE_APP_OTA_MIN* + 11
OTA partition 11.

ESP_PARTITION_SUBTYPE_APP_OTA_12 = *ESP_PARTITION_SUBTYPE_APP_OTA_MIN* + 12
OTA partition 12.

ESP_PARTITION_SUBTYPE_APP_OTA_13 = *ESP_PARTITION_SUBTYPE_APP_OTA_MIN* + 13
OTA partition 13.

ESP_PARTITION_SUBTYPE_APP_OTA_14 = *ESP_PARTITION_SUBTYPE_APP_OTA_MIN* + 14
OTA partition 14.

ESP_PARTITION_SUBTYPE_APP_OTA_15 = *ESP_PARTITION_SUBTYPE_APP_OTA_MIN* + 15
OTA partition 15.

ESP_PARTITION_SUBTYPE_APP_OTA_MAX = *ESP_PARTITION_SUBTYPE_APP_OTA_MIN* + 16
Max subtype of OTA partition.

ESP_PARTITION_SUBTYPE_APP_TEST = 0x20
Test application partition.

ESP_PARTITION_SUBTYPE_DATA_OTA = 0x00
OTA selection partition.

ESP_PARTITION_SUBTYPE_DATA_PHY = 0x01
PHY init data partition.

ESP_PARTITION_SUBTYPE_DATA_NVS = 0x02
NVS partition.

ESP_PARTITION_SUBTYPE_DATA_COREDUMP = 0x03
COREDUMP partition.

ESP_PARTITION_SUBTYPE_DATA_NVS_KEYS = 0x04
Partition for NVS keys.

ESP_PARTITION_SUBTYPE_DATA_EFUSE_EM = 0x05
Partition for emulate eFuse bits.

ESP_PARTITION_SUBTYPE_DATA_UNDEFINED = 0x06
Undefined (or unspecified) data partition.

ESP_PARTITION_SUBTYPE_DATA_ESPHTTPD = 0x80
ESPHTTPD partition.

ESP_PARTITION_SUBTYPE_DATA_FAT = 0x81
FAT partition.

ESP_PARTITION_SUBTYPE_DATA_SPIFFS = 0x82
SPIFFS partition.

ESP_PARTITION_SUBTYPE_ANY = 0xff
Used to search for partitions with any subtype.

Flash 加密 API 参考

Header File

- bootloader_support/include/esp_flash_encrypt.h

Functions

static bool **esp_flash_encryption_enabled**(void)
Is flash encryption currently enabled in hardware?

Flash encryption is enabled if the FLASH_CRYPT_CNT efuse has an odd number of bits set.

Return true if flash encryption is enabled.

esp_err_t **esp_flash_encrypt_check_and_update**(void)

esp_err_t **esp_flash_encrypt_region**(uint32_t *src_addr*, size_t *data_length*)
Encrypt-in-place a block of flash sectors.

Note This function resets RTC_WDT between operations with sectors.

Return ESP_OK if all operations succeeded, ESP_ERR_FLASH_OP_FAIL if SPI flash fails, ESP_ERR_FLASH_OP_TIMEOUT if flash times out.

Parameters

- `src_addr`: Source offset in flash. Should be multiple of 4096 bytes.
- `data_length`: Length of data to encrypt in bytes. Will be rounded up to next multiple of 4096 bytes.

void **esp_flash_write_protect_crypt_cnt**(void)
Write protect FLASH_CRYPT_CNT.

Intended to be called as a part of boot process if flash encryption is enabled but secure boot is not used. This should protect against serial re-flashing of an unauthorised code in absence of secure boot.

Note On ESP32 V3 only, write protecting FLASH_CRYPT_CNT will also prevent disabling UART Download Mode. If both are wanted, call esp_efuse_disable_rom_download_mode() before calling this function.

esp_flash_enc_mode_t **esp_get_flash_encryption_mode**(void)
Return the flash encryption mode.

The API is called during boot process but can also be called by application to check the current flash encryption mode of ESP32

Return

void **esp_flash_encryption_init_checks**(void)

Check the flash encryption mode during startup.

Verifies the flash encryption config during startup:

Note This function is called automatically during app startup, it doesn't need to be called from the app.

- Correct any insecure flash encryption settings if hardware Secure Boot is enabled.
- Log warnings if the efuse config doesn't match the project config in any way

Enumerations

enum esp_flash_enc_mode_t

Values:

ESP_FLASH_ENC_MODE_DISABLED

ESP_FLASH_ENC_MODE_DEVELOPMENT

ESP_FLASH_ENC_MODE_RELEASE

2.6.2 SD/SDIO/MMC 驱动程序

概述

SD/SDIO/MMC 驱动是一种基于 SDMMC 和 SD SPI 主机驱动的协议级驱动程序，目前已支持 SD 存储器、SDIO 卡和 eMMC 芯片。

SDMMC 主机驱动和 SD SPI 主机驱动（driver/include/driver/sdmmc_host.h 和 driver/include/driver/sdspi_host.h）为以下功能提供 API：

- 发送命令至从设备
- 接收和发送数据
- 处理总线错误

初始化函数及配置函数：

- 如需初始化和配置 SDMMC 主机，请参阅*SDMMC 主机 API*
- 如需初始化和配置 SD SPI 主机，请参阅*SD SPI 主机 API*

本文档中所述的 SDMMC 协议层仅处理 SD 协议相关事项，例如卡初始化和数据传输命令。

协议层通过`sdmmc_host_t`结构体和主机协同工作，该结构体包含指向主机各类函数的指针。

应用示例

ESP-IDF storage/sd_card 目录下提供了 SDMMC 驱动与 FatFs 库组合使用的示例，演示了先初始化卡，然后使用 POSIX 和 C 库 API 向卡读写数据。请参考示例目录下 README.md 文件，查看更多详细信息。

复合卡（存储 + IO） 该驱动程序不支持 SD 复合卡，复合卡会被视为 IO 卡。

线程安全 多数应用程序仅需在一个任务中使用协议层。因此，协议层在`sdmmc_card_t`结构体或在访问 SDMMC 或 SD SPI 主机驱动程序时不使用任何类型的锁。这种锁通常在较高层级实现，例如文件系统驱动程序。

协议层 API

协议层具备 *sdmmc_host_t* 结构体，此结构体描述了 SD/MMC 主机驱动，列出了其功能，并提供指向驱动程序函数的指针。协议层将卡信息储存于 *sdmmc_card_t* 结构体中。向 SD/MMC 主机发送命令时，协议层使用 *sdmmc_command_t* 结构体来描述命令、参数、预期返回值和需传输的数据（如有）。

用于 SD 存储卡的 API

1. 初始化主机，请调用主机驱动函数，例如 *sdmmc_host_init()* 和 *sdmmc_host_init_slot()*；
2. 初始化卡，请调用 *sdmmc_card_init()*，并将参数 `host`（即主机驱动信息）和参数 `card`（指向 *sdmmc_card_t* 结构体的指针）传递给此函数。函数运行结束后，将会向 *sdmmc_card_t* 结构体填充该卡的信息；
3. 读取或写入卡的扇区，请分别调用 *sdmmc_read_sectors()* 和 *sdmmc_write_sectors()*，并将参数 `card`（指向卡信息结构的指针）传递给函数；
4. 如果不再使用该卡，请调用主机驱动函数，例如 *sdmmc_host_deinit()*，以禁用主机外设，并释放驱动程序分配的资源。

用于 eMMC 芯片的 API 从协议层的角度而言，eMMC 存储芯片与 SD 存储卡相同。尽管 eMMC 是芯片，不具备卡的外形，但由于协议相似 (*sdmmc_card_t*, *sdmmc_card_init*)，用于 SD 卡的一些概念同样适用于 eMMC 芯片。注意，eMMC 芯片不可通过 SPI 使用，因此它与 SD API 主机驱动不兼容。

如需初始化 eMMC 内存并执行读/写操作，请参照上一章节 SD 卡操作步骤。

用于 SDIO 卡的 API SDIO 卡初始化和检测过程与 SD 存储卡相同，唯一的区别是 SDIO 模式下数据传输命令不同。

在卡初始化和卡检测（通过运行 *sdmmc_card_init()*）期间，驱动仅配置 IO 卡如下寄存器：

1. I/O 中止 (0x06) 寄存器：在该寄存器中设置 RES 位可重置卡的 IO 部分；
2. 总线接口控制 (0x07) 寄存器：如果主机和插槽配置中启用 4 线模式，则驱动程序会尝试在该寄存器中设置总线宽度字段。如果字段设置成功，则从机支持 4 线模式，主机也切换至 4 线模式；
3. 高速（0x13）寄存器：如果主机配置中启用高速模式，则该寄存器的 SHS 位会被设置。

注意，驱动程序不会在 (1) I/O 使能寄存器和 Int 使能寄存器，及 (2) I/O 块大小中，设置任何位。应用程序可通过调用 *sdmmc_io_write_byte()* 来设置相关位。

如需卡配置或传输数据，请根据您的具体情况选择下表中的函数：

操作	函数读取	函数写入
使用 IO_RW_DIRECT (CMD52) 读写单个字节。	*sdmmc_io_read_byte()*	*sdmmc_io_write_byte()*
使用 IO_RW_EXTENDED (CMD53) 的字节模式读写多个字节。	*sdmmc_io_read_bytes()*	*sdmmc_io_write_bytes()*
块模式下，使用 IO_RW_EXTENDED (CMD53) 读写数据块。	*sdmmc_io_read_blocks()*	*sdmmc_io_write_blocks()*

使用 *sdmmc_io_enable_int()* 函数，应用程序可启用 SDIO 中断。在单线模式下使用 SDIO 时，还需要连接 D1 线来启用 SDIO 中断。

如果您需要应用程序保持等待直至发生 SDIO 中断，请使用 *sdmmc_io_wait_int()* 函数。

如果您需要与 ESP32 的 SDIO 从设备通信，请使用 ESSL 组件（ESP 串行从设备链接）。请参阅 *ESP Serial Slave Link* 和 peripherals/sdio/host。

API 参考

Header File

- sdmmc/include/sdmmc_cmd.h

Functions

esp_err_t **sdmmc_card_init**(**const** *sdmmc_host_t* **host*, *sdmmc_card_t* **out_card*)

Probe and initialize SD/MMC card using given host

Note Only SD cards (SDSC and SDHC/SDXC) are supported now. Support for MMC/eMMC cards will be added later.

Return

- ESP_OK on success
- One of the error codes from SDMMC host controller

Parameters

- `host`: pointer to structure defining host controller
- `out_card`: pointer to structure which will receive information about the card when the function completes

void **sdmmc_card_print_info**(FILE **stream*, **const** *sdmmc_card_t* **card*)

Print information about the card to a stream.

Parameters

- `stream`: stream obtained using fopen or fdopen
- `card`: card information structure initialized using sdmmc_card_init

esp_err_t **sdmmc_write_sectors**(*sdmmc_card_t* **card*, **const** void **src*, size_t *start_sector*, size_t *sector_count*)

Write given number of sectors to SD/MMC card

Return

- ESP_OK on success
- One of the error codes from SDMMC host controller

Parameters

- `card`: pointer to card information structure previously initialized using sdmmc_card_init
- `src`: pointer to data buffer to read data from; data size must be equal to sector_count * card->csd.sector_size
- `start_sector`: sector where to start writing
- `sector_count`: number of sectors to write

esp_err_t **sdmmc_read_sectors**(*sdmmc_card_t* **card*, void **dst*, size_t *start_sector*, size_t *sector_count*)

Read given number of sectors from the SD/MMC card

Return

- ESP_OK on success
- One of the error codes from SDMMC host controller

Parameters

- `card`: pointer to card information structure previously initialized using sdmmc_card_init
- `dst`: pointer to data buffer to write into; buffer size must be at least sector_count * card->csd.sector_size
- `start_sector`: sector where to start reading
- `sector_count`: number of sectors to read

esp_err_t **sdmmc_io_read_byte**(*sdmmc_card_t* **card*, uint32_t *function*, uint32_t *reg*, uint8_t **out_byte*)

Read one byte from an SDIO card using IO_RW_DIRECT (CMD52)

Return

- ESP_OK on success
- One of the error codes from SDMMC host controller

Parameters

- `card`: pointer to card information structure previously initialized using sdmmc_card_init
- `function`: IO function number
- `reg`: byte address within IO function
- `[out] out_byte`: output, receives the value read from the card

esp_err_t **sdmmc_io_write_byte**(*sdmmc_card_t* **card*, uint32_t *function*, uint32_t *reg*, uint8_t *in_byte*, uint8_t **out_byte*)

Write one byte to an SDIO card using IO_RW_DIRECT (CMD52)

Return

- ESP_OK on success
- One of the error codes from SDMMC host controller

Parameters

- `card`: pointer to card information structure previously initialized using sdmmc_card_init
- `function`: IO function number
- `reg`: byte address within IO function
- `in_byte`: value to be written
- `[out] out_byte`: if not NULL, receives new byte value read from the card (read-after-write).

esp_err_t **sdmmc_io_read_bytes**(*sdmmc_card_t* **card*, uint32_t *function*, uint32_t *addr*, void **dst*, size_t *size*)

Read multiple bytes from an SDIO card using IO_RW_EXTENDED (CMD53)

This function performs read operation using CMD53 in byte mode. For block mode, see sdmmc_io_read_blocks.

Return

- ESP_OK on success
- ESP_ERR_INVALID_SIZE if size exceeds 512 bytes
- One of the error codes from SDMMC host controller

Parameters

- `card`: pointer to card information structure previously initialized using sdmmc_card_init
- `function`: IO function number
- `addr`: byte address within IO function where reading starts
- `dst`: buffer which receives the data read from card
- `size`: number of bytes to read

esp_err_t **sdmmc_io_write_bytes**(*sdmmc_card_t* **card*, uint32_t *function*, uint32_t *addr*, **const** void **src*, size_t *size*)

Write multiple bytes to an SDIO card using IO_RW_EXTENDED (CMD53)

This function performs write operation using CMD53 in byte mode. For block mode, see sdmmc_io_write_blocks.

Return

- ESP_OK on success
- ESP_ERR_INVALID_SIZE if size exceeds 512 bytes
- One of the error codes from SDMMC host controller

Parameters

- `card`: pointer to card information structure previously initialized using sdmmc_card_init
- `function`: IO function number
- `addr`: byte address within IO function where writing starts
- `src`: data to be written
- `size`: number of bytes to write

esp_err_t **sdmmc_io_read_blocks**(*sdmmc_card_t* **card*, uint32_t *function*, uint32_t *addr*, void **dst*, size_t *size*)

Read blocks of data from an SDIO card using IO_RW_EXTENDED (CMD53)

This function performs read operation using CMD53 in block mode. For byte mode, see sdmmc_io_read_bytes.

Return

- ESP_OK on success
- ESP_ERR_INVALID_SIZE if size is not divisible by 512 bytes
- One of the error codes from SDMMC host controller

Parameters

- `card`: pointer to card information structure previously initialized using sdmmc_card_init
- `function`: IO function number
- `addr`: byte address within IO function where writing starts
- `dst`: buffer which receives the data read from card

- `size`: number of bytes to read, must be divisible by the card block size.

esp_err_t **sdmmc_io_write_blocks**(*sdmmc_card_t* **card*, uint32_t *function*, uint32_t *addr*, **const** void **src*, size_t *size*)

Write blocks of data to an SDIO card using IO_RW_EXTENDED (CMD53)

This function performs write operation using CMD53 in block mode. For byte mode, see sdmmc_io_write_bytes.

Return

- ESP_OK on success
- ESP_ERR_INVALID_SIZE if size is not divisible by 512 bytes
- One of the error codes from SDMMC host controller

Parameters

- `card`: pointer to card information structure previously initialized using sdmmc_card_init
- `function`: IO function number
- `addr`: byte address within IO function where writing starts
- `src`: data to be written
- `size`: number of bytes to read, must be divisible by the card block size.

esp_err_t **sdmmc_io_enable_int**(*sdmmc_card_t* **card*)

Enable SDIO interrupt in the SDMMC host

Return

- ESP_OK on success
- ESP_ERR_NOT_SUPPORTED if the host controller does not support IO interrupts

Parameters

- `card`: pointer to card information structure previously initialized using sdmmc_card_init

esp_err_t **sdmmc_io_wait_int**(*sdmmc_card_t* **card*, TickType_t *timeout_ticks*)

Block until an SDIO interrupt is received

Slave uses D1 line to signal interrupt condition to the host. This function can be used to wait for the interrupt.

Return

- ESP_OK if the interrupt is received
- ESP_ERR_NOT_SUPPORTED if the host controller does not support IO interrupts
- ESP_ERR_TIMEOUT if the interrupt does not happen in timeout_ticks

Parameters

- `card`: pointer to card information structure previously initialized using sdmmc_card_init
- `timeout_ticks`: time to wait for the interrupt, in RTOS ticks

esp_err_t **sdmmc_io_get_cis_data**(*sdmmc_card_t* **card*, uint8_t **out_buffer*, size_t *buffer_size*, size_t **inout_cis_size*)

Get the data of CIS region of a SDIO card.

You may provide a buffer not sufficient to store all the CIS data. In this case, this functions store as much data into your buffer as possible. Also, this function will try to get and return the size required for you.

Return

- ESP_OK: on success
- ESP_ERR_INVALID_RESPONSE: if the card does not (correctly) support CIS.
- ESP_ERR_INVALID_SIZE: CIS_CODE_END found, but buffer_size is less than required size, which is stored in the inout_cis_size then.
- ESP_ERR_NOT_FOUND: if the CIS_CODE_END not found. Increase input value of inout_cis_size or set it to 0, if you still want to search for the end; output value of inout_cis_size is invalid in this case.
- and other error code return from sdmmc_io_read_bytes

Parameters

- `card`: pointer to card information structure previously initialized using sdmmc_card_init
- `out_buffer`: Output buffer of the CIS data
- `buffer_size`: Size of the buffer.
- `inout_cis_size`: Mandatory, pointer to a size, input and output.

- input: Limitation of maximum searching range, should be 0 or larger than buffer_size. The function searches for CIS_CODE_END until this range. Set to 0 to search infinitely.
- output: The size required to store all the CIS data, if CIS_CODE_END is found.

esp_err_t **sdmmc_io_print_cis_info**(uint8_t **buffer*, size_t *buffer_size*, FILE **fp*)

Parse and print the CIS information of a SDIO card.

Note Not all the CIS codes and all kinds of tuples are supported. If you see some unresolved code, you can add the parsing of these code in sdmmc_io.c and contribute to the IDF through the Github repository.

```
using sdmmc_card_init
```

Return

- ESP_OK: on success
- ESP_ERR_NOT_SUPPORTED: if the value from the card is not supported to be parsed.
- ESP_ERR_INVALID_SIZE: if the CIS size fields are not correct.

Parameters

- `buffer`: Buffer to parse
- `buffer_size`: Size of the buffer.
- `fp`: File pointer to print to, set to NULL to print to stdout.

Header File

- driver/include/driver/sdmmc_types.h

Structures

struct sdmmc_csd_t

Decoded values from SD card Card Specific Data register

Public Members

int **csd_ver**

CSD structure format

int **mmc_ver**

MMC version (for CID format)

int **capacity**

total number of sectors

int **sector_size**

sector size in bytes

int **read_block_len**

block length for reads

int **card_command_class**

Card Command Class for SD

int **tr_speed**

Max transfer speed

struct sdmmc_cid_t

Decoded values from SD card Card IDentification register

Public Members

int **mfg_id**

manufacturer identification number

int **oem_id**

OEM/product identification number

char **name**[8]
product name (MMC v1 has the longest)

int **revision**
product revision

int **serial**
product serial number

int **date**
manufacturing date

struct sdmmc_scr_t
Decoded values from SD Configuration Register

Public Members

int **sd_spec**
SD Physical layer specification version, reported by card

int **bus_width**
bus widths supported by card: BIT(0) —1-bit bus, BIT(2) —4-bit bus

struct sdmmc_ext_csd_t
Decoded values of Extended Card Specific Data

Public Members

uint8_t **power_class**
Power class used by the card

struct sdmmc_switch_func_rsp_t
SD SWITCH_FUNC response buffer

Public Members

uint32_t **data**[512 / 8 / sizeof(uint32_t)]
response data

struct sdmmc_command_t
SD/MMC command information

Public Members

uint32_t **opcode**
SD or MMC command index

uint32_t **arg**
SD/MMC command argument

sdmmc_response_t **response**
response buffer

void ***data**
buffer to send or read into

size_t **datalen**
length of data buffer

size_t **blklen**
block length

int **flags**
see below

esp_err_t **error**
error returned from transfer

int **timeout_ms**
response timeout, in milliseconds

struct sdmmc_host_t
SD/MMC Host description

This structure defines properties of SD/MMC host and functions of SD/MMC host which can be used by upper layers.

Public Members

uint32_t **flags**
flags defining host properties

int **slot**
slot number, to be passed to host functions

int **max_freq_khz**
max frequency supported by the host

float **io_voltage**
I/O voltage used by the controller (voltage switching is not supported)

esp_err_t (***init**) (void)
Host function to initialize the driver

esp_err_t (***set_bus_width**) (int slot, size_t width)
host function to set bus width

size_t (***get_bus_width**) (int slot)
host function to get bus width

esp_err_t (***set_bus_ddr_mode**) (int slot, bool ddr_enable)
host function to set DDR mode

esp_err_t (***set_card_clk**) (int slot, uint32_t freq_khz)
host function to set card clock frequency

esp_err_t (***do_transaction**) (int slot, *sdmmc_command_t* *cmdinfo)
host function to do a transaction

esp_err_t (***deinit**) (void)
host function to deinitialize the driver

esp_err_t (***deinit_p**) (int slot)
host function to deinitialize the driver, called with the `slot`

esp_err_t (***io_int_enable**) (int slot)
Host function to enable SDIO interrupt line

esp_err_t (***io_int_wait**) (int slot, TickType_t timeout_ticks)
Host function to wait for SDIO interrupt line to be active

int **command_timeout_ms**
timeout, in milliseconds, of a single command. Set to 0 to use the default value.

struct sdmmc_card_t
SD/MMC card information structure

Public Members

sdmmc_host_t **host**
Host with which the card is associated

uint32_t **ocr**
OCR (Operation Conditions Register) value

sdmmc_cid_t **cid**
decoded CID (Card IDentification) register value

sdmmc_response_t **raw_cid**
raw CID of MMC card to be decoded after the CSD is fetched in the data transfer mode

sdmmc_csd_t **csd**
decoded CSD (Card-Specific Data) register value

sdmmc_scr_t **scr**
decoded SCR (SD card Configuration Register) value

sdmmc_ext_csd_t **ext_csd**
decoded EXT_CSD (Extended Card Specific Data) register value

uint16_t **rca**
RCA (Relative Card Address)

uint16_t **max_freq_khz**
Maximum frequency, in kHz, supported by the card

uint32_t **is_mem** : 1
Bit indicates if the card is a memory card

uint32_t **is_sdio** : 1
Bit indicates if the card is an IO card

uint32_t **is_mmc** : 1
Bit indicates if the card is MMC

uint32_t **num_io_functions** : 3
If is_sdio is 1, contains the number of IO functions on the card

uint32_t **log_bus_width** : 2
log2(bus width supported by card)

uint32_t **is_ddr** : 1
Card supports DDR mode

uint32_t **reserved** : 23
Reserved for future expansion

Macros

SDMMC_HOST_FLAG_1BIT
host supports 1-line SD and MMC protocol

SDMMC_HOST_FLAG_4BIT
host supports 4-line SD and MMC protocol

SDMMC_HOST_FLAG_8BIT
host supports 8-line MMC protocol

SDMMC_HOST_FLAG_SPI
host supports SPI protocol

SDMMC_HOST_FLAG_DDR
host supports DDR mode for SD/MMC

SDMMC_HOST_FLAG_DEINIT_ARG
host `deinit` function called with the slot argument

SDMMC_FREQ_DEFAULT
SD/MMC Default speed (limited by clock divider)

SDMMC_FREQ_HIGHSPEED
SD High speed (limited by clock divider)

SDMMC_FREQ_PROBING
SD/MMC probing speed

SDMMC_FREQ_52M
MMC 52MHz speed

SDMMC_FREQ_26M
MMC 26MHz speed

Type Definitions

typedef uint32_t **sdmmc_response_t**[4]
SD/MMC command response buffer

2.6.3 非易失性存储库

简介

非易失性存储 (NVS) 库主要用于在 flash 中存储键值格式的数据。本文档将详细介绍 NVS 常用的一些概念。

底层存储 NVS 库通过调用*esp_partition* API 使用主 flash 的部分空间，即类型为 `data` 且子类型为 `nvs` 的所有分区。应用程序可调用*`nvs_open()`* API 选择使用带有 `nvs` 标签的分区，也可以通过调用*`nvs_open_from_partition()`* API 选择使用指定名称的任意分区。

NVS 库后续版本可能会增加其他存储器后端，来将数据保存至其他 flash 芯片（SPI 或 I2C 接口）、RTC 或 FRAM 中。

注解： 如果 NVS 分区被截断（例如，更改分区表布局时），则应擦除分区内容。可以使用 ESP-IDF 构建系统中的 `idf.py erase_flash` 命令擦除 flash 上的所有内容。

注解： NVS 最适合存储一些较小的数据，而非字符串或二进制大对象 (BLOB) 等较大的数据。如需存储较大的 BLOB 或者字符串，请考虑使用基于磨损均衡库的 FAT 文件系统。

键值对 NVS 的操作对象为键值对，其中键是 ASCII 字符串，当前支持的最大键长为 15 个字符。值可以为以下几种类型：

- 整数型：`uint8_t`、`int8_t`、`uint16_t`、`int16_t`、`uint32_t`、`int32_t`、`uint64_t` 和 `int64_t`；
- 以 0 结尾的字符串；
- 可变长度的二进制数据 (BLOB)

注解： 字符串值当前上限为 4000 字节，其中包括空终止符。BLOB 值上限为 508,000 字节或分区大小的 97.6% 减去 4000 字节，以较低值为准。

后续可能会增加对 `float` 和 `double` 等其他类型数据的支持。

键必须唯一。为现有的键写入新的值可能产生如下结果：

- 如果新旧值数据类型相同，则更新值；

- 如果新旧值数据类型不同，则返回错误。

读取值时也会执行数据类型检查。如果读取操作的数据类型与该值的数据类型不匹配，则返回错误。

命名空间 为了减少不同组件之间键名的潜在冲突，NVS 将每个键值对分配给一个命名空间。命名空间的命名规则遵循键名的命名规则，例如，最多可占 15 个字符。命名空间的名称在调用*nvs_open()*或*nvs_open_from_partition* 中指定，调用后将返回一个不透明句柄，用于后续调用 nvs_get_*、nvs_set_* 和 nvs_commit 函数。这样，一个句柄关联一个命名空间，键名便不会与其他命名空间中相同键名冲突。请注意，不同 NVS 分区中具有相同名称的命名空间将被视为不同的命名空间。

NVS 迭代器 迭代器允许根据指定的分区名称、命名空间和数据类型轮询 NVS 中存储的键值对。

您可以使用以下函数，执行相关操作：

- nvs_entry_find：返回一个不透明句柄，用于后续调用 nvs_entry_next 和 nvs_entry_info 函数；
- nvs_entry_next：返回指向下一个键值对的迭代器；
- nvs_entry_info：返回每个键值对的信息。

如果未找到符合标准的键值对，nvs_entry_find 和 nvs_entry_next 将返回 NULL，此时不必释放迭代器。若不再需要迭代器，可使用 nvs_release_iterator 释放迭代器。

安全性、篡改性及鲁棒性 NVS 与 ESP32 flash 加密系统不直接兼容。但如果 NVS 加密与 ESP32 flash 加密一起使用时，数据仍可以加密形式存储。详情请参阅*NVS 加密*。

如果未启用 NVS 加密，任何对 flash 芯片有物理访问权限的用户都可以修改、擦除或添加键值对。NVS 加密启用后，如果不知道相应的 NVS 加密密钥，则无法修改或添加键值对并将其识别为有效键值对。但是，针对擦除操作没有相应的防篡改功能。

当 flash 处于不一致状态时，NVS 库会尝试恢复。在任何时间点关闭设备电源，然后重新打开电源，不会导致数据丢失；但如果关闭设备电源时正在写入新的键值对，这一键值对可能会丢失。该库还应当能对 flash 中的任意数据进行正确初始化。

NVS 加密

NVS 分区内存储的数据可使用 AES-XTS 进行加密，类似于 IEEE P1619 磁盘加密标准中提到的加密方式。为了实现加密，每个条目被均视为一个扇区，并将条目相对地址（相对于分区开头）传递给加密算法，用作扇区号。可通过*CONFIG_NVS_ENCRYPTION* 启用 NVS 加密。NVS 加密所需的密钥存储于其他分区，并且被*Flash 加密* 保护。因此，在使用 NVS 加密前应先启用*Flash 加密*。

启用*Flash 加密* 时，默认启用 NVS 加密。这是因为 Wi-Fi 驱动在默认的 NVS 分区中存储了凭证（如 SSID 和密码）。启用平台级加密后，仍需将它们作为默认选项进行加密。

使用 NVS 加密，分区表必须包含*NVS 密钥分区*。在分区表选项 (menuconfig->Partition Table) 下，为 NVS 加密提供了两个包含*NVS 密钥分区* 的分区表，您可以通过工程配置菜单 (idf.py menuconfig) 进行选择。请参考 security/flash_encryption 中的例子，了解如何配置和使用 NVS 加密功能。

NVS 密钥分区

应用程序如果想使用 NVS 加密，则需要编译进一个类型为 *data*，子类型为 *key* 的密钥分区。该分区应标记为 已加密且最小为 4096 字节。如需了解更多详细信息，请参考分区表。在分区表选项 (menuconfig->Partition Table) 下提供了两个包含*NVS 密钥分区* 的额外分区表，可以直接用于*NVS 加密*。这些分区的具体结构见下表：

```
+-----------+-------------+-------------+----+
|              XTS encryption key (32)         |
+----------------------------------------------+
|              XTS tweak key (32)              |
+----------------------------------------------+
```

(下页继续)

(续上页)

```
|                   CRC32 (4)                   |
+-----------------------------------------------+
```

可以通过以下两种方式生成*NVS 密钥分区* 中的 XTS 加密密钥：

1. 在 ESP 芯片上生成密钥：
   启用 NVS 加密时，可用`nvs_flash_init()` API 函数来初始化加密的默认 NVS 分区，在内部生成 ESP 芯片上的 XTS 加密密钥。在找到*NVS 密钥分区* 后，API 函数利用 nvs_flash/include/nvs_flash.h 提供的`nvs_flash_generate_keys()` 函数，自动生成并存储该分区中的 NVS 密钥。只有当各自的密钥分区为空时，才会生成并存储新的密钥。可以借助`nvs_flash_secure_init_partition()` 用同一个密钥分区来读取安全配置，以初始化一个定制的加密 NVS 分区。
   API 函数`nvs_flash_secure_init()` 和`nvs_flash_secure_init_partition()` 不在内部产生密钥。当这些 API 函数用于初始化加密的 NVS 分区时，可以在启动后使用 *nvs_flash.h* 提供的`nvs_flash_generate_keys()` API 函数生成密钥，以加密的形式把密钥写到密钥分区上。
2. 使用预先生成的密钥分区：
   若*NVS 密钥分区* 中的密钥不是由应用程序生成，则需要使用预先生成的密钥分区。可以使用*NVS 分区生成工具* 生成包含 XTS 加密密钥的*NVS 密钥分区*。用户可以借助以下两个命令，将预先生成的密钥分区储存在 flash 上：
   i) 建立并烧录分区表

   ```
   idf.py partition-table partition-table-flash
   ```

   ii) 调用 parttool.py，将密钥存储在 flash 上的*NVS 密钥分区* 中。详见:doc:‘ 分区表 </api-guides/partition-tables>‘ 的分区工具部分。
   parttool.py –port /dev/ttyUSB0 –partition-table-offset “nvs_key partition offset” write_partition –partition-name=” name of nvs_key partition” –input “nvs_key partition”

由于分区已标记为 *已加密*，而且启用了*Flash 加密*，引导程序在首次启动时将使用 flash 加密对密钥分区进行加密。

应用程序可以使用不同的密钥对不同的 NVS 分区进行加密，这样就会需要多个加密密钥分区。应用程序应为加解密操作提供正确的密钥或密钥分区。

加密读取/写入 `nvs_get_*` 和 `nvs_set_*` 等 NVS API 函数同样可以对 NVS 加密分区执行读写操作。

加密默认的 NVS 分区： 无需额外步骤即可启用默认 NVS 分区的加密。启用*CONFIG_NVS_ENCRYPTION* 时，`nvs_flash_init()` API 函数会在内部使用找到的第一个*NVS 密钥分区* 执行额外步骤，以启用默认 NVS 分区的加密（详情请参考 API 文档）。另外，`nvs_flash_secure_init()` API 函数也可以用来启用默认 NVS 分区的加密。

加密一个自定义的 NVS 分区： 使用`nvs_flash_secure_init_partition()` API 函数启用自定义 NVS 分区的加密，而非`nvs_flash_init_partition()`。

使用`nvs_flash_secure_init()` 和`nvs_flash_secure_init_partition()` API 函数时，应用程序如需在加密状态下执行 NVS 读写操作，应遵循以下步骤：

1. 使用 `esp_partition_find*` API 查找密钥分区和 NVS 数据分区；
2. 使用 `nvs_flash_read_security_cfg` 或 `nvs_flash_generate_keys` API 填充 `nvs_sec_cfg_t` 结构；
3. 使用 `nvs_flash_secure_init` 或 `nvs_flash_secure_init_partition` API 初始化 NVS flash 分区；
4. 使用 `nvs_open` 或 `nvs_open_from_partition` API 打开命名空间；
5. 使用 `nvs_get_*` 或 `nvs_set_*` API 执行 NVS 读取/写入操作；
6. 使用 `nvs_flash_deinit` API 释放已初始化的 NVS 分区。

NVS 分区生成程序

NVS 分区生成程序帮助生成 NVS 分区二进制文件，可使用烧录程序将二进制文件单独烧录至特定分区。烧录至分区上的键值对由 CSV 文件提供，详情请参考*NVS 分区生成程序*。

应用示例

ESP-IDF storage 目录下提供了数个代码示例：

storage/nvs_rw_value

演示如何读取及写入 NVS 单个整数值。

此示例中的值表示 ESP32 模组重启次数。NVS 中数据不会因为模组重启而丢失，因此只有将这一值存储于 NVS 中，才能起到重启次数计数器的作用。

该示例也演示了如何检测读取/写入操作是否成功，以及某个特定值是否在 NVS 中尚未初始化。诊断程序以纯文本形式提供，帮助您追踪程序流程，及时发现问题。

storage/nvs_rw_blob

演示如何读取及写入 NVS 单个整数值和 Blob（二进制大对象），并在 NVS 中存储这一数值，即便 ESP32 模组重启也不会消失。

- value - 记录 ESP32 模组软重启次数和硬重启次数。
- blob - 内含记录模组运行次数的表格。此表格将被从 NVS 读取至动态分配的 RAM 上。每次手动软重启后，表格内运行次数即增加一次，新加的运行次数被写入 NVS。下拉 GPIO0 即可手动软重启。

该示例也演示了如何执行诊断程序以检测读取/写入操作是否成功。

storage/nvs_rw_value_cxx

这个例子与 storage/nvs_rw_value 完全一样，只是使用了 C++ 的 NVS 处理类。

内部实现

键值对日志 NVS 按顺序存储键值对，新的键值对添加在最后。因此，如需更新某一键值对，实际是在日志最后增加一对新的键值对，同时将旧的键值对标记为已擦除。

页面和条目 NVS 库在其操作中主要使用两个实体：页面和条目。页面是一个逻辑结构，用于存储部分的整体日志。逻辑页面对应 flash 的一个物理扇区，正在使用中的页面具有与之相关联的 序列号。序列号赋予了页面顺序，较高的序列号对应较晚创建的页面。页面有以下几种状态：

空或未初始化 页面对应的 flash 扇区为空白状态（所有字节均为 `0xff`）。此时，页面未存储任何数据且没有关联的序列号。

活跃状态 此时 flash 已完成初始化，页头部写入 flash，页面已具备有效序列号。页面中存在一些空条目，可写入数据。任意时刻，至多有一个页面处于活跃状态。

写满状态 Flash 已写满键值对，状态不再改变。用户无法向写满状态下的页面写入新键值对，但仍可将一些键值对标记为已擦除。

擦除状态 未擦除的键值对将移至其他页面，以便擦除当前页面。这一状态仅为暂时性状态，即 API 调用返回时，页面应脱离这一状态。如果设备突然断电，下次开机时，设备将继续把未擦除的键值对移至其他页面，并继续擦除当前页面。

损坏状态 页头部包含无效数据，无法进一步解析该页面中的数据，因此之前写入该页面的所有条目均无法访问。相应的 flash 扇区并不会被立即擦除，而是与其他处于未初始化状态的扇区一起等待后续使用。这一状态可能对调试有用。

Flash 扇区映射至逻辑页面并没有特定的顺序，NVS 库会检查存储在 flash 扇区的页面序列号，并根据序列号组织页面。

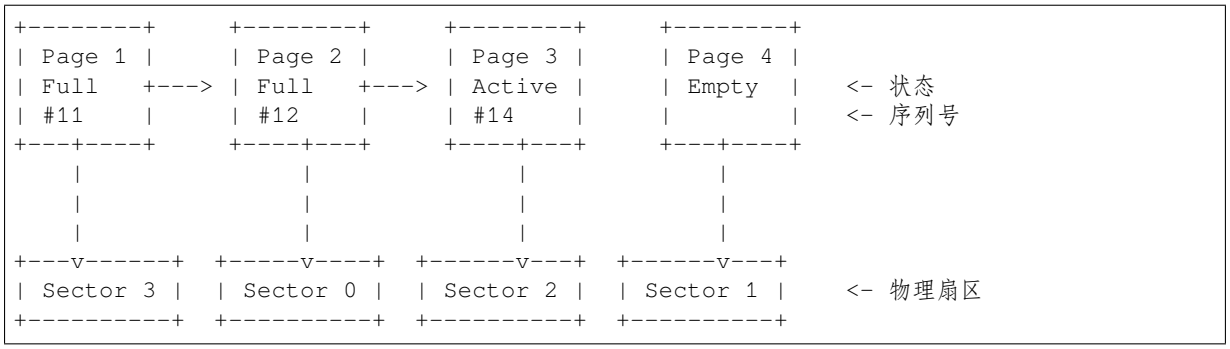

页面结构 当前，我们假设 flash 扇区大小为 4096 字节，并且 ESP32 flash 加密硬件在 32 字节块上运行。未来有可能引入一些编译时可配置项（可通过 menuconfig 进行配置），以适配具有不同扇区大小的 flash 芯片。但目前尚不清楚 SPI flash 驱动和 SPI flash cache 之类的系统组件是否支持其他扇区大小。

页面由头部、条目状态位图和条目三部分组成。为了实现与 ESP32 flash 加密功能兼容，条目大小设置为 32 字节。如果键值为整数型，条目则保存一个键值对；如果键值为字符串或 BLOB 类型，则条目仅保存一个键值对的部分内容（更多信息详见条目结构描述）。

页面结构如下图所示，括号内数字表示该部分的大小（以字节为单位）。

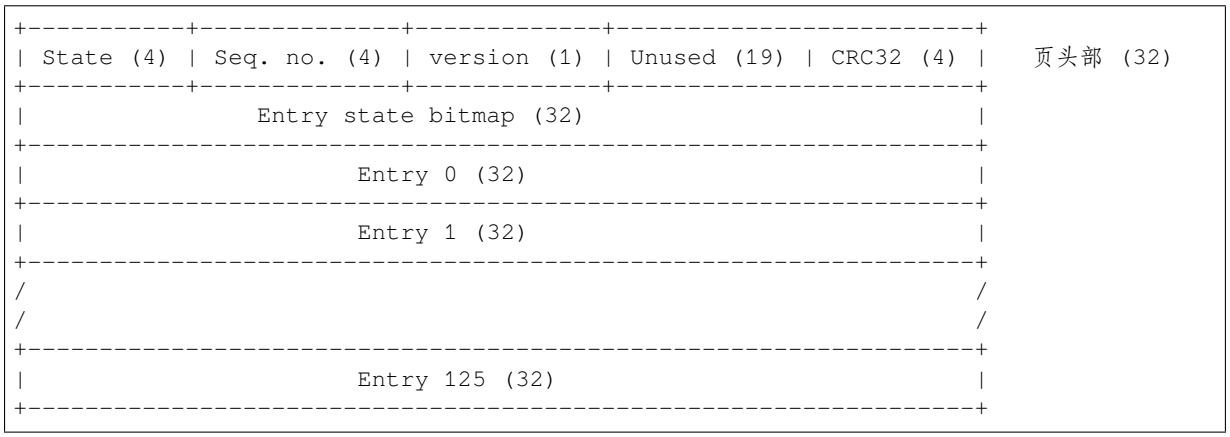

头部和条目状态位图写入 flash 时不加密。如果启用了 ESP32 flash 加密功能，则条目写入 flash 时将会加密。

通过将 0 写入某些位可以定义页面状态值，表示状态改变。因此，如果需要变更页面状态，并不一定要擦除页面，除非要将其变更为 擦除状态。

头部中的 `version` 字段反映了所用的 NVS 格式版本。为实现向后兼容，版本升级从 0xff 开始依次递减（例如，version-1 为 0xff，version-2 为 0xfe，以此类推）。

头部中 CRC32 值是由不包含状态值的条目计算所得（4 到 28 字节）。当前未使用的条目用 `0xff` 字节填充。

条目结构和条目状态位图的详细信息见下文描述。

条目和条目状态位图 每个条目可处于以下三种状态之一，每个状态在条目状态位图中用两位表示。位图中的最后四位 (256 - 2 * 126) 未使用。

空 (2’ b11) 条目还未写入任何内容，处于未初始化状态（全部字节为 `0xff`）。
写入（2’ b10） 一个键值对（或跨多个条目的键值对的部分内容）已写入条目中。
擦除（2’ b00） 条目中的键值对已丢弃，条目内容不再解析。

条目结构 如果键值类型为基础类型，即 1 - 8 个字节长度的整数型，条目将保存一个键值对；如果键值类型为字符串或 BLOB 类型，条目将保存整个键值对的部分内容。另外，如果键值为字符串类型且跨多个条目，则键值所跨的所有条目均保存在同一页面。BLOB 则可以切分为多个块，实现跨多个页面。

BLOB 索引是一个附加的固定长度元数据条目，用于追踪 BLOB 块。目前条目仍支持早期 BLOB 格式（可读取可修改），但这些 BLOB 一经修改，即以新格式储存至条目。

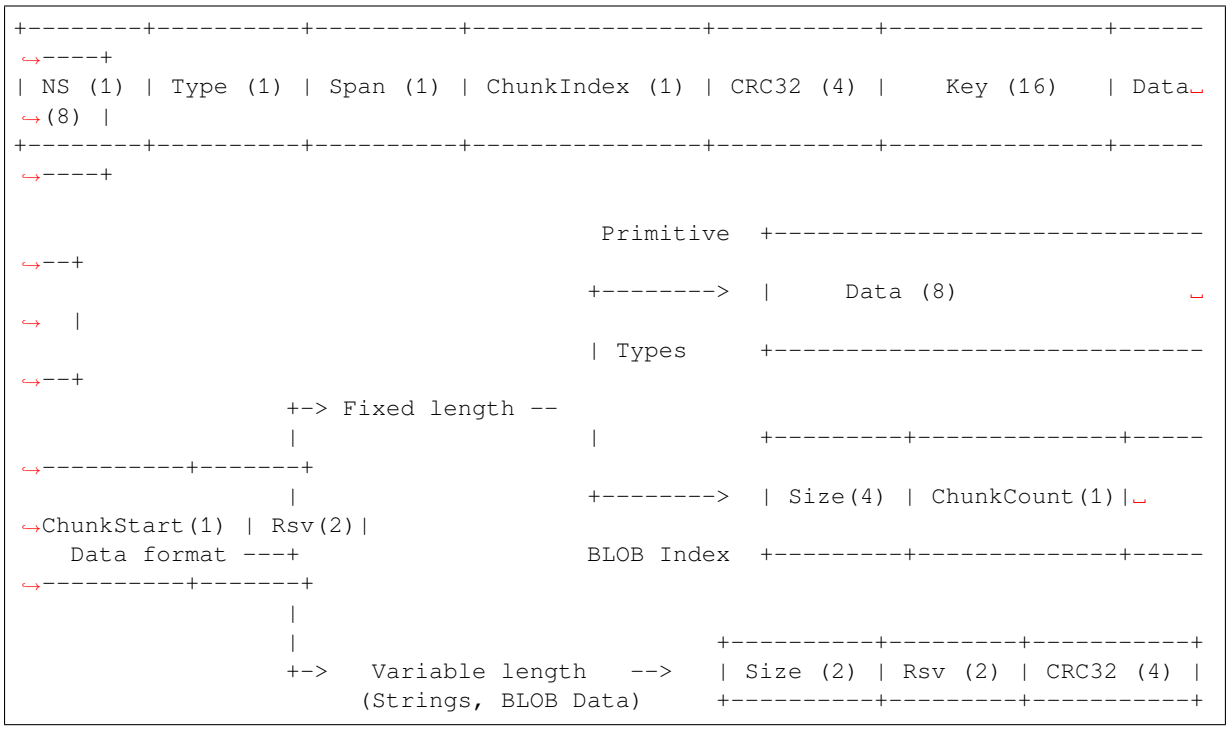

条目结构中各个字段含义如下：

命名空间 (NS, NameSpace) 该条目的命名空间索引，详细信息参见命名空间实现章节。

类型 (Type) 一个字节表示的值的数据类型，nvs_flash/include/nvs_handle.hpp 下的 `ItemType` 枚举了可能的类型。

跨度 (Span) 该键值对所用的条目数量。如果键值为整数型，条目数量即为 1。如果键值为字符串或 BLOB，则条目数量取决于值的长度。

块索引 (ChunkIndex) 用于存储 BLOB 类型数据块的索引。如果键值为其他数据类型，则此处索引应写入 `0xff`。

CRC32 对条目下所有字节进行校验后，所得的校验和（CRC32 字段不计算在内）。

键 (Key) 即以零结尾的 ASCII 字符串，字符串最长为 15 字节，不包含最后一个字节的零终止符。

数据 (Data) 如果键值类型为整数型，则数据字段仅包含键值。如果键值小于八个字节，使用 `0xff` 填充未使用的部分（右侧）。

如果键值类型为 BLOB 索引条目，则该字段的八个字节将保存以下数据块信息：

- **块大小** 整个 BLOB 数据的大小（以字节为单位）。该字段仅用于 BLOB 索引类型条目。
- **ChunkCount** 存储过程中 BLOB 分成的数据块总量。该字段仅用于 BLOB 索引类型条目。
- **ChunkStart** BLOB 第一个数据块的块索引，后续数据块索引依次递增，步长为 1。该字段仅用于 BLOB 索引类型条目。

如果键值类型为字符串或 BLOB 数据块，数据字段的这八个字节将保存该键值的一些附加信息，如下所示：

- **数据大小** 实际数据的大小（以字节为单位）。如果键值类型为字符串，此字段也应将零终止符包含在内。此字段仅用于字符串和 BLOB 类型条目。
- **CRC32** 数据所有字节的校验和，该字段仅用于字符串和 BLOB 类型条目。

可变长度值（字符串和 BLOB）写入后续条目，每个条目 32 字节。第一个条目的 *Span* 字段将指明使用了多少条目。

命名空间 如上所述，每个键值对属于一个命名空间。命名空间标识符（字符串）也作为键值对的键，存储在索引为 0 的命名空间中。与这些键对应的值就是这些命名空间的索引。

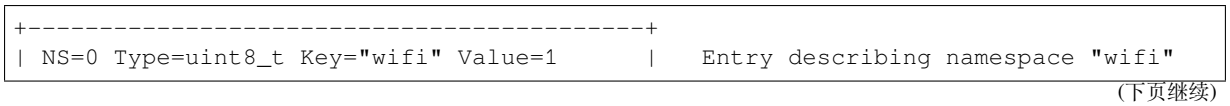

（下页继续）

(续上页)

```
+-----------------------------------------+
| NS=1 Type=uint32_t Key="channel" Value=6  |   Key "channel" in namespace "wifi"
+-----------------------------------------+
| NS=0 Type=uint8_t Key="pwm" Value=2       |   Entry describing namespace "pwm"
+-----------------------------------------+
| NS=2 Type=uint16_t Key="channel" Value=20 |   Key "channel" in namespace "pwm"
+-----------------------------------------+
```

条目哈希列表 为了减少对 flash 执行的读操作次数，Page 类对象均设有一个列表，包含一对数据：条目索引和条目哈希值。该列表可大大提高检索速度，而无需迭代所有条目并逐个从 flash 中读取。`Page::findItem` 首先从哈希列表中检索条目哈希值，如果条目存在，则在页面内给出条目索引。由于哈希冲突，在哈希列表中检索条目哈希值可能会得到不同的条目，对 flash 中条目再次迭代可解决这一冲突。

哈希列表中每个节点均包含一个 24 位哈希值和 8 位条目索引。哈希值根据条目命名空间、键名和块索引由 CRC32 计算所得，计算结果保留 24 位。为减少将 32 位条目存储在链表中的开销，链表采用了数组的双向链表。每个数组占用 128 个字节，包含 29 个条目、两个链表指针和一个 32 位计数字段。因此，每页额外需要的 RAM 最少为 128 字节，最多为 640 字节。

API 参考

Header File

- nvs_flash/include/nvs_flash.h

Functions

esp_err_t **nvs_flash_init**(void)

Initialize the default NVS partition.

This API initialises the default NVS partition. The default NVS partition is the one that is labeled “nvs” in the partition table.

When “NVS_ENCRYPTION” is enabled in the menuconfig, this API enables the NVS encryption for the default NVS partition as follows

1. Read security configurations from the first NVS key partition listed in the partition table. (NVS key partition is any “data” type partition which has the subtype value set to “nvs_keys”)
2. If the NVS key partiton obtained in the previous step is empty, generate and store new keys in that NVS key partiton.
3. Internally call “nvs_flash_secure_init()” with the security configurations obtained/generated in the previous steps.

Post initialization NVS read/write APIs remain the same irrespective of NVS encryption.

Return

- ESP_OK if storage was successfully initialized.
- ESP_ERR_NVS_NO_FREE_PAGES if the NVS storage contains no empty pages (which may happen if NVS partition was truncated)
- ESP_ERR_NOT_FOUND if no partition with label “nvs” is found in the partition table
- ESP_ERR_NO_MEM in case memory could not be allocated for the internal structures
- one of the error codes from the underlying flash storage driver
- error codes from nvs_flash_read_security_cfg API (when “NVS_ENCRYPTION” is enabled).
- error codes from nvs_flash_generate_keys API (when “NVS_ENCRYPTION” is enabled).
- error codes from nvs_flash_secure_init_partition API (when “NVS_ENCRYPTION” is enabled) .

esp_err_t **nvs_flash_init_partition**(**const** char *_partition_label_)

Initialize NVS flash storage for the specified partition.

Return

- ESP_OK if storage was successfully initialized.

- ESP_ERR_NVS_NO_FREE_PAGES if the NVS storage contains no empty pages (which may happen if NVS partition was truncated)
- ESP_ERR_NOT_FOUND if specified partition is not found in the partition table
- ESP_ERR_NO_MEM in case memory could not be allocated for the internal structures
- one of the error codes from the underlying flash storage driver

Parameters

- `[in] partition_label`: Label of the partition. Must be no longer than 16 characters.

esp_err_t **nvs_flash_init_partition_ptr**(**const** *esp_partition_t* **partition*)

Initialize NVS flash storage for the partition specified by partition pointer.

Return

- ESP_OK if storage was successfully initialized
- ESP_ERR_NVS_NO_FREE_PAGES if the NVS storage contains no empty pages (which may happen if NVS partition was truncated)
- ESP_ERR_INVALID_ARG in case partition is NULL
- ESP_ERR_NO_MEM in case memory could not be allocated for the internal structures
- one of the error codes from the underlying flash storage driver

Parameters

- `[in] partition`: pointer to a partition obtained by the ESP partition API.

esp_err_t **nvs_flash_deinit**(void)

Deinitialize NVS storage for the default NVS partition.

Default NVS partition is the partition with "nvs" label in the partition table.

Return

- ESP_OK on success (storage was deinitialized)
- ESP_ERR_NVS_NOT_INITIALIZED if the storage was not initialized prior to this call

esp_err_t **nvs_flash_deinit_partition**(**const** char **partition_label*)

Deinitialize NVS storage for the given NVS partition.

Return

- ESP_OK on success
- ESP_ERR_NVS_NOT_INITIALIZED if the storage for given partition was not initialized prior to this call

Parameters

- `[in] partition_label`: Label of the partition

esp_err_t **nvs_flash_erase**(void)

Erase the default NVS partition.

Erases all contents of the default NVS partition (one with label "nvs").

Note If the partition is initialized, this function first de-initializes it. Afterwards, the partition has to be initialized again to be used.

Return

- ESP_OK on success
- ESP_ERR_NOT_FOUND if there is no NVS partition labeled "nvs" in the partition table
- different error in case de-initialization fails (shouldn't happen)

esp_err_t **nvs_flash_erase_partition**(**const** char **part_name*)

Erase specified NVS partition.

Erase all content of a specified NVS partition

Note If the partition is initialized, this function first de-initializes it. Afterwards, the partition has to be initialized again to be used.

Return

- ESP_OK on success
- ESP_ERR_NOT_FOUND if there is no NVS partition with the specified name in the partition table
- different error in case de-initialization fails (shouldn't happen)

Parameters

- `[in] part_name`: Name (label) of the partition which should be erased

esp_err_t **nvs_flash_erase_partition_ptr**(**const** *esp_partition_t* **partition*)
Erase custom partition.

Erase all content of specified custom partition.

Note If the partition is initialized, this function first de-initializes it. Afterwards, the partition has to be initialized again to be used.

Return
- ESP_OK on success
- ESP_ERR_NOT_FOUND if there is no partition with the specified parameters in the partition table
- ESP_ERR_INVALID_ARG in case partition is NULL
- one of the error codes from the underlying flash storage driver

Parameters
- `[in] partition`: pointer to a partition obtained by the ESP partition API.

esp_err_t **nvs_flash_secure_init**(*nvs_sec_cfg_t* **cfg*)
Initialize the default NVS partition.

This API initialises the default NVS partition. The default NVS partition is the one that is labeled “nvs” in the partition table.

Return
- ESP_OK if storage was successfully initialized.
- ESP_ERR_NVS_NO_FREE_PAGES if the NVS storage contains no empty pages (which may happen if NVS partition was truncated)
- ESP_ERR_NOT_FOUND if no partition with label “nvs” is found in the partition table
- ESP_ERR_NO_MEM in case memory could not be allocated for the internal structures
- one of the error codes from the underlying flash storage driver

Parameters
- `[in] cfg`: Security configuration (keys) to be used for NVS encryption/decryption. If cfg is NULL, no encryption is used.

esp_err_t **nvs_flash_secure_init_partition**(**const** char **partition_label*, *nvs_sec_cfg_t* **cfg*)
Initialize NVS flash storage for the specified partition.

Return
- ESP_OK if storage was successfully initialized.
- ESP_ERR_NVS_NO_FREE_PAGES if the NVS storage contains no empty pages (which may happen if NVS partition was truncated)
- ESP_ERR_NOT_FOUND if specified partition is not found in the partition table
- ESP_ERR_NO_MEM in case memory could not be allocated for the internal structures
- one of the error codes from the underlying flash storage driver

Parameters
- `[in] partition_label`: Label of the partition. Note that internally a reference to passed value is kept and it should be accessible for future operations
- `[in] cfg`: Security configuration (keys) to be used for NVS encryption/decryption. If cfg is null, no encryption/decryption is used.

esp_err_t **nvs_flash_generate_keys**(**const** *esp_partition_t* **partition*, *nvs_sec_cfg_t* **cfg*)
Generate and store NVS keys in the provided esp partition.

Return -ESP_OK, if cfg was read successfully; -or error codes from esp_partition_write/erase APIs.

Parameters
- `[in] partition`: Pointer to partition structure obtained using esp_partition_find_first or esp_partition_get. Must be non-NULL.
- `[out] cfg`: Pointer to nvs security configuration structure. Pointer must be non-NULL. Generated keys will be populated in this structure.

esp_err_t **nvs_flash_read_security_cfg**(**const** *esp_partition_t* **partition*, *nvs_sec_cfg_t* **cfg*)
Read NVS security configuration from a partition.

Note Provided parition is assumed to be marked ‘encrypted’.

Return -ESP_OK, if cfg was read successfully; -ESP_ERR_NVS_KEYS_NOT_INITIALIZED, if the partition is not yet written with keys. -ESP_ERR_NVS_CORRUPT_KEY_PART, if the partition containing keys is found to be corrupt -or error codes from esp_partition_read API.

Parameters

- `[in] partition`: Pointer to partition structure obtained using esp_partition_find_first or esp_partition_get. Must be non-NULL.
- `[out] cfg`: Pointer to nvs security configuration structure. Pointer must be non-NULL.

Structures

struct nvs_sec_cfg_t

Key for encryption and decryption.

Public Members

uint8_t **eky**[**NVS_KEY_SIZE**]

XTS encryption and decryption key

uint8_t **tky**[**NVS_KEY_SIZE**]

XTS tweak key

Macros

NVS_KEY_SIZE

Header File

- nvs_flash/include/nvs.h

Functions

esp_err_t **nvs_set_i8** (*nvs_handle_t handle*, **const** char **key*, int8_t *value*)

set int8_t value for given key

Set value for the key, given its name. Note that the actual storage will not be updated until `nvs_commit` is called.

Return

- ESP_OK if value was set successfully
- ESP_ERR_NVS_INVALID_HANDLE if handle has been closed or is NULL
- ESP_ERR_NVS_READ_ONLY if storage handle was opened as read only
- ESP_ERR_NVS_INVALID_NAME if key name doesn't satisfy constraints
- ESP_ERR_NVS_NOT_ENOUGH_SPACE if there is not enough space in the underlying storage to save the value
- ESP_ERR_NVS_REMOVE_FAILED if the value wasn't updated because flash write operation has failed. The value was written however, and update will be finished after re-initialization of nvs, provided that flash operation doesn't fail again.

Parameters

- `[in] handle`: Handle obtained from nvs_open function. Handles that were opened read only cannot be used.
- `[in] key`: Key name. Maximal length is (NVS_KEY_NAME_MAX_SIZE-1) characters. Shouldn't be empty.
- `[in] value`: The value to set.

esp_err_t **nvs_set_u8** (*nvs_handle_t handle*, **const** char **key*, uint8_t *value*)

set uint8_t value for given key

This function is the same as `nvs_set_i8` except for the data type.

esp_err_t **nvs_set_i16** (*nvs_handle_t handle*, **const** char **key*, int16_t *value*)

set int16_t value for given key

This function is the same as `nvs_set_i8` except for the data type.

esp_err_t **nvs_set_u16** (*nvs_handle_t handle*, **const** char ***key*, uint16_t *value*)
set uint16_t value for given key

This function is the same as `nvs_set_i8` except for the data type.

esp_err_t **nvs_set_i32** (*nvs_handle_t handle*, **const** char ***key*, int32_t *value*)
set int32_t value for given key

This function is the same as `nvs_set_i8` except for the data type.

esp_err_t **nvs_set_u32** (*nvs_handle_t handle*, **const** char ***key*, uint32_t *value*)
set uint32_t value for given key

This function is the same as `nvs_set_i8` except for the data type.

esp_err_t **nvs_set_i64** (*nvs_handle_t handle*, **const** char ***key*, int64_t *value*)
set int64_t value for given key

This function is the same as `nvs_set_i8` except for the data type.

esp_err_t **nvs_set_u64** (*nvs_handle_t handle*, **const** char ***key*, uint64_t *value*)
set uint64_t value for given key

This function is the same as `nvs_set_i8` except for the data type.

esp_err_t **nvs_set_str** (*nvs_handle_t handle*, **const** char ***key*, **const** char ***value*)
set string for given key

Set value for the key, given its name. Note that the actual storage will not be updated until `nvs_commit` is called.

Return

- ESP_OK if value was set successfully
- ESP_ERR_NVS_INVALID_HANDLE if handle has been closed or is NULL
- ESP_ERR_NVS_READ_ONLY if storage handle was opened as read only
- ESP_ERR_NVS_INVALID_NAME if key name doesn't satisfy constraints
- ESP_ERR_NVS_NOT_ENOUGH_SPACE if there is not enough space in the underlying storage to save the value
- ESP_ERR_NVS_REMOVE_FAILED if the value wasn't updated because flash write operation has failed. The value was written however, and update will be finished after re-initialization of nvs, provided that flash operation doesn't fail again.
- ESP_ERR_NVS_VALUE_TOO_LONG if the string value is too long

Parameters

- `[in] handle`: Handle obtained from nvs_open function. Handles that were opened read only cannot be used.
- `[in] key`: Key name. Maximal length is (NVS_KEY_NAME_MAX_SIZE-1) characters. Shouldn't be empty.
- `[in] value`: The value to set. For strings, the maximum length (including null character) is 4000 bytes, if there is one complete page free for writing. This decreases, however, if the free space is fragmented.

esp_err_t **nvs_get_i8** (*nvs_handle_t handle*, **const** char ***key*, int8_t ***out_value*)
get int8_t value for given key

These functions retrieve value for the key, given its name. If `key` does not exist, or the requested variable type doesn't match the type which was used when setting a value, an error is returned.

In case of any error, out_value is not modified.

`out_value` has to be a pointer to an already allocated variable of the given type.

```
// Example of using nvs_get_i32:
int32_t max_buffer_size = 4096; // default value
esp_err_t err = nvs_get_i32(my_handle, "max_buffer_size", &max_buffer_size);
```

(下页继续)

(续上页)

```
assert(err == ESP_OK || err == ESP_ERR_NVS_NOT_FOUND);
// if ESP_ERR_NVS_NOT_FOUND was returned, max_buffer_size will still
// have its default value.
```

Return

- ESP_OK if the value was retrieved successfully
- ESP_ERR_NVS_NOT_FOUND if the requested key doesn't exist
- ESP_ERR_NVS_INVALID_HANDLE if handle has been closed or is NULL
- ESP_ERR_NVS_INVALID_NAME if key name doesn't satisfy constraints
- ESP_ERR_NVS_INVALID_LENGTH if length is not sufficient to store data

Parameters

- `[in] handle`: Handle obtained from nvs_open function.
- `[in] key`: Key name. Maximal length is (NVS_KEY_NAME_MAX_SIZE-1) characters. Shouldn't be empty.
- `out_value`: Pointer to the output value. May be NULL for nvs_get_str and nvs_get_blob, in this case required length will be returned in length argument.

esp_err_t **nvs_get_u8** (*nvs_handle_t handle*, **const** char ***key*, uint8_t ***out_value*)

get uint8_t value for given key

This function is the same as `nvs_get_i8` except for the data type.

esp_err_t **nvs_get_i16** (*nvs_handle_t handle*, **const** char ***key*, int16_t ***out_value*)

get int16_t value for given key

This function is the same as `nvs_get_i8` except for the data type.

esp_err_t **nvs_get_u16** (*nvs_handle_t handle*, **const** char ***key*, uint16_t ***out_value*)

get uint16_t value for given key

This function is the same as `nvs_get_i8` except for the data type.

esp_err_t **nvs_get_i32** (*nvs_handle_t handle*, **const** char ***key*, int32_t ***out_value*)

get int32_t value for given key

This function is the same as `nvs_get_i8` except for the data type.

esp_err_t **nvs_get_u32** (*nvs_handle_t handle*, **const** char ***key*, uint32_t ***out_value*)

get uint32_t value for given key

This function is the same as `nvs_get_i8` except for the data type.

esp_err_t **nvs_get_i64** (*nvs_handle_t handle*, **const** char ***key*, int64_t ***out_value*)

get int64_t value for given key

This function is the same as `nvs_get_i8` except for the data type.

esp_err_t **nvs_get_u64** (*nvs_handle_t handle*, **const** char ***key*, uint64_t ***out_value*)

get uint64_t value for given key

This function is the same as `nvs_get_i8` except for the data type.

esp_err_t **nvs_get_str** (*nvs_handle_t handle*, **const** char ***key*, char ***out_value*, size_t ***length*)

get string value for given key

These functions retrieve the data of an entry, given its key. If key does not exist, or the requested variable type doesn't match the type which was used when setting a value, an error is returned.

In case of any error, out_value is not modified.

All functions expect out_value to be a pointer to an already allocated variable of the given type.

nvs_get_str and nvs_get_blob functions support WinAPI-style length queries. To get the size necessary to store the value, call nvs_get_str or nvs_get_blob with zero out_value and non-zero pointer to length. Variable pointed to by length argument will be set to the required length. For nvs_get_str, this length includes the zero terminator. When calling nvs_get_str and nvs_get_blob with non-zero out_value, length has to be non-zero and

has to point to the length available in out_value. It is suggested that nvs_get/set_str is used for zero-terminated C strings, and nvs_get/set_blob used for arbitrary data structures.

```
// Example (without error checking) of using nvs_get_str to get a string into␣
↪dynamic array:
size_t required_size;
nvs_get_str(my_handle, "server_name", NULL, &required_size);
char* server_name = malloc(required_size);
nvs_get_str(my_handle, "server_name", server_name, &required_size);

// Example (without error checking) of using nvs_get_blob to get a binary data
into a static array:
uint8_t mac_addr[6];
size_t size = sizeof(mac_addr);
nvs_get_blob(my_handle, "dst_mac_addr", mac_addr, &size);
```

Return

- ESP_OK if the value was retrieved successfully
- ESP_ERR_NVS_NOT_FOUND if the requested key doesn't exist
- ESP_ERR_NVS_INVALID_HANDLE if handle has been closed or is NULL
- ESP_ERR_NVS_INVALID_NAME if key name doesn't satisfy constraints
- ESP_ERR_NVS_INVALID_LENGTH if `length` is not sufficient to store data

Parameters

- `[in] handle`: Handle obtained from nvs_open function.
- `[in] key`: Key name. Maximal length is (NVS_KEY_NAME_MAX_SIZE-1) characters. Shouldn't be empty.
- `[out] out_value`: Pointer to the output value. May be NULL for nvs_get_str and nvs_get_blob, in this case required length will be returned in length argument.
- `[inout] length`: A non-zero pointer to the variable holding the length of out_value. In case out_value a zero, will be set to the length required to hold the value. In case out_value is not zero, will be set to the actual length of the value written. For nvs_get_str this includes zero terminator.

esp_err_t **nvs_get_blob**(*nvs_handle_t handle*, **const** char ***key*, void ***out_value*, size_t ***length*)

get blob value for given key

This function behaves the same as `nvs_get_str`, except for the data type.

esp_err_t **nvs_open**(**const** char ***name*, *nvs_open_mode_t open_mode*, *nvs_handle_t* ***out_handle*)

Open non-volatile storage with a given namespace from the default NVS partition.

Multiple internal ESP-IDF and third party application modules can store their key-value pairs in the NVS module. In order to reduce possible conflicts on key names, each module can use its own namespace. The default NVS partition is the one that is labelled "nvs" in the partition table.

Return

- ESP_OK if storage handle was opened successfully
- ESP_ERR_NVS_NOT_INITIALIZED if the storage driver is not initialized
- ESP_ERR_NVS_PART_NOT_FOUND if the partition with label "nvs" is not found
- ESP_ERR_NVS_NOT_FOUND id namespace doesn't exist yet and mode is NVS_READONLY
- ESP_ERR_NVS_INVALID_NAME if namespace name doesn't satisfy constraints
- ESP_ERR_NO_MEM in case memory could not be allocated for the internal structures
- other error codes from the underlying storage driver

Parameters

- `[in] name`: Namespace name. Maximal length is (NVS_KEY_NAME_MAX_SIZE-1) characters. Shouldn't be empty.
- `[in] open_mode`: NVS_READWRITE or NVS_READONLY. If NVS_READONLY, will open a handle for reading only. All write requests will be rejected for this handle.
- `[out] out_handle`: If successful (return code is zero), handle will be returned in this argument.

esp_err_t **nvs_open_from_partition**(**const** char ***part_name*, **const** char ***name*, *nvs_open_mode_t open_mode*, *nvs_handle_t* ***out_handle*)

Open non-volatile storage with a given namespace from specified partition.

The behaviour is same as nvs_open() API. However this API can operate on a specified NVS partition instead of default NVS partition. Note that the specified partition must be registered with NVS using nvs_flash_init_partition() API.

Return

- ESP_OK if storage handle was opened successfully
- ESP_ERR_NVS_NOT_INITIALIZED if the storage driver is not initialized
- ESP_ERR_NVS_PART_NOT_FOUND if the partition with specified name is not found
- ESP_ERR_NVS_NOT_FOUND id namespace doesn't exist yet and mode is NVS_READONLY
- ESP_ERR_NVS_INVALID_NAME if namespace name doesn't satisfy constraints
- ESP_ERR_NO_MEM in case memory could not be allocated for the internal structures
- other error codes from the underlying storage driver

Parameters

- `[in] part_name`: Label (name) of the partition of interest for object read/write/erase
- `[in] name`: Namespace name. Maximal length is (NVS_KEY_NAME_MAX_SIZE-1) characters. Shouldn't be empty.
- `[in] open_mode`: NVS_READWRITE or NVS_READONLY. If NVS_READONLY, will open a handle for reading only. All write requests will be rejected for this handle.
- `[out] out_handle`: If successful (return code is zero), handle will be returned in this argument.

esp_err_t **nvs_set_blob** (*nvs_handle_t handle*, **const** char **key*, **const** void **value*, size_t *length*)

set variable length binary value for given key

This family of functions set value for the key, given its name. Note that actual storage will not be updated until nvs_commit function is called.

Return

- ESP_OK if value was set successfully
- ESP_ERR_NVS_INVALID_HANDLE if handle has been closed or is NULL
- ESP_ERR_NVS_READ_ONLY if storage handle was opened as read only
- ESP_ERR_NVS_INVALID_NAME if key name doesn't satisfy constraints
- ESP_ERR_NVS_NOT_ENOUGH_SPACE if there is not enough space in the underlying storage to save the value
- ESP_ERR_NVS_REMOVE_FAILED if the value wasn't updated because flash write operation has failed. The value was written however, and update will be finished after re-initialization of nvs, provided that flash operation doesn't fail again.
- ESP_ERR_NVS_VALUE_TOO_LONG if the value is too long

Parameters

- `[in] handle`: Handle obtained from nvs_open function. Handles that were opened read only cannot be used.
- `[in] key`: Key name. Maximal length is (NVS_KEY_NAME_MAX_SIZE-1) characters. Shouldn't be empty.
- `[in] value`: The value to set.
- `[in] length`: length of binary value to set, in bytes; Maximum length is 508000 bytes or (97.6% of the partition size - 4000) bytes whichever is lower.

esp_err_t **nvs_erase_key** (*nvs_handle_t handle*, **const** char **key*)

Erase key-value pair with given key name.

Note that actual storage may not be updated until nvs_commit function is called.

Return

- ESP_OK if erase operation was successful
- ESP_ERR_NVS_INVALID_HANDLE if handle has been closed or is NULL
- ESP_ERR_NVS_READ_ONLY if handle was opened as read only
- ESP_ERR_NVS_NOT_FOUND if the requested key doesn't exist
- other error codes from the underlying storage driver

Parameters

- `[in] handle`: Storage handle obtained with nvs_open. Handles that were opened read only cannot be used.
- `[in] key`: Key name. Maximal length is (NVS_KEY_NAME_MAX_SIZE-1) characters. Shouldn't be empty.

esp_err_t **nvs_erase_all** (*nvs_handle_t handle*)
Erase all key-value pairs in a namespace.

Note that actual storage may not be updated until nvs_commit function is called.

Return
- ESP_OK if erase operation was successful
- ESP_ERR_NVS_INVALID_HANDLE if handle has been closed or is NULL
- ESP_ERR_NVS_READ_ONLY if handle was opened as read only
- other error codes from the underlying storage driver

Parameters
- `[in] handle`: Storage handle obtained with nvs_open. Handles that were opened read only cannot be used.

esp_err_t **nvs_commit** (*nvs_handle_t handle*)
Write any pending changes to non-volatile storage.

After setting any values, nvs_commit() must be called to ensure changes are written to non-volatile storage. Individual implementations may write to storage at other times, but this is not guaranteed.

Return
- ESP_OK if the changes have been written successfully
- ESP_ERR_NVS_INVALID_HANDLE if handle has been closed or is NULL
- other error codes from the underlying storage driver

Parameters
- `[in] handle`: Storage handle obtained with nvs_open. Handles that were opened read only cannot be used.

void **nvs_close** (*nvs_handle_t handle*)
Close the storage handle and free any allocated resources.

This function should be called for each handle opened with nvs_open once the handle is not in use any more. Closing the handle may not automatically write the changes to nonvolatile storage. This has to be done explicitly using nvs_commit function. Once this function is called on a handle, the handle should no longer be used.

Parameters
- `[in] handle`: Storage handle to close

esp_err_t **nvs_get_stats** (**const** char **part_name*, *nvs_stats_t* **nvs_stats*)
Fill structure *nvs_stats_t*. It provides info about used memory the partition.

This function calculates to runtime the number of used entries, free entries, total entries, and amount namespace in partition.

```
// Example of nvs_get_stats() to get the number of used entries and free␣
↪entries:
nvs_stats_t nvs_stats;
nvs_get_stats(NULL, &nvs_stats);
printf("Count: UsedEntries = (%d), FreeEntries = (%d), AllEntries = (%d)\n",
       nvs_stats.used_entries, nvs_stats.free_entries, nvs_stats.total_
↪entries);
```

Return
- ESP_OK if the changes have been written successfully. Return param nvs_stats will be filled.
- ESP_ERR_NVS_PART_NOT_FOUND if the partition with label "name" is not found. Return param nvs_stats will be filled 0.
- ESP_ERR_NVS_NOT_INITIALIZED if the storage driver is not initialized. Return param nvs_stats will be filled 0.
- ESP_ERR_INVALID_ARG if nvs_stats equal to NULL.
- ESP_ERR_INVALID_STATE if there is page with the status of INVALID. Return param nvs_stats will be filled not with correct values because not all pages will be counted. Counting will be interrupted at the first INVALID page.

Parameters

- `[in] part_name`: Partition name NVS in the partition table. If pass a NULL than will use NVS_DEFAULT_PART_NAME (“nvs”).
- `[out] nvs_stats`: Returns filled structure nvs_states_t. It provides info about used memory the partition.

esp_err_t **nvs_get_used_entry_count** (*nvs_handle_t handle*, size_t **used_entries*)

Calculate all entries in a namespace.

An entry represents the smallest storage unit in NVS. Strings and blobs may occupy more than one entry. Note that to find out the total number of entries occupied by the namespace, add one to the returned value used_entries (if err is equal to ESP_OK). Because the name space entry takes one entry.

```
// Example of nvs_get_used_entry_count() to get amount of all key-value pairs␣
↪in one namespace:
nvs_handle_t handle;
nvs_open("namespace1", NVS_READWRITE, &handle);
...
size_t used_entries;
size_t total_entries_namespace;
if(nvs_get_used_entry_count(handle, &used_entries) == ESP_OK){
    // the total number of entries occupied by the namespace
    total_entries_namespace = used_entries + 1;
}
```

Return

- ESP_OK if the changes have been written successfully. Return param used_entries will be filled valid value.
- ESP_ERR_NVS_NOT_INITIALIZED if the storage driver is not initialized. Return param used_entries will be filled 0.
- ESP_ERR_NVS_INVALID_HANDLE if handle has been closed or is NULL. Return param used_entries will be filled 0.
- ESP_ERR_INVALID_ARG if used_entries equal to NULL.
- Other error codes from the underlying storage driver. Return param used_entries will be filled 0.

Parameters

- `[in] handle`: Handle obtained from nvs_open function.
- `[out] used_entries`: Returns amount of used entries from a namespace.

nvs_iterator_t **nvs_entry_find**(**const** char **part_name*, **const** char **namespace_name*, *nvs_type_t type*)

Create an iterator to enumerate NVS entries based on one or more parameters.

```
// Example of listing all the key-value pairs of any type under specified␣
↪partition and namespace
nvs_iterator_t it = nvs_entry_find(partition, namespace, NVS_TYPE_ANY);
while (it != NULL) {
        nvs_entry_info_t info;
        nvs_entry_info(it, &info);
        it = nvs_entry_next(it);
        printf("key '%s', type '%d' \n", info.key, info.type);
};
// Note: no need to release iterator obtained from nvs_entry_find function when
//       nvs_entry_find or nvs_entry_next function return NULL, indicating no␣
↪other
//       element for specified criteria was found.
}
```

Return Iterator used to enumerate all the entries found, or NULL if no entry satisfying criteria was found. Iterator obtained through this function has to be released using nvs_release_iterator when not used any more.

Parameters

- `[in] part_name`: Partition name
- `[in] namespace_name`: Set this value if looking for entries with a specific namespace. Pass

NULL otherwise.
- `[in] type`: One of nvs_type_t values.

nvs_iterator_t **nvs_entry_next** (*nvs_iterator_t iterator*)
Returns next item matching the iterator criteria, NULL if no such item exists.

Note that any copies of the iterator will be invalid after this call.

Return NULL if no entry was found, valid nvs_iterator_t otherwise.
Parameters
- `[in] iterator`: Iterator obtained from nvs_entry_find function. Must be non-NULL.

void **nvs_entry_info** (*nvs_iterator_t iterator*, *nvs_entry_info_t *out_info*)
Fills *nvs_entry_info_t* structure with information about entry pointed to by the iterator.

Parameters
- `[in] iterator`: Iterator obtained from nvs_entry_find or nvs_entry_next function. Must be non-NULL.
- `[out] out_info`: Structure to which entry information is copied.

void **nvs_release_iterator** (*nvs_iterator_t iterator*)
Release iterator.

Parameters
- `[in] iterator`: Release iterator obtained from nvs_entry_find function. NULL argument is allowed.

Structures

struct nvs_entry_info_t
information about entry obtained from nvs_entry_info function

Public Members

char **namespace_name**[16]
Namespace to which key-value belong

char **key**[**NVS_KEY_NAME_MAX_SIZE**]
Key of stored key-value pair

nvs_type_t **type**
Type of stored key-value pair

struct nvs_stats_t

Note Info about storage space NVS.

Public Members

size_t **used_entries**
Amount of used entries.

size_t **free_entries**
Amount of free entries.

size_t **total_entries**
Amount all available entries.

size_t **namespace_count**
Amount name space.

Macros

ESP_ERR_NVS_BASE
Starting number of error codes

ESP_ERR_NVS_NOT_INITIALIZED
The storage driver is not initialized

ESP_ERR_NVS_NOT_FOUND
Id namespace doesn't exist yet and mode is NVS_READONLY

ESP_ERR_NVS_TYPE_MISMATCH
The type of set or get operation doesn't match the type of value stored in NVS

ESP_ERR_NVS_READ_ONLY
Storage handle was opened as read only

ESP_ERR_NVS_NOT_ENOUGH_SPACE
There is not enough space in the underlying storage to save the value

ESP_ERR_NVS_INVALID_NAME
Namespace name doesn't satisfy constraints

ESP_ERR_NVS_INVALID_HANDLE
Handle has been closed or is NULL

ESP_ERR_NVS_REMOVE_FAILED
The value wasn't updated because flash write operation has failed. The value was written however, and update will be finished after re-initialization of nvs, provided that flash operation doesn't fail again.

ESP_ERR_NVS_KEY_TOO_LONG
Key name is too long

ESP_ERR_NVS_PAGE_FULL
Internal error; never returned by nvs API functions

ESP_ERR_NVS_INVALID_STATE
NVS is in an inconsistent state due to a previous error. Call nvs_flash_init and nvs_open again, then retry.

ESP_ERR_NVS_INVALID_LENGTH
String or blob length is not sufficient to store data

ESP_ERR_NVS_NO_FREE_PAGES
NVS partition doesn't contain any empty pages. This may happen if NVS partition was truncated. Erase the whole partition and call nvs_flash_init again.

ESP_ERR_NVS_VALUE_TOO_LONG
String or blob length is longer than supported by the implementation

ESP_ERR_NVS_PART_NOT_FOUND
Partition with specified name is not found in the partition table

ESP_ERR_NVS_NEW_VERSION_FOUND
NVS partition contains data in new format and cannot be recognized by this version of code

ESP_ERR_NVS_XTS_ENCR_FAILED
XTS encryption failed while writing NVS entry

ESP_ERR_NVS_XTS_DECR_FAILED
XTS decryption failed while reading NVS entry

ESP_ERR_NVS_XTS_CFG_FAILED
XTS configuration setting failed

ESP_ERR_NVS_XTS_CFG_NOT_FOUND
XTS configuration not found

ESP_ERR_NVS_ENCR_NOT_SUPPORTED
NVS encryption is not supported in this version

ESP_ERR_NVS_KEYS_NOT_INITIALIZED
NVS key partition is uninitialized

ESP_ERR_NVS_CORRUPT_KEY_PART
NVS key partition is corrupt

ESP_ERR_NVS_WRONG_ENCRYPTION
NVS partition is marked as encrypted with generic flash encryption. This is forbidden since the NVS encryption works differently.

ESP_ERR_NVS_CONTENT_DIFFERS
Internal error; never returned by nvs API functions. NVS key is different in comparison

NVS_DEFAULT_PART_NAME
Default partition name of the NVS partition in the partition table

NVS_PART_NAME_MAX_SIZE
maximum length of partition name (excluding null terminator)

NVS_KEY_NAME_MAX_SIZE
Maximal length of NVS key name (including null terminator)

Type Definitions

typedef uint32_t **nvs_handle_t**
Opaque pointer type representing non-volatile storage handle

typedef *nvs_handle_t* **nvs_handle**

typedef *nvs_open_mode_t* **nvs_open_mode**

typedef struct nvs_opaque_iterator_t ***nvs_iterator_t**
Opaque pointer type representing iterator to nvs entries

Enumerations

enum nvs_open_mode_t
Mode of opening the non-volatile storage.

Values:

NVS_READONLY
Read only

NVS_READWRITE
Read and write

enum nvs_type_t
Types of variables.

Values:

NVS_TYPE_U8 = 0x01
Type uint8_t

NVS_TYPE_I8 = 0x11
Type int8_t

NVS_TYPE_U16 = 0x02
Type uint16_t

NVS_TYPE_I16 = 0x12
Type int16_t

NVS_TYPE_U32 = 0x04
Type uint32_t

NVS_TYPE_I32 = 0x14
Type int32_t

NVS_TYPE_U64 = 0x08
Type uint64_t

NVS_TYPE_I64 = 0x18
Type int64_t

NVS_TYPE_STR = 0x21
Type string

NVS_TYPE_BLOB = 0x42
Type blob

NVS_TYPE_ANY = 0xff
Must be last

2.6.4 NVS 分区生成程序

介绍

NVS 分区生成程序 (nvs_flash/nvs_partition_generator/nvs_partition_gen.py) 根据 CSV 文件中的键值对生成二进制文件。该二进制文件与非易失性存储器 *(NVS)* 中定义的 NVS 结构兼容。NVS 分区生成程序适合用于生成二进制数据（Blob），其中包括设备生产时可从外部烧录的 ODM/OEM 数据。这也使得生产制造商在使用同一个固件的基础上，通过自定义参数，如序列号等，为每个设备生成不同配置。

准备工作

在加密模式下使用该程序，需安装下列软件包：

- cryptography package

根目录下的 *requirements.txt* 包含必需 python 包，请预先安装。

CSV 文件格式

.csv 文件每行需包含四个参数，以逗号隔开。具体参数描述见下表：

序号	参数	描述	说明
1	Key	主键，应用程序可通过查询此键来获取数据。	
2	Type	支持 `file`、`data` 和 `namespace`。	
3	Encoding	支持 `u8`、`i8`、`u16`、`u32`、`i32`、`string`、`hex2bin`、`base64` 和 `binary`。决定二进制 `bin` 文件中 value 被编码成的类型。`string` 和 `binary` 编码的区别在于，`string` 数据以 NULL 字符结尾，`binary` 数据则不是。	`file` 类型当前仅支持 `hex2bin`、`base64`、`string` 和 `binary` 编码。
4	Value	Data value	`namespace` 字段的 `encoding` 和 `value` 应为空。`namespace` 的 `encoding` 和 `value` 为固定值，不可设置。这些单元格中的所有值都会被忽视。

注解： CSV 文件的第一行应为列标题，不可设置。

此类 CSV 文件的 Dump 示例如下：

```
key,type,encoding,value      <-- 列标题
namespace_name,namespace,,   <-- 第一个条目为 "namespace"
key1,data,u8,1
key2,file,string,/path/to/file
```

注解:

请确保:

- 逗号‘,’前后无空格;
- CSV 文件每行末尾无空格。

NVS 条目和命名空间 (namespace)

如 CSV 文件中出现命名空间条目，后续条目均会被视为该命名空间的一部分，直至找到下一个命名空间条目。找到新命名空间条目后，后续所有条目都会被视为新命名空间的一部分。

注解: CSV 文件中第一个条目应始终为 `namespace`。

支持多页 Blob

默认情况下，二进制 Blob 可跨多页，格式参考条目结构 章节。如需使用旧版格式，可在程序中禁用该功能。

支持加密

NVS 分区生成程序还可使用 AES-XTS 加密生成二进制加密文件。更多信息详见*NVS 加密*。

支持解密

如果 NVS 二进制文件采用了 AES-XTS 加密，该程序还可对此类文件进行解密，更多信息详见*NVS 加密*。

运行程序

使用方法:

```
python nvs_partition_gen.py [-h] {generate,generate-key,encrypt,decrypt} ...
```

可选参数:

序号	参数	描述
1	-h, –help	显示帮助信息并退出

命令:

```
运行 nvs_partition_gen.py {command} -h 查看更多帮助信息
```

序号	参数	描述
1	generate	生成 NVS 分区
2	generate-key	生成加密密钥
3	encrypt	加密 NVS 分区
4	decrypt	解密 NVS 分区

生成 NVS 分区（默认模式）

使用方法:

```
python nvs_partition_gen.py generate [-h] [--version {1,2}] [--outdir OUTDIR]
                                     input output size
```

位置参数:

参数	描述
input	待解析的 CSV 文件路径
output	NVS 二进制文件的输出路径
size	NVS 分区大小（以字节为单位，且为 4096 的整数倍）

可选参数:

参数	描述
-h, –help	显示帮助信息并退出
–version {1,2}	• 设置多页 Blob 版本。 • 版本 1：禁用多页 Blob； • 版本 2：启用多页 Blob； • 默认版本：版本 2。
–outdir OUTDIR	输出目录，用于存储创建的文件。（默认当前目录）

运行如下命令创建 NVS 分区，该程序同时会提供 CSV 示例文件:

```
python nvs_partition_gen.py generate sample_singlepage_blob.csv sample.bin 0x3000
```

仅生成加密密钥

使用方法:

```
python nvs_partition_gen.py generate-key [-h] [--keyfile KEYFILE]
                                         [--outdir OUTDIR]
```

可选参数:

参数	描述
-h, –help	显示帮助信息并退出
–keyfile KEYFILE	加密密钥文件的输出路径
–outdir OUTDIR	输出目录，用于存储创建的文件。（默认当前目录）

运行以下命令仅生成加密密钥:

```
python nvs_partition_gen.py generate-key
```

生成 NVS 加密分区　使用方法:

```
python nvs_partition_gen.py encrypt [-h] [--version {1,2}] [--keygen]
                                    [--keyfile KEYFILE] [--inputkey INPUTKEY]
                                    [--outdir OUTDIR]
                                    input output size
```

位置参数:

参数	描述
input	待解析 CSV 文件的路径
output	NVS 二进制文件的输出路径
size	NVS 分区大小（以字节为单位，且为 4096 的整数倍）

可选参数:

参数	描述
-h, –help	显示帮助信息并退出
–version {1,2}	• 设置多页 Blob 版本。 • 版本 1：禁用多页 Blob； • 版本 2：启用多页 Blob； • 默认版本：版本 2。
–keygen	生成 NVS 分区加密密钥
–keyfile KEYFILE	密钥文件的输出路径
–inputkey INPUTKEY	内含 NVS 分区加密密钥的文件
–outdir OUTDIR	输出目录，用于存储创建的文件（默认当前目录）

运行以下命令加密 NVS 分区，该程序同时会提供一个 CSV 示例文件。

- 通过 NVS 分区生成程序生成加密密钥来加密:

```
python nvs_partition_gen.py encrypt sample_singlepage_blob.csv sample_encr.bin␣
↪0x3000 --keygen
```

注解: 创建的加密密钥格式为 `<outdir>/keys/keys-<timestamp>.bin`。

- 通过 NVS 分区生成程序生成加密密钥，并将密钥存储于自定义的文件中:

```
python nvs_partition_gen.py encrypt sample_singlepage_blob.csv sample_encr.bin␣
↪0x3000 --keygen --keyfile sample_keys.bin
```

注解: 创建的加密密钥格式为 `<outdir>/keys/keys-<timestamp>.bin`。

注解: 加密密钥存储于新建文件的 `keys/` 目录下，与 NVS 密钥分区结构兼容。更多信息请参考*NVS 密钥分区*。

- 将加密密钥用作二进制输入文件来进行加密:

```
python nvs_partition_gen.py encrypt sample_singlepage_blob.csv sample_encr.bin␣
↪0x3000 --inputkey sample_keys.bin
```

解密 NVS 分区　使用方法:

```
python nvs_partition_gen.py decrypt [-h] [--outdir OUTDIR] input key output
```

位置参数:

参数	描述
input	待解析的 NVS 加密分区文件路径
key	含有解密密钥的文件路径
output	已解密的二进制文件输出路径

可选参数:

参数	描述
-h, –help	显示帮助信息并退出
–outdir OUTDIR	输出目录，用于存储创建的文件（默认当前目录）

运行以下命令解密已加密的 NVS 分区:

```
python nvs_partition_gen.py decrypt sample_encr.bin sample_keys.bin sample_decr.bin
```

您可以自定义格式版本号:

- 版本 1：禁用多页 Blob
- 版本 2：启用多页 Blob

版本 1：禁用多页 Blob 如需禁用多页 Blob，请按照如下命令将版本参数设置为 1，以此格式运行分区生成程序。该程序同时会提供一个 CSV 示例文件:

```
python nvs_partition_gen.py generate sample_singlepage_blob.csv sample.bin 0x3000 --
↪version 1
```

版本 2：启用多页 Blob 如需启用多页 Blob，请按照如下命令将版本参数设置为 2，以此格式运行分区生成程序。该程序同时会提供一个 CSV 示例文件:

```
python nvs_partition_gen.py generate sample_multipage_blob.csv sample.bin 0x4000 --
↪version 2
```

注解: NVS 分区最小为 0x3000 字节。

注解: 将二进制文件烧录至设备时，请确保与应用的 sdkconfig 设置一致。

说明

- 分区生成程序不会对重复键进行检查，而将数据同时写入这两个重复键中。请注意不要使用同名的键;
- 新页面创建后，前一页的空白处不会再写入数据。CSV 文件中的字段须按次序排列以优化内存;
- 暂不支持 64 位数据类型。

2.6.5 虚拟文件系统组件

概述

虚拟文件系统 (VFS) 组件可为一些驱动提供一个统一接口。有了该接口，用户可像操作普通文件一样操作虚拟文件。这类驱动程序可以是 FAT、SPIFFS 等真实文件系统，也可以是有文件类接口的设备驱动程序。

VFS 组件支持 C 库函数（如 fopen 和 fprintf 等）与文件系统 (FS) 驱动程序协同工作。在高层级，每个 FS 驱动程序均与某些路径前缀相关联。当一个 C 库函数需要打开文件时，VFS 组件将搜索与该文件所在文件路径相关联的 FS 驱动程序，并将调用传递给该驱动程序。针对该文件的读取、写入等其他操作的调用也将传递给这个驱动程序。

例如，您可以使用 `/fat` 前缀注册 FAT 文件系统驱动，之后即可调用 `fopen("/fat/file.txt", "w")`。之后，VFS 将调用 FAT 驱动的 `open` 函数，并将参数 `/file.txt` 和合适的打开模式传递给 `open` 函数；后续对返回的 `FILE*` 数据流调用 C 库函数也同样会传递给 FAT 驱动。

注册 FS 驱动程序

如需注册 FS 驱动程序，首先要定义一个*esp_vfs_t* 结构体实例，并用指向 FS API 的函数指针填充它。

```
esp_vfs_t myfs = {
    .flags = ESP_VFS_FLAG_DEFAULT,
    .write = &myfs_write,
    .open = &myfs_open,
    .fstat = &myfs_fstat,
    .close = &myfs_close,
    .read = &myfs_read,
};

ESP_ERROR_CHECK(esp_vfs_register("/data", &myfs, NULL));
```

在上述代码中需要用到 `read`、`write` 或 `read_p`、`write_p`，具体使用哪组函数由 FS 驱动程序 API 的声明方式决定。

示例 1：声明 API 函数时不带额外的上下文指针参数，即 FS 驱动程序为单例模式，此时使用 `write`

```
ssize_t myfs_write(int fd, const void * data, size_t size);

// In definition of esp_vfs_t:
    .flags = ESP_VFS_FLAG_DEFAULT,
    .write = &myfs_write,
// ... other members initialized

// When registering FS, context pointer (third argument) is NULL:
ESP_ERROR_CHECK(esp_vfs_register("/data", &myfs, NULL));
```

示例 2：声明 API 函数时需要一个额外的上下文指针作为参数，即可支持多个 FS 驱动程序实例，此时使用 `write_p`

```
ssize_t myfs_write(myfs_t* fs, int fd, const void * data, size_t size);

// In definition of esp_vfs_t:
    .flags = ESP_VFS_FLAG_CONTEXT_PTR,
    .write_p = &myfs_write,
// ... other members initialized

// When registering FS, pass the FS context pointer into the third argument
// (hypothetical myfs_mount function is used for illustrative purposes)
myfs_t* myfs_inst1 = myfs_mount(partition1->offset, partition1->size);
ESP_ERROR_CHECK(esp_vfs_register("/data1", &myfs, myfs_inst1));

// Can register another instance:
myfs_t* myfs_inst2 = myfs_mount(partition2->offset, partition2->size);
ESP_ERROR_CHECK(esp_vfs_register("/data2", &myfs, myfs_inst2));
```

同步输入/输出多路复用 如需通过 `select()` 使用同步输入/输出多路复用，首先需要把 `start_select()` 和 `end_select()` 注册到 VFS，如下所示：

```
// In definition of esp_vfs_t:
    .start_select = &uart_start_select,
    .end_select = &uart_end_select,
// ... other members initialized
```

调用 start_select() 设置环境，用以检测某一 VFS 文件描述符的读取/写入/错误条件。调用 end_select() 终止、析构或释放 start_select() 设置的资源。请在 vfs/vfs_uart.c 中查看 UART 外设参考实现、*esp_vfs_dev_uart_register()*、uart_start_select() 和 uart_end_select() 函数。

请参考以下示例，查看如何使用 VFS 文件描述符调用 select()：

- peripherals/uart/uart_select
- system/select

如果 select() 用于套接字文件描述符，您可以启用 CONFIG_LWIP_USE_ONLY_LWIP_SELECT 选项来减少代码量，提高性能。

路径

已注册的 FS 驱动程序均有一个路径前缀与之关联，此路径前缀即为分区的挂载点。

如果挂载点中嵌套了其他挂载点，则在打开文件时使用具有最长匹配路径前缀的挂载点。例如，假设以下文件系统已在 VFS 中注册：

- 在 /data 下注册 FS 驱动程序 1
- 在 /data/static 下注册 FS 驱动程序 2

那么：

- 打开 /data/log.txt 会调用驱动程序 FS 1；
- 打开 /data/static/index.html 需调用 FS 驱动程序 2；
- 即便 FS 驱动程序 2 中没有 /index.html，也不会在 FS 驱动程序 1 中查找 /static/index.html。

挂载点名称必须以路径分隔符 (/) 开头，且分隔符后至少包含一个字符。但在以下情况中，VFS 同样支持空的挂载点名称：1. 应用程序需要提供一个”最后方案“下使用的文件系统；2. 应用程序需要同时覆盖 VFS 功能。如果没有与路径匹配的前缀，就会使用到这种文件系统。

VFS 不会对路径中的点 (.) 进行特殊处理，也不会将 .. 视为对父目录的引用。在上述示例中，使用 /data/static/../log.txt 路径不会调用 FS 驱动程序 1 打开 /log.txt。特定的 FS 驱动程序（如 FATFS）可能以不同的方式处理文件名中的点。

执行打开文件操作时，FS 驱动程序仅得到文件的相对路径（挂载点前缀已经被去除）：

1. 以 /data 为路径前缀注册 myfs 驱动；
2. 应用程序调用 fopen("/data/config.json", ...)；
3. VFS 调用 myfs_open("/config.json", ...)；
4. myfs 驱动打开 /config.json 文件。

VFS 对文件路径长度没有限制，但文件系统路径前缀受 ESP_VFS_PATH_MAX 限制，即路径前缀上限为 ESP_VFS_PATH_MAX。各个文件系统驱动则可能会对自己的文件名长度设置一些限制。

文件描述符

文件描述符是一组很小的正整数，从 0 到 FD_SETSIZE - 1，FD_SETSIZE 在 newlib sys/types.h 中定义。最大文件描述符由 CONFIG_LWIP_MAX_SOCKETS 定义，且为套接字保留。VFS 中包含一个名为 s_fd_table 的查找表，用于将全局文件描述符映射至 s_vfs 数组中注册的 VFS 驱动索引。

标准 IO 流 (stdin, stdout, stderr)

如果 menuconfig 中 `UART for console output` 选项没有设置为 `None`，则 `stdin`、`stdout` 和 `stderr` 将默认从 UART 读取或写入。UART0 或 UART1 可用作标准 IO。默认情况下，UART0 使用 115200 波特率，TX 管脚为 GPIO1，RX 管脚为 GPIO3。您可以在 menuconfig 中更改上述参数。

对 `stdout` 或 `stderr` 执行写入操作将会向 UART 发送 FIFO 发送字符，对 `stdin` 执行读取操作则会从 UART 接收 FIFO 中取出字符。

默认情况下，VFS 使用简单的函数对 UART 进行读写操作。在所有数据放进 UART FIFO 之前，写操作将处于 busy-wait 状态，读操处于非阻塞状态，仅返回 FIFO 中已有数据。由于读操作为非阻塞，高层级 C 库函数调用（如 `fscanf("%d\n", &var);`）可能获取不到所需结果。

如果应用程序使用 UART 驱动，则可以调用 `esp_vfs_dev_uart_use_driver` 函数来指导 VFS 使用驱动中断、读写阻塞功能等。您也可以调用 `esp_vfs_dev_uart_use_nonblocking` 来恢复非阻塞函数。

VFS 还为输入和输出提供换行符转换功能（可选）。多数应用程序在程序内部发送或接收以 LF（'\n'）结尾的行，但不同的终端程序可能需要不同的换行符，比如 CR 或 CRLF。应用程序可以通过 menuconfig 或者调用 `esp_vfs_dev_uart_port_set_rx_line_endings` 和 `esp_vfs_dev_uart_port_set_tx_line_endings` 为输入输出配置换行符。

标准流和 FreeRTOS 任务 `stdin`、`stdout` 和 `stderr` 的 `FILE` 对象在所有 FreeRTOS 任务之间共享，指向这些对象的指针分别存储在每个任务的 `struct _reent` 中。

预处理器把如下代码：

```
fprintf(stderr, "42\n");
```

解释为：

```
fprintf(__getreent()->_stderr, "42\n");
```

其中 `__getreent()` 函数将为每个任务返回一个指向 `struct _reent` 的指针。每个任务的 TCB 均拥有一个 `struct _reent` 结构体，任务初始化后，`struct _reent` 结构体中的 `_stdin`、`_stdout` 和 `_stderr` 将会被赋予 `_GLOBAL_REENT` 中 `_stdin`、`_stdout` 和 `_stderr` 的值，`_GLOBAL_REENT` 即为 FreeRTOS 启动之前所用结构体。

这样设计带来的结果是：

- 允许重定向给定任务的 `stdin`、`stdout` 和 `stderr`，而不影响其他任务，例如通过 `stdin = fopen("/dev/uart/1", "r");`
- 但使用 `fclose` 关闭默认 `stdin`、`stdout` 或 `stderr` 将同时关闭相应的 `FILE` 流对象，因此会影响其他任务；
- 如需更改新任务的默认 `stdin`、`stdout` 和 `stderr` 流，请在创建新任务之前修改 `_GLOBAL_REENT->_stdin`（`_stdout`、`_stderr`）。

API 参考

Header File

- vfs/include/esp_vfs.h

Functions

ssize_t **esp_vfs_write**(**struct** _reent *r, int *fd*, **const** void *data, size_t *size*)

These functions are to be used in newlib syscall table. They will be called by newlib when it needs to use any of the syscalls.

off_t **esp_vfs_lseek**(**struct** _reent *r, int *fd*, off_t *size*, int *mode*)

ssize_t **esp_vfs_read**(**struct** _reent *r, int *fd*, void *dst, size_t *size*)

int **esp_vfs_open**(**struct** _reent *r, **const** char *path, int flags, int mode)

int **esp_vfs_close**(**struct** _reent *r, int fd)

int **esp_vfs_fstat**(**struct** _reent *r, int fd, **struct** stat *st)

int **esp_vfs_stat**(**struct** _reent *r, **const** char *path, **struct** stat *st)

int **esp_vfs_link**(**struct** _reent *r, **const** char *n1, **const** char *n2)

int **esp_vfs_unlink**(**struct** _reent *r, **const** char *path)

int **esp_vfs_rename**(**struct** _reent *r, **const** char *src, **const** char *dst)

int **esp_vfs_utime**(**const** char *path, **const struct** utimbuf *times)

esp_err_t **esp_vfs_register**(**const** char *base_path, **const** *esp_vfs_t* *vfs, void *ctx)

Register a virtual filesystem for given path prefix.

Return ESP_OK if successful, ESP_ERR_NO_MEM if too many VFSes are registered.

Parameters

- `base_path`: file path prefix associated with the filesystem. Must be a zero-terminated C string, may be empty. If not empty, must be up to ESP_VFS_PATH_MAX characters long, and at least 2 characters long. Name must start with a "/" and must not end with "/". For example, "/data" or "/dev/spi" are valid. These VFSes would then be called to handle file paths such as "/data/myfile.txt" or "/dev/spi/0". In the special case of an empty base_path, a "fallback" VFS is registered. Such VFS will handle paths which are not matched by any other registered VFS.
- `vfs`: Pointer to *esp_vfs_t*, a structure which maps syscalls to the filesystem driver functions. VFS component doesn't assume ownership of this pointer.
- `ctx`: If vfs->flags has ESP_VFS_FLAG_CONTEXT_PTR set, a pointer which should be passed to VFS functions. Otherwise, NULL.

esp_err_t **esp_vfs_register_fd_range**(**const** *esp_vfs_t* *vfs, void *ctx, int min_fd, int max_fd)

Special case function for registering a VFS that uses a method other than open() to open new file descriptors from the interval <min_fd; max_fd).

This is a special-purpose function intended for registering LWIP sockets to VFS.

Return ESP_OK if successful, ESP_ERR_NO_MEM if too many VFSes are registered, ESP_ERR_INVALID_ARG if the file descriptor boundaries are incorrect.

Parameters

- `vfs`: Pointer to *esp_vfs_t*. Meaning is the same as for esp_vfs_register().
- `ctx`: Pointer to context structure. Meaning is the same as for esp_vfs_register().
- `min_fd`: The smallest file descriptor this VFS will use.
- `max_fd`: Upper boundary for file descriptors this VFS will use (the biggest file descriptor plus one).

esp_err_t **esp_vfs_register_with_id**(**const** *esp_vfs_t* *vfs, void *ctx, *esp_vfs_id_t* *vfs_id)

Special case function for registering a VFS that uses a method other than open() to open new file descriptors. In comparison with esp_vfs_register_fd_range, this function doesn't pre-registers an interval of file descriptors. File descriptors can be registered later, by using esp_vfs_register_fd.

Return ESP_OK if successful, ESP_ERR_NO_MEM if too many VFSes are registered, ESP_ERR_INVALID_ARG if the file descriptor boundaries are incorrect.

Parameters

- `vfs`: Pointer to *esp_vfs_t*. Meaning is the same as for esp_vfs_register().
- `ctx`: Pointer to context structure. Meaning is the same as for esp_vfs_register().
- `vfs_id`: Here will be written the VFS ID which can be passed to esp_vfs_register_fd for registering file descriptors.

esp_err_t **esp_vfs_unregister**(**const** char *base_path)

Unregister a virtual filesystem for given path prefix

Return ESP_OK if successful, ESP_ERR_INVALID_STATE if VFS for given prefix hasn't been registered

Parameters

- `base_path`: file prefix previously used in esp_vfs_register call

esp_err_t **esp_vfs_register_fd**(*esp_vfs_id_t vfs_id*, int **fd*)

Special function for registering another file descriptor for a VFS registered by esp_vfs_register_with_id.

Return ESP_OK if the registration is successful, ESP_ERR_NO_MEM if too many file descriptors are registered, ESP_ERR_INVALID_ARG if the arguments are incorrect.

Parameters

- `vfs_id`: VFS identificator returned by esp_vfs_register_with_id.
- `fd`: The registered file descriptor will be written to this address.

esp_err_t **esp_vfs_unregister_fd**(*esp_vfs_id_t vfs_id*, int *fd*)

Special function for unregistering a file descriptor belonging to a VFS registered by esp_vfs_register_with_id.

Return ESP_OK if the registration is successful, ESP_ERR_INVALID_ARG if the arguments are incorrect.

Parameters

- `vfs_id`: VFS identificator returned by esp_vfs_register_with_id.
- `fd`: File descriptor which should be unregistered.

int **esp_vfs_select**(int *nfds*, fd_set **readfds*, fd_set **writefds*, fd_set **errorfds*, **struct** timeval **timeout*)

Synchronous I/O multiplexing which implements the functionality of POSIX select() for VFS.

Return The number of descriptors set in the descriptor sets, or -1 when an error (specified by errno) have occurred.

Parameters

- `nfds`: Specifies the range of descriptors which should be checked. The first nfds descriptors will be checked in each set.
- `readfds`: If not NULL, then points to a descriptor set that on input specifies which descriptors should be checked for being ready to read, and on output indicates which descriptors are ready to read.
- `writefds`: If not NULL, then points to a descriptor set that on input specifies which descriptors should be checked for being ready to write, and on output indicates which descriptors are ready to write.
- `errorfds`: If not NULL, then points to a descriptor set that on input specifies which descriptors should be checked for error conditions, and on output indicates which descriptors have error conditions.
- `timeout`: If not NULL, then points to timeval structure which specifies the time period after which the functions should time-out and return. If it is NULL, then the function will not time-out. Note that the timeout period is rounded up to the system tick and incremented by one.

void **esp_vfs_select_triggered**(*esp_vfs_select_sem_t sem*)

Notification from a VFS driver about a read/write/error condition.

This function is called when the VFS driver detects a read/write/error condition as it was requested by the previous call to start_select.

Parameters

- `sem`: semaphore structure which was passed to the driver by the start_select call

void **esp_vfs_select_triggered_isr**(*esp_vfs_select_sem_t sem*, BaseType_t **woken*)

Notification from a VFS driver about a read/write/error condition (ISR version)

This function is called when the VFS driver detects a read/write/error condition as it was requested by the previous call to start_select.

Parameters

- `sem`: semaphore structure which was passed to the driver by the start_select call
- `woken`: is set to pdTRUE if the function wakes up a task with higher priority

ssize_t **esp_vfs_pread**(int *fd*, void **dst*, size_t *size*, off_t *offset*)

Implements the VFS layer of POSIX pread()

Return A positive return value indicates the number of bytes read. -1 is return on failure and errno is set accordingly.

Parameters

- `fd`: File descriptor used for read

- `dst`: Pointer to the buffer where the output will be written
- `size`: Number of bytes to be read
- `offset`: Starting offset of the read

ssize_t **esp_vfs_pwrite**(int *fd*, **const** void **src*, size_t *size*, off_t *offset*)

Implements the VFS layer of POSIX pwrite()

Return A positive return value indicates the number of bytes written. -1 is return on failure and errno is set accordingly.

Parameters

- `fd`: File descriptor used for write
- `src`: Pointer to the buffer from where the output will be read
- `size`: Number of bytes to write
- `offset`: Starting offset of the write

Structures

struct esp_vfs_select_sem_t

VFS semaphore type for select()

Public Members

bool **is_sem_local**

type of "sem" is SemaphoreHandle_t when true, defined by socket driver otherwise

void ***sem**

semaphore instance

struct esp_vfs_t

VFS definition structure.

This structure should be filled with pointers to corresponding FS driver functions.

VFS component will translate all FDs so that the filesystem implementation sees them starting at zero. The caller sees a global FD which is prefixed with an pre-filesystem-implementation.

Some FS implementations expect some state (e.g. pointer to some structure) to be passed in as a first argument. For these implementations, populate the members of this structure which have _p suffix, set flags member to ESP_VFS_FLAG_CONTEXT_PTR and provide the context pointer to esp_vfs_register function. If the implementation doesn't use this extra argument, populate the members without _p suffix and set flags member to ESP_VFS_FLAG_DEFAULT.

If the FS driver doesn't provide some of the functions, set corresponding members to NULL.

Public Members

int **flags**

ESP_VFS_FLAG_CONTEXT_PTR or ESP_VFS_FLAG_DEFAULT

ssize_t (***write_p**)(void *p, int fd, **const** void *data, size_t size)

Write with context pointer

ssize_t (***write**)(int fd, **const** void *data, size_t size)

Write without context pointer

off_t (***lseek_p**)(void *p, int fd, off_t size, int mode)

Seek with context pointer

off_t (***lseek**)(int fd, off_t size, int mode)

Seek without context pointer

ssize_t (***read_p**)(void *ctx, int fd, void *dst, size_t size)

Read with context pointer

ssize_t (***read**) (int fd, void *dst, size_t size)
Read without context pointer

ssize_t (***pread_p**) (void *ctx, int fd, void *dst, size_t size, off_t offset)
pread with context pointer

ssize_t (***pread**) (int fd, void *dst, size_t size, off_t offset)
pread without context pointer

ssize_t (***pwrite_p**) (void *ctx, int fd, **const** void *src, size_t size, off_t offset)
pwrite with context pointer

ssize_t (***pwrite**) (int fd, **const** void *src, size_t size, off_t offset)
pwrite without context pointer

int (***open_p**) (void *ctx, **const** char *path, int flags, int mode)
open with context pointer

int (***open**) (**const** char *path, int flags, int mode)
open without context pointer

int (***close_p**) (void *ctx, int fd)
close with context pointer

int (***close**) (int fd)
close without context pointer

int (***fstat_p**) (void *ctx, int fd, **struct** *stat* *st)
fstat with context pointer

int (***fstat**) (int fd, **struct** *stat* *st)
fstat without context pointer

int (***stat_p**) (void *ctx, **const** char *path, **struct** *stat* *st)
stat with context pointer

int (***stat**) (**const** char *path, **struct** *stat* *st)
stat without context pointer

int (***link_p**) (void *ctx, **const** char *n1, **const** char *n2)
link with context pointer

int (***link**) (**const** char *n1, **const** char *n2)
link without context pointer

int (***unlink_p**) (void *ctx, **const** char *path)
unlink with context pointer

int (***unlink**) (**const** char *path)
unlink without context pointer

int (***rename_p**) (void *ctx, **const** char *src, **const** char *dst)
rename with context pointer

int (***rename**) (**const** char *src, **const** char *dst)
rename without context pointer

DIR *(***opendir_p**) (void *ctx, **const** char *name)
opendir with context pointer

DIR *(***opendir**) (**const** char *name)
opendir without context pointer

struct dirent *(***readdir_p**) (void *ctx, DIR *pdir)
readdir with context pointer

struct dirent *(***readdir**) (DIR *pdir)
readdir without context pointer

int (*`readdir_r_p`) (void *ctx, DIR *pdir, `struct` dirent *entry, `struct` dirent **out_dirent)
readdir_r with context pointer

int (*`readdir_r`) (DIR *pdir, `struct` dirent *entry, `struct` dirent **out_dirent)
readdir_r without context pointer

long (*`telldir_p`) (void *ctx, DIR *pdir)
telldir with context pointer

long (*`telldir`) (DIR *pdir)
telldir without context pointer

void (*`seekdir_p`) (void *ctx, DIR *pdir, long offset)
seekdir with context pointer

void (*`seekdir`) (DIR *pdir, long offset)
seekdir without context pointer

int (*`closedir_p`) (void *ctx, DIR *pdir)
closedir with context pointer

int (*`closedir`) (DIR *pdir)
closedir without context pointer

int (*`mkdir_p`) (void *ctx, `const` char *name, mode_t mode)
mkdir with context pointer

int (*`mkdir`) (`const` char *name, mode_t mode)
mkdir without context pointer

int (*`rmdir_p`) (void *ctx, `const` char *name)
rmdir with context pointer

int (*`rmdir`) (`const` char *name)
rmdir without context pointer

int (*`fcntl_p`) (void *ctx, int fd, int cmd, int arg)
fcntl with context pointer

int (*`fcntl`) (int fd, int cmd, int arg)
fcntl without context pointer

int (*`ioctl_p`) (void *ctx, int fd, int cmd, va_list args)
ioctl with context pointer

int (*`ioctl`) (int fd, int cmd, va_list args)
ioctl without context pointer

int (*`fsync_p`) (void *ctx, int fd)
fsync with context pointer

int (*`fsync`) (int fd)
fsync without context pointer

int (*`access_p`) (void *ctx, `const` char *path, int amode)
access with context pointer

int (*`access`) (`const` char *path, int amode)
access without context pointer

int (*`truncate_p`) (void *ctx, `const` char *path, off_t length)
truncate with context pointer

int (*`truncate`) (`const` char *path, off_t length)
truncate without context pointer

int (*`utime_p`) (void *ctx, `const` char *path, `const struct` utimbuf *times)
utime with context pointer

int (***utime**) (**const** char *path, **const struct** utimbuf *times)
utime without context pointer

int (***tcsetattr_p**) (void *ctx, int fd, int optional_actions, **const struct** termios *p)
tcsetattr with context pointer

int (***tcsetattr**) (int fd, int optional_actions, **const struct** termios *p)
tcsetattr without context pointer

int (***tcgetattr_p**) (void *ctx, int fd, **struct** termios *p)
tcgetattr with context pointer

int (***tcgetattr**) (int fd, **struct** termios *p)
tcgetattr without context pointer

int (***tcdrain_p**) (void *ctx, int fd)
tcdrain with context pointer

int (***tcdrain**) (int fd)
tcdrain without context pointer

int (***tcflush_p**) (void *ctx, int fd, int select)
tcflush with context pointer

int (***tcflush**) (int fd, int select)
tcflush without context pointer

int (***tcflow_p**) (void *ctx, int fd, int action)
tcflow with context pointer

int (***tcflow**) (int fd, int action)
tcflow without context pointer

pid_t (***tcgetsid_p**) (void *ctx, int fd)
tcgetsid with context pointer

pid_t (***tcgetsid**) (int fd)
tcgetsid without context pointer

int (***tcsendbreak_p**) (void *ctx, int fd, int duration)
tcsendbreak with context pointer

int (***tcsendbreak**) (int fd, int duration)
tcsendbreak without context pointer

esp_err_t (***start_select**) (int nfds, fd_set *readfds, fd_set *writefds, fd_set *exceptfds, *esp_vfs_select_sem_t* sem, void **end_select_args)
start_select is called for setting up synchronous I/O multiplexing of the desired file descriptors in the given VFS

int (***socket_select**) (int nfds, fd_set *readfds, fd_set *writefds, fd_set *errorfds, **struct** timeval *timeout)
socket select function for socket FDs with the functionality of POSIX select(); this should be set only for the socket VFS

void (***stop_socket_select**) (void *sem)
called by VFS to interrupt the socket_select call when select is activated from a non-socket VFS driver; set only for the socket driver

void (***stop_socket_select_isr**) (void *sem, BaseType_t *woken)
stop_socket_select which can be called from ISR; set only for the socket driver

void *(***get_socket_select_semaphore**) (void)
end_select is called to stop the I/O multiplexing and deinitialize the environment created by start_select for the given VFS

esp_err_t (***end_select**) (void *end_select_args)
get_socket_select_semaphore returns semaphore allocated in the socket driver; set only for the socket driver

Macros

MAX_FDS
Maximum number of (global) file descriptors.

ESP_VFS_PATH_MAX
Maximum length of path prefix (not including zero terminator)

ESP_VFS_FLAG_DEFAULT
Default value of flags member in *esp_vfs_t* structure.

ESP_VFS_FLAG_CONTEXT_PTR
Flag which indicates that FS needs extra context pointer in syscalls.

Type Definitions

typedef int **esp_vfs_id_t**

Header File

- vfs/include/esp_vfs_dev.h

Functions

void **esp_vfs_dev_uart_register** (void)
add /dev/uart virtual filesystem driver

This function is called from startup code to enable serial output

void **esp_vfs_dev_uart_set_rx_line_endings** (esp_line_endings_t *mode*)
Set the line endings expected to be received on UART.

This specifies the conversion between line endings received on UART and newlines ('' , LF) passed into stdin:

- ESP_LINE_ENDINGS_CRLF: convert CRLF to LF
- ESP_LINE_ENDINGS_CR: convert CR to LF
- ESP_LINE_ENDINGS_LF: no modification

Note this function is not thread safe w.r.t. reading from UART
Parameters
- `mode`: line endings expected on UART

void **esp_vfs_dev_uart_set_tx_line_endings** (esp_line_endings_t *mode*)
Set the line endings to sent to UART.

This specifies the conversion between newlines ('' , LF) on stdout and line endings sent over UART:

- ESP_LINE_ENDINGS_CRLF: convert LF to CRLF
- ESP_LINE_ENDINGS_CR: convert LF to CR
- ESP_LINE_ENDINGS_LF: no modification

Note this function is not thread safe w.r.t. writing to UART
Parameters
- `mode`: line endings to send to UART

int **esp_vfs_dev_uart_port_set_rx_line_endings** (int *uart_num*, esp_line_endings_t *mode*)
Set the line endings expected to be received on specified UART.

This specifies the conversion between line endings received on UART and newlines ('' , LF) passed into stdin:

- ESP_LINE_ENDINGS_CRLF: convert CRLF to LF

- ESP_LINE_ENDINGS_CR: convert CR to LF
- ESP_LINE_ENDINGS_LF: no modification

Note this function is not thread safe w.r.t. reading from UART
Return 0 if successed, or -1 when an error (specified by errno) have occurred.
Parameters
- `uart_num`: the UART number
- `mode`: line endings to send to UART

int **esp_vfs_dev_uart_port_set_tx_line_endings**(int *uart_num*, esp_line_endings_t *mode*)
Set the line endings to sent to specified UART.

This specifies the conversion between newlines (‘’ , LF) on stdout and line endings sent over UART:

- ESP_LINE_ENDINGS_CRLF: convert LF to CRLF
- ESP_LINE_ENDINGS_CR: convert LF to CR
- ESP_LINE_ENDINGS_LF: no modification

Note this function is not thread safe w.r.t. writing to UART
Return 0 if successed, or -1 when an error (specified by errno) have occurred.
Parameters
- `uart_num`: the UART number
- `mode`: line endings to send to UART

void **esp_vfs_dev_uart_use_nonblocking**(int *uart_num*)
set VFS to use simple functions for reading and writing UART Read is non-blocking, write is busy waiting until TX FIFO has enough space. These functions are used by default.

Parameters
- `uart_num`: UART peripheral number

void **esp_vfs_dev_uart_use_driver**(int *uart_num*)
set VFS to use UART driver for reading and writing

Note application must configure UART driver before calling these functions With these functions, read and write are blocking and interrupt-driven.
Parameters
- `uart_num`: UART peripheral number

void **esp_vfs_usb_serial_jtag_use_driver**(void)
set VFS to use USB-SERIAL-JTAG driver for reading and writing

Note application must configure USB-SERIAL-JTAG driver before calling these functions With these functions, read and write are blocking and interrupt-driven.

void **esp_vfs_usb_serial_jtag_use_nonblocking**(void)
set VFS to use simple functions for reading and writing UART Read is non-blocking, write is busy waiting until TX FIFO has enough space. These functions are used by default.

2.6.6 FAT 文件系统

ESP-IDF 使用 FatFs 库来实现 FAT 文件系统。FatFs 库位于 `fatfs` 组件中，您可以直接使用，也可以借助 C 标准库和 POSIX API 通过 VFS（虚拟文件系统）使用 FatFs 库的大多数功能。

此外，我们对 FatFs 库进行了扩展，新增了支持可插拔磁盘 I/O 调度层，从而允许在运行时将 FatFs 驱动映射到物理磁盘。

FatFs 与 VFS 配合使用

fatfs/vfs/esp_vfs_fat.h 头文件定义了连接 FatFs 和 VFS 的函数。

函数*esp_vfs_fat_register()* 分配一个 FATFS 结构，并在 VFS 中注册特定路径前缀。如果文件路径以此前缀开头，则对此文件的后续操作将转至 FatFs API。函数*esp_vfs_fat_unregister_path()* 删除在 VFS 中的注册，并释放 FATFS 结构。

多数应用程序在使用 esp_vfs_fat_ 函数时，采用如下步骤：

1. 调用*esp_vfs_fat_register()*，指定：
   - 挂载文件系统的路径前缀（例如，"/sdcard" 或 "/spiflash"）
   - FatFs 驱动编号
   - 一个用于接收指向 FATFS 结构指针的变量
2. 调用*ff_diskio_register()* 为上述步骤中的驱动编号注册磁盘 I/O 驱动；
3. 调用 FatFs 函数 f_mount，或 f_fdisk，f_mkfs，并使用与传递到*esp_vfs_fat_register()* 相同的驱动编号挂载文件系统。请参考 FatFs 文档，查看更多信息；
4. 调用 C 标准库和 POSIX API 对路径中带有步骤 1 中所述前缀的文件（例如，"/sdcard/hello.txt"）执行打开、读取、写入、擦除、复制等操作。
5. 您可以选择直接调用 FatFs 库函数，但需要使用没有 VFS 前缀的路径（例如，"/hello.txt"）；
6. 关闭所有打开的文件；
7. 调用 f_mount 并使用 NULL FATFS* 参数为与上述编号相同的驱动卸载文件系统；
8. 调用 FatFs 函数*ff_diskio_register()* 并使用 NULL ff_diskio_impl_t* 参数和相同的驱动编号来释放注册的磁盘 I/O 驱动。
9. 调用*esp_vfs_fat_unregister_path()* 并使用文件系统挂载的路径将 FatFs 从 NVS 中移除，并释放步骤 1 中分配的 FatFs 结构。

esp_vfs_fat_sdmmc_mount 和 esp_vfs_fat_sdmmc_unmount 这两个便捷函数对上述步骤进行了封装，并加入对 SD 卡初始化的处理，非常便捷。我们将在下一章节详细介绍这两个函数。

esp_err_t **esp_vfs_fat_register**(**const** char **base_path*, **const** char **fat_drive*, size_t *max_files*, FATFS ***out_fs*)

Register FATFS with VFS component.

This function registers given FAT drive in VFS, at the specified base path. If only one drive is used, fat_drive argument can be an empty string. Refer to FATFS library documentation on how to specify FAT drive. This function also allocates FATFS structure which should be used for f_mount call.

Note This function doesn’t mount the drive into FATFS, it just connects POSIX and C standard library IO function with FATFS. You need to mount desired drive into FATFS separately.

Return

- ESP_OK on success
- ESP_ERR_INVALID_STATE if esp_vfs_fat_register was already called
- ESP_ERR_NO_MEM if not enough memory or too many VFSes already registered

Parameters

- base_path: path prefix where FATFS should be registered
- fat_drive: FATFS drive specification; if only one drive is used, can be an empty string
- max_files: maximum number of files which can be open at the same time
- [out] out_fs: pointer to FATFS structure which can be used for FATFS f_mount call is returned via this argument.

esp_err_t **esp_vfs_fat_unregister_path**(**const** char **base_path*)

Un-register FATFS from VFS.

Note FATFS structure returned by esp_vfs_fat_register is destroyed after this call. Make sure to call f_mount function to unmount it before calling esp_vfs_fat_unregister_ctx. Difference between this function and the one above is that this one will release the correct drive, while the one above will release the last registered one

Return

- ESP_OK on success
- ESP_ERR_INVALID_STATE if FATFS is not registered in VFS

Parameters

- base_path: path prefix where FATFS is registered. This is the same used when esp_vfs_fat_register was called

FatFs 与 VFS 和 SD 卡配合使用

fatfs/vfs/esp_vfs_fat.h 头文件定义了两个便捷函数*esp_vfs_fat_sdmmc_mount()*和*esp_vfs_fat_sdmmc_unmount()*。这两个函数分别执行上一章节的步骤 1-3 和步骤 7-9，并初始化 SD 卡，但仅提供有限的错误处理功能。我们鼓励开发人员查看源代码并将更多高级功能集成到产品应用中。

esp_vfs_fat_sdmmc_unmount() 函数用于卸载文件系统并释放从*esp_vfs_fat_sdmmc_mount()*函数获取的资源。

esp_err_t **esp_vfs_fat_sdmmc_mount**(**const** char **base_path*, **const** *sdmmc_host_t* **host_config*, **const** void **slot_config*, **const** *esp_vfs_fat_mount_config_t* **mount_config*, *sdmmc_card_t* ***out_card*)

Convenience function to get FAT filesystem on SD card registered in VFS.

This is an all-in-one function which does the following:

- initializes SDMMC driver or SPI driver with configuration in host_config
- initializes SD card with configuration in slot_config
- mounts FAT partition on SD card using FATFS library, with configuration in mount_config
- registers FATFS library with VFS, with prefix given by base_prefix variable

This function is intended to make example code more compact. For real world applications, developers should implement the logic of probing SD card, locating and mounting partition, and registering FATFS in VFS, with proper error checking and handling of exceptional conditions.

Note Use this API to mount a card through SDSPI is deprecated. Please call `esp_vfs_fat_sdspi_mount()` instead for that case.

Return

- ESP_OK on success
- ESP_ERR_INVALID_STATE if esp_vfs_fat_sdmmc_mount was already called
- ESP_ERR_NO_MEM if memory can not be allocated
- ESP_FAIL if partition can not be mounted
- other error codes from SDMMC or SPI drivers, SDMMC protocol, or FATFS drivers

Parameters

- `base_path`: path where partition should be registered (e.g. "/sdcard")
- `host_config`: Pointer to structure describing SDMMC host. When using SDMMC peripheral, this structure can be initialized using SDMMC_HOST_DEFAULT() macro. When using SPI peripheral, this structure can be initialized using SDSPI_HOST_DEFAULT() macro.
- `slot_config`: Pointer to structure with slot configuration. For SDMMC peripheral, pass a pointer to *sdmmc_slot_config_t* structure initialized using SDMMC_SLOT_CONFIG_DEFAULT. (Deprecated) For SPI peripheral, pass a pointer to *sdspi_slot_config_t* structure initialized using SDSPI_SLOT_CONFIG_DEFAULT().
- `mount_config`: pointer to structure with extra parameters for mounting FATFS
- `[out] out_card`: if not NULL, pointer to the card information structure will be returned via this argument

struct esp_vfs_fat_mount_config_t

Configuration arguments for esp_vfs_fat_sdmmc_mount and esp_vfs_fat_spiflash_mount functions.

Public Members

bool **format_if_mount_failed**

If FAT partition can not be mounted, and this parameter is true, create partition table and format the filesystem.

int **max_files**

Max number of open files.

size_t **allocation_unit_size**

If format_if_mount_failed is set, and mount fails, format the card with given allocation unit size. Must

be a power of 2, between sector size and 128 * sector size. For SD cards, sector size is always 512 bytes. For wear_levelling, sector size is determined by CONFIG_WL_SECTOR_SIZE option.

Using larger allocation unit size will result in higher read/write performance and higher overhead when storing small files.

Setting this field to 0 will result in allocation unit set to the sector size.

esp_err_t **esp_vfs_fat_sdmmc_unmount**(void)

Unmount FAT filesystem and release resources acquired using esp_vfs_fat_sdmmc_mount.

Return

- ESP_OK on success
- ESP_ERR_INVALID_STATE if esp_vfs_fat_sdmmc_mount hasn't been called

FatFs 与 VFS 配合使用（只读模式下）

fatfs/vfs/esp_vfs_fat.h 头文件也定义了两个便捷函数*esp_vfs_fat_rawflash_mount()*和*esp_vfs_fat_rawflash_unmount()*。上述两个函数分别对 FAT 只读分区执行步骤 1-3 和步骤 7-9。有些数据分区仅在工厂时写入一次，之后在整个硬件生命周期内都不会再有任何改动。利用上述两个函数处理这种数据分区非常方便。

esp_err_t **esp_vfs_fat_rawflash_mount**(**const** char **base_path*, **const** char **partition_label*, **const** *esp_vfs_fat_mount_config_t* **mount_config*)

Convenience function to initialize read-only FAT filesystem and register it in VFS.

This is an all-in-one function which does the following:

- finds the partition with defined partition_label. Partition label should be configured in the partition table.
- mounts FAT partition using FATFS library
- registers FATFS library with VFS, with prefix given by base_prefix variable

Note Wear levelling is not used when FAT is mounted in read-only mode using this function.

Return

- ESP_OK on success
- ESP_ERR_NOT_FOUND if the partition table does not contain FATFS partition with given label
- ESP_ERR_INVALID_STATE if esp_vfs_fat_rawflash_mount was already called for the same partition
- ESP_ERR_NO_MEM if memory can not be allocated
- ESP_FAIL if partition can not be mounted
- other error codes from SPI flash driver, or FATFS drivers

Parameters

- `base_path`: path where FATFS partition should be mounted (e.g. "/spiflash")
- `partition_label`: label of the partition which should be used
- `mount_config`: pointer to structure with extra parameters for mounting FATFS

esp_err_t **esp_vfs_fat_rawflash_unmount**(**const** char **base_path*, **const** char **partition_label*)

Unmount FAT filesystem and release resources acquired using esp_vfs_fat_rawflash_mount.

Return

- ESP_OK on success
- ESP_ERR_INVALID_STATE if esp_vfs_fat_spiflash_mount hasn't been called

Parameters

- `base_path`: path where partition should be registered (e.g. "/spiflash")
- `partition_label`: label of partition to be unmounted

FatFs 磁盘 I/O 层

我们对 FatFs API 函数进行了扩展，实现了运行期间注册磁盘 I/O 驱动。

上述 API 为 SD/MMC 卡提供了磁盘 I/O 函数实现方式，可使用 `ff_diskio_register_sdmmc()` 注册指定的 FatFs 驱动编号。

void **ff_diskio_register**(BYTE *pdrv*, **const** *ff_diskio_impl_t* **discio_impl*)
Register or unregister diskio driver for given drive number.

When FATFS library calls one of disk_xxx functions for driver number pdrv, corresponding function in discio_impl for given pdrv will be called.

Parameters
- `pdrv`: drive number
- `discio_impl`: pointer to *ff_diskio_impl_t* structure with diskio functions or NULL to unregister and free previously registered drive

struct ff_diskio_impl_t
Structure of pointers to disk IO driver functions.

See FatFs documentation for details about these functions

Public Members

DSTATUS (***init**)(unsigned char pdrv)
disk initialization function

DSTATUS (***status**)(unsigned char pdrv)
disk status check function

DRESULT (***read**)(unsigned char pdrv, unsigned char *buff, uint32_t sector, unsigned count)
sector read function

DRESULT (***write**)(unsigned char pdrv, **const** unsigned char *buff, uint32_t sector, unsigned count)
sector write function

DRESULT (***ioctl**)(unsigned char pdrv, unsigned char cmd, void *buff)
function to get info about disk and do some misc operations

void **ff_diskio_register_sdmmc**(unsigned char *pdrv*, *sdmmc_card_t* **card*)
Register SD/MMC diskio driver

Parameters
- `pdrv`: drive number
- `card`: pointer to *sdmmc_card_t* structure describing a card; card should be initialized before calling f_mount.

esp_err_t **ff_diskio_register_wl_partition**(unsigned char *pdrv*, *wl_handle_t flash_handle*)
Register spi flash partition

Parameters
- `pdrv`: drive number
- `flash_handle`: handle of the wear levelling partition.

esp_err_t **ff_diskio_register_raw_partition**(unsigned char *pdrv*, **const** *esp_partition_t* **part_handle*)
Register spi flash partition

Parameters
- `pdrv`: drive number
- `part_handle`: pointer to raw flash partition.

2.6.7 磨损均衡 API

概述

ESP32 所使用的 flash，特别是 SPI flash 多数具备扇区结构，且每个扇区仅允许有限次数的擦除/修改操作。为了避免过度使用某一扇区，乐鑫提供了磨损均衡组件，无需用户介入即可帮助用户均衡各个扇区之间的磨损。

磨损均衡组件包含了通过分区组件对外部 SPI flash 进行数据读取、写入、擦除和存储器映射相关的 API 函数。磨损均衡组件还具有软件上更高级别的 API 函数，与*FAT 文件系统* 协同工作。

磨损均衡组件与 FAT 文件系统组件共用 FAT 文件系统的扇区，扇区大小为 4096 字节，是标准 flash 扇区的大小。在这种模式下，磨损均衡组件性能达到最佳，但需要在 RAM 中占用更多内存。

为了节省内存，磨损均衡组件还提供了另外两种模式，均使用 512 字节大小的扇区：

- **性能模式**：先将数据保存在 RAM 中，擦除扇区，然后将数据存储回 flash。如果设备在扇区擦写过程中突然断电，则整个扇区（4096 字节）数据将全部丢失。
- **安全模式**：数据先保存在 flash 中空余扇区，擦除扇区后，数据即存储回去。如果设备断电，上电后可立即恢复数据。

设备默认设置如下：

- 定义扇区大小为 512 字节
- 默认使用性能模式

您可以使用配置菜单更改设置。

磨损均衡组件不会将数据缓存在 RAM 中。写入和擦除函数直接修改 flash，函数返回后，flash 即完成修改。

磨损均衡访问 API

处理 flash 数据常用的 API 如下所示：

- `wl_mount` - 为指定分区挂载并初始化磨损均衡模块
- `wl_unmount` - 卸载分区并释放磨损均衡模块
- `wl_erase_range` - 擦除 flash 中指定的地址范围
- `wl_write` - 将数据写入分区
- `wl_read` - 从分区读取数据
- `wl_size` - 返回可用内存的大小（以字节为单位）
- `wl_sector_size` - 返回一个扇区的大小

请尽量避免直接使用原始磨损均衡函数，建议您使用文件系统特定的函数。

内存大小

内存大小是根据分区参数在磨损均衡模块中计算所得，由于模块使用 flash 部分扇区存储内部数据，因此计算所得内存大小有少许偏差。

另请参阅

- *FAT 文件系统*
- *分区表*

应用示例

storage/wear_levelling 中提供了一款磨损均衡驱动与 FatFs 库结合使用的示例。该示例初始化磨损均衡驱动，挂载 FAT 文件系统分区，并使用 POSIX（可移植操作系统接口）和 C 库 API 从中写入和读取数据。如需了解更多信息，请参考 storage/wear_levelling/README.md。

高级 API 参考

头文件

- fatfs/vfs/esp_vfs_fat.h

函数

esp_err_t **esp_vfs_fat_spiflash_mount**(**const** char **base_path*, **const** char **partition_label*, **const** *esp_vfs_fat_mount_config_t* **mount_config*, *wl_handle_t* **wl_handle*)

Convenience function to initialize FAT filesystem in SPI flash and register it in VFS.

This is an all-in-one function which does the following:

- finds the partition with defined partition_label. Partition label should be configured in the partition table.
- initializes flash wear levelling library on top of the given partition
- mounts FAT partition using FATFS library on top of flash wear levelling library
- registers FATFS library with VFS, with prefix given by base_prefix variable

This function is intended to make example code more compact.

Return

- ESP_OK on success
- ESP_ERR_NOT_FOUND if the partition table does not contain FATFS partition with given label
- ESP_ERR_INVALID_STATE if esp_vfs_fat_spiflash_mount was already called
- ESP_ERR_NO_MEM if memory can not be allocated
- ESP_FAIL if partition can not be mounted
- other error codes from wear levelling library, SPI flash driver, or FATFS drivers

Parameters

- `base_path`: path where FATFS partition should be mounted (e.g. “/spiflash”)
- `partition_label`: label of the partition which should be used
- `mount_config`: pointer to structure with extra parameters for mounting FATFS
- `[out] wl_handle`: wear levelling driver handle

struct esp_vfs_fat_mount_config_t

Configuration arguments for esp_vfs_fat_sdmmc_mount and esp_vfs_fat_spiflash_mount functions.

Public Members

bool **format_if_mount_failed**

If FAT partition can not be mounted, and this parameter is true, create partition table and format the filesystem.

int **max_files**

Max number of open files.

size_t **allocation_unit_size**

If format_if_mount_failed is set, and mount fails, format the card with given allocation unit size. Must be a power of 2, between sector size and 128 * sector size. For SD cards, sector size is always 512 bytes. For wear_levelling, sector size is determined by CONFIG_WL_SECTOR_SIZE option.

Using larger allocation unit size will result in higher read/write performance and higher overhead when storing small files.

Setting this field to 0 will result in allocation unit set to the sector size.

esp_err_t **esp_vfs_fat_spiflash_unmount**(**const** char **base_path*, *wl_handle_t wl_handle*)

Unmount FAT filesystem and release resources acquired using esp_vfs_fat_spiflash_mount.

Return

- ESP_OK on success
- ESP_ERR_INVALID_STATE if esp_vfs_fat_spiflash_mount hasn’t been called

Parameters

- `base_path`: path where partition should be registered (e.g. "/spiflash")
- `wl_handle`: wear levelling driver handle returned by esp_vfs_fat_spiflash_mount

中层 API 参考

Header File

- wear_levelling/include/wear_levelling.h

Functions

esp_err_t **wl_mount**(**const** *esp_partition_t* *partition, *wl_handle_t* *out_handle)

Mount WL for defined partition.

Return

- ESP_OK, if the allocation was successfully;
- ESP_ERR_INVALID_ARG, if WL allocation was unsuccessful;
- ESP_ERR_NO_MEM, if there was no memory to allocate WL components;

Parameters

- `partition`: that will be used for access
- `out_handle`: handle of the WL instance

esp_err_t **wl_unmount**(*wl_handle_t handle*)

Unmount WL for defined partition.

Return

- ESP_OK, if the operation completed successfully;
- or one of error codes from lower-level flash driver.

Parameters

- `handle`: WL partition handle

esp_err_t **wl_erase_range**(*wl_handle_t handle*, size_t *start_addr*, size_t *size*)

Erase part of the WL storage.

Return

- ESP_OK, if the range was erased successfully;
- ESP_ERR_INVALID_ARG, if iterator or dst are NULL;
- ESP_ERR_INVALID_SIZE, if erase would go out of bounds of the partition;
- or one of error codes from lower-level flash driver.

Parameters

- `handle`: WL handle that are related to the partition
- `start_addr`: Address where erase operation should start. Must be aligned to the result of function wl_sector_size(···).
- `size`: Size of the range which should be erased, in bytes. Must be divisible by result of function wl_sector_size(···)..

esp_err_t **wl_write**(*wl_handle_t handle*, size_t *dest_addr*, **const** void *src, size_t *size*)

Write data to the WL storage.

Before writing data to flash, corresponding region of flash needs to be erased. This can be done using wl_erase_range function.

Note Prior to writing to WL storage, make sure it has been erased with wl_erase_range call.

Return

- ESP_OK, if data was written successfully;
- ESP_ERR_INVALID_ARG, if dst_offset exceeds partition size;
- ESP_ERR_INVALID_SIZE, if write would go out of bounds of the partition;
- or one of error codes from lower-level flash driver.

Parameters

- `handle`: WL handle that are related to the partition
- `dest_addr`: Address where the data should be written, relative to the beginning of the partition.
- `src`: Pointer to the source buffer. Pointer must be non-NULL and buffer must be at least 'size' bytes long.

- `size`: Size of data to be written, in bytes.

esp_err_t **wl_read**(*wl_handle_t handle*, size_t *src_addr*, void **dest*, size_t *size*)
Read data from the WL storage.

Return
- ESP_OK, if data was read successfully;
- ESP_ERR_INVALID_ARG, if src_offset exceeds partition size;
- ESP_ERR_INVALID_SIZE, if read would go out of bounds of the partition;
- or one of error codes from lower-level flash driver.

Parameters
- `handle`: WL module instance that was initialized before
- `dest`: Pointer to the buffer where data should be stored. Pointer must be non-NULL and buffer must be at least ‘size’ bytes long.
- `src_addr`: Address of the data to be read, relative to the beginning of the partition.
- `size`: Size of data to be read, in bytes.

size_t **wl_size**(*wl_handle_t handle*)
Get size of the WL storage.

Return usable size, in bytes
Parameters
- `handle`: WL module handle that was initialized before

size_t **wl_sector_size**(*wl_handle_t handle*)
Get sector size of the WL instance.

Return sector size, in bytes
Parameters
- `handle`: WL module handle that was initialized before

Macros
WL_INVALID_HANDLE

Type Definitions
typedef int32_t **wl_handle_t**
wear levelling handle

2.6.8 SPIFFS 文件系统

概述

SPIFFS 是一个用于 SPI NOR flash 设备的嵌入式文件系统，支持磨损均衡、文件系统一致性检查等功能。

说明

- 目前，SPIFFS 尚不支持目录，但可以生成扁平结构。如果 SPIFFS 挂载在 `/spiffs` 下，在 `/spiffs/tmp/myfile.txt` 路径下创建一个文件则会在 SPIFFS 中生成一个名为 `/tmp/myfile.txt` 的文件，而不是在 `/spiffs/tmp` 下生成名为 `myfile.txt` 的文件；
- SPIFFS 并非实时栈，每次写操作耗时不等；
- 目前，SPIFFS 尚不支持检测或处理已损坏的块。

工具

spiffsgen.py spiffsgen.py:

```
python spiffsgen.py <image_size> <base_dir> <output_file>
```

参数（必选）说明如下：

- **image_size**：分区大小，用于烧录生成的 SPIFFS 映像；
- **base_dir**：创建 SPIFFS 映像的目录；
- **output_file**：SPIFFS 映像输出文件。

其他参数（可选）也参与控制映像的生成，您可以运行以下帮助命令，查看这些参数的具体信息：

```
python spiffsgen.py --help
```

上述可选参数对应 SPIFFS 构建配置选项。若想顺利生成可用的映像，请确保使用的参数或配置与构建 SPIFFS 时所用的参数或配置相同。运行帮助命令将显示参数所对应的 SPIFFS 构建配置。如未指定参数，将使用帮助信息中的默认值。

映像生成后，您可以使用 `esptool.py` 或 `parttool.py` 烧录映像。

您可以在命令行或脚本中手动单独调用 `spiffsgen.py`，也可以直接从构建系统调用 `spiffs_create_partition_image` 来使用 `spiffsgen.py`。

在 Make 构建系统中运行：

```
SPIFFS_IMAGE_FLASH_IN_PROJECT := ...
SPIFFS_IMAGE_DEPENDS := ...
$(eval $(call spiffs_create_partition_image,<partition>,<base_dir>))
```

在 CMake 构建系统中运行：

```
spiffs_create_partition_image(<partition> <base_dir> [FLASH_IN_PROJECT] [DEPENDS␣
↪dep dep dep...])
```

在构建系统中使用 `spiffsgen.py` 更为方便，构建配置自动传递给 `spiffsgen.py` 工具，确保生成的映像可用于构建。比如，单独调用 `spiffsgen.py` 时需要用到 *image_size* 参数，但在构建系统中调用 `spiffs_create_partition_image` 时，仅需要 *partition* 参数，映像大小将直接从工程分区表中获取。

Make 构建系统和 CMake 构建系统结构有所不同，请注意以下几点：

- 在 Make 构建系统中使用 `spiffs_create_partition_image`，需从工程 Makefile 中调用；
- 在 CMake 构建系统中使用 `spiffs_create_partition_image`，需从组件 CMakeLists.txt 文件调用。

您也可以指定 `FLASH_IN_PROJECT`，然后使用 `idf.py flash` 或 `make flash` 将映像与应用程序二进制文件、分区表等一起自动烧录至设备，例如：

在 Make 构建系统中运行：

```
SPIFFS_IMAGE_FLASH_IN_PROJECT := 1
$(eval $(call spiffs_create_partition_image,<partition>,<base_dir>))
```

在 CMake 构建系统中运行：

```
spiffs_create_partition_image(my_spiffs_partition my_folder FLASH_IN_PROJECT)
```

不指定 FLASH_IN_PROJECT/SPIFFS_IMAGE_FLASH_IN_PROJECT 也可以生成映像，但须使用 `esptool.py`、`parttool.py` 或自定义构建系统目标手动烧录。

有时基本目录中的内容是在构建时生成的，您可以使用 DEPENDS/SPIFFS_IMAGE_DEPENDS 指定目标，因此可以在生成映像之前执行此目标。

在 Make 构建系统中运行：

```
dep:
    ...
```

(下页继续)

(续上页)

```
SPIFFS_IMAGE_DEPENDS := dep
$(eval $(call spiffs_create_partition_image,<partition>,<base_dir>))
```

在 CMake 构建系统中运行:

```
add_custom_target(dep COMMAND ...)

spiffs_create_partition_image(my_spiffs_partition my_folder DEPENDS dep)
```

请参考 storage/spiffsgen，查看示例。

mkspiffs 您也可以使用 mkspiffs 工具创建 SPIFFS 分区映像。与 `spiffsgen.py` 相似，mkspiffs 也可以用于从指定文件夹中生成映像，然后使用 `esptool.py` 烧录映像。

该工具需要获取以下参数:

- **Block Size**：4096（SPI flash 标准）
- **Page Size**：256（SPI flash 标准）
- **Image Size**：分区大小（以字节为单位，可从分区表中获取）
- **Partition Offset**：分区起始地址（可从分区表内获取）

运行以下命令，将文件夹打包成 1 MB 大小的映像:

```
mkspiffs -c [src_folder] -b 4096 -p 256 -s 0x100000 spiffs.bin
```

运行以下命令，将映像烧录到 ESP32（偏移量：0x110000）:

```
python esptool.py --chip esp32 --port [port] --baud [baud] write_flash -z 0x110000␣
↪spiffs.bin
```

选择合适的 SPIFFS 工具 上面介绍的两款 SPIFFS 工具功能相似，需根据实际情况，选择合适的一款。

以下情况优先选用 `spiffsgen.py` 工具:

1. 仅需在构建时简单生成 SPIFFS 映像，请选择使用 `spiffsgen.py`，`spiffsgen.py` 可以直接在构建系统中使用函数或命令生成 SPIFFS 映像。
2. 主机没有可用的 C/C++ 编译器时，可以选择使用 `spiffsgen.py` 工具，`spiffsgen.py` 不需要编译。

以下情况优先选用 `mkspiffs` 工具:

1. 如果您除了需要生成映像外，还需要拆包 SPIFFS 映像，请选择使用 `mkspiffs` 工具。`spiffsgen.py` 目前尚不支持此功能。
2. 如果您当前环境中 Python 解释器不可用，但主机编译器可用，或者有预编译的 `mkspiffs` 二进制文件，此时请选择使用 `mkspiffs` 工具。但是，`mkspiffs` 没有集成到构建系统，用户必须自己完成以下工作：在构建期间编译 `mkspiffs`（如果未使用预编译的二进制文件），为输出文件创建构建规则或目标，将适当的参数传递给工具等。

另请参阅

- 分区表

应用示例

storage/spiffs 目录下提供了 SPIFFS 应用示例。该示例初始化并挂载了一个 SPIFFS 分区，然后使用 POSIX 和 C 库 API 写入和读取数据。请参考 `example` 目录下的 README.md 文件，查看详细信息。

高级 API 参考

Header File

- spiffs/include/esp_spiffs.h

Functions

esp_err_t **esp_vfs_spiffs_register**(**const** *esp_vfs_spiffs_conf_t* **conf*)

Register and mount SPIFFS to VFS with given path prefix.

Return

- ESP_OK if success
- ESP_ERR_NO_MEM if objects could not be allocated
- ESP_ERR_INVALID_STATE if already mounted or partition is encrypted
- ESP_ERR_NOT_FOUND if partition for SPIFFS was not found
- ESP_FAIL if mount or format fails

Parameters

- `conf`: Pointer to *esp_vfs_spiffs_conf_t* configuration structure

esp_err_t **esp_vfs_spiffs_unregister**(**const** char **partition_label*)

Unregister and unmount SPIFFS from VFS

Return

- ESP_OK if successful
- ESP_ERR_INVALID_STATE already unregistered

Parameters

- `partition_label`: Same label as passed to esp_vfs_spiffs_register.

bool **esp_spiffs_mounted**(**const** char **partition_label*)

Check if SPIFFS is mounted

Return

- true if mounted
- false if not mounted

Parameters

- `partition_label`: Optional, label of the partition to check. If not specified, first partition with subtype=spiffs is used.

esp_err_t **esp_spiffs_format**(**const** char **partition_label*)

Format the SPIFFS partition

Return

- ESP_OK if successful
- ESP_FAIL on error

Parameters

- `partition_label`: Same label as passed to esp_vfs_spiffs_register.

esp_err_t **esp_spiffs_info**(**const** char **partition_label*, size_t **total_bytes*, size_t **used_bytes*)

Get information for SPIFFS

Return

- ESP_OK if success
- ESP_ERR_INVALID_STATE if not mounted

Parameters

- `partition_label`: Same label as passed to esp_vfs_spiffs_register
- `[out] total_bytes`: Size of the file system
- `[out] used_bytes`: Current used bytes in the file system

Structures

struct esp_vfs_spiffs_conf_t

Configuration structure for esp_vfs_spiffs_register.

Public Members

const char ***base_path**
File path prefix associated with the filesystem.

const char ***partition_label**
Optional, label of SPIFFS partition to use. If set to NULL, first partition with subtype=spiffs will be used.

size_t **max_files**
Maximum files that could be open at the same time.

bool **format_if_mount_failed**
If true, it will format the file system if it fails to mount.

2.6.9 量产程序

介绍

这一程序主要用于量产时为每一设备创建工厂 NVS（非易失性存储器）分区映像。NVS 分区映像由 CSV（逗号分隔值）文件生成，文件中包含了用户提供的配置项及配置值。

注意，该程序仅创建用于量产的二进制映像，您需要使用以下工具将映像烧录到设备上：

- esptool.py。
- Flash 下载工具 （仅适用于 Windows）。下载后解压，然后按照 doc 文件夹中的说明操作。
- 使用定制的生产工具直接烧录程序。

准备工作

该程序需要用到分区公用程序。

- **操作系统要求：**
  - Linux、macOS 或 Windows（标准版）
- **安装依赖包：**
  - Python。

注解：

使用该程序之前，请确保：
- Python 路径已添加到 PATH 环境变量中；
- 已经安装 *requirement.txt* 中的软件包，*requirement.txt* 在 esp-idf 根目录下。

具体流程

CSV 配置文件

CSV 配置文件中包含设备待烧录的配置信息，定义了待烧录的配置项。

配置文件中数据格式如下（*REPEAT* 标签可选）：

```
name1,namespace,     <-- 第一行为 "namespace" 条目
key1,type1,encoding1
key2,type2,encoding2,REPEAT
name2,namespace,
key3,type3,encoding3
key4,type4,encoding4
```

注解： 文件第一行应始终为 namespace 条目。

每行应包含三个参数：key、type 和 encoding，并以逗号分隔。如果有 REPEAT 标签，则主 CSV 文件中所有设备此键值均相同。

有关各个参数的详细说明，请参阅 *NVS* 分区生成程序的 *README* 文件。

CSV 配置文件示例如下:

```
app,namespace,
firmware_key,data,hex2bin
serial_no,data,string,REPEAT <-- "serial_no" 被标记为 "REPEAT"
device_no,data,i32
```

注解:

请确保：

- 逗号‘,’前后无空格；
- CSV 文件每行末尾无空格。

主 CSV 文件

主 CSV 文件中包含设备待烧录的详细信息，文件中每行均对应一个设备实体。

主 CSV 文件的数据格式如下:

```
key1,key2,key3,.....
value1,value2,value3,....
```

注解： 文件中键 (key) 名应始终置于文件首行。从配置文件中获取的键，在此文件中的排列顺序应与其在配置文件中的排列顺序相同。主 CSV 文件同时可以包含其它列（键），这些列将被视为元数据，而不会编译进最终二进制文件。

每行应包含相应键的键值 (value)，并用逗号隔开。如果某键带有 REPEAT 标签，则仅需在第二行（即第一个条目）输入对应的值，后面其他行为空。

参数描述如下：

value Data value

value 是与键对应的键值。

主 CSV 文件示例如下:

```
id,firmware_key,serial_no,device_no
1,1a2b3c4d5e6faabb,A1,101
2,1a2b3c4d5e6fccdd,,102
3,1a2b3c4d5e6feeff,,103
```

注解： 如果出现 *REPEAT* 标签，则会在相同目录下生成一个新的主 CSV 文件用作主输入文件，并在每行为带有 *REPEAT* 标签的键插入键值。

量产程序还会创建中间 CSV 文件，NVS 分区程序将使用此 CSV 文件作为输入，然后生成二进制文件。

中间 CSV 文件的格式如下:

```
key,type,encoding,value
key,namespace, ,
key1,type1,encoding1,value1
key2,type2,encoding2,value2
```

此步骤将为每一设备生成一个中间 CSV 文件。

运行量产程序

使用方法:

```
python mfg_gen.py [-h] {generate,generate-key} ...
```

可选参数:

序号	参数	描述
1	-h, –help	显示帮助信息并退出

命令:

运行 mfg_gen.py {command} -h 查看更多帮助信息

序号	参数	描述
1	generate	生成 NVS 分区
2	generate-key	生成加密密钥

为每个设备生成工厂映像（默认）

使用方法:

```
python mfg_gen.py generate [-h] [--fileid FILEID] [--version {1,2}] [--keygen]
                                [--keyfile KEYFILE] [--inputkey INPUTKEY]
                                [--outdir OUTDIR]
                                conf values prefix size
```

位置参数:

参数	描述
conf	待解析的 CSV 配置文件路径
values	待解析的主 CSV 文件路径
prefix	每个输出文件名前缀的唯一名称
size	NVS 分区大小（以字节为单位，且为 4096 的整数倍）

可选参数:

参数	描述
-h, –help	显示帮助信息并退出
–fileid FILEID	每个文件名后缀的唯一文件标识符（主 CSV 文件中的任意键），默认为数值 1、2、3…
–version {1,2}	• 设置多页 Blob 版本。 • 版本 1 - 禁用多页 Blob； • 版本 2 - 启用多页 Blob； • 默认版本：版本 2
–keygen	生成 NVS 分区加密密钥
–inputkey INPUTKEY	内含 NVS 分区加密密钥的文件
–outdir OUTDIR	输出目录，用于存储创建的文件（默认当前目录）

请运行以下命令为每个设备生成工厂映像，量产程序同时提供了一个 CSV 示例文件:

```
python mfg_gen.py generate samples/sample_config.csv samples/sample_values_
↪singlepage_blob.csv Sample 0x3000
```

主 CSV 文件应在 `file` 类型下设置一个相对路径，指向运行该程序的当前目录。

为每个设备生成工厂加密映像

运行以下命令为每一设备生成工厂加密映像，量产程序同时提供了一个 CSV 示例文件。

- 通过量产程序生成加密密钥来进行加密:

```
python mfg_gen.py generate samples/sample_config.csv samples/sample_values_
↪singlepage_blob.csv Sample 0x3000 --keygen
```

注解: 创建的加密密钥格式为 `<outdir>/keys/keys-<prefix>-<fileid>.bin`。

注解: 加密密钥存储于新建文件的 `keys/` 目录下，与 NVS 密钥分区结构兼容。更多信息请参考*NVS 密钥分区*。

- 提供加密密钥用作二进制输入文件来进行加密:

```
python mfg_gen.py generate samples/sample_config.csv samples/sample_values_
↪singlepage_blob.csv Sample 0x3000 --inputkey keys/sample_keys.bin
```

仅生成加密密钥

使用方法:

```
python mfg_gen.py generate-key [-h] [--keyfile KEYFILE] [--outdir OUTDIR]
```

可选参数:

参数	描述
-h, –help	显示帮助信息并退出
–keyfile KEYFILE	加密密钥文件的输出路径
–outdir OUTDIR	输出目录，用于存储创建的文件（默认当前目录）

运行以下命令仅生成加密密钥:

```
python mfg_gen.py generate-key
```

注解： 创建的加密密钥格式为 <outdir>/keys/keys-<timestamp>.bin。时间戳格式为：%m-%d_%H-%M。

注解： 如需自定义目标文件名，请使用–keyfile 参数。

生成的加密密钥二进制文件还可以用于为每个设备的工厂映像加密。

fileid 参数的默认值为 1、2、3…，与主 CSV 文件中的行一一对应，内含设备配置值。

运行量产程序时，将在指定的 outdir 目录下创建以下文件夹：

- bin/ 存储生成的二进制文件
- csv/ 存储生成的中间 CSV 文件
- keys/ 存储加密密钥（创建工厂加密映像时会用到）

此部分 API 代码示例详见 ESP-IDF 项下 storage 目录。

2.7 System API

2.7.1 App Image Format

An application image consists of the following structures:

1. The *esp_image_header_t* structure describes the mode of SPI flash and the count of memory segments.
2. The *esp_image_segment_header_t* structure describes each segment, its length, and its location in ESP32's memory, followed by the data with a length of data_len. The data offset for each segment in the image is calculated in the following way:

- offset for 0 Segment = sizeof(*esp_image_header_t*) + sizeof(*esp_image_segment_header_t*).
- offset for 1 Segment = offset for 0 Segment + length of 0 Segment + sizeof(*esp_image_segment_header_t*).
- offset for 2 Segment = offset for 1 Segment + length of 1 Segment + sizeof(*esp_image_segment_header_t*).
- …

The count of each segment is defined in the segment_count field that is stored in *esp_image_header_t*. The count cannot be more than ESP_IMAGE_MAX_SEGMENTS.

To get the list of your image segments, please run the following command:

```
esptool.py --chip esp32 image_info build/app.bin
```

```
esptool.py v2.3.1
Image version: 1
Entry point: 40080ea4
13 segments
Segment 1: len 0x13ce0 load 0x3f400020 file_offs 0x00000018 SOC_DROM
Segment 2: len 0x00000 load 0x3ff80000 file_offs 0x00013d00 SOC_RTC_DRAM
Segment 3: len 0x00000 load 0x3ff80000 file_offs 0x00013d08 SOC_RTC_DRAM
Segment 4: len 0x028e0 load 0x3ffb0000 file_offs 0x00013d10 DRAM
Segment 5: len 0x00000 load 0x3ffb28e0 file_offs 0x000165f8 DRAM
Segment 6: len 0x00400 load 0x40080000 file_offs 0x00016600 SOC_IRAM
Segment 7: len 0x09600 load 0x40080400 file_offs 0x00016a08 SOC_IRAM
Segment 8: len 0x62e4c load 0x400d0018 file_offs 0x00020010 SOC_IROM
Segment 9: len 0x06cec load 0x40089a00 file_offs 0x00082e64 SOC_IROM
Segment 10: len 0x00000 load 0x400c0000 file_offs 0x00089b58 SOC_RTC_IRAM
Segment 11: len 0x00004 load 0x50000000 file_offs 0x00089b60 SOC_RTC_DATA
Segment 12: len 0x00000 load 0x50000004 file_offs 0x00089b6c SOC_RTC_DATA
```

(下页继续)

(续上页)

```
Segment 13: len 0x00000 load 0x50000004 file_offs 0x00089b74 SOC_RTC_DATA
Checksum: e8 (valid)Validation Hash:␣
↪407089ca0eae2bbf83b4120979d3354b1c938a49cb7a0c997f240474ef2ec76b (valid)
```

You can also see the information on segments in the IDF logs while your application is booting:

```
I (443) esp_image: segment 0: paddr=0x00020020 vaddr=0x3f400020 size=0x13ce0 (␣
↪81120) map
I (489) esp_image: segment 1: paddr=0x00033d08 vaddr=0x3ff80000 size=0x00000 ( 0)␣
↪load
I (530) esp_image: segment 2: paddr=0x00033d10 vaddr=0x3ff80000 size=0x00000 ( 0)␣
↪load
I (571) esp_image: segment 3: paddr=0x00033d18 vaddr=0x3ffb0000 size=0x028e0 (␣
↪10464) load
I (612) esp_image: segment 4: paddr=0x00036600 vaddr=0x3ffb28e0 size=0x00000 ( 0)␣
↪load
I (654) esp_image: segment 5: paddr=0x00036608 vaddr=0x40080000 size=0x00400 (␣
↪1024) load
I (695) esp_image: segment 6: paddr=0x00036a10 vaddr=0x40080400 size=0x09600 (␣
↪38400) load
I (737) esp_image: segment 7: paddr=0x00040018 vaddr=0x400d0018 size=0x62e4c␣
↪(405068) map
I (847) esp_image: segment 8: paddr=0x000a2e6c vaddr=0x40089a00 size=0x06cec (␣
↪27884) load
I (888) esp_image: segment 9: paddr=0x000a9b60 vaddr=0x400c0000 size=0x00000 ( 0)␣
↪load
I (929) esp_image: segment 10: paddr=0x000a9b68 vaddr=0x50000000 size=0x00004 ( 4)␣
↪load
I (971) esp_image: segment 11: paddr=0x000a9b74 vaddr=0x50000004 size=0x00000 ( 0)␣
↪load
I (1012) esp_image: segment 12: paddr=0x000a9b7c vaddr=0x50000004 size=0x00000 (␣
↪0) load
```

For more details on the type of memory segments and their address ranges, see *ESP32 Technical Reference Manual* > *System and Memory* > *Embedded Memory* [PDF].

3. The image has a single checksum byte after the last segment. This byte is written on a sixteen byte padded boundary, so the application image might need padding.
4. If the `hash_appended` field from *`esp_image_header_t`* is set then a SHA256 checksum will be appended. The value of SHA256 is calculated on the range from first byte and up to this field. The length of this field is 32 bytes.
5. If the options *CONFIG_SECURE_SIGNED_APPS_SCHEME* is set to ECDSA then the application image will have additional 68 bytes for an ECDSA signature, which includes:

- version word (4 bytes),
- signature data (64 bytes).

Application Description

The `DROM` segment starts with the *`esp_app_desc_t`* structure which carries specific fields describing the application:

- `secure_version` - see *Anti-rollback*.
- `version` - see *App version*. *
- `project_name` is filled from `PROJECT_NAME`. *
- `time` and `date` - compile time and date.
- `idf_ver` - version of ESP-IDF. *
- `app_elf_sha256` - contains sha256 for the elf application file.

* - The maximum length is 32 characters, including null-termination character. For example, if the length of `PROJECT_NAME` exceeds 32 characters, the excess characters will be disregarded.

This structure is useful for identification of images uploaded OTA because it has a fixed offset = sizeof(*esp_image_header_t*) + sizeof(*esp_image_segment_header_t*). As soon as a device receives the first fragment containing this structure, it has all the information to determine whether the update should be continued or not.

Adding a Custom Structure to an Application

Customer also has the opportunity to have similar structure with a fixed offset relative to the beginning of the image. The following pattern can be used to add a custom structure to your image:

```
const __attribute__((section(".rodata_custom_desc"))) esp_custom_app_desc_t custom_
↪app_desc = { ... }
```

Offset for custom structure is sizeof(*esp_image_header_t*) + sizeof(*esp_image_segment_header_t*) + sizeof(*esp_app_desc_t*).

To guarantee that the custom structure is located in the image even if it is not used, you need to add:

- For Make: add `COMPONENT_ADD_LDFLAGS += -u custom_app_desc` into `component.mk`
- For Cmake: add `target_link_libraries(${COMPONENT_TARGET} "-u custom_app_desc")` into `CMakeLists.txt`

API Reference

Header File

- bootloader_support/include/esp_app_format.h

Structures

struct esp_image_header_t

Main header of binary image.

Public Members

uint8_t **magic**

Magic word ESP_IMAGE_HEADER_MAGIC

uint8_t **segment_count**

Count of memory segments

uint8_t **spi_mode**

flash read mode (esp_image_spi_mode_t as uint8_t)

uint8_t **spi_speed** : 4

flash frequency (esp_image_spi_freq_t as uint8_t)

uint8_t **spi_size** : 4

flash chip size (esp_image_flash_size_t as uint8_t)

uint32_t **entry_addr**

Entry address

uint8_t **wp_pin**

WP pin when SPI pins set via efuse (read by ROM bootloader, the IDF bootloader uses software to configure the WP pin and sets this field to 0xEE=disabled)

uint8_t **spi_pin_drv**[3]

Drive settings for the SPI flash pins (read by ROM bootloader)

esp_chip_id_t **chip_id**

Chip identification number

uint8_t **min_chip_rev**
Minimal chip revision supported by image After the Major and Minor revision eFuses were introduced into the chips, this field is no longer used. But for compatibility reasons, we keep this field and the data in it. Use min_chip_rev_full instead. The software interprets this as a Major version for most of the chips and as a Minor version for the ESP32-C3.

uint16_t **min_chip_rev_full**
Minimal chip revision supported by image, in format: major * 100 + minor

uint16_t **max_chip_rev_full**
Maximal chip revision supported by image, in format: major * 100 + minor

uint8_t **reserved**[4]
Reserved bytes in additional header space, currently unused

uint8_t **hash_appended**
If 1, a SHA256 digest "simple hash" (of the entire image) is appended after the checksum. Included in image length. This digest is separate to secure boot and only used for detecting corruption. For secure boot signed images, the signature is appended after this (and the simple hash is included in the signed data).

struct esp_image_segment_header_t
Header of binary image segment.

Public Members

uint32_t **load_addr**
Address of segment

uint32_t **data_len**
Length of data

struct esp_app_desc_t
Description about application.

Public Members

uint32_t **magic_word**
Magic word ESP_APP_DESC_MAGIC_WORD

uint32_t **secure_version**
Secure version

uint32_t **reserv1**[2]
reserv1

char **version**[32]
Application version

char **project_name**[32]
Project name

char **time**[16]
Compile time

char **date**[16]
Compile date

char **idf_ver**[32]
Version IDF

uint8_t **app_elf_sha256**[32]
sha256 of elf file

uint32_t **reserv2**[20]
reserv2

Macros

ESP_IMAGE_HEADER_MAGIC
The magic word for the *esp_image_header_t* structure.

ESP_IMAGE_MAX_SEGMENTS
Max count of segments in the image.

ESP_APP_DESC_MAGIC_WORD
The magic word for the esp_app_desc structure that is in DROM.

Enumerations

enum esp_chip_id_t
ESP chip ID.

Values:

ESP_CHIP_ID_ESP32 = 0x0000
chip ID: ESP32

ESP_CHIP_ID_ESP32S2 = 0x0002
chip ID: ESP32-S2

ESP_CHIP_ID_ESP32S3 = 0x0004
chip ID: ESP32-S3

ESP_CHIP_ID_ESP32C3 = 0x0005
chip ID: ESP32-C3

ESP_CHIP_ID_INVALID = 0xFFFF
Invalid chip ID (we defined it to make sure the esp_chip_id_t is 2 bytes size)

enum esp_image_spi_mode_t
SPI flash mode, used in *esp_image_header_t*.

Values:

ESP_IMAGE_SPI_MODE_QIO
SPI mode QIO

ESP_IMAGE_SPI_MODE_QOUT
SPI mode QOUT

ESP_IMAGE_SPI_MODE_DIO
SPI mode DIO

ESP_IMAGE_SPI_MODE_DOUT
SPI mode DOUT

ESP_IMAGE_SPI_MODE_FAST_READ
SPI mode FAST_READ

ESP_IMAGE_SPI_MODE_SLOW_READ
SPI mode SLOW_READ

enum esp_image_spi_freq_t
SPI flash clock frequency.

Values:

ESP_IMAGE_SPI_SPEED_40M
SPI clock frequency 40 MHz

ESP_IMAGE_SPI_SPEED_26M
SPI clock frequency 26 MHz

ESP_IMAGE_SPI_SPEED_20M
SPI clock frequency 20 MHz

ESP_IMAGE_SPI_SPEED_80M = 0xF
SPI clock frequency 80 MHz

enum esp_image_flash_size_t
Supported SPI flash sizes.

Values:

ESP_IMAGE_FLASH_SIZE_1MB = 0
SPI flash size 1 MB

ESP_IMAGE_FLASH_SIZE_2MB
SPI flash size 2 MB

ESP_IMAGE_FLASH_SIZE_4MB
SPI flash size 4 MB

ESP_IMAGE_FLASH_SIZE_8MB
SPI flash size 8 MB

ESP_IMAGE_FLASH_SIZE_16MB
SPI flash size 16 MB

ESP_IMAGE_FLASH_SIZE_MAX
SPI flash size MAX

2.7.2 Application Level Tracing

Overview

IDF provides useful feature for program behaviour analysis: application level tracing. It is implemented in the corresponding library and can be enabled via menuconfig. This feature allows to transfer arbitrary data between host and ESP32 via JTAG interface with small overhead on program execution. Developers can use this library to send application specific state of execution to the host and receive commands or other type of info in the opposite direction at runtime. The main use cases of this library are:

1. Collecting application specific data, see 特定应用程序的跟踪
2. Lightweight logging to the host, see 记录日志到主机
3. System behaviour analysis, see 基于 *SEGGER SystemView* 的系统行为分析

API Reference

Header File

- app_trace/include/esp_app_trace.h

Functions

esp_err_t **esp_apptrace_init**(void)
Initializes application tracing module.

Note Should be called before any esp_apptrace_xxx call.
Return ESP_OK on success, otherwise see esp_err_t

void **esp_apptrace_down_buffer_config**(uint8_t **buf*, uint32_t *size*)
Configures down buffer.

Note Needs to be called before initiating any data transfer using esp_apptrace_buffer_get and esp_apptrace_write. This function does not protect internal data by lock.
Parameters
- `buf`: Address of buffer to use for down channel (host to target) data.

- `size`: Size of the buffer.

uint8_t *`esp_apptrace_buffer_get` (*esp_apptrace_dest_t dest*, uint32_t *size*, uint32_t *tmo*)
Allocates buffer for trace data. After data in buffer are ready to be sent off esp_apptrace_buffer_put must be called to indicate it.

Return non-NULL on success, otherwise NULL.
Parameters
- `dest`: Indicates HW interface to send data.
- `size`: Size of data to write to trace buffer.
- `tmo`: Timeout for operation (in us). Use ESP_APPTRACE_TMO_INFINITE to wait indefinitely.

esp_err_t `esp_apptrace_buffer_put` (*esp_apptrace_dest_t dest*, uint8_t *ptr, uint32_t *tmo*)
Indicates that the data in buffer are ready to be sent off. This function is a counterpart of and must be preceeded by esp_apptrace_buffer_get.

Return ESP_OK on success, otherwise see esp_err_t
Parameters
- `dest`: Indicates HW interface to send data. Should be identical to the same parameter in call to esp_apptrace_buffer_get.
- `ptr`: Address of trace buffer to release. Should be the value returned by call to esp_apptrace_buffer_get.
- `tmo`: Timeout for operation (in us). Use ESP_APPTRACE_TMO_INFINITE to wait indefinitely.

esp_err_t `esp_apptrace_write` (*esp_apptrace_dest_t dest*, `const` void *data, uint32_t *size*, uint32_t *tmo*)
Writes data to trace buffer.

Return ESP_OK on success, otherwise see esp_err_t
Parameters
- `dest`: Indicates HW interface to send data.
- `data`: Address of data to write to trace buffer.
- `size`: Size of data to write to trace buffer.
- `tmo`: Timeout for operation (in us). Use ESP_APPTRACE_TMO_INFINITE to wait indefinitely.

int `esp_apptrace_vprintf_to` (*esp_apptrace_dest_t dest*, uint32_t *tmo*, `const` char *fmt, va_list *ap*)
vprintf-like function to sent log messages to host via specified HW interface.

Return Number of bytes written.
Parameters
- `dest`: Indicates HW interface to send data.
- `tmo`: Timeout for operation (in us). Use ESP_APPTRACE_TMO_INFINITE to wait indefinitely.
- `fmt`: Address of format string.
- `ap`: List of arguments.

int `esp_apptrace_vprintf` (`const` char *fmt, va_list *ap*)
vprintf-like function to sent log messages to host.

Return Number of bytes written.
Parameters
- `fmt`: Address of format string.
- `ap`: List of arguments.

esp_err_t `esp_apptrace_flush` (*esp_apptrace_dest_t dest*, uint32_t *tmo*)
Flushes remaining data in trace buffer to host.

Return ESP_OK on success, otherwise see esp_err_t
Parameters
- `dest`: Indicates HW interface to flush data on.
- `tmo`: Timeout for operation (in us). Use ESP_APPTRACE_TMO_INFINITE to wait indefinitely.

esp_err_t `esp_apptrace_flush_nolock` (*esp_apptrace_dest_t dest*, uint32_t *min_sz*, uint32_t *tmo*)
Flushes remaining data in trace buffer to host without locking internal data. This is special version of esp_apptrace_flush which should be called from panic handler.

Return ESP_OK on success, otherwise see esp_err_t
Parameters
- `dest`: Indicates HW interface to flush data on.
- `min_sz`: Threshold for flushing data. If current filling level is above this value, data will be flushed. TRAX destinations only.
- `tmo`: Timeout for operation (in us). Use ESP_APPTRACE_TMO_INFINITE to wait indefinitely.

esp_err_t **esp_apptrace_read**(*esp_apptrace_dest_t dest*, void **data*, uint32_t **size*, uint32_t *tmo*)
Reads host data from trace buffer.

Return ESP_OK on success, otherwise see esp_err_t
Parameters
- `dest`: Indicates HW interface to read the data on.
- `data`: Address of buffer to put data from trace buffer.
- `size`: Pointer to store size of read data. Before call to this function pointed memory must hold requested size of data
- `tmo`: Timeout for operation (in us). Use ESP_APPTRACE_TMO_INFINITE to wait indefinitely.

uint8_t ***esp_apptrace_down_buffer_get**(*esp_apptrace_dest_t dest*, uint32_t **size*, uint32_t *tmo*)
Retrieves incoming data buffer if any. After data in buffer are processed esp_apptrace_down_buffer_put must be called to indicate it.

Return non-NULL on success, otherwise NULL.
Parameters
- `dest`: Indicates HW interface to receive data.
- `size`: Address to store size of available data in down buffer. Must be initialized with requested value.
- `tmo`: Timeout for operation (in us). Use ESP_APPTRACE_TMO_INFINITE to wait indefinitely.

esp_err_t **esp_apptrace_down_buffer_put**(*esp_apptrace_dest_t dest*, uint8_t **ptr*, uint32_t *tmo*)
Indicates that the data in down buffer are processed. This function is a counterpart of and must be preceeded by esp_apptrace_down_buffer_get.

Return ESP_OK on success, otherwise see esp_err_t
Parameters
- `dest`: Indicates HW interface to receive data. Should be identical to the same parameter in call to esp_apptrace_down_buffer_get.
- `ptr`: Address of trace buffer to release. Should be the value returned by call to esp_apptrace_down_buffer_get.
- `tmo`: Timeout for operation (in us). Use ESP_APPTRACE_TMO_INFINITE to wait indefinitely.

bool **esp_apptrace_host_is_connected**(*esp_apptrace_dest_t dest*)
Checks whether host is connected.

Return true if host is connected, otherwise false
Parameters
- `dest`: Indicates HW interface to use.

void ***esp_apptrace_fopen**(*esp_apptrace_dest_t dest*, **const** char **path*, **const** char **mode*)
Opens file on host. This function has the same semantic as ‘fopen’ except for the first argument.

Return non zero file handle on success, otherwise 0
Parameters
- `dest`: Indicates HW interface to use.
- `path`: Path to file.
- `mode`: Mode string. See fopen for details.

int **esp_apptrace_fclose**(*esp_apptrace_dest_t dest*, void **stream*)
Closes file on host. This function has the same semantic as ‘fclose’ except for the first argument.

Return Zero on success, otherwise non-zero. See fclose for details.
Parameters
- `dest`: Indicates HW interface to use.
- `stream`: File handle returned by esp_apptrace_fopen.

size_t **esp_apptrace_fwrite**(*esp_apptrace_dest_t dest*, **const** void **ptr*, size_t *size*, size_t *nmemb*, void **stream*)

Writes to file on host. This function has the same semantic as ‘fwrite’ except for the first argument.

Return Number of written items. See fwrite for details.

Parameters

- `dest`: Indicates HW interface to use.
- `ptr`: Address of data to write.
- `size`: Size of an item.
- `nmemb`: Number of items to write.
- `stream`: File handle returned by esp_apptrace_fopen.

size_t **esp_apptrace_fread**(*esp_apptrace_dest_t dest*, void **ptr*, size_t *size*, size_t *nmemb*, void **stream*)

Read file on host. This function has the same semantic as ‘fread’ except for the first argument.

Return Number of read items. See fread for details.

Parameters

- `dest`: Indicates HW interface to use.
- `ptr`: Address to store read data.
- `size`: Size of an item.
- `nmemb`: Number of items to read.
- `stream`: File handle returned by esp_apptrace_fopen.

int **esp_apptrace_fseek**(*esp_apptrace_dest_t dest*, void **stream*, long *offset*, int *whence*)

Set position indicator in file on host. This function has the same semantic as ‘fseek’ except for the first argument.

Return Zero on success, otherwise non-zero. See fseek for details.

Parameters

- `dest`: Indicates HW interface to use.
- `stream`: File handle returned by esp_apptrace_fopen.
- `offset`: Offset. See fseek for details.
- `whence`: Position in file. See fseek for details.

int **esp_apptrace_ftell**(*esp_apptrace_dest_t dest*, void **stream*)

Get current position indicator for file on host. This function has the same semantic as ‘ftell’ except for the first argument.

Return Current position in file. See ftell for details.

Parameters

- `dest`: Indicates HW interface to use.
- `stream`: File handle returned by esp_apptrace_fopen.

int **esp_apptrace_fstop**(*esp_apptrace_dest_t dest*)

Indicates to the host that all file operations are completed. This function should be called after all file operations are finished and indicate to the host that it can perform cleanup operations (close open files etc.).

Return ESP_OK on success, otherwise see esp_err_t

Parameters

- `dest`: Indicates HW interface to use.

void **esp_gcov_dump**(void)

Triggers gcov info dump. This function waits for the host to connect to target before dumping data.

Enumerations

enum esp_apptrace_dest_t

Application trace data destinations bits.

Values:

ESP_APPTRACE_DEST_JTAG = 1

JTAG destination.

ESP_APPTRACE_DEST_TRAX = *ESP_APPTRACE_DEST_JTAG*
xxx_TRAX name is obsolete, use more common xxx_JTAG

ESP_APPTRACE_DEST_UART0
UART0 destination.

ESP_APPTRACE_DEST_MAX = *ESP_APPTRACE_DEST_UART0*

ESP_APPTRACE_DEST_NUM

Header File

- app_trace/include/esp_sysview_trace.h

Functions

static *esp_err_t* **esp_sysview_flush**(uint32_t *tmo*)
Flushes remaining data in SystemView trace buffer to host.

Return ESP_OK.
Parameters
- `tmo`: Timeout for operation (in us). Use ESP_APPTRACE_TMO_INFINITE to wait indefinetly.

int **esp_sysview_vprintf**(**const** char **format*, va_list *args*)
vprintf-like function to sent log messages to the host.

Return Number of bytes written.
Parameters
- `format`: Address of format string.
- `args`: List of arguments.

esp_err_t **esp_sysview_heap_trace_start**(uint32_t *tmo*)
Starts SystemView heap tracing.

Return ESP_OK on success, ESP_ERR_TIMEOUT if operation has been timed out.
Parameters
- `tmo`: Timeout (in us) to wait for the host to be connected. Use -1 to wait forever.

esp_err_t **esp_sysview_heap_trace_stop**(void)
Stops SystemView heap tracing.

Return ESP_OK.

void **esp_sysview_heap_trace_alloc**(void **addr*, uint32_t *size*, **const** void **callers*)
Sends heap allocation event to the host.

Parameters
- `addr`: Address of allocated block.
- `size`: Size of allocated block.
- `callers`: Pointer to array with callstack addresses. Array size must be CONFIG_HEAP_TRACING_STACK_DEPTH.

void **esp_sysview_heap_trace_free**(void **addr*, **const** void **callers*)
Sends heap de-allocation event to the host.

Parameters
- `addr`: Address of de-allocated block.
- `callers`: Pointer to array with callstack addresses. Array size must be CONFIG_HEAP_TRACING_STACK_DEPTH.

2.7.3 Chip Revision

Overview

A new chip versioning logic was introduced in new chips. Chips have several eFuse version fields:

- Major wafer version (WAFER_VERSION_MAJOR eFuse)
- Minor wafer version (WAFER_VERSION_MINOR eFuse)
- Ignore maximal revision (DISABLE_WAFER_VERSION_MAJOR eFuse)

The new versioning logic is being introduced to distinguish changes in chips as breaking changes and non-breaking changes. Chips with non-breaking changes can run the same software as the previous chip. The previous chip means that the major version is the same.

If the newly released chip does not have breaking changes, that means it can run the same software as the previous chip, then in that chip we keep the same major version and increment the minor version by 1. Otherwise, if there is a breaking change in the newly released chip, meaning it can not run the same software as the previous chip, then in that chip we increase the major version and set the minor version to 0.

The software supports a number of revisions, from the minimum to the maximum (the min/max configs are defined in Kconfig). If the software is unaware of a new chip (when the chip version is out of range), it will refuse to run on it unless the Ignore maximum revision restrictions bit is set. This bit removes the upper revision limit.

Minimum versions limits the software to only run on a chip revision that is high enough to support some features. Maximum version is the maximum version that is well-supported by current software. When chip version is above the maximum version, software will reject to boot, because it may not work on, or work with risk on the chip.

Adding the major and minor wafer revision make the versioning logic is branchable.

注解： The previous versioning logic was based on a single eFuse version field (WAFER_VERSION). This approach makes it impossible to mark chips as breaking or non-breaking changes, and the versioning logic becomes linear.

Using the branched versioning scheme allows us to support more chips in the software without updating the software when a new released compatible chip is used. Thus, the software will be compatible with as many new chip revisions as possible. If the software is no longer compatible with a new chip with breaking changes, the software will abort.

Revisions

ECO	Revision (Major.Minor)
ECO0	v0.0
ECO1	v1.0
ECO1.1	v1.1
ECO2	v2.0
ECO3	v3.0
ECO4	v3.1

Chip Revision vX.Y, where:

- X means Major wafer version. If it is changed, it means that the current software version is not compatible with this released chip and the software must be updated to use this chip.
- Y means Minor wafer version. If it is changed that means the current software version is compatible with the released chip, and there is no need to update the software.

The vX.Y chip version format will be used further instead of the ECO number.

Representing Revision Requirement Of A Binary Image

The 2nd stage bootloader and the application binary images have the *esp_image_header_t* header, which stores the revision numbers of the chip on which the software can be run. This header has 3 fields related to revisions:

- min_chip_rev - Minimal chip MAJOR revision required by image (but for ESP32-C3 it is MINOR revision). Its value is determined by *CONFIG_ESP32_REV_MIN*.
- min_chip_rev_full - Minimal chip MINOR revision required by image in format: major * 100 + minor. Its value is determined by *CONFIG_ESP32_REV_MIN*.

- `max_chip_rev_full` - Maximal chip revision required by image in format: `major * 100 + minor`. Its value is determined by `CONFIG_ESP32_REV_MAX_FULL`. It can not be changed by user. Only Espressif can change it when a new version will be supported in IDF.

Chip Revision APIs

These APIs helps to get chip revision from eFuses:

- *`efuse_hal_chip_revision()`*. It returns revision in the `major * 100 + minor` format.
- *`efuse_hal_get_major_chip_version()`*. It returns Major revision.
- *`efuse_hal_get_minor_chip_version()`*. It returns Minor revision.

The following Kconfig definitions (in `major * 100 + minor` format) that can help add the chip revision dependency to the code:

- `CONFIG_ESP32_REV_MIN_FULL`
- `CONFIG_ESP_REV_MIN_FULL`
- `CONFIG_ESP32_REV_MAX_FULL`
- `CONFIG_ESP_REV_MAX_FULL`

Maximal And Minimal Revision Restrictions

The order for checking the minimum and maximum revisions:

1. The 1st stage bootloader (ROM bootloader) does not check minimal and maximal revision fields from *`esp_image_header_t`* before running the 2nd stage bootloader.
2. The 2nd stage bootloader checks at the initialization phase that bootloader itself can be launched on the chip of this revision. It extracts the minimum revision from the header of the bootloader image and checks against the chip revision from eFuses. If the chip revision is less than the minimum revision, the bootloader refuses to boot up and aborts. The maximum revision is not checked at this phase.
3. Then the 2nd stage bootloader checks the revision requirements of the application. It extracts the minimum and maximum revisions from the header of the application image and checks against the chip revision from eFuses. If the chip revision is less than the minimum revision or higher than the maximum revision, the bootloader refuses to boot up and aborts. However, if the Ignore maximal revision bit is set, the maximum revision constraint can be ignored. The ignore bit is set by the customer themself when there is confirmation that the software is able to work with this chip revision.
4. Further, at the OTA update stage, the running application checks if the new software matches the chip revision. It extracts the minimum and maximum revisions from the header of the new application image and checks against the chip revision from eFuses. It checks for revision matching in the same way that the bootloader does, so that the chip revision is between the min and max revisions (logic of ignoring max revision also applies).

Issues

1. If the 2nd stage bootloader is run on the chip revision < minimum revision shown in the image, a reboot occurs. The following message will be printed:

```
Image requires chip rev >= v3.0, but chip is v1.0
```

To resolve this issue:

- make sure the chip you are using is suitable for the software, or use a chip with the required minimum revision or higher.
- update the software with *CONFIG_ESP32_REV_MIN* to get it <= the revision of chip being used

2. If application does not match minimal and maximal chip revisions, a reboot occurs. The following message will be printed:

```
Image requires chip rev <= v2.99, but chip is v3.0
```

To resolve this issue, update the IDF to a newer version that supports the used chip (CONFIG_ESP32_REV_MAX_FULL). Another way to fix this is to set the Ignore maximal revision bit in eFuse or use a chip that is suitable for the software.

Backward Compatible With Bootloaders Built By Older ESP-IDF Versions

The old bootloaders (IDF < 5.0) do not know about Major and Minor wafer version eFuses. They use one single eFuse for this - wafer version.

The old bootloaders did not read the minor wafer version eFuse, the major version can be only <= 3. So it means that the old bootloader can detect correctly only chip version in range v0.0 - v3.0, where the minor version is always 0.

Please check the chip version using esptool chip_id command.

API Reference

Header File

- hal/include/hal/efuse_hal.h

Functions

uint32_t **efuse_hal_chip_revision**(void)
Returns chip version.

Return Chip version in format: Major * 100 + Minor

uint32_t **efuse_hal_get_major_chip_version**(void)
Returns major chip version.

uint32_t **efuse_hal_get_minor_chip_version**(void)
Returns minor chip version.

2.7.4 控制台终端

ESP-IDF 提供了 console 组件，它包含了开发基于串口的交互式控制终端所需要的所有模块，主要支持以下功能：

- 行编辑，由 linenoise 库具体实现，它支持处理退格键和方向键，支持回看命令的历史记录，支持命令的自动补全和参数提示。
- 将命令行拆分为参数列表。
- 参数解析，由 argtable3 库具体实现，该库提供解析 GNU 样式的命令行参数的 API。
- 用于注册和调度命令的函数。
- 帮助创建 REPL (Read-Evaluate-Print-Loop) 环境的函数。

注解： 这些功能模块可以一起使用也可以独立使用，例如仅使用行编辑和命令注册的功能，然后使用 getopt 函数或者自定义的函数来实现参数解析，而不是直接使用 argtable3 库。同样地，还可以使用更简单的命令输入方法（比如 fgets 函数）和其他用于命令分割和参数解析的方法。

行编辑

行编辑功能允许用户通过按键输入来编辑命令，使用退格键删除符号，使用左/右键在命令中移动光标，使用上/下键导航到之前输入的命令，使用制表键（“Tab”）来自动补全命令。

注解： 此功能依赖于终端应用程序对 ANSI 转义符的支持。因此，显示原始 UART 数据的串口监视器不能与行编辑库一同使用。如果运行 system/console 示例程序的时候看到的输出结果是 `[6n` 或者类似的转义字符而不是命令行提示符 `esp>` `` 时，就表明当前的串口监视器不支持 ANSI 转义字符。已知可用的串口监视程序有 GNU screen、minicom 和 idf_monitor.py（可以通过在项目目录下执行 ``idf.py monitor`` 来调用）。

前往这里可以查看 linenoise 库提供的所有函数的描述。

配置 Linenoise 库不需要显式地初始化，但是在调用行编辑函数之前，可能需要对某些配置的默认值稍作修改。

`linenoiseClearScreen()`

使用转义字符清除终端屏幕，并将光标定位在左上角。

`linenoiseSetMultiLine()`

在单行和多行编辑模式之间进行切换。单行模式下，如果命令的长度超过终端的宽度，会在行内滚动命令文本以显示文本的结尾，在这种情况下，文本的开头部分会被隐藏。单行模式在每次按下按键时发送给屏幕刷新的数据比较少，与多行模式相比更不容易发生故障。另一方面，在单行模式下编辑命令和复制命令将变得更加困难。默认情况下开启的是单行模式。

`linenoiseAllowEmpty()`

设置 linenoise 库收到空行的解析行为，设置为 `true` 时返回长度为零的字符串 (`""`)，设置为 `false` 时返回 `NULL`。默认情况下，将返回长度为零的字符串。

主循环 `linenoise()`

在大多数情况下，控制台应用程序都会具有相同的工作形式——在某个循环中不断读取输入的内容，然后解析再处理。`linenoise()` 是专门用来获取用户按键输入的函数，当回车键被按下后会便返回完整的一行内容。因此可以用它来完成前面循环中的“读取”任务。

`linenoiseFree()`

必须调用此函数才能释放从 `linenoise()` 函数获取的命令行缓冲区。

提示和补全 `linenoiseSetCompletionCallback()`

当用户按下制表键时，linenoise 会调用 **补全回调函数**，该回调函数会检查当前已经输入的内容，然后调用 `linenoiseAddCompletion()` 函数来提供所有可能的补全后的命令列表。启用补全功能，需要事先调用 `linenoiseSetCompletionCallback()` 函数来注册补全回调函数。

`console` 组件提供了一个现成的函数来为注册的命令提供补全功能*`esp_console_get_completion()`*（见下文）。

`linenoiseAddCompletion()`

补全回调函数会通过调用此函数来通知 linenoise 库当前键入命令所有可能的补全结果。

`linenoiseSetHintsCallback()`

每当用户的输入改变时，linenoise 就会调用此回调函数，检查到目前为止输入的命令行内容，然后提供带有提示信息的字符串（例如命令参数列表），然后会在同一行上用不同的颜色显示出该文本。

`linenoiseSetFreeHintsCallback()`

如果 **提示回调函数**返回的提示字符串是动态分配的或者需要以其它方式回收，就需要使用 `linenoiseSetFreeHintsCallback()` 注册具体的清理函数。

历史记录 `linenoiseHistorySetMaxLen()`

该函数设置要保留在内存中的最近输入的命令的数量。用户通过使用向上/向下箭头来导航历史记录。

`linenoiseHistoryAdd()`

Linenoise 不会自动向历史记录中添加命令，应用程序需要调用此函数来将命令字符串添加到历史记录中。

`linenoiseHistorySave()`

该函数将命令的历史记录从 RAM 中保存为文本文件，例如保存到 SD 卡或者 Flash 的文件系统中。

`linenoiseHistoryLoad()`

与 `linenoiseHistorySave` 相对应，从文件中加载历史记录。

`linenoiseHistoryFree()`

释放用于存储命令历史记录的内存。当使用完 linenoise 库后需要调用此函数。

将命令行拆分成参数列表

`console` 组件提供*`esp_console_split_argv()`* 函数来将命令行字符串拆分为参数列表。该函数会返回参数的数量（`argc`）和一个指针数组，该指针数组可以作为 `argv` 参数传递给任何接受 `argc, argv` 格式参数的函数。

根据以下规则来将命令行拆分成参数列表：

- 参数由空格分隔
- 如果参数本身需要使用空格，可以使用 \ （反斜杠）对它们进行转义
- 其它能被识别的转义字符有 \\ （显示反斜杠本身）和 \" （显示双引号）
- 可以使用双引号来引用参数，引号只可能出现在参数的开头和结尾。参数中的引号必须如上所述进行转义。参数周围的引号会被*`esp_console_split_argv()`* 函数删除

示例：

- `abc def 1 20 .3` → [`abc`, `def`, `1`, `20`, `.3`]
- `abc "123 456" def` → [`abc`, `123 456`, `def`]
- `` `a\ b\\c\" `` → [`a b\c"`]

参数解析

对于参数解析，`console` 组件使用 argtable3 库。有关 argtable3 的介绍请查看 教程 或者 Github 仓库中的 示例代码 。

命令的注册与调度

`console` 组件包含了一些工具函数，用来注册命令，将用户输入的命令和已经注册的命令进行匹配，使用命令行输入的参数调用命令。

应用程序首先调用*`esp_console_init()`* 来初始化命令注册模块，然后调用*`esp_console_cmd_register()`* 函数注册命令处理程序。

对于每个命令，应用程序需要提供以下信息（需要以 `esp_console_cmd_t` 结构体的形式给出）：

- 命令名字（不含空格的字符串）
- 帮助文档，解释该命令的用途
- 可选的提示文本，列出命令的参数。如果应用程序使用 `Argtable3` 库来解析参数，则可以通过提供指向 argtable 参数定义结构体的指针来自动生成提示文本
- 命令处理函数

命令注册模块还提供了其它函数：

esp_console_run()

该函数接受命令行字符串，使用*esp_console_split_argv()* 函数将其拆分为 argc/argv 形式的参数列表，在已经注册的组件列表中查找命令，如果找到，则执行其对应的处理程序。

esp_console_register_help_command()

将 `help` 命令添加到已注册命令列表中，此命令将会以列表的方式打印所有注册的命令及其参数和帮助文本。

esp_console_get_completion()

与 linenoise 库中的 `linenoiseSetCompletionCallback()` 一同使用的回调函数，根据已经注册的命令列表为 linenoise 提供补全功能。

esp_console_get_hint()

与 linenoise 库中 `linenoiseSetHintsCallback()` 一同使用的回调函数，为 linenoise 提供已经注册的命令的参数提示功能。

初始化 REPL 环境

除了上述的各种函数，`console` 组件还提供了一些 API 来帮助创建一个基本的 REPL 环境。

在一个典型的 console 应用中，你只需要调用*esp_console_new_repl_uart()*，它会为你初始化好构建在 UART 基础上的 REPL 环境，其中包括安装 UART 驱动，基本的 console 配置，创建一个新的线程来执行 REPL 任务，注册一些基本的命令（比如 *help* 命令）。

之后你可以使用*esp_console_cmd_register()* 来注册其它命令。REPL 环境在初始化后需要再调用*esp_console_start_repl()* 函数才能开始运行。

应用程序示例

system/console 目录下提供了 `console` 组件的示例应用程序，展示了具体的使用方法。该示例介绍了如何初始化 UART 和 VFS 的功能，设置 linenoise 库，从 UART 中读取命令并加以处理，然后将历史命令存储到 Flash 中。更多信息，请参阅示例代码目录中的 README.md 文件。

此外，ESP-IDF 还提供了众多基于 *console* 组件的示例程序，它们可以辅助应用程序的开发。例如，peripherals/i2c/i2c_tools，wifi/iperf 等等。

API 参考

Header File

- console/esp_console.h

Functions

esp_err_t **esp_console_init**(**const** *esp_console_config_t* **config*)

initialize console module

Note Call this once before using other console module features

Return

- ESP_OK on success
- ESP_ERR_NO_MEM if out of memory
- ESP_ERR_INVALID_STATE if already initialized
- ESP_ERR_INVALID_ARG if the configuration is invalid

Parameters

- `config`: console configuration

esp_err_t **esp_console_deinit**(void)

de-initialize console module

Note Call this once when done using console module functions

Return

- ESP_OK on success
- ESP_ERR_INVALID_STATE if not initialized yet

esp_err_t **esp_console_cmd_register**(**const** *esp_console_cmd_t* **cmd*)

Register console command.

Return

- ESP_OK on success
- ESP_ERR_NO_MEM if out of memory
- ESP_ERR_INVALID_ARG if command description includes invalid arguments

Parameters

- `cmd`: pointer to the command description; can point to a temporary value

esp_err_t **esp_console_run**(**const** char **cmdline*, int **cmd_ret*)

Run command line.

Return

- ESP_OK, if command was run
- ESP_ERR_INVALID_ARG, if the command line is empty, or only contained whitespace
- ESP_ERR_NOT_FOUND, if command with given name wasn't registered
- ESP_ERR_INVALID_STATE, if esp_console_init wasn't called

Parameters

- `cmdline`: command line (command name followed by a number of arguments)
- `[out] cmd_ret`: return code from the command (set if command was run)

size_t **esp_console_split_argv**(char **line*, char ***argv*, size_t *argv_size*)

Split command line into arguments in place.

```
* - This function finds whitespace-separated arguments in the given input line.
*
*     'abc def 1 20 .3' -> [ 'abc', 'def', '1', '20', '.3' ]
*
* - Argument which include spaces may be surrounded with quotes. In this case
*   spaces are preserved and quotes are stripped.
*
*     'abc "123 456" def' -> [ 'abc', '123 456', 'def' ]
*
* - Escape sequences may be used to produce backslash, double quote, and space:
*
*     'a\ b\\c\"' -> [ 'a b\c"' ]
*
```

Note Pointers to at most argv_size - 1 arguments are returned in argv array. The pointer after the last one (i.e. argv[argc]) is set to NULL.

Return number of arguments found (argc)

Parameters

- `line`: pointer to buffer to parse; it is modified in place
- `argv`: array where the pointers to arguments are written
- `argv_size`: number of elements in argv_array (max. number of arguments)

void **esp_console_get_completion**(**const** char **buf*, *linenoiseCompletions* **lc*)

Callback which provides command completion for linenoise library.

When using linenoise for line editing, command completion support can be enabled like this:

linenoiseSetCompletionCallback(&esp_console_get_completion);

Parameters

- `buf`: the string typed by the user
- `lc`: linenoiseCompletions to be filled in

const char ***esp_console_get_hint**(**const** char **buf*, int **color*, int **bold*)

Callback which provides command hints for linenoise library.

When using linenoise for line editing, hints support can be enabled as follows:

linenoiseSetHintsCallback((linenoiseHintsCallback*) &esp_console_get_hint);

The extra cast is needed because linenoiseHintsCallback is defined as returning a char* instead of const char*.

Return string containing the hint text. This string is persistent and should not be freed (i.e. linenoiseSetFreeHintsCallback should not be used).

Parameters

- `buf`: line typed by the user
- `[out] color`: ANSI color code to be used when displaying the hint
- `[out] bold`: set to 1 if hint has to be displayed in bold

esp_err_t **esp_console_register_help_command**(void)

Register a ‘help’ command.

Default ‘help’ command prints the list of registered commands along with hints and help strings.

Return

- ESP_OK on success
- ESP_ERR_INVALID_STATE, if esp_console_init wasn’t called

esp_err_t **esp_console_new_repl_uart**(**const** *esp_console_dev_uart_config_t* **dev_config*, **const** *esp_console_repl_config_t* **repl_config*, *esp_console_repl_t* ***ret_repl*)

Establish a console REPL environment over UART driver.

Note This is a all-in-one function to establish the environment needed for REPL, includes:

- Install the UART driver on the console UART (8n1, 115200, REF_TICK clock source)
- Configures the stdin/stdout to go through the UART driver
- Initializes linenoise
- Spawn new thread to run REPL in the background

Attention This function is meant to be used in the examples to make the code more compact. Applications which use console functionality should be based on the underlying linenoise and esp_console functions.

Return

- ESP_OK on success
- ESP_FAIL Parameter error

Parameters

- `[in] dev_config`: UART device configuration
- `[in] repl_config`: REPL configuration
- `[out] ret_repl`: return REPL handle after initialization succeed, return NULL otherwise

esp_err_t **esp_console_new_repl_usb_cdc**(**const** *esp_console_dev_usb_cdc_config_t* **dev_config*, **const** *esp_console_repl_config_t* **repl_config*, *esp_console_repl_t* ***ret_repl*)

Establish a console REPL environment over USB CDC.

Note This is a all-in-one function to establish the environment needed for REPL, includes:

- Initializes linenoise
- Spawn new thread to run REPL in the background

Attention This function is meant to be used in the examples to make the code more compact. Applications which use console functionality should be based on the underlying linenoise and esp_console functions.

Return

- ESP_OK on success
- ESP_FAIL Parameter error

Parameters

- `[in] dev_config`: USB CDC configuration
- `[in] repl_config`: REPL configuration
- `[out] ret_repl`: return REPL handle after initialization succeed, return NULL otherwise

esp_err_t **esp_console_start_repl**(*esp_console_repl_t* **repl*)
Start REPL environment.

Note Once the REPL got started, it won't be stopped until user call repl->del(repl) to destory the REPL environment.

Return
- ESP_OK on success
- ESP_ERR_INVALID_STATE, if repl has started already

Parameters
- `[in] repl`: REPL handle returned from esp_console_new_repl_xxx

Structures

struct esp_console_config_t
Parameters for console initialization.

Public Members

size_t **max_cmdline_length**
length of command line buffer, in bytes

size_t **max_cmdline_args**
maximum number of command line arguments to parse

int **hint_color**
ASCII color code of hint text.

int **hint_bold**
Set to 1 to print hint text in bold.

struct esp_console_repl_config_t
Parameters for console REPL (Read Eval Print Loop)

Public Members

uint32_t **max_history_len**
maximum length for the history

const char ***history_save_path**
file path used to save history commands, set to NULL won't save to file system

uint32_t **task_stack_size**
repl task stack size

uint32_t **task_priority**
repl task priority

const char ***prompt**
prompt (NULL represents default: "esp> ")

struct esp_console_dev_uart_config_t
Parameters for console device: UART.

Public Members

int **channel**
UART channel number (count from zero)

int **baud_rate**
Comunication baud rate.

int **tx_gpio_num**
GPIO number for TX path, -1 means using default one.

int **rx_gpio_num**
GPIO number for RX path, -1 means using default one.

struct esp_console_dev_usb_cdc_config_t
Parameters for console device: USB CDC.

Note It's an empty structure for now, reserved for future

struct esp_console_cmd_t
Console command description.

Public Members

const char ***command**
Command name. Must not be NULL, must not contain spaces. The pointer must be valid until the call to esp_console_deinit.

const char ***help**
Help text for the command, shown by help command. If set, the pointer must be valid until the call to esp_console_deinit. If not set, the command will not be listed in 'help' output.

const char ***hint**
Hint text, usually lists possible arguments. If set to NULL, and 'argtable' field is non-NULL, hint will be generated automatically

esp_console_cmd_func_t **func**
Pointer to a function which implements the command.

void ***argtable**
Array or structure of pointers to arg_xxx structures, may be NULL. Used to generate hint text if 'hint' is set to NULL. Array/structure which this field points to must end with an arg_end. Only used for the duration of esp_console_cmd_register call.

struct esp_console_repl_s
Console REPL base structure.

Public Members

esp_err_t (***del**)(*esp_console_repl_t* *repl)
Delete console REPL environment.

Return
- ESP_OK on success
- ESP_FAIL on errors

Parameters
- `[in] repl`: REPL handle returned from esp_console_new_repl_xxx

Macros

ESP_CONSOLE_CONFIG_DEFAULT()
Default console configuration value.

ESP_CONSOLE_REPL_CONFIG_DEFAULT()
Default console repl configuration value.

ESP_CONSOLE_DEV_UART_CONFIG_DEFAULT()

ESP_CONSOLE_DEV_CDC_CONFIG_DEFAULT()

Type Definitions

typedef struct *linenoiseCompletions* **linenoiseCompletions**

typedef int (***esp_console_cmd_func_t**)(int argc, char **argv)
Console command main function.

Return console command return code, 0 indicates "success"

Parameters

- `argc`: number of arguments
- `argv`: array with argc entries, each pointing to a zero-terminated string argument

typedef struct *esp_console_repl_s* **esp_console_repl_t**

Type defined for console REPL.

2.7.5 eFuse Manager

Introduction

The eFuse Manager library is designed to structure access to eFuse bits and make using these easy. This library operates eFuse bits by a structure name which is assigned in eFuse table. This sections introduces some concepts used by eFuse Manager.

Hardware description

The ESP32 has a number of eFuses which can store system and user parameters. Each eFuse is a one-bit field which can be programmed to 1 after which it cannot be reverted back to 0. Some of system parameters are using these eFuse bits directly by hardware modules and have special place (for example EFUSE_BLK0).

For more details, see *ESP32 Technical Reference Manual* > *eFuse Controller (eFuse)* [PDF]. Some eFuse bits are available for user applications.

ESP32 has 4 eFuse blocks each of the size of 256 bits (not all bits are available):

- EFUSE_BLK0 is used entirely for system purposes;
- EFUSE_BLK1 is used for flash encrypt key. If not using that Flash Encryption feature, they can be used for another purpose;
- EFUSE_BLK2 is used for security boot key. If not using that Secure Boot feature, they can be used for another purpose;
- EFUSE_BLK3 can be partially reserved for the custom MAC address, or used entirely for user application. Note that some bits are already used in IDF.

Each block is divided into 8 32-bits registers.

eFuse Manager component

The component has API functions for reading and writing fields. Access to the fields is carried out through the structures that describe the location of the eFuse bits in the blocks. The component provides the ability to form fields of any length and from any number of individual bits. The description of the fields is made in a CSV file in a table form. To generate from a tabular form (CSV file) in the C-source uses the tool *efuse_table_gen.py*. The tool checks the CSV file for uniqueness of field names and bit intersection, in case of using a *custom* file from the user's project directory, the utility will check with the *common* CSV file.

CSV files:

- common (*esp_efuse_table.csv*) - contains eFuse fields which are used inside the IDF. C-source generation should be done manually when changing this file (run command `idf.py efuse_common_table`). Note that changes in this file can lead to incorrect operation.
- custom - (optional and can be enabled by *CONFIG_EFUSE_CUSTOM_TABLE*) contains eFuse fields that are used by the user in their application. C-source generation should be done manually when changing this file and running `idf.py efuse_custom_table`.

Description CSV file

The CSV file contains a description of the eFuse fields. In the simple case, one field has one line of description. Table header:

```
# field_name,  efuse_block(EFUSE_BLK0..EFUSE_BLK3), bit_start(0..255),    bit_
↪count(1..256),         comment
```

Individual params in CSV file the following meanings:

field_name Name of field. The prefix *ESP_EFUSE_* will be added to the name, and this field name will be available in the code. This name will be used to access the fields. The name must be unique for all fields. If the line has an empty name, then this line is combined with the previous field. This allows you to set an arbitrary order of bits in the field, and expand the field as well (see `MAC_FACTORY` field in the common table).

efuse_block Block number. It determines where the eFuse bits will be placed for this field. Available EFUSE_BLK0..EFUSE_BLK3.

bit_start Start bit number (0..255). The bit_start field can be omitted. In this case, it will be set to bit_start + bit_count from the previous record, if it has the same efuse_block. Otherwise (if efuse_block is different, or this is the first entry), an error will be generated.

bit_count The number of bits to use in this field (1..-). This parameter can not be omitted. This field also may be `MAX_BLK_LEN` in this case, the field length will have the maximum block length, taking into account the coding scheme (applicable for `ESP_EFUSE_SECURE_BOOT_KEY` and `ESP_EFUSE_ENCRYPT_FLASH_KEY` fields). The value `MAX_BLK_LEN` depends on *CONFIG_EFUSE_CODE_SCHEME_SELECTOR*, will be replaced with "None" - 256, "3/4" - 192, "REPEAT" - 128.

comment This param is using for comment field, it also move to C-header file. The comment field can be omitted.

If a non-sequential bit order is required to describe a field, then the field description in the following lines should be continued without specifying a name, this will indicate that it belongs to one field. For example two fields MAC_FACTORY and MAC_FACTORY_CRC:

```
# Factory MAC address #
#######################
MAC_FACTORY,            EFUSE_BLK0,     72,     8,    Factory MAC addr [0]
,                       EFUSE_BLK0,     64,     8,    Factory MAC addr [1]
,                       EFUSE_BLK0,     56,     8,    Factory MAC addr [2]
,                       EFUSE_BLK0,     48,     8,    Factory MAC addr [3]
,                       EFUSE_BLK0,     40,     8,    Factory MAC addr [4]
,                       EFUSE_BLK0,     32,     8,    Factory MAC addr [5]
MAC_FACTORY_CRC,        EFUSE_BLK0,     80,     8,    CRC8 for factory MAC address
```

This field will available in code as ESP_EFUSE_MAC_FACTORY and ESP_EFUSE_MAC_FACTORY_CRC.

efuse_table_gen.py tool

The tool is designed to generate C-source files from CSV file and validate fields. First of all, the check is carried out on the uniqueness of the names and overlaps of the field bits. If an additional *custom* file is used, it will be checked with the existing *common* file (esp_efuse_table.csv). In case of errors, a message will be displayed and the string that caused the error. C-source files contain structures of type *esp_efuse_desc_t*.

To generate a *common* files, use the following command `idf.py efuse_common_table` or:

```
cd $IDF_PATH/components/efuse/
./efuse_table_gen.py esp32/esp_efuse_table.csv
```

After generation in the folder $IDF_PATH/components/efuse/*esp32* create:

- *esp_efuse_table.c* file.
- In *include* folder *esp_efuse_table.c* file.

To generate a *custom* files, use the following command `idf.py efuse_custom_table` or:

```
cd $IDF_PATH/components/efuse/
./efuse_table_gen.py esp32/esp_efuse_table.csv PROJECT_PATH/main/esp_efuse_custom_
↪table.csv
```

After generation in the folder PROJECT_PATH/main create:

- *esp_efuse_custom_table.c* file.
- In *include* folder *esp_efuse_custom_table.c* file.

To use the generated fields, you need to include two files:

```
#include "esp_efuse.h"
#include "esp_efuse_table.h" or "esp_efuse_custom_table.h"
```

Supported coding scheme

eFuse have three coding schemes:

- `None` (value 0).
- `3/4` (value 1).
- `Repeat` (value 2).

The coding scheme affects only EFUSE_BLK1, EFUSE_BLK2 and EFUSE_BLK3 blocks. EUSE_BLK0 block always has a coding scheme `None`. Coding changes the number of bits that can be written into a block, the block length is constant 256, some of these bits are used for encoding and not avaliable for the user.

When using a coding scheme, the length of the payload that can be written is limited (for more details `20.3.1.3 System Parameter coding_scheme`):

- None 256 bits.
- 3/4 192 bits.
- Repeat 128 bits.

You can find out the coding scheme of your chip:

- run a `espefuse.py -p PORT summary` command.
- from `esptool` utility logs (during flashing).
- calling the function in the code *`esp_efuse_get_coding_scheme()`* for the EFUSE_BLK3 block.

eFuse tables must always comply with the coding scheme in the chip. There is an *CONFIG_EFUSE_CODE_SCHEME_SELECTOR* option to select the coding type for tables in a Kconfig. When generating source files, if your tables do not follow the coding scheme, an error message will be displayed. Adjust the length or offset fields. If your program was compiled with `None` encoding and `3/4` is used in the chip, then the `ESP_ERR_CODING` error may occur when calling the eFuse API (the field is outside the block boundaries). If the field matches the new block boundaries, then the API will work without errors.

Also, 3/4 coding scheme imposes restrictions on writing bits belonging to one coding unit. The whole block with a length of 256 bits is divided into 4 coding units, and in each coding unit there are 6 bytes of useful data and 2 service bytes. These 2 service bytes contain the checksum of the previous 6 data bytes.

It turns out that only one field can be written into one coding unit. Repeated rewriting in one coding unit is prohibited. But if the record was made in advance or through a *`esp_efuse_write_block()`* function, then reading the fields belonging to one coding unit is possible.

In case `3/4` coding scheme, the writing process is divided into the coding units and we can not use the usual mode of writing some fields. We can prepare all the data for writing and burn it in one time. You can also use this mode for `None` coding scheme but it is not necessary. It is important for `3/4` coding scheme. `The batch writing mode` blocks `esp_efuse_read_...` operations.

After changing the coding scheme, run `efuse_common_table` and `efuse_custom_table` commands to check the tables of the new coding scheme.

To write some fields into one block, or different blocks in one time, you need to use the batch writing mode. Firstly set this mode through *esp_efuse_batch_write_begin()* function then write some fields as usual using the esp_efuse_write_... functions. At the end to burn them, call the *esp_efuse_batch_write_commit()* function. It burns prepared data to the eFuse blocks and disables the batch recording mode.

eFuse API

Access to the fields is via a pointer to the description structure. API functions have some basic operation:

- *esp_efuse_read_field_blob()* - returns an array of read eFuse bits.
- *esp_efuse_read_field_cnt()* - returns the number of bits programmed as "1".
- *esp_efuse_write_field_blob()* - writes an array.
- *esp_efuse_write_field_cnt()* - writes a required count of bits as "1".
- *esp_efuse_get_field_size()* - returns the number of bits by the field name.
- *esp_efuse_read_reg()* - returns value of eFuse register.
- *esp_efuse_write_reg()* - writes value to eFuse register.
- *esp_efuse_get_coding_scheme()* - returns eFuse coding scheme for blocks.
- *esp_efuse_read_block()* - reads key to eFuse block starting at the offset and the required size.
- *esp_efuse_write_block()* - writes key to eFuse block starting at the offset and the required size.
- *esp_efuse_batch_write_begin()* - set the batch mode of writing fields.
- *esp_efuse_batch_write_commit()* - writes all prepared data for batch writing mode and reset the batch writing mode.
- *esp_efuse_batch_write_cancel()* - reset the batch writing mode and prepared data.

For frequently used fields, special functions are made, like this *esp_efuse_get_pkg_ver()*.

How to add a new field

1. Find a free bits for field. Show *esp_efuse_table.csv* file or run idf.py show_efuse_table or the next command:

```
$ ./efuse_table_gen.py esp32/esp_efuse_table.csv --info
eFuse coding scheme: NONE
#       field_name                      efuse_block     bit_start       bit_count
1       WR_DIS_FLASH_CRYPT_CNT          EFUSE_BLK0          2               1
2       WR_DIS_BLK1                     EFUSE_BLK0          7               1
3       WR_DIS_BLK2                     EFUSE_BLK0          8               1
4       WR_DIS_BLK3                     EFUSE_BLK0          9               1
5       RD_DIS_BLK1                     EFUSE_BLK0          16              1
6       RD_DIS_BLK2                     EFUSE_BLK0          17              1
7       RD_DIS_BLK3                     EFUSE_BLK0          18              1
8       FLASH_CRYPT_CNT                 EFUSE_BLK0          20              7
9       MAC_FACTORY                     EFUSE_BLK0          32              8
10      MAC_FACTORY                     EFUSE_BLK0          40              8
11      MAC_FACTORY                     EFUSE_BLK0          48              8
12      MAC_FACTORY                     EFUSE_BLK0          56              8
13      MAC_FACTORY                     EFUSE_BLK0          64              8
14      MAC_FACTORY                     EFUSE_BLK0          72              8
15      MAC_FACTORY_CRC                 EFUSE_BLK0          80              8
16      CHIP_VER_DIS_APP_CPU            EFUSE_BLK0          96              1
17      CHIP_VER_DIS_BT                 EFUSE_BLK0          97              1
18      CHIP_VER_PKG                    EFUSE_BLK0          105             3
19      CHIP_CPU_FREQ_LOW               EFUSE_BLK0          108             1
20      CHIP_CPU_FREQ_RATED             EFUSE_BLK0          109             1
21      CHIP_VER_REV1                   EFUSE_BLK0          111             1
22      ADC_VREF_AND_SDIO_DREF          EFUSE_BLK0          136             6
23      XPD_SDIO_REG                    EFUSE_BLK0          142             1
24      SDIO_TIEH                       EFUSE_BLK0          143             1
```

(下页继续)

(续上页)

```
25      SDIO_FORCE                      EFUSE_BLK0      144                 1
26      ENCRYPT_CONFIG                  EFUSE_BLK0      188                 4
27      CONSOLE_DEBUG_DISABLE           EFUSE_BLK0      194                 1
28      ABS_DONE_0                      EFUSE_BLK0      196                 1
29      DISABLE_JTAG                    EFUSE_BLK0      198                 1
30      DISABLE_DL_ENCRYPT              EFUSE_BLK0      199                 1
31      DISABLE_DL_DECRYPT              EFUSE_BLK0      200                 1
32      DISABLE_DL_CACHE                EFUSE_BLK0      201                 1
33      ENCRYPT_FLASH_KEY               EFUSE_BLK1        0                 256
34      SECURE_BOOT_KEY                 EFUSE_BLK2        0                 256
35      MAC_CUSTOM_CRC                  EFUSE_BLK3        0                 8
36      MAC_CUSTOM                      EFUSE_BLK3        8                 48
37      ADC1_TP_LOW                     EFUSE_BLK3        96                7
38      ADC1_TP_HIGH                    EFUSE_BLK3        103               9
39      ADC2_TP_LOW                     EFUSE_BLK3        112               7
40      ADC2_TP_HIGH                    EFUSE_BLK3        119               9
41      SECURE_VERSION                  EFUSE_BLK3        128               32
42      MAC_CUSTOM_VER                  EFUSE_BLK3        184               8

Used bits in eFuse table:
EFUSE_BLK0
[2 2] [7 9] [16 18] [20 27] [32 87] [96 97] [105 109] [111 111] [136 144] [188␣
↪191] [194 194] [196 196] [198 201]

EFUSE_BLK1
[0 255]

EFUSE_BLK2
[0 255]

EFUSE_BLK3
[0 55] [96 159] [184 191]

Note: Not printed ranges are free for using. (bits in EFUSE_BLK0 are reserved for␣
↪Espressif)

Parsing eFuse CSV input file $IDF_PATH/components/efuse/esp32/esp_efuse_table.csv .
↪..
Verifying eFuse table...
```

The number of bits not included in square brackets is free (bits in EFUSE_BLK0 are reserved for Espressif). All fields are checked for overlapping.

2. Fill a line for field: field_name, efuse_block, bit_start, bit_count, comment.
3. Run a `show_efuse_table` command to check eFuse table. To generate source files run `efuse_common_table` or `efuse_custom_table` command.

Debug eFuse & Unit tests

Virtual eFuses The Kconfig option *CONFIG_EFUSE_VIRTUAL* will virtualize eFuse values inside the eFuse Manager, so writes are emulated and no eFuse values are permanently changed. This can be useful for debugging app and unit tests.

espefuse.py esptool includes a useful tool for reading/writing ESP32 eFuse bits - espefuse.py.

```
espefuse.py -p PORT summary

Connecting........__
Detecting chip type... ESP32
```

(下页继续)

(续上页)

```
espefuse.py v3.1-dev
EFUSE_NAME (Block)                          Description  = [Meaningful␣
↪Value] [Readable/Writeable] (Hex Value)
-------------------------------------------------------------------------
↪--------------
Calibration fuses:
BLK3_PART_RESERVE (BLOCK0):                 BLOCK3 partially served for ADC␣
↪calibration data    = True R/W (0b1)
ADC_VREF (BLOCK0):                          Voltage reference calibration   ␣
↪                   = 1114 R/W (0b00010)
ADC1_TP_LOW (BLOCK3):                       ADC1 150mV reading              ␣
↪                   = 346 R/W (0b0010001)
ADC1_TP_HIGH (BLOCK3):                      ADC1 850mV reading              ␣
↪                   = 3285 R/W (0b000000101)
ADC2_TP_LOW (BLOCK3):                       ADC2 150mV reading              ␣
↪                   = 449 R/W (0b0000111)
ADC2_TP_HIGH (BLOCK3):                      ADC2 850mV reading              ␣
↪                   = 3362 R/W (0b111110101)

Config fuses:
XPD_SDIO_FORCE (BLOCK0):                    Ignore MTDI pin (GPIO12) for VDD_
↪SDIO on reset      = False R/W (0b0)
XPD_SDIO_REG (BLOCK0):                      If XPD_SDIO_FORCE, enable VDD_
↪SDIO reg on reset    = False R/W (0b0)
XPD_SDIO_TIEH (BLOCK0):                     If XPD_SDIO_FORCE & XPD_SDIO_REG␣
↪                   = 1.8V R/W (0b0)
CLK8M_FREQ (BLOCK0):                        8MHz clock freq override        ␣
↪                   = 53 R/W (0x35)
SPI_PAD_CONFIG_CLK (BLOCK0):                Override SD_CLK pad (GPIO6/
↪SPICLK)                   = 0 R/W (0b00000)
SPI_PAD_CONFIG_Q (BLOCK0):                  Override SD_DATA_0 pad (GPIO7/
↪SPIQ)                  = 0 R/W (0b00000)
SPI_PAD_CONFIG_D (BLOCK0):                  Override SD_DATA_1 pad (GPIO8/
↪SPID)                  = 0 R/W (0b00000)
SPI_PAD_CONFIG_HD (BLOCK0):                 Override SD_DATA_2 pad (GPIO9/
↪SPIHD)                 = 0 R/W (0b00000)
SPI_PAD_CONFIG_CS0 (BLOCK0):                Override SD_CMD pad (GPIO11/
↪SPICS0)                  = 0 R/W (0b00000)
DISABLE_SDIO_HOST (BLOCK0):                 Disable SDIO host               ␣
↪                   = False R/W (0b0)

Efuse fuses:
WR_DIS (BLOCK0):                            Efuse write disable mask        ␣
↪                   = 0 R/W (0x0000)
RD_DIS (BLOCK0):                            Efuse read disable mask         ␣
↪                   = 0 R/W (0x0)
CODING_SCHEME (BLOCK0):                     Efuse variable block length␣
↪scheme
= 3/4 (BLK1-3 len=192 bits) R/W (0b01)
KEY_STATUS (BLOCK0):                        Usage of efuse block 3␣
↪(reserved)                   = False R/W (0b0)

Identity fuses:
MAC (BLOCK0):                               Factory MAC Address
= 84:0d:8e:18:8e:44 (CRC 0xad OK) R/W
MAC_CRC (BLOCK0):                           CRC8 for factory MAC address    ␣
↪                   = 173 R/W (0xad)
CHIP_VER_REV1 (BLOCK0):                     Silicon Revision 1              ␣
↪                   = True R/W (0b1)
CHIP_VER_REV2 (BLOCK0):                     Silicon Revision 2              ␣
↪                   = False R/W (0b0)
```

(下页继续)

(续上页)

```
CHIP_VERSION (BLOCK0):                    Reserved for future chip␣
↪versions                    = 2 R/W (0b10)
CHIP_PACKAGE (BLOCK0):                    Chip package identifier          ␣
↪                    = 0 R/W (0b000)
MAC_VERSION (BLOCK3):                     Version of the MAC field         ␣
↪                    = 0 R/W (0x00)

Security fuses:
FLASH_CRYPT_CNT (BLOCK0):                 Flash encryption mode counter    ␣
↪                    = 0 R/W (0b0000000)
UART_DOWNLOAD_DIS (BLOCK0):               Disable UART download mode␣
↪(ESP32 rev3 only)        = False R/W (0b0)
FLASH_CRYPT_CONFIG (BLOCK0):              Flash encryption config (key␣
↪tweak bits)            = 0 R/W (0x0)
CONSOLE_DEBUG_DISABLE (BLOCK0):           Disable ROM BASIC interpreter␣
↪fallback              = True R/W (0b1)
ABS_DONE_0 (BLOCK0):                      Secure boot V1 is enabled for␣
↪bootloader image      = False R/W (0b0)
ABS_DONE_1 (BLOCK0):                      Secure boot V2 is enabled for␣
↪bootloader image      = False R/W (0b0)
JTAG_DISABLE (BLOCK0):                    Disable JTAG                     ␣
↪                    = False R/W (0b0)
DISABLE_DL_ENCRYPT (BLOCK0):              Disable flash encryption in UART␣
↪bootloader         = False R/W (0b0)
DISABLE_DL_DECRYPT (BLOCK0):              Disable flash decryption in UART␣
↪bootloader         = False R/W (0b0)
DISABLE_DL_CACHE (BLOCK0):                Disable flash cache in UART␣
↪bootloader              = False R/W (0b0)
BLOCK1 (BLOCK1):                          Flash encryption key
= 00 00 00 00 00 00 00 00 00 00 00 00 00 00 00 00 00 00 00 00 00 00 00 00␣
↪R/W
BLOCK2 (BLOCK2):                          Secure boot key
= 00 00 00 00 00 00 00 00 00 00 00 00 00 00 00 00 00 00 00 00 00 00 00 00␣
↪R/W
BLOCK3 (BLOCK3):                          Variable Block 3
= 00 00 00 00 00 00 00 00 00 00 00 91 02 87 fa 00 00 00 00 00 00 00 00 00␣
↪R/W

Flash voltage (VDD_SDIO) determined by GPIO12 on reset (High for 1.8V,␣
↪Low/NC for 3.3V).
```

To get a dump for all eFuse registers.

```
espefuse.py -p PORT dump

Connecting........_
Detecting chip type... ESP32
BLOCK0          (                ) [0 ] read_regs: 00000000 8e188e44␣
↪00ad840d 0000e000 00000235 00000000 00000005
BLOCK1          (flash_encryption) [1 ] read_regs: 00000000 00000000␣
↪00000000 00000000 00000000 00000000
BLOCK2          (secure_boot_v1 s) [2 ] read_regs: 00000000 00000000␣
↪00000000 00000000 00000000 00000000
BLOCK3          (                ) [3 ] read_regs: 00000000 00000000␣
↪00000000 fa870291 00000000 00000000
espefuse.py v3.1-dev
```

Header File

- efuse/include/esp_efuse.h

Functions

esp_err_t **esp_efuse_read_field_blob**(**const** *esp_efuse_desc_t* ***field*[], void ****dst*, size_t *dst_size_bits*)

Reads bits from EFUSE field and writes it into an array.

The number of read bits will be limited to the minimum value from the description of the bits in "field" structure or "dst_size_bits" required size. Use "esp_efuse_get_field_size()" function to determine the length of the field.

Note Please note that reading in the batch mode does not show uncommitted changes.

Return

- ESP_OK: The operation was successfully completed.
- ESP_ERR_INVALID_ARG: Error in the passed arguments.

Parameters

- `[in] field`: A pointer to the structure describing the fields of efuse.
- `[out] dst`: A pointer to array that will contain the result of reading.
- `[in] dst_size_bits`: The number of bits required to read. If the requested number of bits is greater than the field, the number will be limited to the field size.

bool **esp_efuse_read_field_bit**(**const** *esp_efuse_desc_t* ***field*[])

Read a single bit eFuse field as a boolean value.

Note The value must exist and must be a single bit wide. If there is any possibility of an error in the provided arguments, call esp_efuse_read_field_blob() and check the returned value instead.

Note If assertions are enabled and the parameter is invalid, execution will abort

Note Please note that reading in the batch mode does not show uncommitted changes.

Return

- true: The field parameter is valid and the bit is set.
- false: The bit is not set, or the parameter is invalid and assertions are disabled.

Parameters

- `[in] field`: A pointer to the structure describing the fields of efuse.

esp_err_t **esp_efuse_read_field_cnt**(**const** *esp_efuse_desc_t* ***field*[], size_t ****out_cnt*)

Reads bits from EFUSE field and returns number of bits programmed as "1".

If the bits are set not sequentially, they will still be counted.

Note Please note that reading in the batch mode does not show uncommitted changes.

Return

- ESP_OK: The operation was successfully completed.
- ESP_ERR_INVALID_ARG: Error in the passed arguments.

Parameters

- `[in] field`: A pointer to the structure describing the fields of efuse.
- `[out] out_cnt`: A pointer that will contain the number of programmed as "1" bits.

esp_err_t **esp_efuse_write_field_blob**(**const** *esp_efuse_desc_t* ***field*[], **const** void ****src*, size_t *src_size_bits*)

Writes array to EFUSE field.

The number of write bits will be limited to the minimum value from the description of the bits in "field" structure or "src_size_bits" required size. Use "esp_efuse_get_field_size()" function to determine the length of the field. After the function is completed, the writing registers are cleared.

Return

- ESP_OK: The operation was successfully completed.
- ESP_ERR_INVALID_ARG: Error in the passed arguments.
- ESP_ERR_EFUSE_REPEATED_PROG: Error repeated programming of programmed bits is strictly forbidden.
- ESP_ERR_CODING: Error range of data does not match the coding scheme.

Parameters

- `[in] field`: A pointer to the structure describing the fields of efuse.
- `[in] src`: A pointer to array that contains the data for writing.
- `[in] src_size_bits`: The number of bits required to write.

esp_err_t **esp_efuse_write_field_cnt**(**const** *esp_efuse_desc_t* **field*[], size_t *cnt*)
Writes a required count of bits as “1” to EFUSE field.

If there are no free bits in the field to set the required number of bits to “1”, ESP_ERR_EFUSE_CNT_IS_FULL error is returned, the field will not be partially recorded. After the function is completed, the writing registers are cleared.

Return
- ESP_OK: The operation was successfully completed.
- ESP_ERR_INVALID_ARG: Error in the passed arguments.
- ESP_ERR_EFUSE_CNT_IS_FULL: Not all requested cnt bits is set.

Parameters
- `[in] field`: A pointer to the structure describing the fields of efuse.
- `[in] cnt`: Required number of programmed as “1” bits.

esp_err_t **esp_efuse_write_field_bit**(**const** *esp_efuse_desc_t* **field*[])
Write a single bit eFuse field to 1.

For use with eFuse fields that are a single bit. This function will write the bit to value 1 if it is not already set, or does nothing if the bit is already set.

This is equivalent to calling esp_efuse_write_field_cnt() with the cnt parameter equal to 1, except that it will return ESP_OK if the field is already set to 1.

Return
- ESP_OK: The operation was successfully completed, or the bit was already set to value 1.
- ESP_ERR_INVALID_ARG: Error in the passed arugments, including if the efuse field is not 1 bit wide.

Parameters
- `[in] field`: Pointer to the structure describing the efuse field.

esp_err_t **esp_efuse_set_write_protect**(esp_efuse_block_t *blk*)
Sets a write protection for the whole block.

After that, it is impossible to write to this block. The write protection does not apply to block 0.

Return
- ESP_OK: The operation was successfully completed.
- ESP_ERR_INVALID_ARG: Error in the passed arguments.
- ESP_ERR_EFUSE_CNT_IS_FULL: Not all requested cnt bits is set.
- ESP_ERR_NOT_SUPPORTED: The block does not support this command.

Parameters
- `[in] blk`: Block number of eFuse. (EFUSE_BLK1, EFUSE_BLK2 and EFUSE_BLK3)

esp_err_t **esp_efuse_set_read_protect**(esp_efuse_block_t *blk*)
Sets a read protection for the whole block.

After that, it is impossible to read from this block. The read protection does not apply to block 0.

Return
- ESP_OK: The operation was successfully completed.
- ESP_ERR_INVALID_ARG: Error in the passed arguments.
- ESP_ERR_EFUSE_CNT_IS_FULL: Not all requested cnt bits is set.
- ESP_ERR_NOT_SUPPORTED: The block does not support this command.

Parameters
- `[in] blk`: Block number of eFuse. (EFUSE_BLK1, EFUSE_BLK2 and EFUSE_BLK3)

int **esp_efuse_get_field_size**(**const** *esp_efuse_desc_t* **field*[])
Returns the number of bits used by field.

Return Returns the number of bits used by field.

Parameters
- `[in] field`: A pointer to the structure describing the fields of efuse.

uint32_t **esp_efuse_read_reg**(esp_efuse_block_t *blk*, unsigned int *num_reg*)
Returns value of efuse register.

This is a thread-safe implementation. Example: EFUSE_BLK2_RDATA3_REG where (blk=2, num_reg=3)

Note Please note that reading in the batch mode does not show uncommitted changes.
Return Value of register
Parameters
- `[in] blk`: Block number of eFuse.
- `[in] num_reg`: The register number in the block.

esp_err_t **esp_efuse_write_reg**(esp_efuse_block_t *blk*, unsigned int *num_reg*, uint32_t *val*)
Write value to efuse register.

Apply a coding scheme if necessary. This is a thread-safe implementation. Example: EFUSE_BLK3_WDATA0_REG where (blk=3, num_reg=0)

Return
- ESP_OK: The operation was successfully completed.
- ESP_ERR_EFUSE_REPEATED_PROG: Error repeated programming of programmed bits is strictly forbidden.

Parameters
- `[in] blk`: Block number of eFuse.
- `[in] num_reg`: The register number in the block.
- `[in] val`: Value to write.

esp_efuse_coding_scheme_t **esp_efuse_get_coding_scheme**(esp_efuse_block_t *blk*)
Return efuse coding scheme for blocks.

Note: The coding scheme is applicable only to 1, 2 and 3 blocks. For 0 block, the coding scheme is always `NONE`.

Return Return efuse coding scheme for blocks
Parameters
- `[in] blk`: Block number of eFuse.

esp_err_t **esp_efuse_read_block**(esp_efuse_block_t *blk*, void **dst_key*, size_t *offset_in_bits*, size_t *size_bits*)
Read key to efuse block starting at the offset and the required size.

Note Please note that reading in the batch mode does not show uncommitted changes.
Return
- ESP_OK: The operation was successfully completed.
- ESP_ERR_INVALID_ARG: Error in the passed arguments.
- ESP_ERR_CODING: Error range of data does not match the coding scheme.

Parameters
- `[in] blk`: Block number of eFuse.
- `[in] dst_key`: A pointer to array that will contain the result of reading.
- `[in] offset_in_bits`: Start bit in block.
- `[in] size_bits`: The number of bits required to read.

esp_err_t **esp_efuse_write_block**(esp_efuse_block_t *blk*, **const** void **src_key*, size_t *offset_in_bits*, size_t *size_bits*)
Write key to efuse block starting at the offset and the required size.

Return
- ESP_OK: The operation was successfully completed.
- ESP_ERR_INVALID_ARG: Error in the passed arguments.
- ESP_ERR_CODING: Error range of data does not match the coding scheme.
- ESP_ERR_EFUSE_REPEATED_PROG: Error repeated programming of programmed bits

Parameters
- `[in] blk`: Block number of eFuse.
- `[in] src_key`: A pointer to array that contains the key for writing.
- `[in] offset_in_bits`: Start bit in block.
- `[in] size_bits`: The number of bits required to write.

uint32_t **esp_efuse_get_pkg_ver**(void)
Returns chip package from efuse.

Return chip package

void **esp_efuse_burn_new_values**(void)
Permanently update values written to the efuse write registers.

After updating EFUSE_BLKx_WDATAx_REG registers with new values to write, call this function to permanently write them to efuse.

After burning new efuses, the read registers are updated to match the new efuse values.

Note Setting bits in efuse is permanent, they cannot be unset.
Note Due to this restriction you don't need to copy values to Efuse write registers from the matching read registers, bits which are set in the read register but unset in the matching write register will be unchanged when new values are burned.
Note This function is not threadsafe, if calling code updates efuse values from multiple tasks then this is caller's responsibility to serialise.

void **esp_efuse_reset**(void)
Reset efuse write registers.

Efuse write registers are written to zero, to negate any changes that have been staged here.

Note This function is not threadsafe, if calling code updates efuse values from multiple tasks then this is caller's responsibility to serialise.

void **esp_efuse_disable_basic_rom_console**(void)
Disable BASIC ROM Console via efuse.

By default, if booting from flash fails the ESP32 will boot a BASIC console in ROM.

Call this function (from bootloader or app) to permanently disable the console on this chip.

esp_err_t **esp_efuse_disable_rom_download_mode**(void)
Disable ROM Download Mode via eFuse.

Permanently disables the ROM Download Mode feature. Once disabled, if the SoC is booted with strapping pins set for ROM Download Mode then an error is printed instead.

Note Not all SoCs support this option. An error will be returned if called on an ESP32 with a silicon revision lower than 3, as these revisions do not support this option.
Note If ROM Download Mode is already disabled, this function does nothing and returns success.
Return
- ESP_OK If the eFuse was successfully burned, or had already been burned.
- ESP_ERR_NOT_SUPPORTED (ESP32 only) This SoC is not capable of disabling UART download mode
- ESP_ERR_INVALID_STATE (ESP32 only) This eFuse is write protected and cannot be written

void **esp_efuse_write_random_key**(uint32_t *blk_wdata0_reg*)
Write random data to efuse key block write registers.

Note Caller is responsible for ensuring efuse block is empty and not write protected, before calling.
Note Behaviour depends on coding scheme: a 256-bit key is generated and written for Coding Scheme "None", a 192-bit key is generated, extended to 256-bits by the Coding Scheme, and then writtten for 3/4 Coding Scheme.
Note This function does not burn the new values, caller should call esp_efuse_burn_new_values() when ready to do this.
Parameters
- `blk_wdata0_reg`: Address of the first data write register in the block

uint32_t **esp_efuse_read_secure_version**(void)
Return secure_version from efuse field.

Return Secure version from efuse field

bool **esp_efuse_check_secure_version**(uint32_t *secure_version*)
Check secure_version from app and secure_version and from efuse field.

Return

- True: If version of app is equal or more then secure_version from efuse.

Parameters

- `secure_version`: Secure version from app.

esp_err_t **esp_efuse_update_secure_version** (uint32_t *secure_version*)

Write efuse field by secure_version value.

Update the secure_version value is available if the coding scheme is None. Note: Do not use this function in your applications. This function is called as part of the other API.

Return

- ESP_OK: Successful.
- ESP_FAIL: secure version of app cannot be set to efuse field.
- ESP_ERR_NOT_SUPPORTED: Anti rollback is not supported with the 3/4 and Repeat coding scheme.

Parameters

- `[in] secure_version`: Secure version from app.

void **esp_efuse_init** (uint32_t *offset*, uint32_t *size*)

Initializes variables: offset and size to simulate the work of an eFuse.

Note: To simulate the work of an eFuse need to set CONFIG_BOOTLOADER_EFUSE_SECURE_VERSION_EMULATE option and to add in the partition.csv file a line `efuse_em, data, efuse, , 0x2000,`.

Parameters

- `[in] offset`: The starting address of the partition where the eFuse data will be located.
- `[in] size`: The size of the partition.

esp_err_t **esp_efuse_batch_write_begin** (void)

Set the batch mode of writing fields.

This mode allows you to write the fields in the batch mode when need to burn several efuses at one time. To enable batch mode call begin() then perform as usually the necessary operations read and write and at the end call commit() to actually burn all written efuses. The batch mode can be used nested. The commit will be done by the last commit() function. The number of begin() functions should be equal to the number of commit() functions.

Note: If batch mode is enabled by the first task, at this time the second task cannot write/read efuses. The second task will wait for the first task to complete the batch operation.

Note Please note that reading in the batch mode does not show uncommitted changes.

```
// Example of using the batch writing mode.

// set the batch writing mode
esp_efuse_batch_write_begin();

// use any writing functions as usual
esp_efuse_write_field_blob(ESP_EFUSE_...);
esp_efuse_write_field_cnt(ESP_EFUSE_...);
esp_efuse_set_write_protect(EFUSE_BLKx);
esp_efuse_write_reg(EFUSE_BLKx, ...);
esp_efuse_write_block(EFUSE_BLKx, ...);
esp_efuse_write(ESP_EFUSE_1, 3);  // ESP_EFUSE_1 == 1, here we write a new␣
↪value = 3. The changes will be burn by the commit() function.
esp_efuse_read_...(ESP_EFUSE_1);  // this function returns ESP_EFUSE_1 == 1␣
↪because uncommitted changes are not readable, it will be available only␣
↪after commit.
...

// esp_efuse_batch_write APIs can be called recursively.
esp_efuse_batch_write_begin();
esp_efuse_set_write_protect(EFUSE_BLKx);
esp_efuse_batch_write_commit(); // the burn will be skipped here, it will be␣
↪done in the last commit().
```

(下页继续)

(续上页)

```
...

// Write all of these fields to the efuse registers
esp_efuse_batch_write_commit();
esp_efuse_read_...(ESP_EFUSE_1);  // this function returns ESP_EFUSE_1 == 3.
```

Return

- ESP_OK: Successful.

esp_err_t **esp_efuse_batch_write_cancel**(void)

Reset the batch mode of writing fields.

It will reset the batch writing mode and any written changes.

Return

- ESP_OK: Successful.
- ESP_ERR_INVALID_STATE: Tha batch mode was not set.

esp_err_t **esp_efuse_batch_write_commit**(void)

Writes all prepared data for the batch mode.

Must be called to ensure changes are written to the efuse registers. After this the batch writing mode will be reset.

Return

- ESP_OK: Successful.
- ESP_ERR_INVALID_STATE: The deferred writing mode was not set.

esp_err_t **esp_efuse_check_errors**(void)

Checks eFuse errors in BLOCK0.

It does a BLOCK0 check if eFuse EFUSE_ERR_RST_ENABLE is set. If BLOCK0 has an error, it prints the error and returns ESP_FAIL, which should be treated as esp_restart.

Note Refers to ESP32-C3 only.

Return

- ESP_OK: No errors in BLOCK0.
- ESP_FAIL: Error in BLOCK0 requiring reboot.

Structures

struct esp_efuse_desc_t

Type definition for an eFuse field.

Public Members

esp_efuse_block_t **efuse_block** : 8

Block of eFuse

uint8_t **bit_start**

Start bit [0..255]

uint16_t **bit_count**

Length of bit field [1..-]

Macros

ESP_ERR_EFUSE

Base error code for efuse api.

ESP_OK_EFUSE_CNT

OK the required number of bits is set.

ESP_ERR_EFUSE_CNT_IS_FULL
Error field is full.

ESP_ERR_EFUSE_REPEATED_PROG
Error repeated programming of programmed bits is strictly forbidden.

ESP_ERR_CODING
Error while a encoding operation.

ESP_ERR_NOT_ENOUGH_UNUSED_KEY_BLOCKS
Error not enough unused key blocks available

2.7.6 Error Codes and Helper Functions

This section lists definitions of common ESP-IDF error codes and several helper functions related to error handling.

For general information about error codes in ESP-IDF, see *Error Handling*.

For the full list of error codes defined in ESP-IDF, see *Error Code Reference*.

API Reference

Header File

- esp_common/include/esp_err.h

Functions

const char ***esp_err_to_name** (*esp_err_t code*)
Returns string for esp_err_t error codes.

This function finds the error code in a pre-generated lookup-table and returns its string representation.

The function is generated by the Python script tools/gen_esp_err_to_name.py which should be run each time an esp_err_t error is modified, created or removed from the IDF project.

Return string error message
Parameters
- `code`: esp_err_t error code

const char ***esp_err_to_name_r** (*esp_err_t code*, char **buf*, size_t *buflen*)
Returns string for esp_err_t and system error codes.

This function finds the error code in a pre-generated lookup-table of esp_err_t errors and returns its string representation. If the error code is not found then it is attempted to be found among system errors.

The function is generated by the Python script tools/gen_esp_err_to_name.py which should be run each time an esp_err_t error is modified, created or removed from the IDF project.

Return buf containing the string error message
Parameters
- `code`: esp_err_t error code
- `[out] buf`: buffer where the error message should be written
- `buflen`: Size of buffer buf. At most buflen bytes are written into the buf buffer (including the terminating null byte).

Macros

ESP_OK
esp_err_t value indicating success (no error)

ESP_FAIL
Generic esp_err_t code indicating failure

ESP_ERR_NO_MEM
Out of memory

ESP_ERR_INVALID_ARG
Invalid argument

ESP_ERR_INVALID_STATE
Invalid state

ESP_ERR_INVALID_SIZE
Invalid size

ESP_ERR_NOT_FOUND
Requested resource not found

ESP_ERR_NOT_SUPPORTED
Operation or feature not supported

ESP_ERR_TIMEOUT
Operation timed out

ESP_ERR_INVALID_RESPONSE
Received response was invalid

ESP_ERR_INVALID_CRC
CRC or checksum was invalid

ESP_ERR_INVALID_VERSION
Version was invalid

ESP_ERR_INVALID_MAC
MAC address was invalid

ESP_ERR_WIFI_BASE
Starting number of WiFi error codes

ESP_ERR_MESH_BASE
Starting number of MESH error codes

ESP_ERR_FLASH_BASE
Starting number of flash error codes

ESP_ERR_HW_CRYPTO_BASE
Starting number of HW cryptography module error codes

ESP_ERROR_CHECK(x)
Macro which can be used to check the error code, and terminate the program in case the code is not ESP_OK. Prints the error code, error location, and the failed statement to serial output.

Disabled if assertions are disabled.

ESP_ERROR_CHECK_WITHOUT_ABORT(x)
Macro which can be used to check the error code. Prints the error code, error location, and the failed statement to serial output. In comparison with ESP_ERROR_CHECK(), this prints the same error message but isn't terminating the program.

Type Definitions

typedef int **esp_err_t**

2.7.7 ESP HTTPS OTA

Overview

`esp_https_ota` provides simplified APIs to perform firmware upgrades over HTTPS. It's an abstraction layer over existing OTA APIs.

Application Example

```
esp_err_t do_firmware_upgrade()
{
    esp_http_client_config_t config = {
        .url = CONFIG_FIRMWARE_UPGRADE_URL,
        .cert_pem = (char *)server_cert_pem_start,
    };
    esp_err_t ret = esp_https_ota(&config);
    if (ret == ESP_OK) {
        esp_restart();
    } else {
        return ESP_FAIL;
    }
    return ESP_OK;
}
```

Signature Verification

For additional security, signature of OTA firmware images can be verified. For that, refer 没有安全启动的安全 *OTA* 升级

API Reference

Header File

- esp_https_ota/include/esp_https_ota.h

Functions

esp_err_t **esp_https_ota**(**const** *esp_http_client_config_t* **config*)

HTTPS OTA Firmware upgrade.

This function allocates HTTPS OTA Firmware upgrade context, establishes HTTPS connection, reads image data from HTTP stream and writes it to OTA partition and finishes HTTPS OTA Firmware upgrade operation. This API supports URL redirection, but if CA cert of URLs differ then it should be appended to `cert_pem` member of `config`.

Note This API handles the entire OTA operation, so if this API is being used then no other APIs from `esp_https_ota` component should be called. If more information and control is needed during the HTTPS OTA process, then one can use `esp_https_ota_begin` and subsequent APIs. If this API returns successfully, esp_restart() must be called to boot from the new firmware image.

Return

- ESP_OK: OTA data updated, next reboot will use specified partition.
- ESP_FAIL: For generic failure.
- ESP_ERR_INVALID_ARG: Invalid argument
- ESP_ERR_OTA_VALIDATE_FAILED: Invalid app image
- ESP_ERR_NO_MEM: Cannot allocate memory for OTA operation.
- ESP_ERR_FLASH_OP_TIMEOUT or ESP_ERR_FLASH_OP_FAIL: Flash write failed.
- For other return codes, refer OTA documentation in esp-idf ' s app_update component.

Parameters

- `[in] config`: pointer to *esp_http_client_config_t* structure.

esp_err_t **esp_https_ota_begin**(*esp_https_ota_config_t* **ota_config*, *esp_https_ota_handle_t* **handle*)

Start HTTPS OTA Firmware upgrade.

This function initializes ESP HTTPS OTA context and establishes HTTPS connection. This function must be invoked first. If this function returns successfully, then `esp_https_ota_perform` should be called to continue with the OTA process and there should be a call to `esp_https_ota_finish` on completion

of OTA operation or on failure in subsequent operations. This API supports URL redirection, but if CA cert of URLs differ then it should be appended to `cert_pem` member of `http_config`, which is a part of `ota_config`. In case of error, this API explicitly sets `handle` to NULL.

Note This API is blocking, so setting `is_async` member of `http_config` structure will result in an error.

Return

- ESP_OK: HTTPS OTA Firmware upgrade context initialised and HTTPS connection established
- ESP_FAIL: For generic failure.
- ESP_ERR_INVALID_ARG: Invalid argument (missing/incorrect config, certificate, etc.)
- For other return codes, refer documentation in app_update component and esp_http_client component in esp-idf.

Parameters

- `[in] ota_config`: pointer to *esp_https_ota_config_t* structure
- `[out] handle`: pointer to an allocated data of type `esp_https_ota_handle_t` which will be initialised in this function

esp_err_t **esp_https_ota_perform**(*esp_https_ota_handle_t https_ota_handle*)

Read image data from HTTP stream and write it to OTA partition.

This function reads image data from HTTP stream and writes it to OTA partition. This function must be called only if esp_https_ota_begin() returns successfully. This function must be called in a loop since it returns after every HTTP read operation thus giving you the flexibility to stop OTA operation midway.

Return

- ESP_ERR_HTTPS_OTA_IN_PROGRESS: OTA update is in progress, call this API again to continue.
- ESP_OK: OTA update was successful
- ESP_FAIL: OTA update failed
- ESP_ERR_INVALID_ARG: Invalid argument
- ESP_ERR_OTA_VALIDATE_FAILED: Invalid app image
- ESP_ERR_NO_MEM: Cannot allocate memory for OTA operation.
- ESP_ERR_FLASH_OP_TIMEOUT or ESP_ERR_FLASH_OP_FAIL: Flash write failed.
- For other return codes, refer OTA documentation in esp-idf ' s app_update component.

Parameters

- `[in] https_ota_handle`: pointer to esp_https_ota_handle_t structure

bool **esp_https_ota_is_complete_data_received**(*esp_https_ota_handle_t https_ota_handle*)

Checks if complete data was received or not.

Note This API can be called just before esp_https_ota_finish() to validate if the complete image was indeed received.

Return

- false
- true

Parameters

- `[in] https_ota_handle`: pointer to esp_https_ota_handle_t structure

esp_err_t **esp_https_ota_finish**(*esp_https_ota_handle_t https_ota_handle*)

Clean-up HTTPS OTA Firmware upgrade and close HTTPS connection.

This function closes the HTTP connection and frees the ESP HTTPS OTA context. This function switches the boot partition to the OTA partition containing the new firmware image.

Note If this API returns successfully, esp_restart() must be called to boot from the new firmware image esp_https_ota_finish should not be called after calling esp_https_ota_abort

Return

- ESP_OK: Clean-up successful
- ESP_ERR_INVALID_STATE
- ESP_ERR_INVALID_ARG: Invalid argument
- ESP_ERR_OTA_VALIDATE_FAILED: Invalid app image

Parameters

- `[in] https_ota_handle`: pointer to esp_https_ota_handle_t structure

esp_err_t **esp_https_ota_abort** (*esp_https_ota_handle_t https_ota_handle*)
Clean-up HTTPS OTA Firmware upgrade and close HTTPS connection.

This function closes the HTTP connection and frees the ESP HTTPS OTA context.

Note esp_https_ota_abort should not be called after calling esp_https_ota_finish
Return
- ESP_OK: Clean-up successful
- ESP_ERR_INVALID_STATE: Invalid ESP HTTPS OTA state
- ESP_FAIL: OTA not started
- ESP_ERR_NOT_FOUND: OTA handle not found
- ESP_ERR_INVALID_ARG: Invalid argument

Parameters
- `[in] https_ota_handle`: pointer to esp_https_ota_handle_t structure

esp_err_t **esp_https_ota_get_img_desc** (*esp_https_ota_handle_t https_ota_handle*, *esp_app_desc_t *new_app_info*)
Reads app description from image header. The app description provides information like the "Firmware version" of the image.

Note This API can be called only after esp_https_ota_begin() and before esp_https_ota_perform(). Calling this API is not mandatory.
Return
- ESP_ERR_INVALID_ARG: Invalid arguments
- ESP_FAIL: Failed to read image descriptor
- ESP_OK: Successfully read image descriptor

Parameters
- `[in] https_ota_handle`: pointer to esp_https_ota_handle_t structure
- `[out] new_app_info`: pointer to an allocated *esp_app_desc_t* structure

int **esp_https_ota_get_image_len_read** (*esp_https_ota_handle_t https_ota_handle*)
This function returns OTA image data read so far.

Note This API should be called only if `esp_https_ota_perform()` has been called atleast once or if `esp_https_ota_get_img_desc` has been called before.
Return
- -1 On failure
- total bytes read so far

Parameters
- `[in] https_ota_handle`: pointer to esp_https_ota_handle_t structure

Structures

struct esp_https_ota_config_t
ESP HTTPS OTA configuration.

Public Members

const *esp_http_client_config_t* ***http_config**
ESP HTTP client configuration

http_client_init_cb_t **http_client_init_cb**
Callback after ESP HTTP client is initialised

bool **bulk_flash_erase**
Erase entire flash partition during initialization. By default flash partition is erased during write operation and in chunk of 4K sector size

Macros

ESP_ERR_HTTPS_OTA_BASE
ESP_ERR_HTTPS_OTA_IN_PROGRESS

Type Definitions

typedef void ***esp_https_ota_handle_t**

typedef *esp_err_t* (***http_client_init_cb_t**)(*esp_http_client_handle_t*)

2.7.8 ESP-pthread

Overview

This module offers Espressif specific extensions to the pthread library that can be used to influence the behaviour of pthreads. Currently the following configuration can be tuned:

- Stack size of the pthreads
- Priority of the created pthreads
- Inheriting this configuration across threads
- Thread name
- Core affinity / core pinning.

Example to tune the stack size of the pthread:

```
void * thread_func(void * p)
{
    printf("In thread_func\n");
    return NULL;
}

void app_main(void)
{
    pthread_t t1;

    esp_pthread_cfg_t cfg = esp_create_default_pthread_config();
    cfg.stack_size = (4 * 1024);
    esp_pthread_set_cfg(&cfg);

    pthread_create(&t1, NULL, thread_func, NULL);
}
```

The API can also be used for inheriting the settings across threads. For example:

```
void * my_thread2(void * p)
{
    /* This thread will inherit the stack size of 4K */
    printf("In my_thread2\n");

    return NULL;
}

void * my_thread1(void * p)
{
    printf("In my_thread1\n");
    pthread_t t2;
    pthread_create(&t2, NULL, my_thread2, NULL);

    return NULL;
}

void app_main(void)
{
    pthread_t t1;

    esp_pthread_cfg_t cfg = esp_create_default_pthread_config();
    cfg.stack_size = (4 * 1024);
```

(下页继续)

(续上页)

```
    cfg.inherit_cfg = true;
    esp_pthread_set_cfg(&cfg);

    pthread_create(&t1, NULL, my_thread1, NULL);
}
```

API Reference

Header File

- pthread/include/esp_pthread.h

Functions

esp_pthread_cfg_t **esp_pthread_get_default_config**(void)

Creates a default pthread configuration based on the values set via menuconfig.

Return A default configuration structure.

esp_err_t **esp_pthread_set_cfg**(**const** *esp_pthread_cfg_t* **cfg*)

Configure parameters for creating pthread.

This API allows you to configure how the subsequent pthread_create() call will behave. This call can be used to setup configuration parameters like stack size, priority, configuration inheritance etc.

If the 'inherit' flag in the configuration structure is enabled, then the same configuration is also inherited in the thread subtree.

Note Passing non-NULL attributes to pthread_create() will override the stack_size parameter set using this API

Return

- ESP_OK if configuration was successfully set
- ESP_ERR_NO_MEM if out of memory
- ESP_ERR_INVALID_ARG if stack_size is less than PTHREAD_STACK_MIN

Parameters

- `cfg`: The pthread config parameters

esp_err_t **esp_pthread_get_cfg**(*esp_pthread_cfg_t* **p*)

Get current pthread creation configuration.

This will retrieve the current configuration that will be used for creating threads.

Return

- ESP_OK if the configuration was available
- ESP_ERR_NOT_FOUND if a configuration wasn't previously set

Parameters

- `p`: Pointer to the pthread config structure that will be updated with the currently configured parameters

esp_err_t **esp_pthread_init**(void)

Initialize pthread library.

Structures

struct esp_pthread_cfg_t

pthread configuration structure that influences pthread creation

Public Members

size_t **stack_size**

The stack size of the pthread.

size_t **prio**
: The thread’ s priority.

bool **inherit_cfg**
: Inherit this configuration further.

const char ***thread_name**
: The thread name.

int **pin_to_core**
: The core id to pin the thread to. Has the same value range as xCoreId argument of xTaskCreatePinnedToCore.

Macros

PTHREAD_STACK_MIN

2.7.9 Event Loop Library

Overview

The event loop library allows components to declare events to which other components can register handlers –code which will execute when those events occur. This allows loosely coupled components to attach desired behavior to changes in state of other components without application involvement. For instance, a high level connection handling library may subscribe to events produced by the wifi subsystem directly and act on those events. This also simplifies event processing by serializing and deferring code execution to another context.

Using esp_event APIs

There are two objects of concern for users of this library: events and event loops.

Events are occurrences of note. For example, for WiFi, a successful connection to the access point may be an event. Events are referenced using a two part identifier which are discussed more *here*. Event loops are the vehicle by which events get posted by event sources and handled by event handler functions. These two appear prominently in the event loop library APIs.

Using this library roughly entails the following flow:

1. A user defines a function that should run when an event is posted to a loop. This function is referred to as the event handler. It should have the same signature as *esp_event_handler_t*.
2. An event loop is created using *esp_event_loop_create()*, which outputs a handle to the loop of type *esp_event_loop_handle_t*. Event loops created using this API are referred to as user event loops. There is, however, a special type of event loop called the default event loop which are discussed *here*.
3. Components register event handlers to the loop using *esp_event_handler_register_with()*. Handlers can be registered with multiple loops, more on that *here*.
4. Event sources post an event to the loop using *esp_event_post_to()*.
5. Components wanting to remove their handlers from being called can do so by unregistering from the loop using *esp_event_handler_unregister_with()*.
6. Event loops which are no longer needed can be deleted using *esp_event_loop_delete()*.

In code, the flow above may look like as follows:

```
// 1. Define the event handler
void run_on_event(void* handler_arg, esp_event_base_t base, int32_t id, void*␣
↪event_data)
{
    // Event handler logic
}

void app_main()
```

(下页继续)

(续上页)

```
{
    // 2. A configuration structure of type esp_event_loop_args_t is needed to␣
↪specify the properties of the loop to be
    // created. A handle of type esp_event_loop_handle_t is obtained, which is␣
↪needed by the other APIs to reference the loop
    // to perform their operations on.
    esp_event_loop_args_t loop_args = {
        .queue_size = ...,
        .task_name = ...
        .task_priority = ...,
        .task_stack_size = ...,
        .task_core_id = ...
    };

    esp_event_loop_handle_t loop_handle;

    esp_event_loop_create(&loop_args, &loop_handle);

    // 3. Register event handler defined in (1). MY_EVENT_BASE and MY_EVENT_ID␣
↪specifies a hypothetical
    // event that handler run_on_event should execute on when it gets posted to␣
↪the loop.
    esp_event_handler_register_with(loop_handle, MY_EVENT_BASE, MY_EVENT_ID, run_
↪on_event, ...);

    ...

    // 4. Post events to the loop. This queues the event on the event loop. At␣
↪some point in time
    // the event loop executes the event handler registered to the posted event,␣
↪in this case run_on_event.
    // For simplicity sake this example calls esp_event_post_to from app_main, but␣
↪posting can be done from
    // any other tasks (which is the more interesting use case).
    esp_event_post_to(loop_handle, MY_EVENT_BASE, MY_EVENT_ID, ...);

    ...

    // 5. Unregistering an unneeded handler
    esp_event_handler_unregister_with(loop_handle, MY_EVENT_BASE, MY_EVENT_ID, run_
↪on_event);

    ...

    // 6. Deleting an unneeded event loop
    esp_event_loop_delete(loop_handle);
}
```

Declaring and defining events

As mentioned previously, events consists of two-part identifers: the event base and the event ID. The event base identifies an independent group of events; the event ID identifies the event within that group. Think of the event base and event ID as a person's last name and first name, respectively. A last name identifies a family, and the first name identifies a person within that family.

The event loop library provides macros to declare and define the event base easily.

Event base declaration:

```
ESP_EVENT_DECLARE_BASE(EVENT_BASE)
```

Event base definition:

```
ESP_EVENT_DEFINE_BASE(EVENT_BASE)
```

注解： In IDF, the base identifiers for system events are uppercase and are postfixed with _EVENT. For example, the base for wifi events is declared and defined as WIFI_EVENT, the ethernet event base ETHERNET_EVENT, and so on. The purpose is to have event bases look like constants (although they are global variables considering the defintions of macros ESP_EVENT_DECLARE_BASE and ESP_EVENT_DEFINE_BASE).

For event ID's, declaring them as enumerations is recommended. Once again, for visibility, these are typically placed in public header files.

Event ID:

```
enum {
    EVENT_ID_1,
    EVENT_ID_2,
    EVENT_ID_3,
    ...
}
```

Default Event Loop

The default event loop is a special type of loop used for system events (WiFi events, for example). The handle for this loop is hidden from the user. The creation, deletion, handler registration/unregistration and posting of events is done through a variant of the APIs for user event loops. The table below enumerates those variants, and the user event loops equivalent.

User Event Loops	Default Event Loops
esp_event_loop_create()	*esp_event_loop_create_default()*
esp_event_loop_delete()	*esp_event_loop_delete_default()*
esp_event_handler_register_with()	*esp_event_handler_register()*
esp_event_handler_unregister_with()	*esp_event_handler_unregister()*
esp_event_post_to()	*esp_event_post()*

If you compare the signatures for both, they are mostly similar except the for the lack of loop handle specification for the default event loop APIs.

Other than the API difference and the special designation to which system events are posted to, there is no difference to how default event loops and user event loops behave. It is even possible for users to post their own events to the default event loop, should the user opt to not create their own loops to save memory.

Notes on Handler Registration

It is possible to register a single handler to multiple events individually, i.e. using multiple calls to *esp_event_handler_register_with()*. For those multiple calls, the specific event base and event ID can be specified with which the handler should execute.

However, in some cases it is desirable for a handler to execute on (1) all events that get posted to a loop or (2) all events of a particular base identifier. This is possible using the special event base identifier ESP_EVENT_ANY_BASE and special event ID ESP_EVENT_ANY_ID. These special identifiers may be passed as the event base and event ID arguments for *esp_event_handler_register_with()*.

Therefore, the valid arguments to *esp_event_handler_register_with()* are:

1. <event base>, <event ID> - handler executes when the event with base <event base> and event ID <event ID> gets posted to the loop

2. <event base>, ESP_EVENT_ANY_ID - handler executes when any event with base <event base> gets posted to the loop
3. ESP_EVENT_ANY_BASE, ESP_EVENT_ANY_ID - handler executes when any event gets posted to the loop

As an example, suppose the following handler registrations were performed:

```
esp_event_handler_register_with(loop_handle, MY_EVENT_BASE, MY_EVENT_ID, run_on_
↪event_1, ...);
esp_event_handler_register_with(loop_handle, MY_EVENT_BASE, ESP_EVENT_ANY_ID, run_
↪on_event_2, ...);
esp_event_handler_register_with(loop_handle, ESP_EVENT_ANY_BASE, ESP_EVENT_ANY_ID,␣
↪run_on_event_3, ...);
```

If the hypothetical event `MY_EVENT_BASE`, `MY_EVENT_ID` is posted, all three handlers `run_on_event_1`, `run_on_event_2`, and `run_on_event_3` would execute.

If the hypothetical event `MY_EVENT_BASE`, `MY_OTHER_EVENT_ID` is posted, only `run_on_event_2` and `run_on_event_3` would execute.

If the hypothetical event `MY_OTHER_EVENT_BASE`, `MY_OTHER_EVENT_ID` is posted, only `run_on_event_3` would execute.

Handler Registration and Handler Dispatch Order The general rule is that for handlers that match a certain posted event during dispatch, those which are registered first also gets executed first. The user can then control which handlers get executed first by registering them before other handlers, provided that all registrations are performed using a single task. If the user plans to take advantage of this behavior, caution must be exercised if there are multiple tasks registering handlers. While the 'first registered, first executed' behavior still holds true, the task which gets executed first will also get their handlers registered first. Handlers registered one after the other by a single task will still be dispatched in the order relative to each other, but if that task gets pre-empted in between registration by another task which also registers handlers; then during dispatch those handlers will also get executed in between.

Event loop profiling

A configuration option *CONFIG_ESP_EVENT_LOOP_PROFILING* can be enabled in order to activate statistics collection for all event loops created. The function `esp_event_dump()` can be used to output the collected statistics to a file stream. More details on the information included in the dump can be found in the `esp_event_dump()` API Reference.

Application Example

Examples on using the `esp_event` library can be found in system/esp_event. The examples cover event declaration, loop creation, handler registration and unregistration and event posting.

Other examples which also adopt esp_event library:

- NMEA Parser , which will decode the statements received from GPS.

API Reference

Header File

- esp_event/include/esp_event.h

Functions

esp_err_t **esp_event_loop_create**(**const** *esp_event_loop_args_t* **event_loop_args*, *esp_event_loop_handle_t* **event_loop*)

Create a new event loop.

Return

- ESP_OK: Success
- ESP_ERR_INVALID_ARG: event_loop_args or event_loop was NULL
- ESP_ERR_NO_MEM: Cannot allocate memory for event loops list
- ESP_FAIL: Failed to create task loop
- Others: Fail

Parameters

- `[in] event_loop_args`: configuration structure for the event loop to create
- `[out] event_loop`: handle to the created event loop

esp_err_t **esp_event_loop_delete**(*esp_event_loop_handle_t event_loop*)

Delete an existing event loop.

Return

- ESP_OK: Success
- Others: Fail

Parameters

- `[in] event_loop`: event loop to delete, must not be NULL

esp_err_t **esp_event_loop_create_default**(void)

Create default event loop.

Return

- ESP_OK: Success
- ESP_ERR_NO_MEM: Cannot allocate memory for event loops list
- ESP_FAIL: Failed to create task loop
- Others: Fail

esp_err_t **esp_event_loop_delete_default**(void)

Delete the default event loop.

Return

- ESP_OK: Success
- Others: Fail

esp_err_t **esp_event_loop_run**(*esp_event_loop_handle_t event_loop*, TickType_t *ticks_to_run*)

Dispatch events posted to an event loop.

This function is used to dispatch events posted to a loop with no dedicated task, i.e task name was set to NULL in event_loop_args argument during loop creation. This function includes an argument to limit the amount of time it runs, returning control to the caller when that time expires (or some time afterwards). There is no guarantee that a call to this function will exit at exactly the time of expiry. There is also no guarantee that events have been dispatched during the call, as the function might have spent all of the alloted time waiting on the event queue. Once an event has been unqueued, however, it is guaranteed to be dispatched. This guarantee contributes to not being able to exit exactly at time of expiry as (1) blocking on internal mutexes is necessary for dispatching the unqueued event, and (2) during dispatch of the unqueued event there is no way to control the time occupied by handler code execution. The guaranteed time of exit is therefore the alloted time + amount of time required to dispatch the last unqueued event.

In cases where waiting on the queue times out, ESP_OK is returned and not ESP_ERR_TIMEOUT, since it is normal behavior.

Note encountering an unknown event that has been posted to the loop will only generate a warning, not an error.

Return

- ESP_OK: Success
- Others: Fail

Parameters

- `[in] event_loop`: event loop to dispatch posted events from, must not be NULL
- `[in] ticks_to_run`: number of ticks to run the loop

esp_err_t **esp_event_handler_register**(*esp_event_base_t event_base*, int32_t *event_id*, *esp_event_handler_t event_handler*, void **event_handler_arg*)

Register an event handler to the system event loop (legacy).

This function can be used to register a handler for either: (1) specific events, (2) all events of a certain event base, or (3) all events known by the system event loop.

Note This function is obsolete and will be deprecated soon, please use esp_event_handler_instance_register() instead.

- specific events: specify exact event_base and event_id
- all events of a certain base: specify exact event_base and use ESP_EVENT_ANY_ID as the event_id
- all events known by the loop: use ESP_EVENT_ANY_BASE for event_base and ESP_EVENT_ANY_ID as the event_id

Registering multiple handlers to events is possible. Registering a single handler to multiple events is also possible. However, registering the same handler to the same event multiple times would cause the previous registrations to be overwritten.

Note the event loop library does not maintain a copy of event_handler_arg, therefore the user should ensure that event_handler_arg still points to a valid location by the time the handler gets called

Return

- ESP_OK: Success
- ESP_ERR_NO_MEM: Cannot allocate memory for the handler
- ESP_ERR_INVALID_ARG: Invalid combination of event base and event id
- Others: Fail

Parameters

- `[in] event_base`: the base id of the event to register the handler for
- `[in] event_id`: the id of the event to register the handler for
- `[in] event_handler`: the handler function which gets called when the event is dispatched
- `[in] event_handler_arg`: data, aside from event data, that is passed to the handler when it is called

esp_err_t **esp_event_handler_register_with**(*esp_event_loop_handle_t event_loop*, *esp_event_base_t event_base*, int32_t *event_id*, *esp_event_handler_t event_handler*, void **event_handler_arg*)

Register an event handler to a specific loop (legacy).

This function behaves in the same manner as esp_event_handler_register, except the additional specification of the event loop to register the handler to.

Note This function is obsolete and will be deprecated soon, please use esp_event_handler_instance_register_with() instead.

Note the event loop library does not maintain a copy of event_handler_arg, therefore the user should ensure that event_handler_arg still points to a valid location by the time the handler gets called

Return

- ESP_OK: Success
- ESP_ERR_NO_MEM: Cannot allocate memory for the handler
- ESP_ERR_INVALID_ARG: Invalid combination of event base and event id
- Others: Fail

Parameters

- `[in] event_loop`: the event loop to register this handler function to, must not be NULL
- `[in] event_base`: the base id of the event to register the handler for
- `[in] event_id`: the id of the event to register the handler for
- `[in] event_handler`: the handler function which gets called when the event is dispatched
- `[in] event_handler_arg`: data, aside from event data, that is passed to the handler when it is called

esp_err_t **esp_event_handler_instance_register_with**(*esp_event_loop_handle_t event_loop*, *esp_event_base_t event_base*, int32_t *event_id*, *esp_event_handler_t event_handler*, void **event_handler_arg*, *esp_event_handler_instance_t *instance*)

Register an instance of event handler to a specific loop.

This function can be used to register a handler for either: (1) specific events, (2) all events of a certain event base, or (3) all events known by the system event loop.

- specific events: specify exact event_base and event_id
- all events of a certain base: specify exact event_base and use ESP_EVENT_ANY_ID as the event_id
- all events known by the loop: use ESP_EVENT_ANY_BASE for event_base and ESP_EVENT_ANY_ID as the event_id

Besides the error, the function returns an instance object as output parameter to identify each registration. This is necessary to remove (unregister) the registration before the event loop is deleted.

Registering multiple handlers to events, registering a single handler to multiple events as well as registering the same handler to the same event multiple times is possible. Each registration yields a distinct instance object which identifies it over the registration lifetime.

Note the event loop library does not maintain a copy of event_handler_arg, therefore the user should ensure that event_handler_arg still points to a valid location by the time the handler gets called

Return

- ESP_OK: Success
- ESP_ERR_NO_MEM: Cannot allocate memory for the handler
- ESP_ERR_INVALID_ARG: Invalid combination of event base and event id or instance is NULL
- Others: Fail

Parameters

- `[in] event_loop`: the event loop to register this handler function to, must not be NULL
- `[in] event_base`: the base id of the event to register the handler for
- `[in] event_id`: the id of the event to register the handler for
- `[in] event_handler`: the handler function which gets called when the event is dispatched
- `[in] event_handler_arg`: data, aside from event data, that is passed to the handler when it is called
- `[out] instance`: An event handler instance object related to the registered event handler and data, can be NULL. This needs to be kept if the specific callback instance should be unregistered before deleting the whole event loop. Registering the same event handler multiple times is possible and yields distinct instance objects. The data can be the same for all registrations. If no unregistration is needed but the handler should be deleted when the event loop is deleted, instance can be NULL.

esp_err_t **esp_event_handler_instance_register**(*esp_event_base_t event_base*, int32_t *event_id*, *esp_event_handler_t event_handler*, void **event_handler_arg*, *esp_event_handler_instance_t *instance*)

Register an instance of event handler to the default loop.

This function does the same as esp_event_handler_instance_register_with, except that it registers the handler to the default event loop.

Note the event loop library does not maintain a copy of event_handler_arg, therefore the user should ensure that event_handler_arg still points to a valid location by the time the handler gets called

Return

- ESP_OK: Success
- ESP_ERR_NO_MEM: Cannot allocate memory for the handler
- ESP_ERR_INVALID_ARG: Invalid combination of event base and event id or instance is NULL
- Others: Fail

Parameters

- `[in] event_base`: the base id of the event to register the handler for

- `[in] event_id`: the id of the event to register the handler for
- `[in] event_handler`: the handler function which gets called when the event is dispatched
- `[in] event_handler_arg`: data, aside from event data, that is passed to the handler when it is called
- `[out] instance`: An event handler instance object related to the registered event handler and data, can be NULL. This needs to be kept if the specific callback instance should be unregistered before deleting the whole event loop. Registering the same event handler multiple times is possible and yields distinct instance objects. The data can be the same for all registrations. If no unregistration is needed but the handler should be deleted when the event loop is deleted, instance can be NULL.

esp_err_t **esp_event_handler_unregister**(*esp_event_base_t event_base*, int32_t *event_id*, *esp_event_handler_t event_handler*)

Unregister a handler with the system event loop (legacy).

Unregisters a handler so it will no longer be called during dispatch. Handlers can be unregistered for any combination of event_base and event_id which were previously registered. To unregister a handler, the event_base and event_id arguments must match exactly the arguments passed to esp_event_handler_register() when that handler was registered. Passing ESP_EVENT_ANY_BASE and/or ESP_EVENT_ANY_ID will only unregister handlers that were registered with the same wildcard arguments.

Note This function is obsolete and will be deprecated soon, please use esp_event_handler_instance_unregister() instead.

Note When using ESP_EVENT_ANY_ID, handlers registered to specific event IDs using the same base will not be unregistered. When using ESP_EVENT_ANY_BASE, events registered to specific bases will also not be unregistered. This avoids accidental unregistration of handlers registered by other users or components.

Return ESP_OK success

Return ESP_ERR_INVALID_ARG invalid combination of event base and event id

Return others fail

Parameters

- `[in] event_base`: the base of the event with which to unregister the handler
- `[in] event_id`: the id of the event with which to unregister the handler
- `[in] event_handler`: the handler to unregister

esp_err_t **esp_event_handler_unregister_with**(*esp_event_loop_handle_t event_loop*, *esp_event_base_t event_base*, int32_t *event_id*, *esp_event_handler_t event_handler*)

Unregister a handler from a specific event loop (legacy).

This function behaves in the same manner as esp_event_handler_unregister, except the additional specification of the event loop to unregister the handler with.

Note This function is obsolete and will be deprecated soon, please use esp_event_handler_instance_unregister_with() instead.

Return

- ESP_OK: Success
- ESP_ERR_INVALID_ARG: Invalid combination of event base and event id
- Others: Fail

Parameters

- `[in] event_loop`: the event loop with which to unregister this handler function, must not be NULL
- `[in] event_base`: the base of the event with which to unregister the handler
- `[in] event_id`: the id of the event with which to unregister the handler
- `[in] event_handler`: the handler to unregister

esp_err_t **esp_event_handler_instance_unregister_with**(*esp_event_loop_handle_t event_loop*, *esp_event_base_t event_base*, int32_t *event_id*, *esp_event_handler_instance_t instance*)

Unregister a handler instance from a specific event loop.

Unregisters a handler instance so it will no longer be called during dispatch. Handler instances can be unregistered for any combination of event_base and event_id which were previously registered. To unregister a handler instance, the event_base and event_id arguments must match exactly the arguments passed to esp_event_handler_instance_register() when that handler instance was registered. Passing ESP_EVENT_ANY_BASE and/or ESP_EVENT_ANY_ID will only unregister handler instances that were registered with the same wildcard arguments.

Note When using ESP_EVENT_ANY_ID, handlers registered to specific event IDs using the same base will not be unregistered. When using ESP_EVENT_ANY_BASE, events registered to specific bases will also not be unregistered. This avoids accidental unregistration of handlers registered by other users or components.

Return

- ESP_OK: Success
- ESP_ERR_INVALID_ARG: Invalid combination of event base and event id
- Others: Fail

Parameters

- `[in] event_loop`: the event loop with which to unregister this handler function, must not be NULL
- `[in] event_base`: the base of the event with which to unregister the handler
- `[in] event_id`: the id of the event with which to unregister the handler
- `[in] instance`: the instance object of the registration to be unregistered

esp_err_t **esp_event_handler_instance_unregister**(*esp_event_base_t event_base*, int32_t *event_id*, *esp_event_handler_instance_t instance*)

Unregister a handler from the system event loop.

This function does the same as esp_event_handler_instance_unregister_with, except that it unregisters the handler instance from the default event loop.

Return

- ESP_OK: Success
- ESP_ERR_INVALID_ARG: Invalid combination of event base and event id
- Others: Fail

Parameters

- `[in] event_base`: the base of the event with which to unregister the handler
- `[in] event_id`: the id of the event with which to unregister the handler
- `[in] instance`: the instance object of the registration to be unregistered

esp_err_t **esp_event_post**(*esp_event_base_t event_base*, int32_t *event_id*, void **event_data*, size_t *event_data_size*, TickType_t *ticks_to_wait*)

Posts an event to the system default event loop. The event loop library keeps a copy of event_data and manages the copy' s lifetime automatically (allocation + deletion); this ensures that the data the handler recieves is always valid.

Return

- ESP_OK: Success
- ESP_ERR_TIMEOUT: Time to wait for event queue to unblock expired, queue full when posting from ISR
- ESP_ERR_INVALID_ARG: Invalid combination of event base and event id
- Others: Fail

Parameters

- `[in] event_base`: the event base that identifies the event
- `[in] event_id`: the event id that identifies the event
- `[in] event_data`: the data, specific to the event occurence, that gets passed to the handler
- `[in] event_data_size`: the size of the event data
- `[in] ticks_to_wait`: number of ticks to block on a full event queue

esp_err_t **esp_event_post_to**(*esp_event_loop_handle_t event_loop*, *esp_event_base_t event_base*, int32_t *event_id*, void **event_data*, size_t *event_data_size*, TickType_t *ticks_to_wait*)

Posts an event to the specified event loop. The event loop library keeps a copy of event_data and manages the

copy’ s lifetime automatically (allocation + deletion); this ensures that the data the handler recieves is always valid.

This function behaves in the same manner as esp_event_post_to, except the additional specification of the event loop to post the event to.

Return

- ESP_OK: Success
- ESP_ERR_TIMEOUT: Time to wait for event queue to unblock expired, queue full when posting from ISR
- ESP_ERR_INVALID_ARG: Invalid combination of event base and event id
- Others: Fail

Parameters

- `[in] event_loop`: the event loop to post to, must not be NULL
- `[in] event_base`: the event base that identifies the event
- `[in] event_id`: the event id that identifies the event
- `[in] event_data`: the data, specific to the event occurence, that gets passed to the handler
- `[in] event_data_size`: the size of the event data
- `[in] ticks_to_wait`: number of ticks to block on a full event queue

esp_err_t **esp_event_isr_post**(*esp_event_base_t event_base*, int32_t *event_id*, void **event_data*, size_t *event_data_size*, BaseType_t **task_unblocked*)

Special variant of esp_event_post for posting events from interrupt handlers.

Note this function is only available when CONFIG_ESP_EVENT_POST_FROM_ISR is enabled

Note when this function is called from an interrupt handler placed in IRAM, this function should be placed in IRAM as well by enabling CONFIG_ESP_EVENT_POST_FROM_IRAM_ISR

Return

- ESP_OK: Success
- ESP_FAIL: Event queue for the default event loop full
- ESP_ERR_INVALID_ARG: Invalid combination of event base and event id, data size of more than 4 bytes
- Others: Fail

Parameters

- `[in] event_base`: the event base that identifies the event
- `[in] event_id`: the event id that identifies the event
- `[in] event_data`: the data, specific to the event occurence, that gets passed to the handler
- `[in] event_data_size`: the size of the event data; max is 4 bytes
- `[out] task_unblocked`: an optional parameter (can be NULL) which indicates that an event task with higher priority than currently running task has been unblocked by the posted event; a context switch should be requested before the interrupt is existed.

esp_err_t **esp_event_isr_post_to**(*esp_event_loop_handle_t event_loop*, *esp_event_base_t event_base*, int32_t *event_id*, void **event_data*, size_t *event_data_size*, BaseType_t **task_unblocked*)

Special variant of esp_event_post_to for posting events from interrupt handlers.

Note this function is only available when CONFIG_ESP_EVENT_POST_FROM_ISR is enabled

Note when this function is called from an interrupt handler placed in IRAM, this function should be placed in IRAM as well by enabling CONFIG_ESP_EVENT_POST_FROM_IRAM_ISR

Return

- ESP_OK: Success
- ESP_FAIL: Event queue for the loop full
- ESP_ERR_INVALID_ARG: Invalid combination of event base and event id, data size of more than 4 bytes
- Others: Fail

Parameters

- `[in] event_loop`: the event loop to post to, must not be NULL
- `[in] event_base`: the event base that identifies the event
- `[in] event_id`: the event id that identifies the event
- `[in] event_data`: the data, specific to the event occurence, that gets passed to the handler

- [in] event_data_size: the size of the event data
- [out] task_unblocked: an optional parameter (can be NULL) which indicates that an event task with higher priority than currently running task has been unblocked by the posted event; a context switch should be requested before the interrupt is existed.

esp_err_t **esp_event_dump**(FILE **file*)

Dumps statistics of all event loops.

Dumps event loop info in the format:

```
      event loop
          handler
          handler
          ...
      event loop
          handler
          handler
          ...

 where:

  event loop
      format: address,name rx:total_recieved dr:total_dropped
      where:
          address - memory address of the event loop
          name - name of the event loop, 'none' if no dedicated task
          total_recieved - number of successfully posted events
          total_dropped - number of events unsuccessfully posted due to queue␣
↪being full

  handler
      format: address ev:base,id inv:total_invoked run:total_runtime
      where:
          address - address of the handler function
          base,id - the event specified by event base and id this handler␣
↪executes
          total_invoked - number of times this handler has been invoked
          total_runtime - total amount of time used for invoking this handler
```

Note this function is a noop when CONFIG_ESP_EVENT_LOOP_PROFILING is disabled

Return

- ESP_OK: Success
- ESP_ERR_NO_MEM: Cannot allocate memory for event loops list
- Others: Fail

Parameters

- [in] file: the file stream to output to

Structures

struct esp_event_loop_args_t

Configuration for creating event loops.

Public Members

int32_t **queue_size**

size of the event loop queue

const char ***task_name**

name of the event loop task; if NULL, a dedicated task is not created for event loop

UBaseType_t **task_priority**

priority of the event loop task, ignored if task name is NULL

uint32_t **task_stack_size**
stack size of the event loop task, ignored if task name is NULL

BaseType_t **task_core_id**
core to which the event loop task is pinned to, ignored if task name is NULL

Header File

- esp_event/include/esp_event_base.h

Macros

ESP_EVENT_DECLARE_BASE(id)
ESP_EVENT_DEFINE_BASE(id)

ESP_EVENT_ANY_BASE
register handler for any event base

ESP_EVENT_ANY_ID
register handler for any event id

Type Definitions

typedef const char ***esp_event_base_t**
unique pointer to a subsystem that exposes events

typedef void ***esp_event_loop_handle_t**
a number that identifies an event with respect to a base

typedef void (***esp_event_handler_t**)(void *event_handler_arg, *esp_event_base_t* event_base, int32_t event_id, void *event_data)
function called when an event is posted to the queue

typedef void ***esp_event_handler_instance_t**
context identifying an instance of a registered event handler

Related Documents

Legacy event loop

API Reference

Header File

- esp_event/include/esp_event_legacy.h

Functions

esp_err_t **esp_event_send**(*system_event_t *event*)
Send a event to event task.

Other task/modules, such as the tcpip_adapter, can call this API to send an event to event task

Note This API is part of the legacy event system. New code should use event library API in esp_event.h

Return ESP_OK : succeed
Return others : fail
Parameters
- `event`: Event to send

esp_err_t **esp_event_send_internal**(*esp_event_base_t event_base*, int32_t *event_id*, void **event_data*, size_t *event_data_size*, TickType_t *ticks_to_wait*)

Send a event to event task.

Other task/modules, such as the tcpip_adapter, can call this API to send an event to event task

Note This API is used by WiFi Driver only.

Return ESP_OK : succeed
Return others : fail
Parameters

- `[in] event_base`: the event base that identifies the event
- `[in] event_id`: the event id that identifies the event
- `[in] event_data`: the data, specific to the event occurence, that gets passed to the handler
- `[in] event_data_size`: the size of the event data
- `[in] ticks_to_wait`: number of ticks to block on a full event queue

esp_err_t **esp_event_process_default**(*system_event_t *event*)

Default event handler for system events.

This function performs default handling of system events. When using esp_event_loop APIs, it is called automatically before invoking the user-provided callback function.

Note This API is part of the legacy event system. New code should use event library API in esp_event.h

Applications which implement a custom event loop must call this function as part of event processing.

Return ESP_OK if an event was handled successfully
Parameters

- `event`: pointer to event to be handled

void **esp_event_set_default_eth_handlers**(void)

Install default event handlers for Ethernet interface.

Note This API is part of the legacy event system. New code should use event library API in esp_event.h

void **esp_event_set_default_wifi_handlers**(void)

Install default event handlers for Wi-Fi interfaces (station and AP)

Note This API is part of the legacy event system. New code should use event library API in esp_event.h

esp_err_t **esp_event_loop_init**(*system_event_cb_t cb*, void **ctx*)

Initialize event loop.

Create the event handler and task

Note This API is part of the legacy event system. New code should use event library API in esp_event.h

Return

- ESP_OK: succeed
- others: fail

Parameters

- `cb`: application specified event callback, it can be modified by call esp_event_set_cb
- `ctx`: reserved for user

system_event_cb_t **esp_event_loop_set_cb**(*system_event_cb_t cb*, void **ctx*)

Set application specified event callback function.

Note This API is part of the legacy event system. New code should use event library API in esp_event.h
Attention 1. If cb is NULL, means application don't need to handle If cb is not NULL, it will be call when an event is received, after the default event callback is completed
Return old callback
Parameters

- `cb`: application callback function
- `ctx`: argument to be passed to callback

Unions

union system_event_info_t

#include <esp_event_legacy.h> Union of all possible system_event argument structures

Public Members

system_event_sta_connected_t **connected**
ESP32 station connected to AP

system_event_sta_disconnected_t **disconnected**
ESP32 station disconnected to AP

system_event_sta_scan_done_t **scan_done**
ESP32 station scan (APs) done

system_event_sta_authmode_change_t **auth_change**
the auth mode of AP ESP32 station connected to changed

system_event_sta_got_ip_t **got_ip**
ESP32 station got IP, first time got IP or when IP is changed

system_event_sta_wps_er_pin_t **sta_er_pin**
ESP32 station WPS enrollee mode PIN code received

system_event_sta_wps_fail_reason_t **sta_er_fail_reason**
ESP32 station WPS enrollee mode failed reason code received

system_event_sta_wps_er_success_t **sta_er_success**
ESP32 station WPS enrollee success

system_event_ap_staconnected_t **sta_connected**
a station connected to ESP32 soft-AP

system_event_ap_stadisconnected_t **sta_disconnected**
a station disconnected to ESP32 soft-AP

system_event_ap_probe_req_rx_t **ap_probereqrecved**
ESP32 soft-AP receive probe request packet

system_event_ftm_report_t **ftm_report**
Report of FTM procedure

system_event_ap_staipassigned_t **ap_staipassigned**
ESP32 soft-AP assign an IP to the station

system_event_got_ip6_t **got_ip6**
ESP32 station or ap or ethernet ipv6 addr state change to preferred

Structures

struct system_event_t

Event, as a tagged enum

Public Members

system_event_id_t **event_id**
event ID

system_event_info_t **event_info**
event information

Macros

SYSTEM_EVENT_AP_STA_GOT_IP6

Type Definitions

typedef *wifi_event_sta_wps_fail_reason_t* **system_event_sta_wps_fail_reason_t**
Argument structure of SYSTEM_EVENT_STA_WPS_ER_FAILED event

typedef *wifi_event_sta_scan_done_t* **system_event_sta_scan_done_t**
Argument structure of SYSTEM_EVENT_SCAN_DONE event

typedef *wifi_event_sta_connected_t* **system_event_sta_connected_t**
Argument structure of SYSTEM_EVENT_STA_CONNECTED event

typedef *wifi_event_sta_disconnected_t* **system_event_sta_disconnected_t**
Argument structure of SYSTEM_EVENT_STA_DISCONNECTED event

typedef *wifi_event_sta_authmode_change_t* **system_event_sta_authmode_change_t**
Argument structure of SYSTEM_EVENT_STA_AUTHMODE_CHANGE event

typedef *wifi_event_sta_wps_er_pin_t* **system_event_sta_wps_er_pin_t**
Argument structure of SYSTEM_EVENT_STA_WPS_ER_PIN event

typedef *wifi_event_sta_wps_er_success_t* **system_event_sta_wps_er_success_t**
Argument structure of SYSTEM_EVENT_STA_WPS_ER_PIN event

typedef *wifi_event_ap_staconnected_t* **system_event_ap_staconnected_t**
Argument structure of event

typedef *wifi_event_ap_stadisconnected_t* **system_event_ap_stadisconnected_t**
Argument structure of event

typedef *wifi_event_ap_probe_req_rx_t* **system_event_ap_probe_req_rx_t**
Argument structure of event

typedef *wifi_event_ftm_report_t* **system_event_ftm_report_t**
Argument structure of SYSTEM_EVENT_FTM_REPORT event

typedef ip_event_ap_staipassigned_t **system_event_ap_staipassigned_t**
Argument structure of event

typedef ip_event_got_ip_t **system_event_sta_got_ip_t**
Argument structure of event

typedef ip_event_got_ip6_t **system_event_got_ip6_t**
Argument structure of event

typedef *esp_err_t* (***system_event_handler_t**) (*esp_event_base_t* event_base, int32_t event_id, void *event_data, size_t event_data_size, TickType_t ticks_to_wait)
Event handler function type

typedef *esp_err_t* (***system_event_cb_t**) (void *ctx, *system_event_t* *event)
Application specified event callback function.

Note This API is part of the legacy event system. New code should use event library API in esp_event.h

Return
- ESP_OK: succeed
- others: fail

Parameters
- `ctx`: reserved for user
- `event`: event type defined in this file

Enumerations

enum system_event_id_t
System event types enumeration

Values:

SYSTEM_EVENT_WIFI_READY = 0
ESP32 WiFi ready

SYSTEM_EVENT_SCAN_DONE
ESP32 finish scanning AP

SYSTEM_EVENT_STA_START
ESP32 station start

SYSTEM_EVENT_STA_STOP
ESP32 station stop

SYSTEM_EVENT_STA_CONNECTED
ESP32 station connected to AP

SYSTEM_EVENT_STA_DISCONNECTED
ESP32 station disconnected from AP

SYSTEM_EVENT_STA_AUTHMODE_CHANGE
the auth mode of AP connected by ESP32 station changed

SYSTEM_EVENT_STA_GOT_IP
ESP32 station got IP from connected AP

SYSTEM_EVENT_STA_LOST_IP
ESP32 station lost IP and the IP is reset to 0

SYSTEM_EVENT_STA_BSS_RSSI_LOW
ESP32 station connected BSS rssi goes below threshold

SYSTEM_EVENT_STA_WPS_ER_SUCCESS
ESP32 station wps succeeds in enrollee mode

SYSTEM_EVENT_STA_WPS_ER_FAILED
ESP32 station wps fails in enrollee mode

SYSTEM_EVENT_STA_WPS_ER_TIMEOUT
ESP32 station wps timeout in enrollee mode

SYSTEM_EVENT_STA_WPS_ER_PIN
ESP32 station wps pin code in enrollee mode

SYSTEM_EVENT_STA_WPS_ER_PBC_OVERLAP
ESP32 station wps overlap in enrollee mode

SYSTEM_EVENT_AP_START
ESP32 soft-AP start

SYSTEM_EVENT_AP_STOP
ESP32 soft-AP stop

SYSTEM_EVENT_AP_STACONNECTED
a station connected to ESP32 soft-AP

SYSTEM_EVENT_AP_STADISCONNECTED
a station disconnected from ESP32 soft-AP

SYSTEM_EVENT_AP_STAIPASSIGNED
ESP32 soft-AP assign an IP to a connected station

SYSTEM_EVENT_AP_PROBEREQRECVED
Receive probe request packet in soft-AP interface

SYSTEM_EVENT_ACTION_TX_STATUS
Receive status of Action frame transmitted

SYSTEM_EVENT_ROC_DONE
Indicates the completion of Remain-on-Channel operation status

SYSTEM_EVENT_STA_BEACON_TIMEOUT
ESP32 station beacon timeout

SYSTEM_EVENT_FTM_REPORT
Receive report of FTM procedure

SYSTEM_EVENT_GOT_IP6
ESP32 station or ap or ethernet interface v6IP addr is preferred

SYSTEM_EVENT_ETH_START
ESP32 ethernet start

SYSTEM_EVENT_ETH_STOP
ESP32 ethernet stop

SYSTEM_EVENT_ETH_CONNECTED
ESP32 ethernet phy link up

SYSTEM_EVENT_ETH_DISCONNECTED
ESP32 ethernet phy link down

SYSTEM_EVENT_ETH_GOT_IP
ESP32 ethernet got IP from connected AP

SYSTEM_EVENT_MAX
Number of members in this enum

2.7.10 FreeRTOS

Overview

This section contains documentation of FreeRTOS types, functions, and macros. It is automatically generated from FreeRTOS header files.

注解: ESP-IDF FreeRTOS is based on the Xtensa port of FreeRTOS v10.2.0,

---

For more information about FreeRTOS features specific to ESP-IDF, see *ESP-IDF FreeRTOS SMP Changes* and *ESP-IDF FreeRTOS Additions*.

Task API

Header File

- freertos/include/freertos/task.h

Functions

BaseType_t **xTaskCreatePinnedToCore**(TaskFunction_t *pvTaskCode*, **const** char ***const** *pcName*, **const** uint32_t *usStackDepth*, void ***const** *pvParameters*, UBaseType_t *uxPriority*, *TaskHandle_t* ***const** *pvCreatedTask*, **const** BaseType_t *xCoreID*)

Create a new task with a specified affinity.

This function is similar to xTaskCreate, but allows setting task affinity in SMP system.

Return pdPASS if the task was successfully created and added to a ready list, otherwise an error code defined in the file projdefs.h

Parameters

- `pvTaskCode`: Pointer to the task entry function. Tasks must be implemented to never return (i.e. continuous loop), or should be terminated using vTaskDelete function.
- `pcName`: A descriptive name for the task. This is mainly used to facilitate debugging. Max length defined by configMAX_TASK_NAME_LEN - default is 16.
- `usStackDepth`: The size of the task stack specified as the number of bytes. Note that this differs from vanilla FreeRTOS.

- `pvParameters`: Pointer that will be used as the parameter for the task being created.
- `uxPriority`: The priority at which the task should run. Systems that include MPU support can optionally create tasks in a privileged (system) mode by setting bit portPRIVILEGE_BIT of the priority parameter. For example, to create a privileged task at priority 2 the uxPriority parameter should be set to (2 | portPRIVILEGE_BIT).
- `pvCreatedTask`: Used to pass back a handle by which the created task can be referenced.
- `xCoreID`: If the value is tskNO_AFFINITY, the created task is not pinned to any CPU, and the scheduler can run it on any core available. Values 0 or 1 indicate the index number of the CPU which the task should be pinned to. Specifying values larger than (portNUM_PROCESSORS - 1) will cause the function to fail.

static BaseType_t **xTaskCreate**(TaskFunction_t *pvTaskCode*, **const** char *__**const** *pcName*, **const** uint32_t *usStackDepth*, void *__**const** *pvParameters*, UBaseType_t *uxPriority*, *TaskHandle_t* *__**const** *pvCreatedTask*)

Create a new task and add it to the list of tasks that are ready to run.

Internally, within the FreeRTOS implementation, tasks use two blocks of memory. The first block is used to hold the task's data structures. The second block is used by the task as its stack. If a task is created using xTaskCreate() then both blocks of memory are automatically dynamically allocated inside the xTaskCreate() function. (see http://www.freertos.org/a00111.html). If a task is created using xTaskCreateStatic() then the application writer must provide the required memory. xTaskCreateStatic() therefore allows a task to be created without using any dynamic memory allocation.

See xTaskCreateStatic() for a version that does not use any dynamic memory allocation.

xTaskCreate() can only be used to create a task that has unrestricted access to the entire microcontroller memory map. Systems that include MPU support can alternatively create an MPU constrained task using xTaskCreateRestricted().

Example usage:

```
// Task to be created.
void vTaskCode( void * pvParameters )
{
 for( ;; )
 {
     // Task code goes here.
 }
}

// Function that creates a task.
void vOtherFunction( void )
{
static uint8_t ucParameterToPass;
TaskHandle_t xHandle = NULL;

 // Create the task, storing the handle.  Note that the passed parameter␣
↪ucParameterToPass
 // must exist for the lifetime of the task, so in this case is declared␣
↪static.  If it was just an
 // an automatic stack variable it might no longer exist, or at least have␣
↪been corrupted, by the time
 // the new task attempts to access it.
 xTaskCreate( vTaskCode, "NAME", STACK_SIZE, &ucParameterToPass, tskIDLE_
↪PRIORITY, &xHandle );
    configASSERT( xHandle );

 // Use the handle to delete the task.
    if( xHandle != NULL )
    {
     vTaskDelete( xHandle );
    }
}
```

Return pdPASS if the task was successfully created and added to a ready list, otherwise an error code defined in the file projdefs.h

Note If program uses thread local variables (ones specified with "__thread" keyword) then storage for them will be allocated on the task's stack.

Parameters

- `pvTaskCode`: Pointer to the task entry function. Tasks must be implemented to never return (i.e. continuous loop), or should be terminated using vTaskDelete function.
- `pcName`: A descriptive name for the task. This is mainly used to facilitate debugging. Max length defined by configMAX_TASK_NAME_LEN - default is 16.
- `usStackDepth`: The size of the task stack specified as the number of bytes. Note that this differs from vanilla FreeRTOS.
- `pvParameters`: Pointer that will be used as the parameter for the task being created.
- `uxPriority`: The priority at which the task should run. Systems that include MPU support can optionally create tasks in a privileged (system) mode by setting bit portPRIVILEGE_BIT of the priority parameter. For example, to create a privileged task at priority 2 the uxPriority parameter should be set to (2 | portPRIVILEGE_BIT).
- `pvCreatedTask`: Used to pass back a handle by which the created task can be referenced.

TaskHandle_t **xTaskCreateStaticPinnedToCore**(TaskFunction_t *pvTaskCode*, **const** char ***const** *pcName*, **const** uint32_t *ulStackDepth*, void ***const** *pvParameters*, UBaseType_t *uxPriority*, StackType_t ***const** *pxStackBuffer*, StaticTask_t ***const** *pxTaskBuffer*, **const** BaseType_t *xCoreID*)

Create a new task with a specified affinity.

This function is similar to xTaskCreateStatic, but allows specifying task affinity in an SMP system.

Return If neither pxStackBuffer or pxTaskBuffer are NULL, then the task will be created and pdPASS is returned. If either pxStackBuffer or pxTaskBuffer are NULL then the task will not be created and errCOULD_NOT_ALLOCATE_REQUIRED_MEMORY is returned.

Parameters

- `pvTaskCode`: Pointer to the task entry function. Tasks must be implemented to never return (i.e. continuous loop), or should be terminated using vTaskDelete function.
- `pcName`: A descriptive name for the task. This is mainly used to facilitate debugging. The maximum length of the string is defined by configMAX_TASK_NAME_LEN in FreeRTOSConfig.h.
- `ulStackDepth`: The size of the task stack specified as the number of bytes. Note that this differs from vanilla FreeRTOS.
- `pvParameters`: Pointer that will be used as the parameter for the task being created.
- `uxPriority`: The priority at which the task will run.
- `pxStackBuffer`: Must point to a StackType_t array that has at least ulStackDepth indexes - the array will then be used as the task's stack, removing the need for the stack to be allocated dynamically.
- `pxTaskBuffer`: Must point to a variable of type StaticTask_t, which will then be used to hold the task's data structures, removing the need for the memory to be allocated dynamically.
- `xCoreID`: If the value is tskNO_AFFINITY, the created task is not pinned to any CPU, and the scheduler can run it on any core available. Values 0 or 1 indicate the index number of the CPU which the task should be pinned to. Specifying values larger than (portNUM_PROCESSORS - 1) will cause the function to fail.

static *TaskHandle_t* **xTaskCreateStatic**(TaskFunction_t *pvTaskCode*, **const** char ***const** *pcName*, **const** uint32_t *ulStackDepth*, void ***const** *pvParameters*, UBaseType_t *uxPriority*, StackType_t ***const** *pxStackBuffer*, StaticTask_t ***const** *pxTaskBuffer*)

Create a new task and add it to the list of tasks that are ready to run.

Internally, within the FreeRTOS implementation, tasks use two blocks of memory. The first block is used to hold the task's data structures. The second block is used by the task as its stack. If a task is created using xTaskCreate() then both blocks of memory are automatically dynamically allocated inside the xTaskCreate() function. (see http://www.freertos.org/a00111.html). If a task is created using xTaskCreateStatic() then the

application writer must provide the required memory. xTaskCreateStatic() therefore allows a task to be created without using any dynamic memory allocation.

Example usage:

```
// Dimensions the buffer that the task being created will use as its stack.
// NOTE:  This is the number of bytes the stack will hold, not the number of
// words as found in vanilla FreeRTOS.
#define STACK_SIZE 200

// Structure that will hold the TCB of the task being created.
StaticTask_t xTaskBuffer;

// Buffer that the task being created will use as its stack.  Note this is
// an array of StackType_t variables.  The size of StackType_t is dependent on
// the RTOS port.
StackType_t xStack[ STACK_SIZE ];

// Function that implements the task being created.
void vTaskCode( void * pvParameters )
{
    // The parameter value is expected to be 1 as 1 is passed in the
    // pvParameters value in the call to xTaskCreateStatic().
    configASSERT( ( uint32_t ) pvParameters == 1UL );

    for( ;; )
    {
        // Task code goes here.
    }
}

// Function that creates a task.
void vOtherFunction( void )
{
    TaskHandle_t xHandle = NULL;

    // Create the task without using any dynamic memory allocation.
    xHandle = xTaskCreateStatic(
                  vTaskCode,       // Function that implements the task.
                  "NAME",          // Text name for the task.
                  STACK_SIZE,      // Stack size in bytes, not words.
                  ( void * ) 1,    // Parameter passed into the task.
                  tskIDLE_PRIORITY,// Priority at which the task is created.
                  xStack,          // Array to use as the task's stack.
                  &xTaskBuffer );  // Variable to hold the task's data␣
↪structure.

    // puxStackBuffer and pxTaskBuffer were not NULL, so the task will have
    // been created, and xHandle will be the task's handle.  Use the handle
    // to suspend the task.
    vTaskSuspend( xHandle );
}
```

Return If neither pxStackBuffer or pxTaskBuffer are NULL, then the task will be created and pdPASS is returned. If either pxStackBuffer or pxTaskBuffer are NULL then the task will not be created and errCOULD_NOT_ALLOCATE_REQUIRED_MEMORY is returned.

Note If program uses thread local variables (ones specified with "__thread" keyword) then storage for them will be allocated on the task's stack.

Parameters

- `pvTaskCode`: Pointer to the task entry function. Tasks must be implemented to never return (i.e. continuous loop), or should be terminated using vTaskDelete function.
- `pcName`: A descriptive name for the task. This is mainly used to facilitate debugging. The maximum length of the string is defined by configMAX_TASK_NAME_LEN in FreeRTOSConfig.h.

- `ulStackDepth`: The size of the task stack specified as the number of bytes. Note that this differs from vanilla FreeRTOS.
- `pvParameters`: Pointer that will be used as the parameter for the task being created.
- `uxPriority`: The priority at which the task will run.
- `pxStackBuffer`: Must point to a StackType_t array that has at least ulStackDepth indexes - the array will then be used as the task's stack, removing the need for the stack to be allocated dynamically.
- `pxTaskBuffer`: Must point to a variable of type StaticTask_t, which will then be used to hold the task's data structures, removing the need for the memory to be allocated dynamically.

void **vTaskAllocateMPURegions**(*TaskHandle_t xTask*, **const** MemoryRegion_t ***const** *pxRegions*)

void **vTaskDelete**(*TaskHandle_t xTaskToDelete*)

Remove a task from the RTOS real time kernel's management. The task being deleted will be removed from all ready, blocked, suspended and event lists.

INCLUDE_vTaskDelete must be defined as 1 for this function to be available. See the configuration section for more information.

NOTE: The idle task is responsible for freeing the kernel allocated memory from tasks that have been deleted. It is therefore important that the idle task is not starved of microcontroller processing time if your application makes any calls to vTaskDelete (). Memory allocated by the task code is not automatically freed, and should be freed before the task is deleted.

See the demo application file death.c for sample code that utilises vTaskDelete ().

Example usage:

```
void vOtherFunction( void )
{
TaskHandle_t xHandle;

    // Create the task, storing the handle.
    xTaskCreate( vTaskCode, "NAME", STACK_SIZE, NULL, tskIDLE_PRIORITY, &
↪xHandle );

    // Use the handle to delete the task.
    vTaskDelete( xHandle );
}
```

Parameters

- `xTaskToDelete`: The handle of the task to be deleted. Passing NULL will cause the calling task to be deleted.

void **vTaskDelay**(**const** TickType_t *xTicksToDelay*)

Delay a task for a given number of ticks.

Delay a task for a given number of ticks. The actual time that the task remains blocked depends on the tick rate. The constant portTICK_PERIOD_MS can be used to calculate real time from the tick rate - with the resolution of one tick period.

INCLUDE_vTaskDelay must be defined as 1 for this function to be available. See the configuration section for more information.

vTaskDelay() specifies a time at which the task wishes to unblock relative to the time at which vTaskDelay() is called. For example, specifying a block period of 100 ticks will cause the task to unblock 100 ticks after vTaskDelay() is called. vTaskDelay() does not therefore provide a good method of controlling the frequency of a periodic task as the path taken through the code, as well as other task and interrupt activity, will effect the frequency at which vTaskDelay() gets called and therefore the time at which the task next executes. See vTaskDelayUntil() for an alternative API function designed to facilitate fixed frequency execution. It does this by specifying an absolute time (rather than a relative time) at which the calling task should unblock.

Example usage:

```
void vTaskFunction( void * pvParameters )
{
// Block for 500ms.
const TickType_t xDelay = 500 / portTICK_PERIOD_MS;

    for( ;; )
    {
        // Simply toggle the LED every 500ms, blocking between each toggle.
        vToggleLED();
        vTaskDelay( xDelay );
    }
}
```

Parameters

- `xTicksToDelay`: The amount of time, in tick periods, that the calling task should block.

void **vTaskDelayUntil**(TickType_t ***const** *pxPreviousWakeTime*, **const** TickType_t *xTimeIncrement*)

Delay a task until a specified time.

INCLUDE_vTaskDelayUntil must be defined as 1 for this function to be available. See the configuration section for more information.

Delay a task until a specified time. This function can be used by periodic tasks to ensure a constant execution frequency.

This function differs from vTaskDelay () in one important aspect: vTaskDelay () will cause a task to block for the specified number of ticks from the time vTaskDelay () is called. It is therefore difficult to use vTaskDelay () by itself to generate a fixed execution frequency as the time between a task starting to execute and that task calling vTaskDelay () may not be fixed [the task may take a different path though the code between calls, or may get interrupted or preempted a different number of times each time it executes].

Whereas vTaskDelay () specifies a wake time relative to the time at which the function is called, vTaskDelayUntil () specifies the absolute (exact) time at which it wishes to unblock.

The constant portTICK_PERIOD_MS can be used to calculate real time from the tick rate - with the resolution of one tick period.

Example usage:

```
// Perform an action every 10 ticks.
void vTaskFunction( void * pvParameters )
{
TickType_t xLastWakeTime;
const TickType_t xFrequency = 10;

    // Initialise the xLastWakeTime variable with the current time.
    xLastWakeTime = xTaskGetTickCount ();
    for( ;; )
    {
        // Wait for the next cycle.
        vTaskDelayUntil( &xLastWakeTime, xFrequency );

        // Perform action here.
    }
}
```

Parameters

- `pxPreviousWakeTime`: Pointer to a variable that holds the time at which the task was last unblocked. The variable must be initialised with the current time prior to its first use (see the example below). Following this the variable is automatically updated within vTaskDelayUntil ().
- `xTimeIncrement`: The cycle time period. The task will be unblocked at time *pxPreviousWakeTime + xTimeIncrement. Calling vTaskDelayUntil with the same xTimeIncrement parameter value will cause the task to execute with a fixed interface period.

BaseType_t **xTaskAbortDelay**(*TaskHandle_t xTask*)

UBaseType_t **uxTaskPriorityGet**(**const** *TaskHandle_t xTask*)

Obtain the priority of any task.

INCLUDE_uxTaskPriorityGet must be defined as 1 for this function to be available. See the configuration section for more information.

Example usage:

```
 void vAFunction( void )
 {
 TaskHandle_t xHandle;

  // Create a task, storing the handle.
  xTaskCreate( vTaskCode, "NAME", STACK_SIZE, NULL, tskIDLE_PRIORITY, &xHandle␣
↪);

  // ...

  // Use the handle to obtain the priority of the created task.
  // It was created with tskIDLE_PRIORITY, but may have changed
  // it itself.
  if( uxTaskPriorityGet( xHandle ) != tskIDLE_PRIORITY )
  {
      // The task has changed it's priority.
  }

  // ...

  // Is our priority higher than the created task?
  if( uxTaskPriorityGet( xHandle ) < uxTaskPriorityGet( NULL ) )
  {
      // Our priority (obtained using NULL handle) is higher.
  }
}
```

Return The priority of xTask.

Parameters

- `xTask`: Handle of the task to be queried. Passing a NULL handle results in the priority of the calling task being returned.

UBaseType_t **uxTaskPriorityGetFromISR**(**const** *TaskHandle_t xTask*)

A version of uxTaskPriorityGet() that can be used from an ISR.

eTaskState **eTaskGetState**(*TaskHandle_t xTask*)

Obtain the state of any task.

States are encoded by the eTaskState enumerated type.

INCLUDE_eTaskGetState must be defined as 1 for this function to be available. See the configuration section for more information.

Return The state of xTask at the time the function was called. Note the state of the task might change between the function being called, and the functions return value being tested by the calling task.

Parameters

- `xTask`: Handle of the task to be queried.

void **vTaskGetInfo**(*TaskHandle_t xTask*, TaskStatus_t **pxTaskStatus*, BaseType_t *xGetFreeStackSpace*, *eTaskState eState*)

Populates a TaskStatus_t structure with information about a task.

configUSE_TRACE_FACILITY must be defined as 1 for this function to be available. See the configuration section for more information.

Example usage:

```
void vAFunction( void )
{
TaskHandle_t xHandle;
TaskStatus_t xTaskDetails;

   // Obtain the handle of a task from its name.
   xHandle = xTaskGetHandle( "Task_Name" );

   // Check the handle is not NULL.
   configASSERT( xHandle );

   // Use the handle to obtain further information about the task.
   vTaskGetInfo( xHandle,
                 &xTaskDetails,
                 pdTRUE, // Include the high water mark in xTaskDetails.
                 eInvalid ); // Include the task state in xTaskDetails.
}
```

Parameters

- `xTask`: Handle of the task being queried. If xTask is NULL then information will be returned about the calling task.
- `pxTaskStatus`: A pointer to the TaskStatus_t structure that will be filled with information about the task referenced by the handle passed using the xTask parameter.
- `xGetFreeStackSpace`: The TaskStatus_t structure contains a member to report the stack high water mark of the task being queried. Calculating the stack high water mark takes a relatively long time, and can make the system temporarily unresponsive - so the xGetFreeStackSpace parameter is provided to allow the high water mark checking to be skipped. The high watermark value will only be written to the TaskStatus_t structure if xGetFreeStackSpace is not set to pdFALSE;
- `eState`: The TaskStatus_t structure contains a member to report the state of the task being queried. Obtaining the task state is not as fast as a simple assignment - so the eState parameter is provided to allow the state information to be omitted from the TaskStatus_t structure. To obtain state information then set eState to eInvalid - otherwise the value passed in eState will be reported as the task state in the TaskStatus_t structure.

void **vTaskPrioritySet** (*TaskHandle_t xTask*, UBaseType_t *uxNewPriority*)

Set the priority of any task.

INCLUDE_vTaskPrioritySet must be defined as 1 for this function to be available. See the configuration section for more information.

A context switch will occur before the function returns if the priority being set is higher than the currently executing task.

Example usage:

```
void vAFunction( void )
{
TaskHandle_t xHandle;

 // Create a task, storing the handle.
 xTaskCreate( vTaskCode, "NAME", STACK_SIZE, NULL, tskIDLE_PRIORITY, &xHandle␣
↪);

 // ...

 // Use the handle to raise the priority of the created task.
 vTaskPrioritySet( xHandle, tskIDLE_PRIORITY + 1 );

 // ...

 // Use a NULL handle to raise our priority to the same value.
 vTaskPrioritySet( NULL, tskIDLE_PRIORITY + 1 );
```

(下页继续)

(续上页)

```
}
```

Parameters

- `xTask`: Handle to the task for which the priority is being set. Passing a NULL handle results in the priority of the calling task being set.
- `uxNewPriority`: The priority to which the task will be set.

void **vTaskSuspend** (*TaskHandle_t xTaskToSuspend*)

Suspend a task.

INCLUDE_vTaskSuspend must be defined as 1 for this function to be available. See the configuration section for more information.

Suspend any task. When suspended a task will never get any microcontroller processing time, no matter what its priority.

Calls to vTaskSuspend are not accumulative - i.e. calling vTaskSuspend () twice on the same task still only requires one call to vTaskResume () to ready the suspended task.

Example usage:

```
void vAFunction( void )
{
TaskHandle_t xHandle;

 // Create a task, storing the handle.
 xTaskCreate( vTaskCode, "NAME", STACK_SIZE, NULL, tskIDLE_PRIORITY, &xHandle␣
↪);

 // ...

 // Use the handle to suspend the created task.
 vTaskSuspend( xHandle );

 // ...

 // The created task will not run during this period, unless
 // another task calls vTaskResume( xHandle ).

 //...


 // Suspend ourselves.
 vTaskSuspend( NULL );

 // We cannot get here unless another task calls vTaskResume
 // with our handle as the parameter.
}
```

Parameters

- `xTaskToSuspend`: Handle to the task being suspended. Passing a NULL handle will cause the calling task to be suspended.

void **vTaskResume** (*TaskHandle_t xTaskToResume*)

Resumes a suspended task.

INCLUDE_vTaskSuspend must be defined as 1 for this function to be available. See the configuration section for more information.

A task that has been suspended by one or more calls to vTaskSuspend () will be made available for running again by a single call to vTaskResume ().

Example usage:

```
void vAFunction( void )
{
TaskHandle_t xHandle;

 // Create a task, storing the handle.
 xTaskCreate( vTaskCode, "NAME", STACK_SIZE, NULL, tskIDLE_PRIORITY, &xHandle␣
↪);

 // ...

 // Use the handle to suspend the created task.
 vTaskSuspend( xHandle );

 // ...

 // The created task will not run during this period, unless
 // another task calls vTaskResume( xHandle ).

 //...


 // Resume the suspended task ourselves.
 vTaskResume( xHandle );

 // The created task will once again get microcontroller processing
 // time in accordance with its priority within the system.
}
```

Parameters

- `xTaskToResume`: Handle to the task being readied.

BaseType_t **xTaskResumeFromISR** (*TaskHandle_t xTaskToResume*)

An implementation of vTaskResume() that can be called from within an ISR.

INCLUDE_xTaskResumeFromISR must be defined as 1 for this function to be available. See the configuration section for more information.

A task that has been suspended by one or more calls to vTaskSuspend () will be made available for running again by a single call to xTaskResumeFromISR ().

xTaskResumeFromISR() should not be used to synchronise a task with an interrupt if there is a chance that the interrupt could arrive prior to the task being suspended - as this can lead to interrupts being missed. Use of a semaphore as a synchronisation mechanism would avoid this eventuality.

Return pdTRUE if resuming the task should result in a context switch, otherwise pdFALSE. This is used by the ISR to determine if a context switch may be required following the ISR.

Parameters

- `xTaskToResume`: Handle to the task being readied.

void **vTaskSuspendAll** (void)

Suspends the scheduler without disabling interrupts.

Context switches will not occur while the scheduler is suspended.

After calling vTaskSuspendAll () the calling task will continue to execute without risk of being swapped out until a call to xTaskResumeAll () has been made.

API functions that have the potential to cause a context switch (for example, vTaskDelayUntil(), xQueueSend(), etc.) must not be called while the scheduler is suspended.

Example usage:

```
void vTask1( void * pvParameters )
{
```

(下页继续)

(续上页)

```
 for( ;; )
 {
     // Task code goes here.

     // ...

     // At some point the task wants to perform a long operation during
     // which it does not want to get swapped out.  It cannot use
     // taskENTER_CRITICAL ()/taskEXIT_CRITICAL () as the length of the
     // operation may cause interrupts to be missed - including the
     // ticks.

     // Prevent the real time kernel swapping out the task.
     vTaskSuspendAll ();

     // Perform the operation here.  There is no need to use critical
     // sections as we have all the microcontroller processing time.
     // During this time interrupts will still operate and the kernel
     // tick count will be maintained.

     // ...

     // The operation is complete.  Restart the kernel.
     xTaskResumeAll ();
 }
}
```

BaseType_t **xTaskResumeAll** (void)

Resumes scheduler activity after it was suspended by a call to vTaskSuspendAll().

xTaskResumeAll() only resumes the scheduler. It does not unsuspend tasks that were previously suspended by a call to vTaskSuspend().

Example usage:

```
void vTask1( void * pvParameters )
{
 for( ;; )
 {
     // Task code goes here.

     // ...

     // At some point the task wants to perform a long operation during
     // which it does not want to get swapped out.  It cannot use
     // taskENTER_CRITICAL ()/taskEXIT_CRITICAL () as the length of the
     // operation may cause interrupts to be missed - including the
     // ticks.

     // Prevent the real time kernel swapping out the task.
     vTaskSuspendAll ();

     // Perform the operation here.  There is no need to use critical
     // sections as we have all the microcontroller processing time.
     // During this time interrupts will still operate and the real
     // time kernel tick count will be maintained.

     // ...

     // The operation is complete.  Restart the kernel.  We want to force
     // a context switch - but there is no point if resuming the scheduler
     // caused a context switch already.
```

(下页继续)

(续上页)

```
    if( !xTaskResumeAll () )
    {
        taskYIELD ();
    }
 }
}
```

Return If resuming the scheduler caused a context switch then pdTRUE is returned, otherwise pdFALSE is returned.

TickType_t **xTaskGetTickCount**(void)
Get tick count

Return The count of ticks since vTaskStartScheduler was called.

TickType_t **xTaskGetTickCountFromISR**(void)
Get tick count from ISR

This is a version of xTaskGetTickCount() that is safe to be called from an ISR - provided that TickType_t is the natural word size of the microcontroller being used or interrupt nesting is either not supported or not being used.

Return The count of ticks since vTaskStartScheduler was called.

UBaseType_t **uxTaskGetNumberOfTasks**(void)
Get current number of tasks

Return The number of tasks that the real time kernel is currently managing. This includes all ready, blocked and suspended tasks. A task that has been deleted but not yet freed by the idle task will also be included in the count.

char ***pcTaskGetName**(*TaskHandle_t xTaskToQuery*)
Get task name

Return The text (human readable) name of the task referenced by the handle xTaskToQuery. A task can query its own name by either passing in its own handle, or by setting xTaskToQuery to NULL.

TaskHandle_t **xTaskGetHandle**(**const** char **pcNameToQuery*)

Note This function takes a relatively long time to complete and should be used sparingly.
Return The handle of the task that has the human readable name pcNameToQuery. NULL is returned if no matching name is found. INCLUDE_xTaskGetHandle must be set to 1 in FreeRTOSConfig.h for pcTaskGetHandle() to be available.

UBaseType_t **uxTaskGetStackHighWaterMark**(*TaskHandle_t xTask*)
Returns the high water mark of the stack associated with xTask.

INCLUDE_uxTaskGetStackHighWaterMark must be set to 1 in FreeRTOSConfig.h for this function to be available.

Returns the high water mark of the stack associated with xTask. That is, the minimum free stack space there has been (in bytes not words, unlike vanilla FreeRTOS) since the task started. The smaller the returned number the closer the task has come to overflowing its stack.

uxTaskGetStackHighWaterMark() and uxTaskGetStackHighWaterMark2() are the same except for their return type. Using configSTACK_DEPTH_TYPE allows the user to determine the return type. It gets around the problem of the value overflowing on 8-bit types without breaking backward compatibility for applications that expect an 8-bit return type.

Return The smallest amount of free stack space there has been (in bytes not words, unlike vanilla FreeRTOS) since the task referenced by xTask was created.
Parameters
- `xTask`: Handle of the task associated with the stack to be checked. Set xTask to NULL to check the stack of the calling task.

configSTACK_DEPTH_TYPE **uxTaskGetStackHighWaterMark2** (*TaskHandle_t xTask*)

Returns the start of the stack associated with xTask.

INCLUDE_uxTaskGetStackHighWaterMark2 must be set to 1 in FreeRTOSConfig.h for this function to be available.

Returns the high water mark of the stack associated with xTask. That is, the minimum free stack space there has been (in words, so on a 32 bit machine a value of 1 means 4 bytes) since the task started. The smaller the returned number the closer the task has come to overflowing its stack.

uxTaskGetStackHighWaterMark() and uxTaskGetStackHighWaterMark2() are the same except for their return type. Using configSTACK_DEPTH_TYPE allows the user to determine the return type. It gets around the problem of the value overflowing on 8-bit types without breaking backward compatibility for applications that expect an 8-bit return type.

Return The smallest amount of free stack space there has been (in words, so actual spaces on the stack rather than bytes) since the task referenced by xTask was created.

Parameters

- `xTask`: Handle of the task associated with the stack to be checked. Set xTask to NULL to check the stack of the calling task.

uint8_t ***pxTaskGetStackStart** (*TaskHandle_t xTask*)

Returns the start of the stack associated with xTask.

INCLUDE_pxTaskGetStackStart must be set to 1 in FreeRTOSConfig.h for this function to be available.

Returns the lowest stack memory address, regardless of whether the stack grows up or down.

Return A pointer to the start of the stack.

Parameters

- `xTask`: Handle of the task associated with the stack returned. Set xTask to NULL to return the stack of the calling task.

void **vTaskSetApplicationTaskTag** (*TaskHandle_t xTask*, *TaskHookFunction_t pxHookFunction*)

Sets pxHookFunction to be the task hook function used by the task xTask.

Parameters

- `xTask`: Handle of the task to set the hook function for Passing xTask as NULL has the effect of setting the calling tasks hook function.
- `pxHookFunction`: Pointer to the hook function.

TaskHookFunction_t **xTaskGetApplicationTaskTag** (*TaskHandle_t xTask*)

Returns the pxHookFunction value assigned to the task xTask. Do not call from an interrupt service routine - call xTaskGetApplicationTaskTagFromISR() instead.

TaskHookFunction_t **xTaskGetApplicationTaskTagFromISR** (*TaskHandle_t xTask*)

Returns the pxHookFunction value assigned to the task xTask. Can be called from an interrupt service routine.

void **vTaskSetThreadLocalStoragePointer** (*TaskHandle_t xTaskToSet*, BaseType_t *xIndex*, void **pvValue*)

Set local storage pointer specific to the given task.

Each task contains an array of pointers that is dimensioned by the configNUM_THREAD_LOCAL_STORAGE_POINTERS setting in FreeRTOSConfig.h. The kernel does not use the pointers itself, so the application writer can use the pointers for any purpose they wish.

Parameters

- `xTaskToSet`: Task to set thread local storage pointer for
- `xIndex`: The index of the pointer to set, from 0 to configNUM_THREAD_LOCAL_STORAGE_POINTERS - 1.
- `pvValue`: Pointer value to set.

void ***pvTaskGetThreadLocalStoragePointer** (*TaskHandle_t xTaskToQuery*, BaseType_t *xIndex*)

Get local storage pointer specific to the given task.

Each task contains an array of pointers that is dimensioned by the configNUM_THREAD_LOCAL_STORAGE_POINTERS setting in FreeRTOSConfig.h. The kernel does not use the pointers itself, so the application writer can use the pointers for any purpose they wish.

Return Pointer value

Parameters

- `xTaskToQuery`: Task to get thread local storage pointer for
- `xIndex`: The index of the pointer to get, from 0 to configNUM_THREAD_LOCAL_STORAGE_POINTERS - 1.

void **vTaskSetThreadLocalStoragePointerAndDelCallback**(*TaskHandle_t xTaskToSet*, BaseType_t *xIndex*, void **pvValue*, *TlsDeleteCallbackFunction_t pvDelCallback*)

Set local storage pointer and deletion callback.

Each task contains an array of pointers that is dimensioned by the configNUM_THREAD_LOCAL_STORAGE_POINTERS setting in FreeRTOSConfig.h. The kernel does not use the pointers itself, so the application writer can use the pointers for any purpose they wish.

Local storage pointers set for a task can reference dynamically allocated resources. This function is similar to vTaskSetThreadLocalStoragePointer, but provides a way to release these resources when the task gets deleted. For each pointer, a callback function can be set. This function will be called when task is deleted, with the local storage pointer index and value as arguments.

Parameters

- `xTaskToSet`: Task to set thread local storage pointer for
- `xIndex`: The index of the pointer to set, from 0 to configNUM_THREAD_LOCAL_STORAGE_POINTERS - 1.
- `pvValue`: Pointer value to set.
- `pvDelCallback`: Function to call to dispose of the local storage pointer when the task is deleted.

BaseType_t **xTaskCallApplicationTaskHook**(*TaskHandle_t xTask*, void **pvParameter*)

Calls the hook function associated with xTask. Passing xTask as NULL has the effect of calling the Running tasks (the calling task) hook function.

Parameters

- `xTask`: Handle of the task to call the hook for.
- `pvParameter`: Parameter passed to the hook function for the task to interpret as it wants. The return value is the value returned by the task hook function registered by the user.

TaskHandle_t **xTaskGetIdleTaskHandle**(void)

xTaskGetIdleTaskHandle() is only available if INCLUDE_xTaskGetIdleTaskHandle is set to 1 in FreeRTOSConfig.h.

Simply returns the handle of the idle task. It is not valid to call xTaskGetIdleTaskHandle() before the scheduler has been started.

UBaseType_t **uxTaskGetSystemState**(TaskStatus_t ***const** *pxTaskStatusArray*, **const** UBaseType_t *uxArraySize*, uint32_t ***const** *pulTotalRunTime*)

configUSE_TRACE_FACILITY must be defined as 1 in FreeRTOSConfig.h for uxTaskGetSystemState() to be available.

uxTaskGetSystemState() populates an TaskStatus_t structure for each task in the system. TaskStatus_t structures contain, among other things, members for the task handle, task name, task priority, task state, and total amount of run time consumed by the task. See the TaskStatus_t structure definition in this file for the full member list.

Example usage:

```
// This example demonstrates how a human readable table of run time stats
// information is generated from raw data provided by uxTaskGetSystemState().
// The human readable table is written to pcWriteBuffer
void vTaskGetRunTimeStats( char *pcWriteBuffer )
```

(下页继续)

(续上页)

```
{
TaskStatus_t *pxTaskStatusArray;
volatile UBaseType_t uxArraySize, x;
uint32_t ulTotalRunTime, ulStatsAsPercentage;

 // Make sure the write buffer does not contain a string.
 *pcWriteBuffer = 0x00;

 // Take a snapshot of the number of tasks in case it changes while this
 // function is executing.
 uxArraySize = uxTaskGetNumberOfTasks();

 // Allocate a TaskStatus_t structure for each task.  An array could be
 // allocated statically at compile time.
 pxTaskStatusArray = pvPortMalloc( uxArraySize * sizeof( TaskStatus_t ) );

 if( pxTaskStatusArray != NULL )
 {
     // Generate raw status information about each task.
     uxArraySize = uxTaskGetSystemState( pxTaskStatusArray, uxArraySize, &
↪ulTotalRunTime );

     // For percentage calculations.
     ulTotalRunTime /= 100UL;

     // Avoid divide by zero errors.
     if( ulTotalRunTime > 0 )
     {
         // For each populated position in the pxTaskStatusArray array,
         // format the raw data as human readable ASCII data
         for( x = 0; x < uxArraySize; x++ )
         {
             // What percentage of the total run time has the task used?
             // This will always be rounded down to the nearest integer.
             // ulTotalRunTimeDiv100 has already been divided by 100.
             ulStatsAsPercentage = pxTaskStatusArray[ x ].ulRunTimeCounter /␣
↪ulTotalRunTime;

             if( ulStatsAsPercentage > 0UL )
             {
                 sprintf( pcWriteBuffer, "%s\t\t%lu\t\t%lu%%\r\n",␣
↪pxTaskStatusArray[ x ].pcTaskName, pxTaskStatusArray[ x ].ulRunTimeCounter,␣
↪ulStatsAsPercentage );
             }
             else
             {
                 // If the percentage is zero here then the task has
                 // consumed less than 1% of the total run time.
                 sprintf( pcWriteBuffer, "%s\t\t%lu\t\t<1%%\r\n",␣
↪pxTaskStatusArray[ x ].pcTaskName, pxTaskStatusArray[ x ].ulRunTimeCounter );
             }

             pcWriteBuffer += strlen( ( char * ) pcWriteBuffer );
         }
     }

     // The array is no longer needed, free the memory it consumes.
     vPortFree( pxTaskStatusArray );
 }
}
```

Note This function is intended for debugging use only as its use results in the scheduler remaining suspended

for an extended period.

Return The number of TaskStatus_t structures that were populated by uxTaskGetSystemState(). This should equal the number returned by the uxTaskGetNumberOfTasks() API function, but will be zero if the value passed in the uxArraySize parameter was too small.

Parameters

- `pxTaskStatusArray`: A pointer to an array of TaskStatus_t structures. The array must contain at least one TaskStatus_t structure for each task that is under the control of the RTOS. The number of tasks under the control of the RTOS can be determined using the uxTaskGetNumberOfTasks() API function.
- `uxArraySize`: The size of the array pointed to by the pxTaskStatusArray parameter. The size is specified as the number of indexes in the array, or the number of TaskStatus_t structures contained in the array, not by the number of bytes in the array.
- `pulTotalRunTime`: If configGENERATE_RUN_TIME_STATS is set to 1 in FreeRTOSConfig.h then *pulTotalRunTime is set by uxTaskGetSystemState() to the total run time (as defined by the run time stats clock, see http://www.freertos.org/rtos-run-time-stats.html) since the target booted. pulTotalRunTime can be set to NULL to omit the total run time information.

void **`vTaskList`**(char **pcWriteBuffer*)

List all the current tasks.

configUSE_TRACE_FACILITY and configUSE_STATS_FORMATTING_FUNCTIONS must both be defined as 1 for this function to be available. See the configuration section of the FreeRTOS.org website for more information.

Lists all the current tasks, along with their current state and stack usage high water mark.

Note This function will disable interrupts for its duration. It is not intended for normal application runtime use but as a debug aid.

Tasks are reported as blocked ('B'), ready ('R'), deleted ('D') or suspended ('S').

vTaskList() calls uxTaskGetSystemState(), then formats part of the uxTaskGetSystemState() output into a human readable table that displays task names, states and stack usage.

Note This function is provided for convenience only, and is used by many of the demo applications. Do not consider it to be part of the scheduler.

vTaskList() has a dependency on the sprintf() C library function that might bloat the code size, use a lot of stack, and provide different results on different platforms. An alternative, tiny, third party, and limited functionality implementation of sprintf() is provided in many of the FreeRTOS/Demo sub-directories in a file called printf-stdarg.c (note printf-stdarg.c does not provide a full snprintf() implementation!).

It is recommended that production systems call uxTaskGetSystemState() directly to get access to raw stats data, rather than indirectly through a call to vTaskList().

Parameters

- `pcWriteBuffer`: A buffer into which the above mentioned details will be written, in ASCII form. This buffer is assumed to be large enough to contain the generated report. Approximately 40 bytes per task should be sufficient.

void **`vTaskGetRunTimeStats`**(char **pcWriteBuffer*)

Get the state of running tasks as a string

configGENERATE_RUN_TIME_STATS and configUSE_STATS_FORMATTING_FUNCTIONS must both be defined as 1 for this function to be available. The application must also then provide definitions for portCONFIGURE_TIMER_FOR_RUN_TIME_STATS() and portGET_RUN_TIME_COUNTER_VALUE() to configure a peripheral timer/counter and return the timers current count value respectively. The counter should be at least 10 times the frequency of the tick count.

Setting configGENERATE_RUN_TIME_STATS to 1 will result in a total accumulated execution time being stored for each task. The resolution of the accumulated time value depends on the frequency of the timer configured by the portCONFIGURE_TIMER_FOR_RUN_TIME_STATS() macro. Calling vTaskGetRunTimeStats() writes the total execution time of each task into a buffer, both as an absolute count value and as a percentage of the total system execution time.

Note This function will disable interrupts for its duration. It is not intended for normal application runtime use but as a debug aid.

vTaskGetRunTimeStats() calls uxTaskGetSystemState(), then formats part of the uxTaskGetSystemState() output into a human readable table that displays the amount of time each task has spent in the Running state in both absolute and percentage terms.

Note This function is provided for convenience only, and is used by many of the demo applications. Do not consider it to be part of the scheduler.

vTaskGetRunTimeStats() has a dependency on the sprintf() C library function that might bloat the code size, use a lot of stack, and provide different results on different platforms. An alternative, tiny, third party, and limited functionality implementation of sprintf() is provided in many of the FreeRTOS/Demo sub-directories in a file called printf-stdarg.c (note printf-stdarg.c does not provide a full snprintf() implementation!).

It is recommended that production systems call uxTaskGetSystemState() directly to get access to raw stats data, rather than indirectly through a call to vTaskGetRunTimeStats().

Parameters

- `pcWriteBuffer`: A buffer into which the execution times will be written, in ASCII form. This buffer is assumed to be large enough to contain the generated report. Approximately 40 bytes per task should be sufficient.

uint32_t **`ulTaskGetIdleRunTimeCounter`**(void)

configGENERATE_RUN_TIME_STATS and configUSE_STATS_FORMATTING_FUNCTIONS must both be defined as 1 for this function to be available. The application must also then provide definitions for portCONFIGURE_TIMER_FOR_RUN_TIME_STATS() and portGET_RUN_TIME_COUNTER_VALUE() to configure a peripheral timer/counter and return the timers current count value respectively. The counter should be at least 10 times the frequency of the tick count.

Setting configGENERATE_RUN_TIME_STATS to 1 will result in a total accumulated execution time being stored for each task. The resolution of the accumulated time value depends on the frequency of the timer configured by the portCONFIGURE_TIMER_FOR_RUN_TIME_STATS() macro. While uxTaskGetSystemState() and vTaskGetRunTimeStats() writes the total execution time of each task into a buffer, ulTaskGetIdleRunTimeCounter() returns the total execution time of just the idle task.

Return The total run time of the idle task. This is the amount of time the idle task has actually been executing. The unit of time is dependent on the frequency configured using the portCONFIGURE_TIMER_FOR_RUN_TIME_STATS() and portGET_RUN_TIME_COUNTER_VALUE() macros.

BaseType_t **`xTaskGenericNotify`**(*TaskHandle_t xTaskToNotify*, uint32_t *ulValue*, *eNotifyAction eAction*, uint32_t **pulPreviousNotificationValue*)

configUSE_TASK_NOTIFICATIONS must be undefined or defined as 1 for this function to be available.

When configUSE_TASK_NOTIFICATIONS is set to one each task has its own private "notification value", which is a 32-bit unsigned integer (uint32_t).

Events can be sent to a task using an intermediary object. Examples of such objects are queues, semaphores, mutexes and event groups. Task notifications are a method of sending an event directly to a task without the need for such an intermediary object.

A notification sent to a task can optionally perform an action, such as update, overwrite or increment the task's notification value. In that way task notifications can be used to send data to a task, or be used as light weight and fast binary or counting semaphores.

A notification sent to a task will remain pending until it is cleared by the task calling xTaskNotifyWait() or ulTaskNotifyTake(). If the task was already in the Blocked state to wait for a notification when the notification arrives then the task will automatically be removed from the Blocked state (unblocked) and the notification cleared.

A task can use xTaskNotifyWait() to [optionally] block to wait for a notification to be pending, or ulTaskNotifyTake() to [optionally] block to wait for its notification value to have a non-zero value. The task does not consume any CPU time while it is in the Blocked state.

See http://www.FreeRTOS.org/RTOS-task-notifications.html for details.

eSetBits - The task's notification value is bitwise ORed with ulValue. xTaskNofify() always returns pdPASS in this case.

Parameters

- `xTaskToNotify`: The handle of the task being notified. The handle to a task can be returned from the xTaskCreate() API function used to create the task, and the handle of the currently running task can be obtained by calling xTaskGetCurrentTaskHandle().
- `ulValue`: Data that can be sent with the notification. How the data is used depends on the value of the eAction parameter.
- `eAction`: Specifies how the notification updates the task's notification value, if at all. Valid values for eAction are as follows:

eIncrement - The task's notification value is incremented. ulValue is not used and xTaskNotify() always returns pdPASS in this case.

eSetValueWithOverwrite - The task's notification value is set to the value of ulValue, even if the task being notified had not yet processed the previous notification (the task already had a notification pending). xTaskNotify() always returns pdPASS in this case.

eSetValueWithoutOverwrite - If the task being notified did not already have a notification pending then the task's notification value is set to ulValue and xTaskNotify() will return pdPASS. If the task being notified already had a notification pending then no action is performed and pdFAIL is returned.

eNoAction - The task receives a notification without its notification value being updated. ulValue is not used and xTaskNotify() always returns pdPASS in this case.

Return Dependent on the value of eAction. See the description of the eAction parameter.

Parameters

- `pulPreviousNotificationValue`: Can be used to pass out the subject task's notification value before any bits are modified by the notify function.

BaseType_t **xTaskGenericNotifyFromISR**(*TaskHandle_t xTaskToNotify*, uint32_t *ulValue*, *eNotifyAction eAction*, uint32_t **pulPreviousNotificationValue*, BaseType_t **pxHigherPriorityTaskWoken*)

Send task notification from an ISR.

configUSE_TASK_NOTIFICATIONS must be undefined or defined as 1 for this function to be available.

When configUSE_TASK_NOTIFICATIONS is set to one each task has its own private "notification value", which is a 32-bit unsigned integer (uint32_t).

A version of xTaskNotify() that can be used from an interrupt service routine (ISR).

Events can be sent to a task using an intermediary object. Examples of such objects are queues, semaphores, mutexes and event groups. Task notifications are a method of sending an event directly to a task without the need for such an intermediary object.

A notification sent to a task can optionally perform an action, such as update, overwrite or increment the task's notification value. In that way task notifications can be used to send data to a task, or be used as light weight and fast binary or counting semaphores.

A notification sent to a task will remain pending until it is cleared by the task calling xTaskNotifyWait() or ulTaskNotifyTake(). If the task was already in the Blocked state to wait for a notification when the notification arrives then the task will automatically be removed from the Blocked state (unblocked) and the notification cleared.

A task can use xTaskNotifyWait() to [optionally] block to wait for a notification to be pending, or ulTaskNotifyTake() to [optionally] block to wait for its notification value to have a non-zero value. The task does not consume any CPU time while it is in the Blocked state.

See http://www.FreeRTOS.org/RTOS-task-notifications.html for details.

eSetBits - The task's notification value is bitwise ORed with ulValue. xTaskNofify() always returns pdPASS in this case.

Parameters

- `xTaskToNotify`: The handle of the task being notified. The handle to a task can be returned from the xTaskCreate() API function used to create the task, and the handle of the currently running task can be obtained by calling xTaskGetCurrentTaskHandle().
- `ulValue`: Data that can be sent with the notification. How the data is used depends on the value of the eAction parameter.
- `eAction`: Specifies how the notification updates the task's notification value, if at all. Valid values for eAction are as follows:

eIncrement - The task's notification value is incremented. ulValue is not used and xTaskNotify() always returns pdPASS in this case.

eSetValueWithOverwrite - The task's notification value is set to the value of ulValue, even if the task being notified had not yet processed the previous notification (the task already had a notification pending). xTaskNotify() always returns pdPASS in this case.

eSetValueWithoutOverwrite - If the task being notified did not already have a notification pending then the task's notification value is set to ulValue and xTaskNotify() will return pdPASS. If the task being notified already had a notification pending then no action is performed and pdFAIL is returned.

eNoAction - The task receives a notification without its notification value being updated. ulValue is not used and xTaskNotify() always returns pdPASS in this case.

Return Dependent on the value of eAction. See the description of the eAction parameter.

Parameters

- `pulPreviousNotificationValue`: Can be used to pass out the subject task's notification value before any bits are modified by the notify function.
- `pxHigherPriorityTaskWoken`: xTaskNotifyFromISR() will set *pxHigherPriorityTaskWoken to pdTRUE if sending the notification caused the task to which the notification was sent to leave the Blocked state, and the unblocked task has a priority higher than the currently running task. If xTaskNotifyFromISR() sets this value to pdTRUE then a context switch should be requested before the interrupt is exited. How a context switch is requested from an ISR is dependent on the port - see the documentation page for the port in use.

BaseType_t **`xTaskNotifyWait`**(uint32_t *ulBitsToClearOnEntry*, uint32_t *ulBitsToClearOnExit*, uint32_t **pulNotificationValue*, TickType_t *xTicksToWait*)

Wait for task notification

configUSE_TASK_NOTIFICATIONS must be undefined or defined as 1 for this function to be available.

When configUSE_TASK_NOTIFICATIONS is set to one each task has its own private "notification value", which is a 32-bit unsigned integer (uint32_t).

Events can be sent to a task using an intermediary object. Examples of such objects are queues, semaphores, mutexes and event groups. Task notifications are a method of sending an event directly to a task without the need for such an intermediary object.

A notification sent to a task can optionally perform an action, such as update, overwrite or increment the task's notification value. In that way task notifications can be used to send data to a task, or be used as light weight and fast binary or counting semaphores.

A notification sent to a task will remain pending until it is cleared by the task calling xTaskNotifyWait() or ulTaskNotifyTake(). If the task was already in the Blocked state to wait for a notification when the notification arrives then the task will automatically be removed from the Blocked state (unblocked) and the notification cleared.

A task can use xTaskNotifyWait() to [optionally] block to wait for a notification to be pending, or ulTaskNotifyTake() to [optionally] block to wait for its notification value to have a non-zero value. The task does not consume any CPU time while it is in the Blocked state.

See http://www.FreeRTOS.org/RTOS-task-notifications.html for details.

Return If a notification was received (including notifications that were already pending when xTaskNotifyWait was called) then pdPASS is returned. Otherwise pdFAIL is returned.

Parameters

- `ulBitsToClearOnEntry`: Bits that are set in ulBitsToClearOnEntry value will be cleared in the calling task's notification value before the task checks to see if any notifications are pending, and optionally blocks if no notifications are pending. Setting ulBitsToClearOnEntry to ULONG_MAX (if limits.h is included) or 0xffffffffUL (if limits.h is not included) will have the effect of resetting the task's notification value to 0. Setting ulBitsToClearOnEntry to 0 will leave the task's notification value unchanged.
- `ulBitsToClearOnExit`: If a notification is pending or received before the calling task exits the xTaskNotifyWait() function then the task's notification value (see the xTaskNotify() API function) is passed out using the pulNotificationValue parameter. Then any bits that are set in ulBitsToClearOnExit will be cleared in the task's notification value (note *pulNotificationValue is set before any bits are cleared). Setting ulBitsToClearOnExit to ULONG_MAX (if limits.h is included) or 0xffffffffUL (if limits.h is not included) will have the effect of resetting the task's notification value to 0 before the function exits. Setting ulBitsToClearOnExit to 0 will leave the task's notification value unchanged when the function exits (in which case the value passed out in pulNotificationValue will match the task's notification value).
- `pulNotificationValue`: Used to pass the task's notification value out of the function. Note the value passed out will not be effected by the clearing of any bits caused by ulBitsToClearOnExit being non-zero.
- `xTicksToWait`: The maximum amount of time that the task should wait in the Blocked state for a notification to be received, should a notification not already be pending when xTaskNotifyWait() was called. The task will not consume any processing time while it is in the Blocked state. This is specified in kernel ticks, the macro pdMS_TO_TICKS(value_in_ms) can be used to convert a time specified in milliseconds to a time specified in ticks.

void **vTaskNotifyGiveFromISR**(*TaskHandle_t* *xTaskToNotify*, BaseType_t **pxHigherPriorityTaskWoken*)

Simplified macro for sending task notification from ISR.

configUSE_TASK_NOTIFICATIONS must be undefined or defined as 1 for this macro to be available.

When configUSE_TASK_NOTIFICATIONS is set to one each task has its own private "notification value", which is a 32-bit unsigned integer (uint32_t).

A version of xTaskNotifyGive() that can be called from an interrupt service routine (ISR).

Events can be sent to a task using an intermediary object. Examples of such objects are queues, semaphores, mutexes and event groups. Task notifications are a method of sending an event directly to a task without the need for such an intermediary object.

A notification sent to a task can optionally perform an action, such as update, overwrite or increment the task's notification value. In that way task notifications can be used to send data to a task, or be used as light weight and fast binary or counting semaphores.

vTaskNotifyGiveFromISR() is intended for use when task notifications are used as light weight and faster binary or counting semaphore equivalents. Actual FreeRTOS semaphores are given from an ISR using the xSemaphoreGiveFromISR() API function, the equivalent action that instead uses a task notification is vTaskNotifyGiveFromISR().

When task notifications are being used as a binary or counting semaphore equivalent then the task being notified should wait for the notification using the ulTaskNotificationTake() API function rather than the xTaskNotifyWait() API function.

See http://www.FreeRTOS.org/RTOS-task-notifications.html for more details.

Parameters

- `xTaskToNotify`: The handle of the task being notified. The handle to a task can be returned from the xTaskCreate() API function used to create the task, and the handle of the currently running task can be obtained by calling xTaskGetCurrentTaskHandle().
- `pxHigherPriorityTaskWoken`: vTaskNotifyGiveFromISR() will set *pxHigherPriorityTaskWoken to pdTRUE if sending the notification caused the task to which the notification was sent to leave the Blocked state, and the unblocked task has a priority higher than the currently running task. If vTaskNotifyGiveFromISR() sets this value to pdTRUE then a context switch should be

requested before the interrupt is exited. How a context switch is requested from an ISR is dependent on the port - see the documentation page for the port in use.

uint32_t **ulTaskNotifyTake**(BaseType_t *xClearCountOnExit*, TickType_t *xTicksToWait*)

Simplified macro for receiving task notification.

configUSE_TASK_NOTIFICATIONS must be undefined or defined as 1 for this function to be available.

When configUSE_TASK_NOTIFICATIONS is set to one each task has its own private "notification value", which is a 32-bit unsigned integer (uint32_t).

Events can be sent to a task using an intermediary object. Examples of such objects are queues, semaphores, mutexes and event groups. Task notifications are a method of sending an event directly to a task without the need for such an intermediary object.

A notification sent to a task can optionally perform an action, such as update, overwrite or increment the task's notification value. In that way task notifications can be used to send data to a task, or be used as light weight and fast binary or counting semaphores.

ulTaskNotifyTake() is intended for use when a task notification is used as a faster and lighter weight binary or counting semaphore alternative. Actual FreeRTOS semaphores are taken using the xSemaphoreTake() API function, the equivalent action that instead uses a task notification is ulTaskNotifyTake().

When a task is using its notification value as a binary or counting semaphore other tasks should send notifications to it using the xTaskNotifyGive() macro, or xTaskNotify() function with the eAction parameter set to eIncrement.

ulTaskNotifyTake() can either clear the task's notification value to zero on exit, in which case the notification value acts like a binary semaphore, or decrement the task's notification value on exit, in which case the notification value acts like a counting semaphore.

A task can use ulTaskNotifyTake() to [optionally] block to wait for a the task's notification value to be non-zero. The task does not consume any CPU time while it is in the Blocked state.

Where as xTaskNotifyWait() will return when a notification is pending, ulTaskNotifyTake() will return when the task's notification value is not zero.

See http://www.FreeRTOS.org/RTOS-task-notifications.html for details.

Return The task's notification count before it is either cleared to zero or decremented (see the xClearCountOnExit parameter).

Parameters

- `xClearCountOnExit`: if xClearCountOnExit is pdFALSE then the task's notification value is decremented when the function exits. In this way the notification value acts like a counting semaphore. If xClearCountOnExit is not pdFALSE then the task's notification value is cleared to zero when the function exits. In this way the notification value acts like a binary semaphore.
- `xTicksToWait`: The maximum amount of time that the task should wait in the Blocked state for the task's notification value to be greater than zero, should the count not already be greater than zero when ulTaskNotifyTake() was called. The task will not consume any processing time while it is in the Blocked state. This is specified in kernel ticks, the macro pdMS_TO_TICKS(value_in_ms) can be used to convert a time specified in milliseconds to a time specified in ticks.

BaseType_t **xTaskNotifyStateClear**(*TaskHandle_t xTask*)

If the notification state of the task referenced by the handle xTask is eNotified, then set the task's notification state to eNotWaitingNotification. The task's notification value is not altered. Set xTask to NULL to clear the notification state of the calling task.

Return pdTRUE if the task's notification state was set to eNotWaitingNotification, otherwise pdFALSE.

Macros

tskKERNEL_VERSION_NUMBER
tskKERNEL_VERSION_MAJOR

tskKERNEL_VERSION_MINOR

tskKERNEL_VERSION_BUILD

tskMPU_REGION_READ_ONLY

tskMPU_REGION_READ_WRITE

tskMPU_REGION_EXECUTE_NEVER

tskMPU_REGION_NORMAL_MEMORY

tskMPU_REGION_DEVICE_MEMORY

tskNO_AFFINITY

tskIDLE_PRIORITY
Defines the priority used by the idle task. This must not be modified.

taskYIELD()
Macro for forcing a context switch.

taskENTER_CRITICAL(x)
Macro to mark the start of a critical code region. Preemptive context switches cannot occur when in a critical region.

Note This may alter the stack (depending on the portable implementation) so must be used with care!

taskENTER_CRITICAL_FROM_ISR()

taskENTER_CRITICAL_ISR(mux)

taskEXIT_CRITICAL(x)
Macro to mark the end of a critical code region. Preemptive context switches cannot occur when in a critical region.

Note This may alter the stack (depending on the portable implementation) so must be used with care!

taskEXIT_CRITICAL_FROM_ISR(x)

taskEXIT_CRITICAL_ISR(mux)

taskDISABLE_INTERRUPTS()
Macro to disable all maskable interrupts.

taskENABLE_INTERRUPTS()
Macro to enable microcontroller interrupts.

taskSCHEDULER_SUSPENDED

taskSCHEDULER_NOT_STARTED

taskSCHEDULER_RUNNING

xTaskNotify(xTaskToNotify, ulValue, eAction)

xTaskNotifyAndQuery(xTaskToNotify, ulValue, eAction, pulPreviousNotifyValue)

xTaskNotifyFromISR(xTaskToNotify, ulValue, eAction, pxHigherPriorityTaskWoken)

xTaskNotifyAndQueryFromISR(xTaskToNotify, ulValue, eAction, pulPreviousNotificationValue, pxHigherPriorityTaskWoken)

xTaskNotifyGive(xTaskToNotify)
Simplified macro for sending task notification.

configUSE_TASK_NOTIFICATIONS must be undefined or defined as 1 for this macro to be available.

When configUSE_TASK_NOTIFICATIONS is set to one each task has its own private "notification value", which is a 32-bit unsigned integer (uint32_t).

Events can be sent to a task using an intermediary object. Examples of such objects are queues, semaphores, mutexes and event groups. Task notifications are a method of sending an event directly to a task without the need for such an intermediary object.

A notification sent to a task can optionally perform an action, such as update, overwrite or increment the task's notification value. In that way task notifications can be used to send data to a task, or be used as light weight and fast binary or counting semaphores.

xTaskNotifyGive() is a helper macro intended for use when task notifications are used as light weight and faster binary or counting semaphore equivalents. Actual FreeRTOS semaphores are given using the xSemaphoreGive() API function, the equivalent action that instead uses a task notification is xTaskNotifyGive().

When task notifications are being used as a binary or counting semaphore equivalent then the task being notified should wait for the notification using the ulTaskNotificationTake() API function rather than the xTaskNotifyWait() API function.

See http://www.FreeRTOS.org/RTOS-task-notifications.html for more details.

Return xTaskNotifyGive() is a macro that calls xTaskNotify() with the eAction parameter set to eIncrement - so pdPASS is always returned.

Parameters

- `xTaskToNotify`: The handle of the task being notified. The handle to a task can be returned from the xTaskCreate() API function used to create the task, and the handle of the currently running task can be obtained by calling xTaskGetCurrentTaskHandle().

Type Definitions

typedef void ***TaskHandle_t**

typedef BaseType_t (***TaskHookFunction_t**) (void *)

Defines the prototype to which the application task hook function must conform.

typedef void (***TlsDeleteCallbackFunction_t**) (int, void *)

Prototype of local storage pointer deletion callback.

Enumerations

enum eTaskState

Task states returned by eTaskGetState.

Values:

eRunning = 0

eReady

eBlocked

eSuspended

eDeleted

eInvalid

enum eNotifyAction

Values:

eNoAction = 0

eSetBits

eIncrement

eSetValueWithOverwrite

eSetValueWithoutOverwrite

enum eSleepModeStatus

Possible return values for eTaskConfirmSleepModeStatus().

Values:

eAbortSleep = 0

eStandardSleep

eNoTasksWaitingTimeout

Queue API

Header File

- freertos/include/freertos/queue.h

Functions

BaseType_t **xQueueGenericSendFromISR**(*QueueHandle_t xQueue*, **const** void ***const** *pvItemToQueue*, BaseType_t ***const** *pxHigherPriorityTaskWoken*, **const** BaseType_t *xCopyPosition*)

It is preferred that the macros xQueueSendFromISR(), xQueueSendToFrontFromISR() and xQueueSendToBackFromISR() be used in place of calling this function directly. xQueueGiveFromISR() is an equivalent for use by semaphores that don't actually copy any data.

Post an item on a queue. It is safe to use this function from within an interrupt service routine.

Items are queued by copy not reference so it is preferable to only queue small items, especially when called from an ISR. In most cases it would be preferable to store a pointer to the item being queued.

Example usage for buffered IO (where the ISR can obtain more than one value per call):

```
void vBufferISR( void )
{
char cIn;
BaseType_t xHigherPriorityTaskWokenByPost;

   // We have not woken a task at the start of the ISR.
   xHigherPriorityTaskWokenByPost = pdFALSE;

   // Loop until the buffer is empty.
   do
   {
       // Obtain a byte from the buffer.
       cIn = portINPUT_BYTE( RX_REGISTER_ADDRESS );

       // Post each byte.
       xQueueGenericSendFromISR( xRxQueue, &cIn, &
↪xHigherPriorityTaskWokenByPost, queueSEND_TO_BACK );

   } while( portINPUT_BYTE( BUFFER_COUNT ) );

   // Now the buffer is empty we can switch context if necessary.  Note that␣
↪the
   // name of the yield function required is port specific.
   if( xHigherPriorityTaskWokenByPost )
   {
       taskYIELD_YIELD_FROM_ISR();
   }
}
```

Return pdTRUE if the data was successfully sent to the queue, otherwise errQUEUE_FULL.

Parameters

- `xQueue`: The handle to the queue on which the item is to be posted.
- `pvItemToQueue`: A pointer to the item that is to be placed on the queue. The size of the items the queue will hold was defined when the queue was created, so this many bytes will be copied from pvItemToQueue into the queue storage area.
- `[out] pxHigherPriorityTaskWoken`: xQueueGenericSendFromISR() will set *pxHigherPriorityTaskWoken to pdTRUE if sending to the queue caused a task to unblock, and the un-

blocked task has a priority higher than the currently running task. If xQueueGenericSendFromISR() sets this value to pdTRUE then a context switch should be requested before the interrupt is exited.

- `xCopyPosition`: Can take the value queueSEND_TO_BACK to place the item at the back of the queue, or queueSEND_TO_FRONT to place the item at the front of the queue (for high priority messages).

BaseType_t **xQueueGiveFromISR**(*QueueHandle_t xQueue*, BaseType_t ***const** *pxHigherPriorityTaskWoken*)

BaseType_t **xQueueGenericSend**(*QueueHandle_t xQueue*, **const** void ***const** *pvItemToQueue*, TickType_t *xTicksToWait*, **const** BaseType_t *xCopyPosition*)

It is preferred that the macros xQueueSend(), xQueueSendToFront() and xQueueSendToBack() are used in place of calling this function directly.

Post an item on a queue. The item is queued by copy, not by reference. This function must not be called from an interrupt service routine. See xQueueSendFromISR () for an alternative which may be used in an ISR.

Example usage:

```
struct AMessage
{
char ucMessageID;
char ucData[ 20 ];
} xMessage;

uint32_t ulVar = 10UL;

void vATask( void *pvParameters )
{
QueueHandle_t xQueue1, xQueue2;
struct AMessage *pxMessage;

// Create a queue capable of containing 10 uint32_t values.
xQueue1 = xQueueCreate( 10, sizeof( uint32_t ) );

// Create a queue capable of containing 10 pointers to AMessage structures.
// These should be passed by pointer as they contain a lot of data.
xQueue2 = xQueueCreate( 10, sizeof( struct AMessage * ) );

// ...

if( xQueue1 != 0 )
{
    // Send an uint32_t.  Wait for 10 ticks for space to become
    // available if necessary.
    if( xQueueGenericSend( xQueue1, ( void * ) &ulVar, ( TickType_t ) 10,␣
↪queueSEND_TO_BACK ) != pdPASS )
    {
        // Failed to post the message, even after 10 ticks.
    }
}

if( xQueue2 != 0 )
{
    // Send a pointer to a struct AMessage object.  Don't block if the
    // queue is already full.
    pxMessage = & xMessage;
    xQueueGenericSend( xQueue2, ( void * ) &pxMessage, ( TickType_t ) 0,␣
↪queueSEND_TO_BACK );
}

// ... Rest of task code.
}
```

Return pdTRUE if the item was successfully posted, otherwise errQUEUE_FULL.

Parameters

- `xQueue`: The handle to the queue on which the item is to be posted.
- `pvItemToQueue`: A pointer to the item that is to be placed on the queue. The size of the items the queue will hold was defined when the queue was created, so this many bytes will be copied from pvItemToQueue into the queue storage area.
- `xTicksToWait`: The maximum amount of time the task should block waiting for space to become available on the queue, should it already be full. The call will return immediately if this is set to 0 and the queue is full. The time is defined in tick periods so the constant portTICK_PERIOD_MS should be used to convert to real time if this is required.
- `xCopyPosition`: Can take the value queueSEND_TO_BACK to place the item at the back of the queue, or queueSEND_TO_FRONT to place the item at the front of the queue (for high priority messages).

BaseType_t **xQueuePeek**(*QueueHandle_t xQueue*, void ***const** *pvBuffer*, TickType_t *xTicksToWait*)

Receive an item from a queue without removing the item from the queue. The item is received by copy so a buffer of adequate size must be provided. The number of bytes copied into the buffer was defined when the queue was created.

Successfully received items remain on the queue so will be returned again by the next call, or a call to xQueueReceive().

This macro must not be used in an interrupt service routine. See xQueuePeekFromISR() for an alternative that can be called from an interrupt service routine.

Example usage:

```
struct AMessage
{
char ucMessageID;
char ucData[ 20 ];
} xMessage;

QueueHandle_t xQueue;

// Task to create a queue and post a value.
void vATask( void *pvParameters )
{
struct AMessage *pxMessage;

// Create a queue capable of containing 10 pointers to AMessage structures.
// These should be passed by pointer as they contain a lot of data.
xQueue = xQueueCreate( 10, sizeof( struct AMessage * ) );
if( xQueue == 0 )
{
    // Failed to create the queue.
}

// ...

// Send a pointer to a struct AMessage object.  Don't block if the
// queue is already full.
pxMessage = & xMessage;
xQueueSend( xQueue, ( void * ) &pxMessage, ( TickType_t ) 0 );

// ... Rest of task code.
}

// Task to peek the data from the queue.
void vADifferentTask( void *pvParameters )
{
struct AMessage *pxRxedMessage;

if( xQueue != 0 )
```

(下页继续)

(续上页)

```
{
    // Peek a message on the created queue.  Block for 10 ticks if a
    // message is not immediately available.
    if( xQueuePeek( xQueue, &( pxRxedMessage ), ( TickType_t ) 10 ) )
    {
        // pcRxedMessage now points to the struct AMessage variable posted
        // by vATask, but the item still remains on the queue.
    }
}

// ... Rest of task code.
}
```

Return pdTRUE if an item was successfully received from the queue, otherwise pdFALSE.
Parameters

- `xQueue`: The handle to the queue from which the item is to be received.
- `pvBuffer`: Pointer to the buffer into which the received item will be copied.
- `xTicksToWait`: The maximum amount of time the task should block waiting for an item to receive should the queue be empty at the time of the call. The time is defined in tick periods so the constant portTICK_PERIOD_MS should be used to convert to real time if this is required. xQueuePeek() will return immediately if xTicksToWait is 0 and the queue is empty.

BaseType_t **xQueuePeekFromISR**(*QueueHandle_t xQueue*, void *const *pvBuffer*)

A version of xQueuePeek() that can be called from an interrupt service routine (ISR).

Receive an item from a queue without removing the item from the queue. The item is received by copy so a buffer of adequate size must be provided. The number of bytes copied into the buffer was defined when the queue was created.

Successfully received items remain on the queue so will be returned again by the next call, or a call to xQueueReceive().

Return pdTRUE if an item was successfully received from the queue, otherwise pdFALSE.
Parameters

- `xQueue`: The handle to the queue from which the item is to be received.
- `pvBuffer`: Pointer to the buffer into which the received item will be copied.

BaseType_t **xQueueReceive**(*QueueHandle_t xQueue*, void *const *pvBuffer*, TickType_t *xTicksToWait*)

Receive an item from a queue. The item is received by copy so a buffer of adequate size must be provided. The number of bytes copied into the buffer was defined when the queue was created.

Successfully received items are removed from the queue.

This function must not be used in an interrupt service routine. See xQueueReceiveFromISR for an alternative that can.

Example usage:

```
struct AMessage
{
   char ucMessageID;
   char ucData[ 20 ];
} xMessage;

QueueHandle_t xQueue;

// Task to create a queue and post a value.
void vATask( void *pvParameters )
{
struct AMessage *pxMessage;

   // Create a queue capable of containing 10 pointers to AMessage structures.
```

(下页继续)

(续上页)

```
    // These should be passed by pointer as they contain a lot of data.
    xQueue = xQueueCreate( 10, sizeof( struct AMessage * ) );
    if( xQueue == 0 )
    {
        // Failed to create the queue.
    }

    // ...

    // Send a pointer to a struct AMessage object.  Don't block if the
    // queue is already full.
    pxMessage = & xMessage;
    xQueueSend( xQueue, ( void * ) &pxMessage, ( TickType_t ) 0 );

    // ... Rest of task code.
}

// Task to receive from the queue.
void vADifferentTask( void *pvParameters )
{
struct AMessage *pxRxedMessage;

    if( xQueue != 0 )
    {
        // Receive a message on the created queue.  Block for 10 ticks if a
        // message is not immediately available.
        if( xQueueReceive( xQueue, &( pxRxedMessage ), ( TickType_t ) 10 ) )
        {
            // pcRxedMessage now points to the struct AMessage variable posted
            // by vATask.
        }
    }

    // ... Rest of task code.
}
```

Return pdTRUE if an item was successfully received from the queue, otherwise pdFALSE.

Parameters

- `xQueue`: The handle to the queue from which the item is to be received.
- `pvBuffer`: Pointer to the buffer into which the received item will be copied.
- `xTicksToWait`: The maximum amount of time the task should block waiting for an item to receive should the queue be empty at the time of the call. xQueueReceive() will return immediately if xTicksToWait is zero and the queue is empty. The time is defined in tick periods so the constant portTICK_PERIOD_MS should be used to convert to real time if this is required.

UBaseType_t **uxQueueMessagesWaiting**(**const** *QueueHandle_t xQueue*)

Return the number of messages stored in a queue.

Return The number of messages available in the queue.

Parameters

- `xQueue`: A handle to the queue being queried.

UBaseType_t **uxQueueSpacesAvailable**(**const** *QueueHandle_t xQueue*)

Return the number of free spaces available in a queue. This is equal to the number of items that can be sent to the queue before the queue becomes full if no items are removed.

Return The number of spaces available in the queue.

Parameters

- `xQueue`: A handle to the queue being queried.

void **vQueueDelete**(*QueueHandle_t xQueue*)

Delete a queue - freeing all the memory allocated for storing of items placed on the queue.

Parameters

- `xQueue`: A handle to the queue to be deleted.

BaseType_t **xQueueReceiveFromISR**(*QueueHandle_t xQueue*, void ***const** *pvBuffer*, BaseType_t ***const** *pxHigherPriorityTaskWoken*)

Receive an item from a queue. It is safe to use this function from within an interrupt service routine.

Example usage:

```
QueueHandle_t xQueue;

// Function to create a queue and post some values.
void vAFunction( void *pvParameters )
{
char cValueToPost;
const TickType_t xTicksToWait = ( TickType_t )0xff;

   // Create a queue capable of containing 10 characters.
   xQueue = xQueueCreate( 10, sizeof( char ) );
   if( xQueue == 0 )
   {
       // Failed to create the queue.
   }

   // ...

   // Post some characters that will be used within an ISR.  If the queue
   // is full then this task will block for xTicksToWait ticks.
   cValueToPost = 'a';
   xQueueSend( xQueue, ( void * ) &cValueToPost, xTicksToWait );
   cValueToPost = 'b';
   xQueueSend( xQueue, ( void * ) &cValueToPost, xTicksToWait );

   // ... keep posting characters ... this task may block when the queue
   // becomes full.

   cValueToPost = 'c';
   xQueueSend( xQueue, ( void * ) &cValueToPost, xTicksToWait );
}

// ISR that outputs all the characters received on the queue.
void vISR_Routine( void )
{
BaseType_t xTaskWokenByReceive = pdFALSE;
char cRxedChar;

   while( xQueueReceiveFromISR( xQueue, ( void * ) &cRxedChar, &
↪xTaskWokenByReceive) )
   {
       // A character was received.  Output the character now.
       vOutputCharacter( cRxedChar );

       // If removing the character from the queue woke the task that was
       // posting onto the queue cTaskWokenByReceive will have been set to
       // pdTRUE.  No matter how many times this loop iterates only one
       // task will be woken.
   }

   if( cTaskWokenByPost != ( char ) pdFALSE;
   {
       taskYIELD ();
   }
}
```

Return pdTRUE if an item was successfully received from the queue, otherwise pdFALSE.

Parameters

- `xQueue`: The handle to the queue from which the item is to be received.
- `pvBuffer`: Pointer to the buffer into which the received item will be copied.
- `[out] pxHigherPriorityTaskWoken`: A task may be blocked waiting for space to become available on the queue. If xQueueReceiveFromISR causes such a task to unblock *pxTaskWoken will get set to pdTRUE, otherwise *pxTaskWoken will remain unchanged.

BaseType_t **xQueueIsQueueEmptyFromISR**(**const** *QueueHandle_t xQueue*)

BaseType_t **xQueueIsQueueFullFromISR**(**const** *QueueHandle_t xQueue*)

UBaseType_t **uxQueueMessagesWaitingFromISR**(**const** *QueueHandle_t xQueue*)

void **vQueueAddToRegistry**(*QueueHandle_t xQueue*, **const** char **pcQueueName*)

The registry is provided as a means for kernel aware debuggers to locate queues, semaphores and mutexes. Call vQueueAddToRegistry() add a queue, semaphore or mutex handle to the registry if you want the handle to be available to a kernel aware debugger. If you are not using a kernel aware debugger then this function can be ignored.

configQUEUE_REGISTRY_SIZE defines the maximum number of handles the registry can hold. configQUEUE_REGISTRY_SIZE must be greater than 0 within FreeRTOSConfig.h for the registry to be available. Its value does not effect the number of queues, semaphores and mutexes that can be created - just the number that the registry can hold.

Parameters

- `xQueue`: The handle of the queue being added to the registry. This is the handle returned by a call to xQueueCreate(). Semaphore and mutex handles can also be passed in here.
- `pcQueueName`: The name to be associated with the handle. This is the name that the kernel aware debugger will display. The queue registry only stores a pointer to the string - so the string must be persistent (global or preferably in ROM/Flash), not on the stack.

void **vQueueUnregisterQueue**(*QueueHandle_t xQueue*)

lint !e971 Unqualified char types are allowed for strings and single characters only. The registry is provided as a means for kernel aware debuggers to locate queues, semaphores and mutexes. Call vQueueAddToRegistry() add a queue, semaphore or mutex handle to the registry if you want the handle to be available to a kernel aware debugger, and vQueueUnregisterQueue() to remove the queue, semaphore or mutex from the register. If you are not using a kernel aware debugger then this function can be ignored.

Parameters

- `xQueue`: The handle of the queue being removed from the registry.

const char ***pcQueueGetName**(*QueueHandle_t xQueue*)

The queue registry is provided as a means for kernel aware debuggers to locate queues, semaphores and mutexes. Call pcQueueGetName() to look up and return the name of a queue in the queue registry from the queue's handle.

Return If the queue is in the registry then a pointer to the name of the queue is returned. If the queue is not in the registry then NULL is returned.

Parameters

- `xQueue`: The handle of the queue the name of which will be returned.

QueueHandle_t **xQueueGenericCreate**(**const** UBaseType_t *uxQueueLength*, **const** UBaseType_t *uxItemSize*, **const** uint8_t *ucQueueType*)

lint !e971 Unqualified char types are allowed for strings and single characters only. Generic version of the function used to creaet a queue using dynamic memory allocation. This is called by other functions and macros that create other RTOS objects that use the queue structure as their base.

QueueHandle_t **xQueueGenericCreateStatic**(**const** UBaseType_t *uxQueueLength*, **const** UBaseType_t *uxItemSize*, uint8_t **pucQueueStorage*, StaticQueue_t **pxStaticQueue*, **const** uint8_t *ucQueueType*)

Generic version of the function used to creaet a queue using dynamic memory allocation. This is called by other functions and macros that create other RTOS objects that use the queue structure as their base.

QueueSetHandle_t **xQueueCreateSet**(**const** UBaseType_t *uxEventQueueLength*)

Queue sets provide a mechanism to allow a task to block (pend) on a read operation from multiple queues or semaphores simultaneously.

See FreeRTOS/Source/Demo/Common/Minimal/QueueSet.c for an example using this function.

A queue set must be explicitly created using a call to xQueueCreateSet() before it can be used. Once created, standard FreeRTOS queues and semaphores can be added to the set using calls to xQueueAddToSet(). xQueueSelectFromSet() is then used to determine which, if any, of the queues or semaphores contained in the set is in a state where a queue read or semaphore take operation would be successful.

Note 1: See the documentation on http://www.FreeRTOS.org/RTOS-queue-sets.html for reasons why queue sets are very rarely needed in practice as there are simpler methods of blocking on multiple objects.

Note 2: Blocking on a queue set that contains a mutex will not cause the mutex holder to inherit the priority of the blocked task.

Note 3: An additional 4 bytes of RAM is required for each space in a every queue added to a queue set. Therefore counting semaphores that have a high maximum count value should not be added to a queue set.

Note 4: A receive (in the case of a queue) or take (in the case of a semaphore) operation must not be performed on a member of a queue set unless a call to xQueueSelectFromSet() has first returned a handle to that set member.

Return If the queue set is created successfully then a handle to the created queue set is returned. Otherwise NULL is returned.

Parameters

- `uxEventQueueLength`: Queue sets store events that occur on the queues and semaphores contained in the set. uxEventQueueLength specifies the maximum number of events that can be queued at once. To be absolutely certain that events are not lost uxEventQueueLength should be set to the total sum of the length of the queues added to the set, where binary semaphores and mutexes have a length of 1, and counting semaphores have a length set by their maximum count value. Examples:
  - If a queue set is to hold a queue of length 5, another queue of length 12, and a binary semaphore, then uxEventQueueLength should be set to (5 + 12 + 1), or 18.
  - If a queue set is to hold three binary semaphores then uxEventQueueLength should be set to (1 + 1 + 1), or 3.
  - If a queue set is to hold a counting semaphore that has a maximum count of 5, and a counting semaphore that has a maximum count of 3, then uxEventQueueLength should be set to (5 + 3), or 8.

BaseType_t **xQueueAddToSet**(*QueueSetMemberHandle_t* *xQueueOrSemaphore*, *QueueSetHandle_t* *xQueueSet*)

Adds a queue or semaphore to a queue set that was previously created by a call to xQueueCreateSet().

See FreeRTOS/Source/Demo/Common/Minimal/QueueSet.c for an example using this function.

Note 1: A receive (in the case of a queue) or take (in the case of a semaphore) operation must not be performed on a member of a queue set unless a call to xQueueSelectFromSet() has first returned a handle to that set member.

Return If the queue or semaphore was successfully added to the queue set then pdPASS is returned. If the queue could not be successfully added to the queue set because it is already a member of a different queue set then pdFAIL is returned.

Parameters

- `xQueueOrSemaphore`: The handle of the queue or semaphore being added to the queue set (cast to an QueueSetMemberHandle_t type).
- `xQueueSet`: The handle of the queue set to which the queue or semaphore is being added.

BaseType_t **xQueueRemoveFromSet**(*QueueSetMemberHandle_t* *xQueueOrSemaphore*, *QueueSetHandle_t* *xQueueSet*)

Removes a queue or semaphore from a queue set. A queue or semaphore can only be removed from a set if the queue or semaphore is empty.

See FreeRTOS/Source/Demo/Common/Minimal/QueueSet.c for an example using this function.

Return If the queue or semaphore was successfully removed from the queue set then pdPASS is returned. If the queue was not in the queue set, or the queue (or semaphore) was not empty, then pdFAIL is returned.

Parameters

- `xQueueOrSemaphore`: The handle of the queue or semaphore being removed from the queue set (cast to an QueueSetMemberHandle_t type).
- `xQueueSet`: The handle of the queue set in which the queue or semaphore is included.

QueueSetMemberHandle_t **xQueueSelectFromSet**(*QueueSetHandle_t xQueueSet*, **const** TickType_t *xTicksToWait*)

xQueueSelectFromSet() selects from the members of a queue set a queue or semaphore that either contains data (in the case of a queue) or is available to take (in the case of a semaphore). xQueueSelectFromSet() effectively allows a task to block (pend) on a read operation on all the queues and semaphores in a queue set simultaneously.

See FreeRTOS/Source/Demo/Common/Minimal/QueueSet.c for an example using this function.

Note 1: See the documentation on http://www.FreeRTOS.org/RTOS-queue-sets.html for reasons why queue sets are very rarely needed in practice as there are simpler methods of blocking on multiple objects.

Note 2: Blocking on a queue set that contains a mutex will not cause the mutex holder to inherit the priority of the blocked task.

Note 3: A receive (in the case of a queue) or take (in the case of a semaphore) operation must not be performed on a member of a queue set unless a call to xQueueSelectFromSet() has first returned a handle to that set member.

Return xQueueSelectFromSet() will return the handle of a queue (cast to a QueueSetMemberHandle_t type) contained in the queue set that contains data, or the handle of a semaphore (cast to a QueueSetMemberHandle_t type) contained in the queue set that is available, or NULL if no such queue or semaphore exists before before the specified block time expires.

Parameters

- `xQueueSet`: The queue set on which the task will (potentially) block.
- `xTicksToWait`: The maximum time, in ticks, that the calling task will remain in the Blocked state (with other tasks executing) to wait for a member of the queue set to be ready for a successful queue read or semaphore take operation.

QueueSetMemberHandle_t **xQueueSelectFromSetFromISR**(*QueueSetHandle_t xQueueSet*)

A version of xQueueSelectFromSet() that can be used from an ISR.

Macros

xQueueCreate(uxQueueLength, uxItemSize)

Creates a new queue instance. This allocates the storage required by the new queue and returns a handle for the queue.

Example usage:

```
struct AMessage
{
char ucMessageID;
char ucData[ 20 ];
};

void vATask( void *pvParameters )
{
QueueHandle_t xQueue1, xQueue2;

// Create a queue capable of containing 10 uint32_t values.
xQueue1 = xQueueCreate( 10, sizeof( uint32_t ) );
if( xQueue1 == 0 )
{
    // Queue was not created and must not be used.
}
```

(下页继续)

(续上页)

```
// Create a queue capable of containing 10 pointers to AMessage structures.
// These should be passed by pointer as they contain a lot of data.
xQueue2 = xQueueCreate( 10, sizeof( struct AMessage * ) );
if( xQueue2 == 0 )
{
    // Queue was not created and must not be used.
}

// ... Rest of task code.
}
```

Return If the queue is successfully create then a handle to the newly created queue is returned. If the queue cannot be created then 0 is returned.

Parameters

- `uxQueueLength`: The maximum number of items that the queue can contain.
- `uxItemSize`: The number of bytes each item in the queue will require. Items are queued by copy, not by reference, so this is the number of bytes that will be copied for each posted item. Each item on the queue must be the same size.

xQueueCreateStatic(uxQueueLength, uxItemSize, pucQueueStorage, pxQueueBuffer)

Creates a new queue instance, and returns a handle by which the new queue can be referenced.

Internally, within the FreeRTOS implementation, queues use two blocks of memory. The first block is used to hold the queue's data structures. The second block is used to hold items placed into the queue. If a queue is created using xQueueCreate() then both blocks of memory are automatically dynamically allocated inside the xQueueCreate() function. (see http://www.freertos.org/a00111.html). If a queue is created using xQueueCreateStatic() then the application writer must provide the memory that will get used by the queue. xQueueCreateStatic() therefore allows a queue to be created without using any dynamic memory allocation.

http://www.FreeRTOS.org/Embedded-RTOS-Queues.html

Example usage:

```
struct AMessage
{
 char ucMessageID;
 char ucData[ 20 ];
};

#define QUEUE_LENGTH 10
#define ITEM_SIZE sizeof( uint32_t )

// xQueueBuffer will hold the queue structure.
StaticQueue_t xQueueBuffer;

// ucQueueStorage will hold the items posted to the queue.  Must be at least
// [(queue length) * ( queue item size)] bytes long.
uint8_t ucQueueStorage[ QUEUE_LENGTH * ITEM_SIZE ];

void vATask( void *pvParameters )
{
 QueueHandle_t xQueue1;

 // Create a queue capable of containing 10 uint32_t values.
 xQueue1 = xQueueCreate( QUEUE_LENGTH, // The number of items the queue can␣
↪hold.
                         ITEM_SIZE     // The size of each item in the queue
                         &( ucQueueStorage[ 0 ] ), // The buffer that will␣
↪hold the items in the queue.
                         &xQueueBuffer ); // The buffer that will hold the␣
↪queue structure.
```

(下页继续)

(续上页)

```
 // The queue is guaranteed to be created successfully as no dynamic memory
 // allocation is used.  Therefore xQueue1 is now a handle to a valid queue.

 // ... Rest of task code.
}
```

Return If the queue is created then a handle to the created queue is returned. If pxQueueBuffer is NULL then NULL is returned.

Parameters

- `uxQueueLength`: The maximum number of items that the queue can contain.
- `uxItemSize`: The number of bytes each item in the queue will require. Items are queued by copy, not by reference, so this is the number of bytes that will be copied for each posted item. Each item on the queue must be the same size.
- `pucQueueStorage`: If uxItemSize is not zero then pucQueueStorageBuffer must point to a uint8_t array that is at least large enough to hold the maximum number of items that can be in the queue at any one time - which is (uxQueueLength * uxItemsSize) bytes. If uxItemSize is zero then pucQueueStorageBuffer can be NULL.
- `pxQueueBuffer`: Must point to a variable of type StaticQueue_t, which will be used to hold the queue's data structure.

`xQueueSendToFront`(xQueue, pvItemToQueue, xTicksToWait)

Post an item to the front of a queue. The item is queued by copy, not by reference. This function must not be called from an interrupt service routine. See xQueueSendFromISR () for an alternative which may be used in an ISR.

Example usage:

```
struct AMessage
{
char ucMessageID;
char ucData[ 20 ];
} xMessage;

uint32_t ulVar = 10UL;

void vATask( void *pvParameters )
{
QueueHandle_t xQueue1, xQueue2;
struct AMessage *pxMessage;

// Create a queue capable of containing 10 uint32_t values.
xQueue1 = xQueueCreate( 10, sizeof( uint32_t ) );

// Create a queue capable of containing 10 pointers to AMessage structures.
// These should be passed by pointer as they contain a lot of data.
xQueue2 = xQueueCreate( 10, sizeof( struct AMessage * ) );

// ...

if( xQueue1 != 0 )
{
    // Send an uint32_t.  Wait for 10 ticks for space to become
    // available if necessary.
    if( xQueueSendToFront( xQueue1, ( void * ) &ulVar, ( TickType_t ) 10 ) !=␣
↪pdPASS )
    {
        // Failed to post the message, even after 10 ticks.
    }
}
```

(下页继续)

(续上页)

```
if( xQueue2 != 0 )
{
    // Send a pointer to a struct AMessage object.  Don't block if the
    // queue is already full.
    pxMessage = & xMessage;
    xQueueSendToFront( xQueue2, ( void * ) &pxMessage, ( TickType_t ) 0 );
}

// ... Rest of task code.
}
```

Return pdTRUE if the item was successfully posted, otherwise errQUEUE_FULL.

Parameters

- `xQueue`: The handle to the queue on which the item is to be posted.
- `pvItemToQueue`: A pointer to the item that is to be placed on the queue. The size of the items the queue will hold was defined when the queue was created, so this many bytes will be copied from pvItemToQueue into the queue storage area.
- `xTicksToWait`: The maximum amount of time the task should block waiting for space to become available on the queue, should it already be full. The call will return immediately if this is set to 0 and the queue is full. The time is defined in tick periods so the constant portTICK_PERIOD_MS should be used to convert to real time if this is required.

xQueueSendToBack(xQueue, pvItemToQueue, xTicksToWait)

This is a macro that calls xQueueGenericSend().

Post an item to the back of a queue. The item is queued by copy, not by reference. This function must not be called from an interrupt service routine. See xQueueSendFromISR () for an alternative which may be used in an ISR.

Example usage:

```
struct AMessage
{
char ucMessageID;
char ucData[ 20 ];
} xMessage;

uint32_t ulVar = 10UL;

void vATask( void *pvParameters )
{
QueueHandle_t xQueue1, xQueue2;
struct AMessage *pxMessage;

// Create a queue capable of containing 10 uint32_t values.
xQueue1 = xQueueCreate( 10, sizeof( uint32_t ) );

// Create a queue capable of containing 10 pointers to AMessage structures.
// These should be passed by pointer as they contain a lot of data.
xQueue2 = xQueueCreate( 10, sizeof( struct AMessage * ) );

// ...

if( xQueue1 != 0 )
{
    // Send an uint32_t.  Wait for 10 ticks for space to become
    // available if necessary.
    if( xQueueSendToBack( xQueue1, ( void * ) &ulVar, ( TickType_t ) 10 ) !=␣
↪pdPASS )
    {
```

(下页继续)

(续上页)

```
        // Failed to post the message, even after 10 ticks.
    }
}

if( xQueue2 != 0 )
{
    // Send a pointer to a struct AMessage object.  Don't block if the
    // queue is already full.
    pxMessage = & xMessage;
    xQueueSendToBack( xQueue2, ( void * ) &pxMessage, ( TickType_t ) 0 );
}

// ... Rest of task code.
}
```

Return pdTRUE if the item was successfully posted, otherwise errQUEUE_FULL.

Parameters

- `xQueue`: The handle to the queue on which the item is to be posted.
- `pvItemToQueue`: A pointer to the item that is to be placed on the queue. The size of the items the queue will hold was defined when the queue was created, so this many bytes will be copied from pvItemToQueue into the queue storage area.
- `xTicksToWait`: The maximum amount of time the task should block waiting for space to become available on the queue, should it already be full. The call will return immediately if this is set to 0 and the queue is full. The time is defined in tick periods so the constant portTICK_PERIOD_MS should be used to convert to real time if this is required.

xQueueSend (xQueue, pvItemToQueue, xTicksToWait)

This is a macro that calls xQueueGenericSend(). It is included for backward compatibility with versions of FreeRTOS.org that did not include the xQueueSendToFront() and xQueueSendToBack() macros. It is equivalent to xQueueSendToBack().

Post an item on a queue. The item is queued by copy, not by reference. This function must not be called from an interrupt service routine. See xQueueSendFromISR () for an alternative which may be used in an ISR.

Example usage:

```
struct AMessage
{
char ucMessageID;
char ucData[ 20 ];
} xMessage;

uint32_t ulVar = 10UL;

void vATask( void *pvParameters )
{
QueueHandle_t xQueue1, xQueue2;
struct AMessage *pxMessage;

// Create a queue capable of containing 10 uint32_t values.
xQueue1 = xQueueCreate( 10, sizeof( uint32_t ) );

// Create a queue capable of containing 10 pointers to AMessage structures.
// These should be passed by pointer as they contain a lot of data.
xQueue2 = xQueueCreate( 10, sizeof( struct AMessage * ) );

// ...

if( xQueue1 != 0 )
{
    // Send an uint32_t.  Wait for 10 ticks for space to become
```

(下页继续)

(续上页)

```
    // available if necessary.
    if( xQueueSend( xQueue1, ( void * ) &ulVar, ( TickType_t ) 10 ) != pdPASS )
    {
        // Failed to post the message, even after 10 ticks.
    }
}

if( xQueue2 != 0 )
{
    // Send a pointer to a struct AMessage object.  Don't block if the
    // queue is already full.
    pxMessage = & xMessage;
    xQueueSend( xQueue2, ( void * ) &pxMessage, ( TickType_t ) 0 );
}

// ... Rest of task code.
}
```

Return pdTRUE if the item was successfully posted, otherwise errQUEUE_FULL.

Parameters

- `xQueue`: The handle to the queue on which the item is to be posted.
- `pvItemToQueue`: A pointer to the item that is to be placed on the queue. The size of the items the queue will hold was defined when the queue was created, so this many bytes will be copied from pvItemToQueue into the queue storage area.
- `xTicksToWait`: The maximum amount of time the task should block waiting for space to become available on the queue, should it already be full. The call will return immediately if this is set to 0 and the queue is full. The time is defined in tick periods so the constant portTICK_PERIOD_MS should be used to convert to real time if this is required.

`xQueueOverwrite`(xQueue, pvItemToQueue)

Only for use with queues that have a length of one - so the queue is either empty or full.

Post an item on a queue. If the queue is already full then overwrite the value held in the queue. The item is queued by copy, not by reference.

This function must not be called from an interrupt service routine. See xQueueOverwriteFromISR () for an alternative which may be used in an ISR.

Example usage:

```
void vFunction( void *pvParameters )
{
QueueHandle_t xQueue;
uint32_t ulVarToSend, ulValReceived;

// Create a queue to hold one uint32_t value.  It is strongly
// recommended *not* to use xQueueOverwrite() on queues that can
// contain more than one value, and doing so will trigger an assertion
// if configASSERT() is defined.
xQueue = xQueueCreate( 1, sizeof( uint32_t ) );

// Write the value 10 to the queue using xQueueOverwrite().
ulVarToSend = 10;
xQueueOverwrite( xQueue, &ulVarToSend );

// Peeking the queue should now return 10, but leave the value 10 in
// the queue.  A block time of zero is used as it is known that the
// queue holds a value.
ulValReceived = 0;
xQueuePeek( xQueue, &ulValReceived, 0 );
```

(下页继续)

(续上页)

```
 if( ulValReceived != 10 )
 {
     // Error unless the item was removed by a different task.
 }

 // The queue is still full.  Use xQueueOverwrite() to overwrite the
 // value held in the queue with 100.
 ulVarToSend = 100;
 xQueueOverwrite( xQueue, &ulVarToSend );

 // This time read from the queue, leaving the queue empty once more.
 // A block time of 0 is used again.
 xQueueReceive( xQueue, &ulValReceived, 0 );

 // The value read should be the last value written, even though the
 // queue was already full when the value was written.
 if( ulValReceived != 100 )
 {
     // Error!
 }

 // ...
}
```

Return xQueueOverwrite() is a macro that calls xQueueGenericSend(), and therefore has the same return values as xQueueSendToFront(). However, pdPASS is the only value that can be returned because xQueueOverwrite() will write to the queue even when the queue is already full.

Parameters

- `xQueue`: The handle of the queue to which the data is being sent.
- `pvItemToQueue`: A pointer to the item that is to be placed on the queue. The size of the items the queue will hold was defined when the queue was created, so this many bytes will be copied from pvItemToQueue into the queue storage area.

`xQueueSendToFrontFromISR` (xQueue, pvItemToQueue, pxHigherPriorityTaskWoken)

This is a macro that calls xQueueGenericSendFromISR().

Post an item to the front of a queue. It is safe to use this macro from within an interrupt service routine.

Items are queued by copy not reference so it is preferable to only queue small items, especially when called from an ISR. In most cases it would be preferable to store a pointer to the item being queued.

Example usage for buffered IO (where the ISR can obtain more than one value per call):

```
void vBufferISR( void )
{
char cIn;
BaseType_t xHigherPrioritTaskWoken;

   // We have not woken a task at the start of the ISR.
   xHigherPriorityTaskWoken = pdFALSE;

   // Loop until the buffer is empty.
   do
   {
       // Obtain a byte from the buffer.
       cIn = portINPUT_BYTE( RX_REGISTER_ADDRESS );

       // Post the byte.
       xQueueSendToFrontFromISR( xRxQueue, &cIn, &xHigherPriorityTaskWoken );

   } while( portINPUT_BYTE( BUFFER_COUNT ) );
```

(下页继续)

(续上页)

```
    // Now the buffer is empty we can switch context if necessary.
    if( xHigherPriorityTaskWoken )
    {
        portYIELD_FROM_ISR ();
    }
}
```

Return pdTRUE if the data was successfully sent to the queue, otherwise errQUEUE_FULL.

Parameters

- `xQueue`: The handle to the queue on which the item is to be posted.
- `pvItemToQueue`: A pointer to the item that is to be placed on the queue. The size of the items the queue will hold was defined when the queue was created, so this many bytes will be copied from pvItemToQueue into the queue storage area.
- `[out] pxHigherPriorityTaskWoken`: xQueueSendToFrontFromISR() will set *pxHigherPriorityTaskWoken to pdTRUE if sending to the queue caused a task to unblock, and the unblocked task has a priority higher than the currently running task. If xQueueSendToFromFromISR() sets this value to pdTRUE then a context switch should be requested before the interrupt is exited.

xQueueSendToBackFromISR(xQueue, pvItemToQueue, pxHigherPriorityTaskWoken)

This is a macro that calls xQueueGenericSendFromISR().

Post an item to the back of a queue. It is safe to use this macro from within an interrupt service routine.

Items are queued by copy not reference so it is preferable to only queue small items, especially when called from an ISR. In most cases it would be preferable to store a pointer to the item being queued.

Example usage for buffered IO (where the ISR can obtain more than one value per call):

```
void vBufferISR( void )
{
char cIn;
BaseType_t xHigherPriorityTaskWoken;

    // We have not woken a task at the start of the ISR.
    xHigherPriorityTaskWoken = pdFALSE;

    // Loop until the buffer is empty.
    do
    {
        // Obtain a byte from the buffer.
        cIn = portINPUT_BYTE( RX_REGISTER_ADDRESS );

        // Post the byte.
        xQueueSendToBackFromISR( xRxQueue, &cIn, &xHigherPriorityTaskWoken );

    } while( portINPUT_BYTE( BUFFER_COUNT ) );

    // Now the buffer is empty we can switch context if necessary.
    if( xHigherPriorityTaskWoken )
    {
        portYIELD_FROM_ISR ();
    }
}
```

Return pdTRUE if the data was successfully sent to the queue, otherwise errQUEUE_FULL.

Parameters

- `xQueue`: The handle to the queue on which the item is to be posted.
- `pvItemToQueue`: A pointer to the item that is to be placed on the queue. The size of the items the queue will hold was defined when the queue was created, so this many bytes will be copied from pvItemToQueue into the queue storage area.
- `[out] pxHigherPriorityTaskWoken`: xQueueSendToBackFromISR() will set *pxHigherPriorityTaskWoken to pdTRUE if sending to the queue caused a task to unblock, and the un-

blocked task has a priority higher than the currently running task. If xQueueSendToBackFromISR() sets this value to pdTRUE then a context switch should be requested before the interrupt is exited.

xQueueOverwriteFromISR(xQueue, pvItemToQueue, pxHigherPriorityTaskWoken)

A version of xQueueOverwrite() that can be used in an interrupt service routine (ISR).

Only for use with queues that can hold a single item - so the queue is either empty or full.

Post an item on a queue. If the queue is already full then overwrite the value held in the queue. The item is queued by copy, not by reference.

Example usage:

```
 QueueHandle_t xQueue;

 void vFunction( void *pvParameters )
 {
    // Create a queue to hold one uint32_t value.  It is strongly
    // recommended *not* to use xQueueOverwriteFromISR() on queues that can
    // contain more than one value, and doing so will trigger an assertion
    // if configASSERT() is defined.
    xQueue = xQueueCreate( 1, sizeof( uint32_t ) );
}

void vAnInterruptHandler( void )
{
// xHigherPriorityTaskWoken must be set to pdFALSE before it is used.
BaseType_t xHigherPriorityTaskWoken = pdFALSE;
uint32_t ulVarToSend, ulValReceived;

    // Write the value 10 to the queue using xQueueOverwriteFromISR().
    ulVarToSend = 10;
    xQueueOverwriteFromISR( xQueue, &ulVarToSend, &xHigherPriorityTaskWoken );

    // The queue is full, but calling xQueueOverwriteFromISR() again will still
    // pass because the value held in the queue will be overwritten with the
    // new value.
    ulVarToSend = 100;
    xQueueOverwriteFromISR( xQueue, &ulVarToSend, &xHigherPriorityTaskWoken );

    // Reading from the queue will now return 100.

    // ...

    if( xHigherPrioritytaskWoken == pdTRUE )
    {
        // Writing to the queue caused a task to unblock and the unblocked task
        // has a priority higher than or equal to the priority of the currently
        // executing task (the task this interrupt interrupted).  Perform a␣
↪context
        // switch so this interrupt returns directly to the unblocked task.
        portYIELD_FROM_ISR(); // or portEND_SWITCHING_ISR() depending on the␣
↪port.
    }
}
```

Return xQueueOverwriteFromISR() is a macro that calls xQueueGenericSendFromISR(), and therefore has the same return values as xQueueSendToFrontFromISR(). However, pdPASS is the only value that can be returned because xQueueOverwriteFromISR() will write to the queue even when the queue is already full.

Parameters

- `xQueue`: The handle to the queue on which the item is to be posted.
- `pvItemToQueue`: A pointer to the item that is to be placed on the queue. The size of the items the queue will hold was defined when the queue was created, so this many bytes will be copied from

pvItemToQueue into the queue storage area.

- `[out] pxHigherPriorityTaskWoken`: xQueueOverwriteFromISR() will set *pxHigherPriorityTaskWoken to pdTRUE if sending to the queue caused a task to unblock, and the unblocked task has a priority higher than the currently running task. If xQueueOverwriteFromISR() sets this value to pdTRUE then a context switch should be requested before the interrupt is exited.

xQueueSendFromISR(xQueue, pvItemToQueue, pxHigherPriorityTaskWoken)

This is a macro that calls xQueueGenericSendFromISR(). It is included for backward compatibility with versions of FreeRTOS.org that did not include the xQueueSendToBackFromISR() and xQueueSendToFrontFromISR() macros.

Post an item to the back of a queue. It is safe to use this function from within an interrupt service routine.

Items are queued by copy not reference so it is preferable to only queue small items, especially when called from an ISR. In most cases it would be preferable to store a pointer to the item being queued.

Example usage for buffered IO (where the ISR can obtain more than one value per call):

```
void vBufferISR( void )
{
char cIn;
BaseType_t xHigherPriorityTaskWoken;

    // We have not woken a task at the start of the ISR.
    xHigherPriorityTaskWoken = pdFALSE;

    // Loop until the buffer is empty.
    do
    {
        // Obtain a byte from the buffer.
        cIn = portINPUT_BYTE( RX_REGISTER_ADDRESS );

        // Post the byte.
        xQueueSendFromISR( xRxQueue, &cIn, &xHigherPriorityTaskWoken );

    } while( portINPUT_BYTE( BUFFER_COUNT ) );

    // Now the buffer is empty we can switch context if necessary.
    if( xHigherPriorityTaskWoken )
    {
        // Actual macro used here is port specific.
        portYIELD_FROM_ISR ();
    }
}
```

Return pdTRUE if the data was successfully sent to the queue, otherwise errQUEUE_FULL.

Parameters

- `xQueue`: The handle to the queue on which the item is to be posted.
- `pvItemToQueue`: A pointer to the item that is to be placed on the queue. The size of the items the queue will hold was defined when the queue was created, so this many bytes will be copied from pvItemToQueue into the queue storage area.
- `[out] pxHigherPriorityTaskWoken`: xQueueSendFromISR() will set *pxHigherPriorityTaskWoken to pdTRUE if sending to the queue caused a task to unblock, and the unblocked task has a priority higher than the currently running task. If xQueueSendFromISR() sets this value to pdTRUE then a context switch should be requested before the interrupt is exited.

xQueueReset(xQueue)

Reset a queue back to its original empty state. The return value is now obsolete and is always set to pdPASS.

Type Definitions

typedef struct QueueDefinition ***QueueHandle_t**

typedef struct QueueDefinition ***QueueSetHandle_t**

Type by which queue sets are referenced. For example, a call to xQueueCreateSet() returns an xQueueSet variable that can then be used as a parameter to xQueueSelectFromSet(), xQueueAddToSet(), etc.

typedef struct QueueDefinition ***QueueSetMemberHandle_t**

Queue sets can contain both queues and semaphores, so the QueueSetMemberHandle_t is defined as a type to be used where a parameter or return value can be either an QueueHandle_t or an SemaphoreHandle_t.

Semaphore API

Header File

- freertos/include/freertos/semphr.h

Macros

semBINARY_SEMAPHORE_QUEUE_LENGTH
semSEMAPHORE_QUEUE_ITEM_LENGTH

semGIVE_BLOCK_TIME

xSemaphoreCreateBinary()

Creates a new binary semaphore instance, and returns a handle by which the new semaphore can be referenced.

In many usage scenarios it is faster and more memory efficient to use a direct to task notification in place of a binary semaphore! http://www.freertos.org/RTOS-task-notifications.html

Internally, within the FreeRTOS implementation, binary semaphores use a block of memory, in which the semaphore structure is stored. If a binary semaphore is created using xSemaphoreCreateBinary() then the required memory is automatically dynamically allocated inside the xSemaphoreCreateBinary() function. (see http://www.freertos.org/a00111.html). If a binary semaphore is created using xSemaphoreCreateBinaryStatic() then the application writer must provide the memory. xSemaphoreCreateBinaryStatic() therefore allows a binary semaphore to be created without using any dynamic memory allocation.

The old vSemaphoreCreateBinary() macro is now deprecated in favour of this xSemaphoreCreateBinary() function. Note that binary semaphores created using the vSemaphoreCreateBinary() macro are created in a state such that the first call to 'take' the semaphore would pass, whereas binary semaphores created using xSemaphoreCreateBinary() are created in a state such that the the semaphore must first be 'given' before it can be 'taken'.

This type of semaphore can be used for pure synchronisation between tasks or between an interrupt and a task. The semaphore need not be given back once obtained, so one task/interrupt can continuously 'give' the semaphore while another continuously 'takes' the semaphore. For this reason this type of semaphore does not use a priority inheritance mechanism. For an alternative that does use priority inheritance see xSemaphoreCreateMutex().

Example usage:

```
SemaphoreHandle_t xSemaphore = NULL;

void vATask( void * pvParameters )
{
   // Semaphore cannot be used before a call to vSemaphoreCreateBinary ().
   // This is a macro so pass the variable in directly.
   xSemaphore = xSemaphoreCreateBinary();

   if( xSemaphore != NULL )
   {
       // The semaphore was created successfully.
       // The semaphore can now be used.
   }
}
```

Return Handle to the created semaphore, or NULL if the memory required to hold the semaphore's data structures could not be allocated.

xSemaphoreCreateBinaryStatic(pxStaticSemaphore)

Creates a new binary semaphore instance, and returns a handle by which the new semaphore can be referenced.

NOTE: In many usage scenarios it is faster and more memory efficient to use a direct to task notification in place of a binary semaphore! http://www.freertos.org/RTOS-task-notifications.html

Internally, within the FreeRTOS implementation, binary semaphores use a block of memory, in which the semaphore structure is stored. If a binary semaphore is created using xSemaphoreCreateBinary() then the required memory is automatically dynamically allocated inside the xSemaphoreCreateBinary() function. (see http://www.freertos.org/a00111.html). If a binary semaphore is created using xSemaphoreCreateBinaryStatic() then the application writer must provide the memory. xSemaphoreCreateBinaryStatic() therefore allows a binary semaphore to be created without using any dynamic memory allocation.

This type of semaphore can be used for pure synchronisation between tasks or between an interrupt and a task. The semaphore need not be given back once obtained, so one task/interrupt can continuously 'give' the semaphore while another continuously 'takes' the semaphore. For this reason this type of semaphore does not use a priority inheritance mechanism. For an alternative that does use priority inheritance see xSemaphoreCreateMutex().

Example usage:

```
SemaphoreHandle_t xSemaphore = NULL;
StaticSemaphore_t xSemaphoreBuffer;

void vATask( void * pvParameters )
{
   // Semaphore cannot be used before a call to xSemaphoreCreateBinary() or
   // xSemaphoreCreateBinaryStatic().
   // The semaphore's data structures will be placed in the xSemaphoreBuffer
   // variable, the address of which is passed into the function.  The
   // function's parameter is not NULL, so the function will not attempt any
   // dynamic memory allocation, and therefore the function will not return
   // return NULL.
   xSemaphore = xSemaphoreCreateBinaryStatic( &xSemaphoreBuffer );

   // Rest of task code goes here.
}
```

Return If the semaphore is created then a handle to the created semaphore is returned. If pxSemaphoreBuffer is NULL then NULL is returned.

Parameters

- `pxStaticSemaphore`: Must point to a variable of type StaticSemaphore_t, which will then be used to hold the semaphore's data structure, removing the need for the memory to be allocated dynamically.

xSemaphoreTake(xSemaphore, xBlockTime)

Macro to obtain a semaphore. The semaphore must have previously been created with a call to xSemaphoreCreateBinary(), xSemaphoreCreateMutex() or xSemaphoreCreateCounting().

Example usage:

```
SemaphoreHandle_t xSemaphore = NULL;

// A task that creates a semaphore.
void vATask( void * pvParameters )
{
   // Create the semaphore to guard a shared resource.
   vSemaphoreCreateBinary( xSemaphore );
}
```

(下页继续)

(续上页)

```
// A task that uses the semaphore.
void vAnotherTask( void * pvParameters )
{
   // ... Do other things.

   if( xSemaphore != NULL )
   {
       // See if we can obtain the semaphore.  If the semaphore is not␣
↪available
       // wait 10 ticks to see if it becomes free.
       if( xSemaphoreTake( xSemaphore, ( TickType_t ) 10 ) == pdTRUE )
       {
           // We were able to obtain the semaphore and can now access the
           // shared resource.

           // ...

           // We have finished accessing the shared resource.  Release the
           // semaphore.
           xSemaphoreGive( xSemaphore );
       }
       else
       {
           // We could not obtain the semaphore and can therefore not access
           // the shared resource safely.
       }
   }
}
```

Return pdTRUE if the semaphore was obtained. pdFALSE if xBlockTime expired without the semaphore becoming available.

Parameters

- `xSemaphore`: A handle to the semaphore being taken - obtained when the semaphore was created.
- `xBlockTime`: The time in ticks to wait for the semaphore to become available. The macro portTICK_PERIOD_MS can be used to convert this to a real time. A block time of zero can be used to poll the semaphore. A block time of portMAX_DELAY can be used to block indefinitely (provided INCLUDE_vTaskSuspend is set to 1 in FreeRTOSConfig.h).

`xSemaphoreTakeRecursive`(xMutex, xBlockTime)

Macro to recursively obtain, or ‘take’, a mutex type semaphore. The mutex must have previously been created using a call to xSemaphoreCreateRecursiveMutex();

configUSE_RECURSIVE_MUTEXES must be set to 1 in FreeRTOSConfig.h for this macro to be available.

This macro must not be used on mutexes created using xSemaphoreCreateMutex().

A mutex used recursively can be ‘taken’ repeatedly by the owner. The mutex doesn’t become available again until the owner has called xSemaphoreGiveRecursive() for each successful ‘take’ request. For example, if a task successfully ‘takes’ the same mutex 5 times then the mutex will not be available to any other task until it has also ‘given’ the mutex back exactly five times.

Example usage:

```
SemaphoreHandle_t xMutex = NULL;

// A task that creates a mutex.
void vATask( void * pvParameters )
{
   // Create the mutex to guard a shared resource.
   xMutex = xSemaphoreCreateRecursiveMutex();
}
```

(下页继续)

(续上页)

```
// A task that uses the mutex.
void vAnotherTask( void * pvParameters )
{
   // ... Do other things.

   if( xMutex != NULL )
   {
       // See if we can obtain the mutex.  If the mutex is not available
       // wait 10 ticks to see if it becomes free.
       if( xSemaphoreTakeRecursive( xSemaphore, ( TickType_t ) 10 ) == pdTRUE )
       {
           // We were able to obtain the mutex and can now access the
           // shared resource.

           // ...
           // For some reason due to the nature of the code further calls to
           // xSemaphoreTakeRecursive() are made on the same mutex.  In real
           // code these would not be just sequential calls as this would make
           // no sense.  Instead the calls are likely to be buried inside
           // a more complex call structure.
           xSemaphoreTakeRecursive( xMutex, ( TickType_t ) 10 );
           xSemaphoreTakeRecursive( xMutex, ( TickType_t ) 10 );

           // The mutex has now been 'taken' three times, so will not be
           // available to another task until it has also been given back
           // three times.  Again it is unlikely that real code would have
           // these calls sequentially, but instead buried in a more complex
           // call structure.  This is just for illustrative purposes.
           xSemaphoreGiveRecursive( xMutex );
           xSemaphoreGiveRecursive( xMutex );
           xSemaphoreGiveRecursive( xMutex );

           // Now the mutex can be taken by other tasks.
       }
       else
       {
           // We could not obtain the mutex and can therefore not access
           // the shared resource safely.
       }
   }
}
```

Return pdTRUE if the semaphore was obtained. pdFALSE if xBlockTime expired without the semaphore becoming available.

Parameters

- `xMutex`: A handle to the mutex being obtained. This is the handle returned by xSemaphoreCreateRecursiveMutex();
- `xBlockTime`: The time in ticks to wait for the semaphore to become available. The macro portTICK_PERIOD_MS can be used to convert this to a real time. A block time of zero can be used to poll the semaphore. If the task already owns the semaphore then xSemaphoreTakeRecursive() will return immediately no matter what the value of xBlockTime.

xSemaphoreGive(xSemaphore)

Macro to release a semaphore. The semaphore must have previously been created with a call to xSemaphoreCreateBinary(), xSemaphoreCreateMutex() or xSemaphoreCreateCounting(). and obtained using sSemaphoreTake().

This macro must not be used from an ISR. See xSemaphoreGiveFromISR () for an alternative which can be used from an ISR.

This macro must also not be used on semaphores created using xSemaphoreCreateRecursiveMutex().

Example usage:

```
SemaphoreHandle_t xSemaphore = NULL;

void vATask( void * pvParameters )
{
   // Create the semaphore to guard a shared resource.
   vSemaphoreCreateBinary( xSemaphore );

   if( xSemaphore != NULL )
   {
       if( xSemaphoreGive( xSemaphore ) != pdTRUE )
       {
           // We would expect this call to fail because we cannot give
           // a semaphore without first "taking" it!
       }

       // Obtain the semaphore - don't block if the semaphore is not
       // immediately available.
       if( xSemaphoreTake( xSemaphore, ( TickType_t ) 0 ) )
       {
           // We now have the semaphore and can access the shared resource.

           // ...

           // We have finished accessing the shared resource so can free the
           // semaphore.
           if( xSemaphoreGive( xSemaphore ) != pdTRUE )
           {
               // We would not expect this call to fail because we must have
               // obtained the semaphore to get here.
           }
       }
   }
}
```

Return pdTRUE if the semaphore was released. pdFALSE if an error occurred. Semaphores are implemented using queues. An error can occur if there is no space on the queue to post a message - indicating that the semaphore was not first obtained correctly.

Parameters

- `xSemaphore`: A handle to the semaphore being released. This is the handle returned when the semaphore was created.

`xSemaphoreGiveRecursive`(xMutex)

semphr. h

Macro to recursively release, or ‘give’, a mutex type semaphore. The mutex must have previously been created using a call to xSemaphoreCreateRecursiveMutex();

configUSE_RECURSIVE_MUTEXES must be set to 1 in FreeRTOSConfig.h for this macro to be available.

This macro must not be used on mutexes created using xSemaphoreCreateMutex().

A mutex used recursively can be ‘taken’ repeatedly by the owner. The mutex doesn’t become available again until the owner has called xSemaphoreGiveRecursive() for each successful ‘take’ request. For example, if a task successfully ‘takes’ the same mutex 5 times then the mutex will not be available to any other task until it has also ‘given’ the mutex back exactly five times.

Example usage:

```
SemaphoreHandle_t xMutex = NULL;

// A task that creates a mutex.
void vATask( void * pvParameters )
```

(下页继续)

(续上页)

```
{
   // Create the mutex to guard a shared resource.
   xMutex = xSemaphoreCreateRecursiveMutex();
}

// A task that uses the mutex.
void vAnotherTask( void * pvParameters )
{
   // ... Do other things.

   if( xMutex != NULL )
   {
       // See if we can obtain the mutex.  If the mutex is not available
       // wait 10 ticks to see if it becomes free.
       if( xSemaphoreTakeRecursive( xMutex, ( TickType_t ) 10 ) == pdTRUE )
       {
           // We were able to obtain the mutex and can now access the
           // shared resource.

           // ...
           // For some reason due to the nature of the code further calls to
           // xSemaphoreTakeRecursive() are made on the same mutex.  In real
           // code these would not be just sequential calls as this would make
           // no sense.  Instead the calls are likely to be buried inside
           // a more complex call structure.
           xSemaphoreTakeRecursive( xMutex, ( TickType_t ) 10 );
           xSemaphoreTakeRecursive( xMutex, ( TickType_t ) 10 );

           // The mutex has now been 'taken' three times, so will not be
           // available to another task until it has also been given back
           // three times.  Again it is unlikely that real code would have
           // these calls sequentially, it would be more likely that the calls
           // to xSemaphoreGiveRecursive() would be called as a call stack
           // unwound.  This is just for demonstrative purposes.
           xSemaphoreGiveRecursive( xMutex );
           xSemaphoreGiveRecursive( xMutex );
           xSemaphoreGiveRecursive( xMutex );

           // Now the mutex can be taken by other tasks.
       }
       else
       {
           // We could not obtain the mutex and can therefore not access
           // the shared resource safely.
       }
   }
}
```

Return pdTRUE if the semaphore was given.

Parameters

- `xMutex`: A handle to the mutex being released, or 'given'. This is the handle returned by xSemaphoreCreateMutex();

xSemaphoreGiveFromISR (xSemaphore, pxHigherPriorityTaskWoken)

Macro to release a semaphore. The semaphore must have previously been created with a call to xSemaphoreCreateBinary() or xSemaphoreCreateCounting().

Mutex type semaphores (those created using a call to xSemaphoreCreateMutex()) must not be used with this macro.

This macro can be used from an ISR.

Example usage:

```
\#define LONG_TIME 0xffff
\#define TICKS_TO_WAIT 10
SemaphoreHandle_t xSemaphore = NULL;

// Repetitive task.
void vATask( void * pvParameters )
{
   for( ;; )
   {
       // We want this task to run every 10 ticks of a timer.  The semaphore
       // was created before this task was started.

       // Block waiting for the semaphore to become available.
       if( xSemaphoreTake( xSemaphore, LONG_TIME ) == pdTRUE )
       {
           // It is time to execute.

           // ...

           // We have finished our task.  Return to the top of the loop where
           // we will block on the semaphore until it is time to execute
           // again.  Note when using the semaphore for synchronisation with an
           // ISR in this manner there is no need to 'give' the semaphore back.
       }
   }
}

// Timer ISR
void vTimerISR( void * pvParameters )
{
static uint8_t ucLocalTickCount = 0;
static BaseType_t xHigherPriorityTaskWoken;

   // A timer tick has occurred.

   // ... Do other time functions.

   // Is it time for vATask () to run?
   xHigherPriorityTaskWoken = pdFALSE;
   ucLocalTickCount++;
   if( ucLocalTickCount >= TICKS_TO_WAIT )
   {
       // Unblock the task by releasing the semaphore.
       xSemaphoreGiveFromISR( xSemaphore, &xHigherPriorityTaskWoken );

       // Reset the count so we release the semaphore again in 10 ticks time.
       ucLocalTickCount = 0;
   }

   if( xHigherPriorityTaskWoken != pdFALSE )
   {
       // We can force a context switch here.  Context switching from an
       // ISR uses port specific syntax.  Check the demo task for your port
       // to find the syntax required.
   }
}
```

Return pdTRUE if the semaphore was successfully given, otherwise errQUEUE_FULL.

Parameters

- `xSemaphore`: A handle to the semaphore being released. This is the handle returned when the semaphore was created.
- `pxHigherPriorityTaskWoken`: xSemaphoreGiveFromISR() will set *pxHigherPriority-

TaskWoken to pdTRUE if giving the semaphore caused a task to unblock, and the unblocked task has a priority higher than the currently running task. If xSemaphoreGiveFromISR() sets this value to pdTRUE then a context switch should be requested before the interrupt is exited.

xSemaphoreTakeFromISR(xSemaphore, pxHigherPriorityTaskWoken)

Macro to take a semaphore from an ISR. The semaphore must have previously been created with a call to xSemaphoreCreateBinary() or xSemaphoreCreateCounting().

Mutex type semaphores (those created using a call to xSemaphoreCreateMutex()) must not be used with this macro.

This macro can be used from an ISR, however taking a semaphore from an ISR is not a common operation. It is likely to only be useful when taking a counting semaphore when an interrupt is obtaining an object from a resource pool (when the semaphore count indicates the number of resources available).

Return pdTRUE if the semaphore was successfully taken, otherwise pdFALSE

Parameters

- `xSemaphore`: A handle to the semaphore being taken. This is the handle returned when the semaphore was created.
- `[out] pxHigherPriorityTaskWoken`: xSemaphoreTakeFromISR() will set *pxHigherPriorityTaskWoken to pdTRUE if taking the semaphore caused a task to unblock, and the unblocked task has a priority higher than the currently running task. If xSemaphoreTakeFromISR() sets this value to pdTRUE then a context switch should be requested before the interrupt is exited.

xSemaphoreCreateMutex()

Macro that implements a mutex semaphore by using the existing queue mechanism.

Internally, within the FreeRTOS implementation, mutex semaphores use a block of memory, in which the mutex structure is stored. If a mutex is created using xSemaphoreCreateMutex() then the required memory is automatically dynamically allocated inside the xSemaphoreCreateMutex() function. (see http://www.freertos.org/a00111.html). If a mutex is created using xSemaphoreCreateMutexStatic() then the application writer must provided the memory. xSemaphoreCreateMutexStatic() therefore allows a mutex to be created without using any dynamic memory allocation.

Mutexes created using this function can be accessed using the xSemaphoreTake() and xSemaphoreGive() macros. The xSemaphoreTakeRecursive() and xSemaphoreGiveRecursive() macros must not be used.

This type of semaphore uses a priority inheritance mechanism so a task ‘taking’ a semaphore MUST ALWAYS ‘give’ the semaphore back once the semaphore it is no longer required.

Mutex type semaphores cannot be used from within interrupt service routines.

See xSemaphoreCreateBinary() for an alternative implementation that can be used for pure synchronisation (where one task or interrupt always ‘gives’ the semaphore and another always ‘takes’ the semaphore) and from within interrupt service routines.

Example usage:

```
SemaphoreHandle_t xSemaphore;

void vATask( void * pvParameters )
{
   // Semaphore cannot be used before a call to xSemaphoreCreateMutex().
   // This is a macro so pass the variable in directly.
   xSemaphore = xSemaphoreCreateMutex();

   if( xSemaphore != NULL )
   {
       // The semaphore was created successfully.
       // The semaphore can now be used.
   }
}
```

Return If the mutex was successfully created then a handle to the created semaphore is returned. If there was not enough heap to allocate the mutex data structures then NULL is returned.

xSemaphoreCreateMutexStatic(pxMutexBuffer)

Creates a new mutex type semaphore instance, and returns a handle by which the new mutex can be referenced.

Internally, within the FreeRTOS implementation, mutex semaphores use a block of memory, in which the mutex structure is stored. If a mutex is created using xSemaphoreCreateMutex() then the required memory is automatically dynamically allocated inside the xSemaphoreCreateMutex() function. (see http://www.freertos.org/a00111.html). If a mutex is created using xSemaphoreCreateMutexStatic() then the application writer must provided the memory. xSemaphoreCreateMutexStatic() therefore allows a mutex to be created without using any dynamic memory allocation.

Mutexes created using this function can be accessed using the xSemaphoreTake() and xSemaphoreGive() macros. The xSemaphoreTakeRecursive() and xSemaphoreGiveRecursive() macros must not be used.

This type of semaphore uses a priority inheritance mechanism so a task ‘taking’ a semaphore MUST ALWAYS ‘give’ the semaphore back once the semaphore it is no longer required.

Mutex type semaphores cannot be used from within interrupt service routines.

See xSemaphoreCreateBinary() for an alternative implementation that can be used for pure synchronisation (where one task or interrupt always ‘gives’ the semaphore and another always ‘takes’ the semaphore) and from within interrupt service routines.

Example usage:

```
SemaphoreHandle_t xSemaphore;
StaticSemaphore_t xMutexBuffer;

void vATask( void * pvParameters )
{
   // A mutex cannot be used before it has been created.  xMutexBuffer is
   // into xSemaphoreCreateMutexStatic() so no dynamic memory allocation is
   // attempted.
   xSemaphore = xSemaphoreCreateMutexStatic( &xMutexBuffer );

   // As no dynamic memory allocation was performed, xSemaphore cannot be NULL,
   // so there is no need to check it.
}
```

Return If the mutex was successfully created then a handle to the created mutex is returned. If pxMutexBuffer was NULL then NULL is returned.

Parameters

- `pxMutexBuffer`: Must point to a variable of type StaticSemaphore_t, which will be used to hold the mutex’s data structure, removing the need for the memory to be allocated dynamically.

xSemaphoreCreateRecursiveMutex()

Creates a new recursive mutex type semaphore instance, and returns a handle by which the new recursive mutex can be referenced.

Internally, within the FreeRTOS implementation, recursive mutexs use a block of memory, in which the mutex structure is stored. If a recursive mutex is created using xSemaphoreCreateRecursiveMutex() then the required memory is automatically dynamically allocated inside the xSemaphoreCreateRecursiveMutex() function. (see http://www.freertos.org/a00111.html). If a recursive mutex is created using xSemaphoreCreateRecursiveMutexStatic() then the application writer must provide the memory that will get used by the mutex. xSemaphoreCreateRecursiveMutexStatic() therefore allows a recursive mutex to be created without using any dynamic memory allocation.

Mutexes created using this macro can be accessed using the xSemaphoreTakeRecursive() and xSemaphoreGiveRecursive() macros. The xSemaphoreTake() and xSemaphoreGive() macros must not be used.

A mutex used recursively can be ‘taken’ repeatedly by the owner. The mutex doesn’t become available again until the owner has called xSemaphoreGiveRecursive() for each successful ‘take’ request. For example, if a task successfully ‘takes’ the same mutex 5 times then the mutex will not be available to any other task until it has also ‘given’ the mutex back exactly five times.

This type of semaphore uses a priority inheritance mechanism so a task ‘taking’ a semaphore MUST ALWAYS ‘give’ the semaphore back once the semaphore it is no longer required.

Mutex type semaphores cannot be used from within interrupt service routines.

See vSemaphoreCreateBinary() for an alternative implementation that can be used for pure synchronisation (where one task or interrupt always ‘gives’ the semaphore and another always ‘takes’ the semaphore) and from within interrupt service routines.

Example usage:

```
SemaphoreHandle_t xSemaphore;

void vATask( void * pvParameters )
{
   // Semaphore cannot be used before a call to xSemaphoreCreateMutex().
   // This is a macro so pass the variable in directly.
   xSemaphore = xSemaphoreCreateRecursiveMutex();

   if( xSemaphore != NULL )
   {
       // The semaphore was created successfully.
       // The semaphore can now be used.
   }
}
```

Return xSemaphore Handle to the created mutex semaphore. Should be of type SemaphoreHandle_t.

xSemaphoreCreateRecursiveMutexStatic(pxStaticSemaphore)

Creates a new recursive mutex type semaphore instance, and returns a handle by which the new recursive mutex can be referenced.

Internally, within the FreeRTOS implementation, recursive mutexs use a block of memory, in which the mutex structure is stored. If a recursive mutex is created using xSemaphoreCreateRecursiveMutex() then the required memory is automatically dynamically allocated inside the xSemaphoreCreateRecursiveMutex() function. (see http://www.freertos.org/a00111.html). If a recursive mutex is created using xSemaphoreCreateRecursiveMutexStatic() then the application writer must provide the memory that will get used by the mutex. xSemaphoreCreateRecursiveMutexStatic() therefore allows a recursive mutex to be created without using any dynamic memory allocation.

Mutexes created using this macro can be accessed using the xSemaphoreTakeRecursive() and xSemaphoreGiveRecursive() macros. The xSemaphoreTake() and xSemaphoreGive() macros must not be used.

A mutex used recursively can be ‘taken’ repeatedly by the owner. The mutex doesn’t become available again until the owner has called xSemaphoreGiveRecursive() for each successful ‘take’ request. For example, if a task successfully ‘takes’ the same mutex 5 times then the mutex will not be available to any other task until it has also ‘given’ the mutex back exactly five times.

This type of semaphore uses a priority inheritance mechanism so a task ‘taking’ a semaphore MUST ALWAYS ‘give’ the semaphore back once the semaphore it is no longer required.

Mutex type semaphores cannot be used from within interrupt service routines.

See xSemaphoreCreateBinary() for an alternative implementation that can be used for pure synchronisation (where one task or interrupt always ‘gives’ the semaphore and another always ‘takes’ the semaphore) and from within interrupt service routines.

Example usage:

```
SemaphoreHandle_t xSemaphore;
StaticSemaphore_t xMutexBuffer;

void vATask( void * pvParameters )
{
   // A recursive semaphore cannot be used before it is created.  Here a
```

(下页继续)

(续上页)

```
    // recursive mutex is created using xSemaphoreCreateRecursiveMutexStatic().
    // The address of xMutexBuffer is passed into the function, and will hold
    // the mutexes data structures - so no dynamic memory allocation will be
    // attempted.
    xSemaphore = xSemaphoreCreateRecursiveMutexStatic( &xMutexBuffer );

    // As no dynamic memory allocation was performed, xSemaphore cannot be NULL,
    // so there is no need to check it.
}
```

Return If the recursive mutex was successfully created then a handle to the created recursive mutex is returned. If pxMutexBuffer was NULL then NULL is returned.

Parameters

- `pxStaticSemaphore`: Must point to a variable of type StaticSemaphore_t, which will then be used to hold the recursive mutex's data structure, removing the need for the memory to be allocated dynamically.

`xSemaphoreCreateCounting`(uxMaxCount, uxInitialCount)

Creates a new counting semaphore instance, and returns a handle by which the new counting semaphore can be referenced.

In many usage scenarios it is faster and more memory efficient to use a direct to task notification in place of a counting semaphore! http://www.freertos.org/RTOS-task-notifications.html

Internally, within the FreeRTOS implementation, counting semaphores use a block of memory, in which the counting semaphore structure is stored. If a counting semaphore is created using xSemaphoreCreateCounting() then the required memory is automatically dynamically allocated inside the xSemaphoreCreateCounting() function. (see http://www.freertos.org/a00111.html). If a counting semaphore is created using xSemaphoreCreateCountingStatic() then the application writer can instead optionally provide the memory that will get used by the counting semaphore. xSemaphoreCreateCountingStatic() therefore allows a counting semaphore to be created without using any dynamic memory allocation.

Counting semaphores are typically used for two things:

1) Counting events.

In this usage scenario an event handler will 'give' a semaphore each time an event occurs (incrementing the semaphore count value), and a handler task will 'take' a semaphore each time it processes an event (decrementing the semaphore count value). The count value is therefore the difference between the number of events that have occurred and the number that have been processed. In this case it is desirable for the initial count value to be zero.

2) Resource management.

In this usage scenario the count value indicates the number of resources available. To obtain control of a resource a task must first obtain a semaphore - decrementing the semaphore count value. When the count value reaches zero there are no free resources. When a task finishes with the resource it 'gives' the semaphore back - incrementing the semaphore count value. In this case it is desirable for the initial count value to be equal to the maximum count value, indicating that all resources are free.

Example usage:

```
SemaphoreHandle_t xSemaphore;

void vATask( void * pvParameters )
{
SemaphoreHandle_t xSemaphore = NULL;

    // Semaphore cannot be used before a call to xSemaphoreCreateCounting().
    // The max value to which the semaphore can count should be 10, and the
    // initial value assigned to the count should be 0.
    xSemaphore = xSemaphoreCreateCounting( 10, 0 );
```

(下页继续)

(续上页)

```
    if( xSemaphore != NULL )
    {
        // The semaphore was created successfully.
        // The semaphore can now be used.
    }
}
```

Return Handle to the created semaphore. Null if the semaphore could not be created.

Parameters

- `uxMaxCount`: The maximum count value that can be reached. When the semaphore reaches this value it can no longer be ‘given’.
- `uxInitialCount`: The count value assigned to the semaphore when it is created.

`xSemaphoreCreateCountingStatic`(uxMaxCount, uxInitialCount, pxSemaphoreBuffer)

Creates a new counting semaphore instance, and returns a handle by which the new counting semaphore can be referenced.

In many usage scenarios it is faster and more memory efficient to use a direct to task notification in place of a counting semaphore! http://www.freertos.org/RTOS-task-notifications.html

Internally, within the FreeRTOS implementation, counting semaphores use a block of memory, in which the counting semaphore structure is stored. If a counting semaphore is created using xSemaphoreCreateCounting() then the required memory is automatically dynamically allocated inside the xSemaphoreCreateCounting() function. (see http://www.freertos.org/a00111.html). If a counting semaphore is created using xSemaphoreCreateCountingStatic() then the application writer must provide the memory. xSemaphoreCreateCountingStatic() therefore allows a counting semaphore to be created without using any dynamic memory allocation.

Counting semaphores are typically used for two things:

1) Counting events.

In this usage scenario an event handler will ‘give’ a semaphore each time an event occurs (incrementing the semaphore count value), and a handler task will ‘take’ a semaphore each time it processes an event (decrementing the semaphore count value). The count value is therefore the difference between the number of events that have occurred and the number that have been processed. In this case it is desirable for the initial count value to be zero.

2) Resource management.

In this usage scenario the count value indicates the number of resources available. To obtain control of a resource a task must first obtain a semaphore - decrementing the semaphore count value. When the count value reaches zero there are no free resources. When a task finishes with the resource it ‘gives’ the semaphore back - incrementing the semaphore count value. In this case it is desirable for the initial count value to be equal to the maximum count value, indicating that all resources are free.

Example usage:

```
SemaphoreHandle_t xSemaphore;
StaticSemaphore_t xSemaphoreBuffer;

void vATask( void * pvParameters )
{
SemaphoreHandle_t xSemaphore = NULL;

   // Counting semaphore cannot be used before they have been created.  Create
   // a counting semaphore using xSemaphoreCreateCountingStatic().  The max
   // value to which the semaphore can count is 10, and the initial value
   // assigned to the count will be 0.  The address of xSemaphoreBuffer is
   // passed in and will be used to hold the semaphore structure, so no dynamic
   // memory allocation will be used.
```

(下页继续)

(续上页)

```
    xSemaphore = xSemaphoreCreateCounting( 10, 0, &xSemaphoreBuffer );

    // No memory allocation was attempted so xSemaphore cannot be NULL, so there
    // is no need to check its value.
}
```

Return If the counting semaphore was successfully created then a handle to the created counting semaphore is returned. If pxSemaphoreBuffer was NULL then NULL is returned.

Parameters

- `uxMaxCount`: The maximum count value that can be reached. When the semaphore reaches this value it can no longer be ‘given’.
- `uxInitialCount`: The count value assigned to the semaphore when it is created.
- `pxSemaphoreBuffer`: Must point to a variable of type StaticSemaphore_t, which will then be used to hold the semaphore’s data structure, removing the need for the memory to be allocated dynamically.

vSemaphoreDelete(xSemaphore)

Delete a semaphore. This function must be used with care. For example, do not delete a mutex type semaphore if the mutex is held by a task.

Parameters

- `xSemaphore`: A handle to the semaphore to be deleted.

xSemaphoreGetMutexHolder(xSemaphore)

If xMutex is indeed a mutex type semaphore, return the current mutex holder. If xMutex is not a mutex type semaphore, or the mutex is available (not held by a task), return NULL.

Note: This is a good way of determining if the calling task is the mutex holder, but not a good way of determining the identity of the mutex holder as the holder may change between the function exiting and the returned value being tested.

xSemaphoreGetMutexHolderFromISR(xSemaphore)

If xMutex is indeed a mutex type semaphore, return the current mutex holder. If xMutex is not a mutex type semaphore, or the mutex is available (not held by a task), return NULL.

uxSemaphoreGetCount(xSemaphore)

semphr.h

If the semaphore is a counting semaphore then uxSemaphoreGetCount() returns its current count value. If the semaphore is a binary semaphore then uxSemaphoreGetCount() returns 1 if the semaphore is available, and 0 if the semaphore is not available.

Type Definitions

typedef *QueueHandle_t* **SemaphoreHandle_t**

Timer API

Header File

- freertos/include/freertos/timers.h

Functions

TimerHandle_t **xTimerCreate**(**const** char ***const** *pcTimerName*, **const** TickType_t *xTimerPeriodInTicks*, **const** UBaseType_t *uxAutoReload*, void ***const** *pvTimerID*, *TimerCallbackFunction_t pxCallbackFunction*)

Creates a new software timer instance, and returns a handle by which the created software timer can be referenced.

Internally, within the FreeRTOS implementation, software timers use a block of memory, in which the timer data structure is stored. If a software timer is created using xTimerCreate() then the required memory is

automatically dynamically allocated inside the xTimerCreate() function. (see http://www.freertos.org/a00111.html). If a software timer is created using xTimerCreateStatic() then the application writer must provide the memory that will get used by the software timer. xTimerCreateStatic() therefore allows a software timer to be created without using any dynamic memory allocation.

Timers are created in the dormant state. The xTimerStart(), xTimerReset(), xTimerStartFromISR(), xTimerResetFromISR(), xTimerChangePeriod() and xTimerChangePeriodFromISR() API functions can all be used to transition a timer into the active state.

Example usage:

```
#define NUM_TIMERS 5

// An array to hold handles to the created timers.
TimerHandle_t xTimers[ NUM_TIMERS ];

// An array to hold a count of the number of times each timer expires.
int32_t lExpireCounters[ NUM_TIMERS ] = { 0 };

// Define a callback function that will be used by multiple timer instances.
// The callback function does nothing but count the number of times the
// associated timer expires, and stop the timer once the timer has expired
// 10 times.
void vTimerCallback( TimerHandle_t pxTimer )
{
int32_t lArrayIndex;
const int32_t xMaxExpiryCountBeforeStopping = 10;

       // Optionally do something if the pxTimer parameter is NULL.
       configASSERT( pxTimer );

    // Which timer expired?
    lArrayIndex = ( int32_t ) pvTimerGetTimerID( pxTimer );

    // Increment the number of times that pxTimer has expired.
    lExpireCounters[ lArrayIndex ] += 1;

    // If the timer has expired 10 times then stop it from running.
    if( lExpireCounters[ lArrayIndex ] == xMaxExpiryCountBeforeStopping )
    {
        // Do not use a block time if calling a timer API function from a
        // timer callback function, as doing so could cause a deadlock!
        xTimerStop( pxTimer, 0 );
    }
}

void main( void )
{
int32_t x;

    // Create then start some timers.  Starting the timers before the scheduler
    // has been started means the timers will start running immediately that
    // the scheduler starts.
    for( x = 0; x < NUM_TIMERS; x++ )
    {
        xTimers[ x ] = xTimerCreate(    "Timer",       // Just a text name,␣
↪not used by the kernel.
                                        ( 100 * x ),   // The timer period in␣
↪ticks.
                                        pdTRUE,        // The timers will auto-
↪reload themselves when they expire.
                                        ( void * ) x,  // Assign each timer a␣
↪unique id equal to its array index.
```

(下页继续)

(续上页)

```
                                        vTimerCallback // Each timer calls the␣
↪same callback when it expires.
                                    );

        if( xTimers[ x ] == NULL )
        {
            // The timer was not created.
        }
        else
        {
            // Start the timer.  No block time is specified, and even if one␣
↪was
            // it would be ignored because the scheduler has not yet been
            // started.
            if( xTimerStart( xTimers[ x ], 0 ) != pdPASS )
            {
                // The timer could not be set into the Active state.
            }
        }
    }

    // ...
    // Create tasks here.
    // ...

    // Starting the scheduler will start the timers running as they have␣
↪already
    // been set into the active state.
    vTaskStartScheduler();

    // Should not reach here.
    for( ;; );
}
```

Return If the timer is successfully created then a handle to the newly created timer is returned. If the timer cannot be created (because either there is insufficient FreeRTOS heap remaining to allocate the timer structures, or the timer period was set to 0) then NULL is returned.

Parameters

- `pcTimerName`: A text name that is assigned to the timer. This is done purely to assist debugging. The kernel itself only ever references a timer by its handle, and never by its name.
- `xTimerPeriodInTicks`: The timer period. The time is defined in tick periods so the constant portTICK_PERIOD_MS can be used to convert a time that has been specified in milliseconds. For example, if the timer must expire after 100 ticks, then xTimerPeriodInTicks should be set to 100. Alternatively, if the timer must expire after 500ms, then xPeriod can be set to (500 / portTICK_PERIOD_MS) provided configTICK_RATE_HZ is less than or equal to 1000.
- `uxAutoReload`: If uxAutoReload is set to pdTRUE then the timer will expire repeatedly with a frequency set by the xTimerPeriodInTicks parameter. If uxAutoReload is set to pdFALSE then the timer will be a one-shot timer and enter the dormant state after it expires.
- `pvTimerID`: An identifier that is assigned to the timer being created. Typically this would be used in the timer callback function to identify which timer expired when the same callback function is assigned to more than one timer.
- `pxCallbackFunction`: The function to call when the timer expires. Callback functions must have the prototype defined by TimerCallbackFunction_t, which is "void vCallbackFunction(TimerHandle_t xTimer);" .

TimerHandle_t **xTimerCreateStatic**(**const** char ***const** *pcTimerName*, **const** TickType_t *xTimerPeriodInTicks*, **const** UBaseType_t *uxAutoReload*, void ***const** *pvTimerID*, *TimerCallbackFunction_t* *pxCallbackFunction*, StaticTimer_t **pxTimerBuffer*)

Creates a new software timer instance, and returns a handle by which the created software timer can be referenced.

Internally, within the FreeRTOS implementation, software timers use a block of memory, in which the timer data structure is stored. If a software timer is created using xTimerCreate() then the required memory is automatically dynamically allocated inside the xTimerCreate() function. (see http://www.freertos.org/a00111.html). If a software timer is created using xTimerCreateStatic() then the application writer must provide the memory that will get used by the software timer. xTimerCreateStatic() therefore allows a software timer to be created without using any dynamic memory allocation.

Timers are created in the dormant state. The xTimerStart(), xTimerReset(), xTimerStartFromISR(), xTimerResetFromISR(), xTimerChangePeriod() and xTimerChangePeriodFromISR() API functions can all be used to transition a timer into the active state.

Example usage:

```
// The buffer used to hold the software timer's data structure.
static StaticTimer_t xTimerBuffer;

// A variable that will be incremented by the software timer's callback
// function.
UBaseType_t uxVariableToIncrement = 0;

// A software timer callback function that increments a variable passed to
// it when the software timer was created.  After the 5th increment the
// callback function stops the software timer.
static void prvTimerCallback( TimerHandle_t xExpiredTimer )
{
UBaseType_t *puxVariableToIncrement;
BaseType_t xReturned;

    // Obtain the address of the variable to increment from the timer ID.
    puxVariableToIncrement = ( UBaseType_t * ) pvTimerGetTimerID(␣
↪xExpiredTimer );

    // Increment the variable to show the timer callback has executed.
    ( *puxVariableToIncrement )++;

    // If this callback has executed the required number of times, stop the
    // timer.
    if( *puxVariableToIncrement == 5 )
    {
        // This is called from a timer callback so must not block.
        xTimerStop( xExpiredTimer, staticDONT_BLOCK );
    }
}


void main( void )
{
    // Create the software time.  xTimerCreateStatic() has an extra parameter
    // than the normal xTimerCreate() API function.  The parameter is a pointer
    // to the StaticTimer_t structure that will hold the software timer
    // structure.  If the parameter is passed as NULL then the structure will␣
↪be
    // allocated dynamically, just as if xTimerCreate() had been called.
    xTimer = xTimerCreateStatic( "T1",             // Text name for the task. ␣
↪Helps debugging only.  Not used by FreeRTOS.
                                 xTimerPeriod,     // The period of the timer␣
↪in ticks.
                                 pdTRUE,           // This is an auto-reload␣
↪timer.
                                 ( void * ) &uxVariableToIncrement,    // A␣
↪variable incremented by the software timer's callback function
                                 prvTimerCallback, // The function to execute␣
↪when the timer expires.
```

(下页继续)

(续上页)

```
                                    &xTimerBuffer );  // The buffer that will␣
↪hold the software timer structure.

    // The scheduler has not started yet so a block time is not used.
    xReturned = xTimerStart( xTimer, 0 );

    // ...
    // Create tasks here.
    // ...

    // Starting the scheduler will start the timers running as they have␣
↪already
    // been set into the active state.
    vTaskStartScheduler();

    // Should not reach here.
    for( ;; );
}
```

Return If the timer is created then a handle to the created timer is returned. If pxTimerBuffer was NULL then NULL is returned.

Parameters

- `pcTimerName`: A text name that is assigned to the timer. This is done purely to assist debugging. The kernel itself only ever references a timer by its handle, and never by its name.
- `xTimerPeriodInTicks`: The timer period. The time is defined in tick periods so the constant portTICK_PERIOD_MS can be used to convert a time that has been specified in milliseconds. For example, if the timer must expire after 100 ticks, then xTimerPeriodInTicks should be set to 100. Alternatively, if the timer must expire after 500ms, then xPeriod can be set to (500 / portTICK_PERIOD_MS) provided configTICK_RATE_HZ is less than or equal to 1000.
- `uxAutoReload`: If uxAutoReload is set to pdTRUE then the timer will expire repeatedly with a frequency set by the xTimerPeriodInTicks parameter. If uxAutoReload is set to pdFALSE then the timer will be a one-shot timer and enter the dormant state after it expires.
- `pvTimerID`: An identifier that is assigned to the timer being created. Typically this would be used in the timer callback function to identify which timer expired when the same callback function is assigned to more than one timer.
- `pxCallbackFunction`: The function to call when the timer expires. Callback functions must have the prototype defined by TimerCallbackFunction_t, which is "void vCallbackFunction(TimerHandle_t xTimer);" .
- `pxTimerBuffer`: Must point to a variable of type StaticTimer_t, which will be then be used to hold the software timer' s data structures, removing the need for the memory to be allocated dynamically.

void ***pvTimerGetTimerID**(**const** *TimerHandle_t xTimer*)

void *pvTimerGetTimerID(TimerHandle_t xTimer);

Returns the ID assigned to the timer.

IDs are assigned to timers using the pvTimerID parameter of the call to xTimerCreated() that was used to create the timer, and by calling the vTimerSetTimerID() API function.

If the same callback function is assigned to multiple timers then the timer ID can be used as time specific (timer local) storage.

Example usage:

Return The ID assigned to the timer being queried.

Parameters

- `xTimer`: The timer being queried.

See the xTimerCreate() API function example usage scenario.

void **vTimerSetTimerID**(*TimerHandle_t xTimer*, void **pvNewID*)

void vTimerSetTimerID(TimerHandle_t xTimer, void *pvNewID);

Sets the ID assigned to the timer.

IDs are assigned to timers using the pvTimerID parameter of the call to xTimerCreated() that was used to create the timer.

If the same callback function is assigned to multiple timers then the timer ID can be used as time specific (timer local) storage.

Example usage:

Parameters

- `xTimer`: The timer being updated.
- `pvNewID`: The ID to assign to the timer.

See the xTimerCreate() API function example usage scenario.

BaseType_t **xTimerIsTimerActive**(*TimerHandle_t xTimer*)

BaseType_t xTimerIsTimerActive(TimerHandle_t xTimer);

Queries a timer to see if it is active or dormant.

A timer will be dormant if: 1) It has been created but not started, or 2) It is an expired one-shot timer that has not been restarted.

Timers are created in the dormant state. The xTimerStart(), xTimerReset(), xTimerStartFromISR(), xTimerResetFromISR(), xTimerChangePeriod() and xTimerChangePeriodFromISR() API functions can all be used to transition a timer into the active state.

Example usage:

```
// This function assumes xTimer has already been created.
void vAFunction( TimerHandle_t xTimer )
{
    if( xTimerIsTimerActive( xTimer ) != pdFALSE ) // or more simply and␣
↪equivalently "if( xTimerIsTimerActive( xTimer ) )"
    {
        // xTimer is active, do something.
    }
    else
    {
        // xTimer is not active, do something else.
    }
}
```

Return pdFALSE will be returned if the timer is dormant. A value other than pdFALSE will be returned if the timer is active.

Parameters

- `xTimer`: The timer being queried.

TaskHandle_t **xTimerGetTimerDaemonTaskHandle**(void)

xTimerGetTimerDaemonTaskHandle() is only available if INCLUDE_xTimerGetTimerDaemonTaskHandle is set to 1 in FreeRTOSConfig.h.

Simply returns the handle of the timer service/daemon task. It it not valid to call xTimerGetTimerDaemonTaskHandle() before the scheduler has been started.

BaseType_t **xTimerPendFunctionCallFromISR**(*PendedFunction_t xFunctionToPend*, void **pvParameter1*, uint32_t *ulParameter2*, BaseType_t **pxHigherPriorityTaskWoken*)

Used from application interrupt service routines to defer the execution of a function to the RTOS daemon task (the timer service task, hence this function is implemented in timers.c and is prefixed with ‘Timer’).

Ideally an interrupt service routine (ISR) is kept as short as possible, but sometimes an ISR either has a lot of processing to do, or needs to perform processing that is not deterministic. In these cases xTimerPendFunctionCallFromISR() can be used to defer processing of a function to the RTOS daemon task.

A mechanism is provided that allows the interrupt to return directly to the task that will subsequently execute the pended callback function. This allows the callback function to execute contiguously in time with the interrupt - just as if the callback had executed in the interrupt itself.

Example usage:

```
// The callback function that will execute in the context of the daemon task.
// Note callback functions must all use this same prototype.
void vProcessInterface( void *pvParameter1, uint32_t ulParameter2 )
{
   BaseType_t xInterfaceToService;

   // The interface that requires servicing is passed in the second
    // parameter.  The first parameter is not used in this case.
   xInterfaceToService = ( BaseType_t ) ulParameter2;

   // ...Perform the processing here...
}

// An ISR that receives data packets from multiple interfaces
void vAnISR( void )
{
   BaseType_t xInterfaceToService, xHigherPriorityTaskWoken;

   // Query the hardware to determine which interface needs processing.
   xInterfaceToService = prvCheckInterfaces();

    // The actual processing is to be deferred to a task.  Request the
    // vProcessInterface() callback function is executed, passing in the
   // number of the interface that needs processing.  The interface to
   // service is passed in the second parameter.  The first parameter is
   // not used in this case.
   xHigherPriorityTaskWoken = pdFALSE;
   xTimerPendFunctionCallFromISR( vProcessInterface, NULL, ( uint32_t )␣
↪xInterfaceToService, &xHigherPriorityTaskWoken );

   // If xHigherPriorityTaskWoken is now set to pdTRUE then a context
   // switch should be requested.  The macro used is port specific and will
   // be either portYIELD_FROM_ISR() or portEND_SWITCHING_ISR() - refer to
   // the documentation page for the port being used.
   portYIELD_FROM_ISR( xHigherPriorityTaskWoken );

}
```

Return pdPASS is returned if the message was successfully sent to the timer daemon task, otherwise pdFALSE is returned.

Parameters

- `xFunctionToPend`: The function to execute from the timer service/ daemon task. The function must conform to the PendedFunction_t prototype.
- `pvParameter1`: The value of the callback function's first parameter. The parameter has a void * type to allow it to be used to pass any type. For example, unsigned longs can be cast to a void *, or the void * can be used to point to a structure.
- `ulParameter2`: The value of the callback function's second parameter.
- `pxHigherPriorityTaskWoken`: As mentioned above, calling this function will result in a message being sent to the timer daemon task. If the priority of the timer daemon task (which is set using configTIMER_TASK_PRIORITY in FreeRTOSConfig.h) is higher than the priority of the currently running task (the task the interrupt interrupted) then *pxHigherPriorityTaskWoken will be set to pdTRUE within xTimerPendFunctionCallFromISR(), indicating that a context switch should be requested before the interrupt exits. For that reason *pxHigherPriorityTaskWoken must be initialised to pdFALSE. See the example code below.

BaseType_t **xTimerPendFunctionCall**(*PendedFunction_t xFunctionToPend*, void **pvParameter1*, uint32_t *ulParameter2*, TickType_t *xTicksToWait*)

Used to defer the execution of a function to the RTOS daemon task (the timer service task, hence this function is implemented in timers.c and is prefixed with 'Timer').

Return pdPASS is returned if the message was successfully sent to the timer daemon task, otherwise pdFALSE is returned.

Parameters

- `xFunctionToPend`: The function to execute from the timer service/ daemon task. The function must conform to the PendedFunction_t prototype.
- `pvParameter1`: The value of the callback function's first parameter. The parameter has a void * type to allow it to be used to pass any type. For example, unsigned longs can be cast to a void *, or the void * can be used to point to a structure.
- `ulParameter2`: The value of the callback function's second parameter.
- `xTicksToWait`: Calling this function will result in a message being sent to the timer daemon task on a queue. xTicksToWait is the amount of time the calling task should remain in the Blocked state (so not using any processing time) for space to become available on the timer queue if the queue is found to be full.

const char ***pcTimerGetName** (*TimerHandle_t xTimer*)

const char * const pcTimerGetName(TimerHandle_t xTimer);

Returns the name that was assigned to a timer when the timer was created.

Return The name assigned to the timer specified by the xTimer parameter.

Parameters

- `xTimer`: The handle of the timer being queried.

void **vTimerSetReloadMode** (*TimerHandle_t xTimer*, **const** UBaseType_t *uxAutoReload*)

void vTimerSetReloadMode(TimerHandle_t xTimer, const UBaseType_t uxAutoReload);

Updates a timer to be either an autoreload timer, in which case the timer automatically resets itself each time it expires, or a one shot timer, in which case the timer will only expire once unless it is manually restarted.

Parameters

- `xTimer`: The handle of the timer being updated.
- `uxAutoReload`: If uxAutoReload is set to pdTRUE then the timer will expire repeatedly with a frequency set by the timer's period (see the xTimerPeriodInTicks parameter of the xTimerCreate() API function). If uxAutoReload is set to pdFALSE then the timer will be a one-shot timer and enter the dormant state after it expires.

TickType_t **xTimerGetPeriod** (*TimerHandle_t xTimer*)

TickType_t xTimerGetPeriod(TimerHandle_t xTimer);

Returns the period of a timer.

Return The period of the timer in ticks.

Parameters

- `xTimer`: The handle of the timer being queried.

TickType_t **xTimerGetExpiryTime** (*TimerHandle_t xTimer*)

TickType_t xTimerGetExpiryTime(TimerHandle_t xTimer);

Returns the time in ticks at which the timer will expire. If this is less than the current tick count then the expiry time has overflowed from the current time.

Return If the timer is running then the time in ticks at which the timer will next expire is returned. If the timer is not running then the return value is undefined.

Parameters

- `xTimer`: The handle of the timer being queried.

Macros

tmrCOMMAND_EXECUTE_CALLBACK_FROM_ISR

tmrCOMMAND_EXECUTE_CALLBACK

tmrCOMMAND_START_DONT_TRACE

tmrCOMMAND_START

tmrCOMMAND_RESET

tmrCOMMAND_STOP

tmrCOMMAND_CHANGE_PERIOD

tmrCOMMAND_DELETE

tmrFIRST_FROM_ISR_COMMAND

tmrCOMMAND_START_FROM_ISR

tmrCOMMAND_RESET_FROM_ISR

tmrCOMMAND_STOP_FROM_ISR

tmrCOMMAND_CHANGE_PERIOD_FROM_ISR

xTimerStart(xTimer, xTicksToWait)

BaseType_t xTimerStart(TimerHandle_t xTimer, TickType_t xTicksToWait);

Timer functionality is provided by a timer service/daemon task. Many of the public FreeRTOS timer API functions send commands to the timer service task through a queue called the timer command queue. The timer command queue is private to the kernel itself and is not directly accessible to application code. The length of the timer command queue is set by the configTIMER_QUEUE_LENGTH configuration constant.

xTimerStart() starts a timer that was previously created using the xTimerCreate() API function. If the timer had already been started and was already in the active state, then xTimerStart() has equivalent functionality to the xTimerReset() API function.

Starting a timer ensures the timer is in the active state. If the timer is not stopped, deleted, or reset in the mean time, the callback function associated with the timer will get called 'n' ticks after xTimerStart() was called, where 'n' is the timers defined period.

It is valid to call xTimerStart() before the scheduler has been started, but when this is done the timer will not actually start until the scheduler is started, and the timers expiry time will be relative to when the scheduler is started, not relative to when xTimerStart() was called.

The configUSE_TIMERS configuration constant must be set to 1 for xTimerStart() to be available.

Example usage:

Return pdFAIL will be returned if the start command could not be sent to the timer command queue even after xTicksToWait ticks had passed. pdPASS will be returned if the command was successfully sent to the timer command queue. When the command is actually processed will depend on the priority of the timer service/daemon task relative to other tasks in the system, although the timers expiry time is relative to when xTimerStart() is actually called. The timer service/daemon task priority is set by the configTIMER_TASK_PRIORITY configuration constant.

Parameters

- `xTimer`: The handle of the timer being started/restarted.
- `xTicksToWait`: Specifies the time, in ticks, that the calling task should be held in the Blocked state to wait for the start command to be successfully sent to the timer command queue, should the queue already be full when xTimerStart() was called. xTicksToWait is ignored if xTimerStart() is called before the scheduler is started.

See the xTimerCreate() API function example usage scenario.

xTimerStop(xTimer, xTicksToWait)

Timer functionality is provided by a timer service/daemon task. Many of the public FreeRTOS timer API functions send commands to the timer service task through a queue called the timer command queue. The timer command queue is private to the kernel itself and is not directly accessible to application code. The length of the timer command queue is set by the configTIMER_QUEUE_LENGTH configuration constant.

xTimerStop() stops a timer that was previously started using either of the The xTimerStart(), xTimerReset(), xTimerStartFromISR(), xTimerResetFromISR(), xTimerChangePeriod() or xTimerChangePeriodFromISR() API functions.

Stopping a timer ensures the timer is not in the active state.

The configUSE_TIMERS configuration constant must be set to 1 for xTimerStop() to be available.

Example usage:

Return pdFAIL will be returned if the stop command could not be sent to the timer command queue even after xTicksToWait ticks had passed. pdPASS will be returned if the command was successfully sent to the timer command queue. When the command is actually processed will depend on the priority of the timer service/daemon task relative to other tasks in the system. The timer service/daemon task priority is set by the configTIMER_TASK_PRIORITY configuration constant.

Parameters

- `xTimer`: The handle of the timer being stopped.
- `xTicksToWait`: Specifies the time, in ticks, that the calling task should be held in the Blocked state to wait for the stop command to be successfully sent to the timer command queue, should the queue already be full when xTimerStop() was called. xTicksToWait is ignored if xTimerStop() is called before the scheduler is started.

See the xTimerCreate() API function example usage scenario.

xTimerChangePeriod(xTimer, xNewPeriod, xTicksToWait)

Timer functionality is provided by a timer service/daemon task. Many of the public FreeRTOS timer API functions send commands to the timer service task through a queue called the timer command queue. The timer command queue is private to the kernel itself and is not directly accessible to application code. The length of the timer command queue is set by the configTIMER_QUEUE_LENGTH configuration constant.

xTimerChangePeriod() changes the period of a timer that was previously created using the xTimerCreate() API function.

xTimerChangePeriod() can be called to change the period of an active or dormant state timer.

The configUSE_TIMERS configuration constant must be set to 1 for xTimerChangePeriod() to be available.

Example usage:

```
// This function assumes xTimer has already been created.  If the timer
// referenced by xTimer is already active when it is called, then the timer
// is deleted.  If the timer referenced by xTimer is not active when it is
// called, then the period of the timer is set to 500ms and the timer is
// started.
void vAFunction( TimerHandle_t xTimer )
{
    if( xTimerIsTimerActive( xTimer ) != pdFALSE ) // or more simply and␣
↪equivalently "if( xTimerIsTimerActive( xTimer ) )"
    {
        // xTimer is already active - delete it.
        xTimerDelete( xTimer );
    }
    else
    {
        // xTimer is not active, change its period to 500ms.  This will also
        // cause the timer to start.  Block for a maximum of 100 ticks if the
        // change period command cannot immediately be sent to the timer
        // command queue.
        if( xTimerChangePeriod( xTimer, 500 / portTICK_PERIOD_MS, 100 ) ==␣
↪pdPASS )
        {
            // The command was successfully sent.
        }
        else
        {
            // The command could not be sent, even after waiting for 100 ticks
            // to pass.  Take appropriate action here.
        }
```

(下页继续)

(续上页)

```
    }
}
```

Return pdFAIL will be returned if the change period command could not be sent to the timer command queue even after xTicksToWait ticks had passed. pdPASS will be returned if the command was successfully sent to the timer command queue. When the command is actually processed will depend on the priority of the timer service/daemon task relative to other tasks in the system. The timer service/daemon task priority is set by the configTIMER_TASK_PRIORITY configuration constant.

Parameters

- `xTimer`: The handle of the timer that is having its period changed.
- `xNewPeriod`: The new period for xTimer. Timer periods are specified in tick periods, so the constant portTICK_PERIOD_MS can be used to convert a time that has been specified in milliseconds. For example, if the timer must expire after 100 ticks, then xNewPeriod should be set to 100. Alternatively, if the timer must expire after 500ms, then xNewPeriod can be set to (500 / portTICK_PERIOD_MS) provided configTICK_RATE_HZ is less than or equal to 1000.
- `xTicksToWait`: Specifies the time, in ticks, that the calling task should be held in the Blocked state to wait for the change period command to be successfully sent to the timer command queue, should the queue already be full when xTimerChangePeriod() was called. xTicksToWait is ignored if xTimerChangePeriod() is called before the scheduler is started.

`xTimerDelete` (xTimer, xTicksToWait)

Timer functionality is provided by a timer service/daemon task. Many of the public FreeRTOS timer API functions send commands to the timer service task through a queue called the timer command queue. The timer command queue is private to the kernel itself and is not directly accessible to application code. The length of the timer command queue is set by the configTIMER_QUEUE_LENGTH configuration constant.

xTimerDelete() deletes a timer that was previously created using the xTimerCreate() API function.

The configUSE_TIMERS configuration constant must be set to 1 for xTimerDelete() to be available.

Example usage:

Return pdFAIL will be returned if the delete command could not be sent to the timer command queue even after xTicksToWait ticks had passed. pdPASS will be returned if the command was successfully sent to the timer command queue. When the command is actually processed will depend on the priority of the timer service/daemon task relative to other tasks in the system. The timer service/daemon task priority is set by the configTIMER_TASK_PRIORITY configuration constant.

Parameters

- `xTimer`: The handle of the timer being deleted.
- `xTicksToWait`: Specifies the time, in ticks, that the calling task should be held in the Blocked state to wait for the delete command to be successfully sent to the timer command queue, should the queue already be full when xTimerDelete() was called. xTicksToWait is ignored if xTimerDelete() is called before the scheduler is started.

See the xTimerChangePeriod() API function example usage scenario.

`xTimerReset` (xTimer, xTicksToWait)

Timer functionality is provided by a timer service/daemon task. Many of the public FreeRTOS timer API functions send commands to the timer service task through a queue called the timer command queue. The timer command queue is private to the kernel itself and is not directly accessible to application code. The length of the timer command queue is set by the configTIMER_QUEUE_LENGTH configuration constant.

xTimerReset() re-starts a timer that was previously created using the xTimerCreate() API function. If the timer had already been started and was already in the active state, then xTimerReset() will cause the timer to re-evaluate its expiry time so that it is relative to when xTimerReset() was called. If the timer was in the dormant state then xTimerReset() has equivalent functionality to the xTimerStart() API function.

Resetting a timer ensures the timer is in the active state. If the timer is not stopped, deleted, or reset in the mean time, the callback function associated with the timer will get called ‘n’ ticks after xTimerReset() was called, where ‘n’ is the timers defined period.

It is valid to call xTimerReset() before the scheduler has been started, but when this is done the timer will not

actually start until the scheduler is started, and the timers expiry time will be relative to when the scheduler is started, not relative to when xTimerReset() was called.

The configUSE_TIMERS configuration constant must be set to 1 for xTimerReset() to be available.

Example usage:

```
// When a key is pressed, an LCD back-light is switched on.  If 5 seconds pass
// without a key being pressed, then the LCD back-light is switched off.  In
// this case, the timer is a one-shot timer.

TimerHandle_t xBacklightTimer = NULL;

// The callback function assigned to the one-shot timer.  In this case the
// parameter is not used.
void vBacklightTimerCallback( TimerHandle_t pxTimer )
{
    // The timer expired, therefore 5 seconds must have passed since a key
    // was pressed.  Switch off the LCD back-light.
    vSetBacklightState( BACKLIGHT_OFF );
}

// The key press event handler.
void vKeyPressEventHandler( char cKey )
{
    // Ensure the LCD back-light is on, then reset the timer that is
    // responsible for turning the back-light off after 5 seconds of
    // key inactivity.  Wait 10 ticks for the command to be successfully sent
    // if it cannot be sent immediately.
    vSetBacklightState( BACKLIGHT_ON );
    if( xTimerReset( xBacklightTimer, 100 ) != pdPASS )
    {
        // The reset command was not executed successfully.  Take appropriate
        // action here.
    }

    // Perform the rest of the key processing here.
}

void main( void )
{
int32_t x;

    // Create then start the one-shot timer that is responsible for turning
    // the back-light off if no keys are pressed within a 5 second period.
    xBacklightTimer = xTimerCreate( "BacklightTimer",           // Just a text␣
↪name, not used by the kernel.
                                    ( 5000 / portTICK_PERIOD_MS), // The timer␣
↪period in ticks.
                                    pdFALSE,                    // The timer␣
↪is a one-shot timer.
                                    0,                          // The id is␣
↪not used by the callback so can take any value.
                                    vBacklightTimerCallback     // The␣
↪callback function that switches the LCD back-light off.
                                  );

    if( xBacklightTimer == NULL )
    {
        // The timer was not created.
    }
    else
    {
```

(下页继续)

(续上页)

```
        // Start the timer.  No block time is specified, and even if one was
        // it would be ignored because the scheduler has not yet been
        // started.
        if( xTimerStart( xBacklightTimer, 0 ) != pdPASS )
        {
            // The timer could not be set into the Active state.
        }
    }

    // ...
    // Create tasks here.
    // ...

    // Starting the scheduler will start the timer running as it has already
    // been set into the active state.
    vTaskStartScheduler();

    // Should not reach here.
    for( ;; );
}
```

Return pdFAIL will be returned if the reset command could not be sent to the timer command queue even after xTicksToWait ticks had passed. pdPASS will be returned if the command was successfully sent to the timer command queue. When the command is actually processed will depend on the priority of the timer service/daemon task relative to other tasks in the system, although the timers expiry time is relative to when xTimerStart() is actually called. The timer service/daemon task priority is set by the configTIMER_TASK_PRIORITY configuration constant.

Parameters

- `xTimer`: The handle of the timer being reset/started/restarted.
- `xTicksToWait`: Specifies the time, in ticks, that the calling task should be held in the Blocked state to wait for the reset command to be successfully sent to the timer command queue, should the queue already be full when xTimerReset() was called. xTicksToWait is ignored if xTimerReset() is called before the scheduler is started.

`xTimerStartFromISR`(xTimer, pxHigherPriorityTaskWoken)

A version of xTimerStart() that can be called from an interrupt service routine.

Example usage:

```
// This scenario assumes xBacklightTimer has already been created.  When a
// key is pressed, an LCD back-light is switched on.  If 5 seconds pass
// without a key being pressed, then the LCD back-light is switched off.  In
// this case, the timer is a one-shot timer, and unlike the example given for
// the xTimerReset() function, the key press event handler is an interrupt
// service routine.

// The callback function assigned to the one-shot timer.  In this case the
// parameter is not used.
void vBacklightTimerCallback( TimerHandle_t pxTimer )
{
    // The timer expired, therefore 5 seconds must have passed since a key
    // was pressed.  Switch off the LCD back-light.
    vSetBacklightState( BACKLIGHT_OFF );
}

// The key press interrupt service routine.
void vKeyPressEventInterruptHandler( void )
{
BaseType_t xHigherPriorityTaskWoken = pdFALSE;

    // Ensure the LCD back-light is on, then restart the timer that is
```

(下页继续)

(续上页)

```
    // responsible for turning the back-light off after 5 seconds of
    // key inactivity.  This is an interrupt service routine so can only
    // call FreeRTOS API functions that end in "FromISR".
    vSetBacklightState( BACKLIGHT_ON );

    // xTimerStartFromISR() or xTimerResetFromISR() could be called here
    // as both cause the timer to re-calculate its expiry time.
    // xHigherPriorityTaskWoken was initialised to pdFALSE when it was
    // declared (in this function).
    if( xTimerStartFromISR( xBacklightTimer, &xHigherPriorityTaskWoken ) !=␣
↪pdPASS )
    {
        // The start command was not executed successfully.  Take appropriate
        // action here.
    }

    // Perform the rest of the key processing here.

    // If xHigherPriorityTaskWoken equals pdTRUE, then a context switch
    // should be performed.  The syntax required to perform a context switch
    // from inside an ISR varies from port to port, and from compiler to
    // compiler.  Inspect the demos for the port you are using to find the
    // actual syntax required.
    if( xHigherPriorityTaskWoken != pdFALSE )
    {
        // Call the interrupt safe yield function here (actual function
        // depends on the FreeRTOS port being used).
    }
}
```

Return pdFAIL will be returned if the start command could not be sent to the timer command queue. pdPASS will be returned if the command was successfully sent to the timer command queue. When the command is actually processed will depend on the priority of the timer service/daemon task relative to other tasks in the system, although the timers expiry time is relative to when xTimerStartFromISR() is actually called. The timer service/daemon task priority is set by the configTIMER_TASK_PRIORITY configuration constant.

Parameters

- `xTimer`: The handle of the timer being started/restarted.
- `pxHigherPriorityTaskWoken`: The timer service/daemon task spends most of its time in the Blocked state, waiting for messages to arrive on the timer command queue. Calling xTimerStartFromISR() writes a message to the timer command queue, so has the potential to transition the timer service/daemon task out of the Blocked state. If calling xTimerStartFromISR() causes the timer service/daemon task to leave the Blocked state, and the timer service/ daemon task has a priority equal to or greater than the currently executing task (the task that was interrupted), then *pxHigherPriorityTaskWoken will get set to pdTRUE internally within the xTimerStartFromISR() function. If xTimerStartFromISR() sets this value to pdTRUE then a context switch should be performed before the interrupt exits.

`xTimerStopFromISR`(xTimer, pxHigherPriorityTaskWoken)

A version of xTimerStop() that can be called from an interrupt service routine.

Example usage:

```
// This scenario assumes xTimer has already been created and started.  When
// an interrupt occurs, the timer should be simply stopped.

// The interrupt service routine that stops the timer.
void vAnExampleInterruptServiceRoutine( void )
{
BaseType_t xHigherPriorityTaskWoken = pdFALSE;
```

(下页继续)

(续上页)

```
    // The interrupt has occurred - simply stop the timer.
    // xHigherPriorityTaskWoken was set to pdFALSE where it was defined
    // (within this function).  As this is an interrupt service routine, only
    // FreeRTOS API functions that end in "FromISR" can be used.
    if( xTimerStopFromISR( xTimer, &xHigherPriorityTaskWoken ) != pdPASS )
    {
        // The stop command was not executed successfully.  Take appropriate
        // action here.
    }

    // If xHigherPriorityTaskWoken equals pdTRUE, then a context switch
    // should be performed.  The syntax required to perform a context switch
    // from inside an ISR varies from port to port, and from compiler to
    // compiler.  Inspect the demos for the port you are using to find the
    // actual syntax required.
    if( xHigherPriorityTaskWoken != pdFALSE )
    {
        // Call the interrupt safe yield function here (actual function
        // depends on the FreeRTOS port being used).
    }
}
```

Return pdFAIL will be returned if the stop command could not be sent to the timer command queue. pdPASS will be returned if the command was successfully sent to the timer command queue. When the command is actually processed will depend on the priority of the timer service/daemon task relative to other tasks in the system. The timer service/daemon task priority is set by the configTIMER_TASK_PRIORITY configuration constant.

Parameters

- `xTimer`: The handle of the timer being stopped.
- `pxHigherPriorityTaskWoken`: The timer service/daemon task spends most of its time in the Blocked state, waiting for messages to arrive on the timer command queue. Calling xTimerStopFromISR() writes a message to the timer command queue, so has the potential to transition the timer service/daemon task out of the Blocked state. If calling xTimerStopFromISR() causes the timer service/daemon task to leave the Blocked state, and the timer service/ daemon task has a priority equal to or greater than the currently executing task (the task that was interrupted), then *pxHigherPriorityTaskWoken will get set to pdTRUE internally within the xTimerStopFromISR() function. If xTimerStopFromISR() sets this value to pdTRUE then a context switch should be performed before the interrupt exits.

xTimerChangePeriodFromISR(xTimer, xNewPeriod, pxHigherPriorityTaskWoken)

A version of xTimerChangePeriod() that can be called from an interrupt service routine.

Example usage:

```
// This scenario assumes xTimer has already been created and started.  When
// an interrupt occurs, the period of xTimer should be changed to 500ms.

// The interrupt service routine that changes the period of xTimer.
void vAnExampleInterruptServiceRoutine( void )
{
BaseType_t xHigherPriorityTaskWoken = pdFALSE;

    // The interrupt has occurred - change the period of xTimer to 500ms.
    // xHigherPriorityTaskWoken was set to pdFALSE where it was defined
    // (within this function).  As this is an interrupt service routine, only
    // FreeRTOS API functions that end in "FromISR" can be used.
    if( xTimerChangePeriodFromISR( xTimer, &xHigherPriorityTaskWoken ) !=␣
↪pdPASS )
    {
```

(下页继续)

(续上页)

```
        // The command to change the timers period was not executed
        // successfully.  Take appropriate action here.
    }

    // If xHigherPriorityTaskWoken equals pdTRUE, then a context switch
    // should be performed.  The syntax required to perform a context switch
    // from inside an ISR varies from port to port, and from compiler to
    // compiler.  Inspect the demos for the port you are using to find the
    // actual syntax required.
    if( xHigherPriorityTaskWoken != pdFALSE )
    {
        // Call the interrupt safe yield function here (actual function
        // depends on the FreeRTOS port being used).
    }
}
```

Return pdFAIL will be returned if the command to change the timers period could not be sent to the timer command queue. pdPASS will be returned if the command was successfully sent to the timer command queue. When the command is actually processed will depend on the priority of the timer service/daemon task relative to other tasks in the system. The timer service/daemon task priority is set by the configTIMER_TASK_PRIORITY configuration constant.

Parameters

- `xTimer`: The handle of the timer that is having its period changed.
- `xNewPeriod`: The new period for xTimer. Timer periods are specified in tick periods, so the constant portTICK_PERIOD_MS can be used to convert a time that has been specified in milliseconds. For example, if the timer must expire after 100 ticks, then xNewPeriod should be set to 100. Alternatively, if the timer must expire after 500ms, then xNewPeriod can be set to (500 / portTICK_PERIOD_MS) provided configTICK_RATE_HZ is less than or equal to 1000.
- `pxHigherPriorityTaskWoken`: The timer service/daemon task spends most of its time in the Blocked state, waiting for messages to arrive on the timer command queue. Calling xTimerChangePeriodFromISR() writes a message to the timer command queue, so has the potential to transition the timer service/ daemon task out of the Blocked state. If calling xTimerChangePeriodFromISR() causes the timer service/daemon task to leave the Blocked state, and the timer service/daemon task has a priority equal to or greater than the currently executing task (the task that was interrupted), then *pxHigherPriorityTaskWoken will get set to pdTRUE internally within the xTimerChangePeriodFromISR() function. If xTimerChangePeriodFromISR() sets this value to pdTRUE then a context switch should be performed before the interrupt exits.

xTimerResetFromISR(xTimer, pxHigherPriorityTaskWoken)

A version of xTimerReset() that can be called from an interrupt service routine.

Example usage:

```
// This scenario assumes xBacklightTimer has already been created.  When a
// key is pressed, an LCD back-light is switched on.  If 5 seconds pass
// without a key being pressed, then the LCD back-light is switched off.  In
// this case, the timer is a one-shot timer, and unlike the example given for
// the xTimerReset() function, the key press event handler is an interrupt
// service routine.

// The callback function assigned to the one-shot timer.  In this case the
// parameter is not used.
void vBacklightTimerCallback( TimerHandle_t pxTimer )
{
    // The timer expired, therefore 5 seconds must have passed since a key
    // was pressed.  Switch off the LCD back-light.
    vSetBacklightState( BACKLIGHT_OFF );
}

// The key press interrupt service routine.
```

(下页继续)

(续上页)

```
void vKeyPressEventInterruptHandler( void )
{
BaseType_t xHigherPriorityTaskWoken = pdFALSE;

    // Ensure the LCD back-light is on, then reset the timer that is
    // responsible for turning the back-light off after 5 seconds of
    // key inactivity.  This is an interrupt service routine so can only
    // call FreeRTOS API functions that end in "FromISR".
    vSetBacklightState( BACKLIGHT_ON );

    // xTimerStartFromISR() or xTimerResetFromISR() could be called here
    // as both cause the timer to re-calculate its expiry time.
    // xHigherPriorityTaskWoken was initialised to pdFALSE when it was
    // declared (in this function).
    if( xTimerResetFromISR( xBacklightTimer, &xHigherPriorityTaskWoken ) !=␣
↪pdPASS )
    {
        // The reset command was not executed successfully.  Take appropriate
        // action here.
    }

    // Perform the rest of the key processing here.

    // If xHigherPriorityTaskWoken equals pdTRUE, then a context switch
    // should be performed.  The syntax required to perform a context switch
    // from inside an ISR varies from port to port, and from compiler to
    // compiler.  Inspect the demos for the port you are using to find the
    // actual syntax required.
    if( xHigherPriorityTaskWoken != pdFALSE )
    {
        // Call the interrupt safe yield function here (actual function
        // depends on the FreeRTOS port being used).
    }
}
```

Return pdFAIL will be returned if the reset command could not be sent to the timer command queue. pdPASS will be returned if the command was successfully sent to the timer command queue. When the command is actually processed will depend on the priority of the timer service/daemon task relative to other tasks in the system, although the timers expiry time is relative to when xTimerResetFromISR() is actually called. The timer service/daemon task priority is set by the configTIMER_TASK_PRIORITY configuration constant.

Parameters

- `xTimer`: The handle of the timer that is to be started, reset, or restarted.
- `pxHigherPriorityTaskWoken`: The timer service/daemon task spends most of its time in the Blocked state, waiting for messages to arrive on the timer command queue. Calling xTimerResetFromISR() writes a message to the timer command queue, so has the potential to transition the timer service/daemon task out of the Blocked state. If calling xTimerResetFromISR() causes the timer service/daemon task to leave the Blocked state, and the timer service/ daemon task has a priority equal to or greater than the currently executing task (the task that was interrupted), then *pxHigherPriorityTaskWoken will get set to pdTRUE internally within the xTimerResetFromISR() function. If xTimerResetFromISR() sets this value to pdTRUE then a context switch should be performed before the interrupt exits.

Type Definitions

typedef void ***TimerHandle_t**

typedef void (***TimerCallbackFunction_t**)(*TimerHandle_t* xTimer)

typedef void (***PendedFunction_t**)(void *, uint32_t)

Event Group API

Header File

- freertos/include/freertos/event_groups.h

Functions

EventGroupHandle_t **xEventGroupCreate**(void)

Create a new event group.

Internally, within the FreeRTOS implementation, event groups use a [small] block of memory, in which the event group's structure is stored. If an event groups is created using xEventGropuCreate() then the required memory is automatically dynamically allocated inside the xEventGroupCreate() function. (see http://www.freertos.org/a00111.html). If an event group is created using xEventGropuCreateStatic() then the application writer must instead provide the memory that will get used by the event group. xEventGroupCreateStatic() therefore allows an event group to be created without using any dynamic memory allocation.

Although event groups are not related to ticks, for internal implementation reasons the number of bits available for use in an event group is dependent on the configUSE_16_BIT_TICKS setting in FreeRTOSConfig.h. If configUSE_16_BIT_TICKS is 1 then each event group contains 8 usable bits (bit 0 to bit 7). If configUSE_16_BIT_TICKS is set to 0 then each event group has 24 usable bits (bit 0 to bit 23). The EventBits_t type is used to store event bits within an event group.

Example usage:

```
// Declare a variable to hold the created event group.
EventGroupHandle_t xCreatedEventGroup;

// Attempt to create the event group.
xCreatedEventGroup = xEventGroupCreate();

// Was the event group created successfully?
if( xCreatedEventGroup == NULL )
{
    // The event group was not created because there was insufficient
    // FreeRTOS heap available.
}
else
{
    // The event group was created.
}
```

Return If the event group was created then a handle to the event group is returned. If there was insufficient FreeRTOS heap available to create the event group then NULL is returned. See http://www.freertos.org/a00111.html

EventGroupHandle_t **xEventGroupCreateStatic**(StaticEventGroup_t **pxEventGroupBuffer*)

Create a new event group.

Internally, within the FreeRTOS implementation, event groups use a [small] block of memory, in which the event group's structure is stored. If an event groups is created using xEventGropuCreate() then the required memory is automatically dynamically allocated inside the xEventGroupCreate() function. (see http://www.freertos.org/a00111.html). If an event group is created using xEventGropuCreateStatic() then the application writer must instead provide the memory that will get used by the event group. xEventGroupCreateStatic() therefore allows an event group to be created without using any dynamic memory allocation.

Although event groups are not related to ticks, for internal implementation reasons the number of bits available for use in an event group is dependent on the configUSE_16_BIT_TICKS setting in FreeRTOSConfig.h. If configUSE_16_BIT_TICKS is 1 then each event group contains 8 usable bits (bit 0 to bit 7). If configUSE_16_BIT_TICKS is set to 0 then each event group has 24 usable bits (bit 0 to bit 23). The EventBits_t type is used to store event bits within an event group.

Example usage:

```
// StaticEventGroup_t is a publicly accessible structure that has the same
// size and alignment requirements as the real event group structure.  It is
// provided as a mechanism for applications to know the size of the event
// group (which is dependent on the architecture and configuration file
// settings) without breaking the strict data hiding policy by exposing the
// real event group internals.  This StaticEventGroup_t variable is passed
// into the xSemaphoreCreateEventGroupStatic() function and is used to store
// the event group's data structures
StaticEventGroup_t xEventGroupBuffer;

// Create the event group without dynamically allocating any memory.
xEventGroup = xEventGroupCreateStatic( &xEventGroupBuffer );
```

Return If the event group was created then a handle to the event group is returned. If pxEventGroupBuffer was NULL then NULL is returned.

Parameters

- `pxEventGroupBuffer`: pxEventGroupBuffer must point to a variable of type StaticEventGroup_t, which will be then be used to hold the event group's data structures, removing the need for the memory to be allocated dynamically.

EventBits_t **xEventGroupWaitBits**(*EventGroupHandle_t* *xEventGroup*, **const** *EventBits_t* *uxBitsToWaitFor*, **const** BaseType_t *xClearOnExit*, **const** BaseType_t *xWaitForAllBits*, TickType_t *xTicksToWait*)

[Potentially] block to wait for one or more bits to be set within a previously created event group.

This function cannot be called from an interrupt.

Example usage:

```
#define BIT_0    ( 1 << 0 )
#define BIT_4    ( 1 << 4 )

void aFunction( EventGroupHandle_t xEventGroup )
{
EventBits_t uxBits;
const TickType_t xTicksToWait = 100 / portTICK_PERIOD_MS;

    // Wait a maximum of 100ms for either bit 0 or bit 4 to be set within
    // the event group.  Clear the bits before exiting.
    uxBits = xEventGroupWaitBits(
                xEventGroup,    // The event group being tested.
                BIT_0 | BIT_4,  // The bits within the event group to wait␣
↪for.
                pdTRUE,         // BIT_0 and BIT_4 should be cleared before␣
↪returning.
                pdFALSE,        // Don't wait for both bits, either bit will␣
↪do.
                xTicksToWait ); // Wait a maximum of 100ms for either bit to␣
↪be set.

    if( ( uxBits & ( BIT_0 | BIT_4 ) ) == ( BIT_0 | BIT_4 ) )
    {
        // xEventGroupWaitBits() returned because both bits were set.
    }
    else if( ( uxBits & BIT_0 ) != 0 )
    {
        // xEventGroupWaitBits() returned because just BIT_0 was set.
    }
    else if( ( uxBits & BIT_4 ) != 0 )
    {
        // xEventGroupWaitBits() returned because just BIT_4 was set.
    }
```

(下页继续)

(续上页)

```
    else
    {
        // xEventGroupWaitBits() returned because xTicksToWait ticks passed
        // without either BIT_0 or BIT_4 becoming set.
    }
}
```

{c}

Return The value of the event group at the time either the bits being waited for became set, or the block time expired. Test the return value to know which bits were set. If xEventGroupWaitBits() returned because its timeout expired then not all the bits being waited for will be set. If xEventGroupWaitBits() returned because the bits it was waiting for were set then the returned value is the event group value before any bits were automatically cleared in the case that xClearOnExit parameter was set to pdTRUE.

Parameters

- `xEventGroup`: The event group in which the bits are being tested. The event group must have previously been created using a call to xEventGroupCreate().
- `uxBitsToWaitFor`: A bitwise value that indicates the bit or bits to test inside the event group. For example, to wait for bit 0 and/or bit 2 set uxBitsToWaitFor to 0x05. To wait for bits 0 and/or bit 1 and/or bit 2 set uxBitsToWaitFor to 0x07. Etc.
- `xClearOnExit`: If xClearOnExit is set to pdTRUE then any bits within uxBitsToWaitFor that are set within the event group will be cleared before xEventGroupWaitBits() returns if the wait condition was met (if the function returns for a reason other than a timeout). If xClearOnExit is set to pdFALSE then the bits set in the event group are not altered when the call to xEventGroupWaitBits() returns.
- `xWaitForAllBits`: If xWaitForAllBits is set to pdTRUE then xEventGroupWaitBits() will return when either all the bits in uxBitsToWaitFor are set or the specified block time expires. If xWaitForAllBits is set to pdFALSE then xEventGroupWaitBits() will return when any one of the bits set in uxBitsToWaitFor is set or the specified block time expires. The block time is specified by the xTicksToWait parameter.
- `xTicksToWait`: The maximum amount of time (specified in 'ticks') to wait for one/all (depending on the xWaitForAllBits value) of the bits specified by uxBitsToWaitFor to become set.

EventBits_t **xEventGroupClearBits** (*EventGroupHandle_t xEventGroup*, **const** *EventBits_t uxBitsToClear*)

Clear bits within an event group. This function cannot be called from an interrupt.

Example usage:

```
#define BIT_0    ( 1 << 0 )
#define BIT_4    ( 1 << 4 )

void aFunction( EventGroupHandle_t xEventGroup )
{
EventBits_t uxBits;

    // Clear bit 0 and bit 4 in xEventGroup.
    uxBits = xEventGroupClearBits(
                            xEventGroup,    // The event group being updated.
                            BIT_0 | BIT_4 );// The bits being cleared.

    if( ( uxBits & ( BIT_0 | BIT_4 ) ) == ( BIT_0 | BIT_4 ) )
    {
        // Both bit 0 and bit 4 were set before xEventGroupClearBits() was
        // called.  Both will now be clear (not set).
    }
    else if( ( uxBits & BIT_0 ) != 0 )
    {
        // Bit 0 was set before xEventGroupClearBits() was called.  It will
        // now be clear.
```

(下页继续)

(续上页)

```
    }
    else if( ( uxBits & BIT_4 ) != 0 )
    {
        // Bit 4 was set before xEventGroupClearBits() was called.  It will
        // now be clear.
    }
    else
    {
        // Neither bit 0 nor bit 4 were set in the first place.
    }
}
```

Return The value of the event group before the specified bits were cleared.

Parameters

- `xEventGroup`: The event group in which the bits are to be cleared.
- `uxBitsToClear`: A bitwise value that indicates the bit or bits to clear in the event group. For example, to clear bit 3 only, set uxBitsToClear to 0x08. To clear bit 3 and bit 0 set uxBitsToClear to 0x09.

EventBits_t **xEventGroupSetBits** (*EventGroupHandle_t xEventGroup*, **const** *EventBits_t uxBitsToSet*)

Set bits within an event group. This function cannot be called from an interrupt. xEventGroupSetBitsFromISR() is a version that can be called from an interrupt.

Setting bits in an event group will automatically unblock tasks that are blocked waiting for the bits.

Example usage:

```
#define BIT_0    ( 1 << 0 )
#define BIT_4    ( 1 << 4 )

void aFunction( EventGroupHandle_t xEventGroup )
{
EventBits_t uxBits;

    // Set bit 0 and bit 4 in xEventGroup.
    uxBits = xEventGroupSetBits(
                        xEventGroup,    // The event group being updated.
                        BIT_0 | BIT_4 );// The bits being set.

    if( ( uxBits & ( BIT_0 | BIT_4 ) ) == ( BIT_0 | BIT_4 ) )
    {
        // Both bit 0 and bit 4 remained set when the function returned.
    }
    else if( ( uxBits & BIT_0 ) != 0 )
    {
        // Bit 0 remained set when the function returned, but bit 4 was
        // cleared.  It might be that bit 4 was cleared automatically as a
        // task that was waiting for bit 4 was removed from the Blocked
        // state.
    }
    else if( ( uxBits & BIT_4 ) != 0 )
    {
        // Bit 4 remained set when the function returned, but bit 0 was
        // cleared.  It might be that bit 0 was cleared automatically as a
        // task that was waiting for bit 0 was removed from the Blocked
        // state.
    }
    else
    {
        // Neither bit 0 nor bit 4 remained set.  It might be that a task
        // was waiting for both of the bits to be set, and the bits were
```

(下页继续)

(续上页)

```
            // cleared as the task left the Blocked state.
        }
}
```

{c}

Return The value of the event group at the time the call to xEventGroupSetBits() returns. There are two reasons why the returned value might have the bits specified by the uxBitsToSet parameter cleared. First, if setting a bit results in a task that was waiting for the bit leaving the blocked state then it is possible the bit will be cleared automatically (see the xClearBitOnExit parameter of xEventGroupWaitBits()). Second, any unblocked (or otherwise Ready state) task that has a priority above that of the task that called xEventGroupSetBits() will execute and may change the event group value before the call to xEventGroupSetBits() returns.

Parameters

- `xEventGroup`: The event group in which the bits are to be set.
- `uxBitsToSet`: A bitwise value that indicates the bit or bits to set. For example, to set bit 3 only, set uxBitsToSet to 0x08. To set bit 3 and bit 0 set uxBitsToSet to 0x09.

EventBits_t **xEventGroupSync**(*EventGroupHandle_t* *xEventGroup*, **const** *EventBits_t* *uxBitsToSet*, **const** *EventBits_t* *uxBitsToWaitFor*, TickType_t *xTicksToWait*)

Atomically set bits within an event group, then wait for a combination of bits to be set within the same event group. This functionality is typically used to synchronise multiple tasks, where each task has to wait for the other tasks to reach a synchronisation point before proceeding.

This function cannot be used from an interrupt.

The function will return before its block time expires if the bits specified by the uxBitsToWait parameter are set, or become set within that time. In this case all the bits specified by uxBitsToWait will be automatically cleared before the function returns.

Example usage:

```
// Bits used by the three tasks.
#define TASK_0_BIT     ( 1 << 0 )
#define TASK_1_BIT     ( 1 << 1 )
#define TASK_2_BIT     ( 1 << 2 )

#define ALL_SYNC_BITS ( TASK_0_BIT | TASK_1_BIT | TASK_2_BIT )

// Use an event group to synchronise three tasks.  It is assumed this event
// group has already been created elsewhere.
EventGroupHandle_t xEventBits;

void vTask0( void *pvParameters )
{
EventBits_t uxReturn;
TickType_t xTicksToWait = 100 / portTICK_PERIOD_MS;

    for( ;; )
    {
        // Perform task functionality here.

        // Set bit 0 in the event flag to note this task has reached the
        // sync point.  The other two tasks will set the other two bits defined
        // by ALL_SYNC_BITS.  All three tasks have reached the synchronisation
        // point when all the ALL_SYNC_BITS are set.  Wait a maximum of 100ms
        // for this to happen.
        uxReturn = xEventGroupSync( xEventBits, TASK_0_BIT, ALL_SYNC_BITS,␣
↪xTicksToWait );

        if( ( uxReturn & ALL_SYNC_BITS ) == ALL_SYNC_BITS )
        {
```

(下页继续)

(续上页)

```
            // All three tasks reached the synchronisation point before the call
            // to xEventGroupSync() timed out.
        }
     }
}

void vTask1( void *pvParameters )
{
    for( ;; )
    {
       // Perform task functionality here.

       // Set bit 1 in the event flag to note this task has reached the
       // synchronisation point.  The other two tasks will set the other two
       // bits defined by ALL_SYNC_BITS.  All three tasks have reached the
       // synchronisation point when all the ALL_SYNC_BITS are set.  Wait
       // indefinitely for this to happen.
       xEventGroupSync( xEventBits, TASK_1_BIT, ALL_SYNC_BITS, portMAX_DELAY );

       // xEventGroupSync() was called with an indefinite block time, so
       // this task will only reach here if the syncrhonisation was made by all
       // three tasks, so there is no need to test the return value.
    }
}

void vTask2( void *pvParameters )
{
    for( ;; )
    {
       // Perform task functionality here.

       // Set bit 2 in the event flag to note this task has reached the
       // synchronisation point.  The other two tasks will set the other two
       // bits defined by ALL_SYNC_BITS.  All three tasks have reached the
       // synchronisation point when all the ALL_SYNC_BITS are set.  Wait
       // indefinitely for this to happen.
       xEventGroupSync( xEventBits, TASK_2_BIT, ALL_SYNC_BITS, portMAX_DELAY );

       // xEventGroupSync() was called with an indefinite block time, so
       // this task will only reach here if the syncrhonisation was made by all
       // three tasks, so there is no need to test the return value.
       }
}
```

Return The value of the event group at the time either the bits being waited for became set, or the block time expired. Test the return value to know which bits were set. If xEventGroupSync() returned because its timeout expired then not all the bits being waited for will be set. If xEventGroupSync() returned because all the bits it was waiting for were set then the returned value is the event group value before any bits were automatically cleared.

Parameters

- `xEventGroup`: The event group in which the bits are being tested. The event group must have previously been created using a call to xEventGroupCreate().
- `uxBitsToSet`: The bits to set in the event group before determining if, and possibly waiting for, all the bits specified by the uxBitsToWait parameter are set.
- `uxBitsToWaitFor`: A bitwise value that indicates the bit or bits to test inside the event group. For example, to wait for bit 0 and bit 2 set uxBitsToWaitFor to 0x05. To wait for bits 0 and bit 1 and bit 2 set uxBitsToWaitFor to 0x07. Etc.
- `xTicksToWait`: The maximum amount of time (specified in 'ticks') to wait for all of the bits specified by uxBitsToWaitFor to become set.

EventBits_t **xEventGroupGetBitsFromISR** (*EventGroupHandle_t xEventGroup*)

A version of xEventGroupGetBits() that can be called from an ISR.

Return The event group bits at the time xEventGroupGetBitsFromISR() was called.

Parameters

- `xEventGroup`: The event group being queried.

void **vEventGroupDelete**(*EventGroupHandle_t xEventGroup*)

Delete an event group that was previously created by a call to xEventGroupCreate(). Tasks that are blocked on the event group will be unblocked and obtain 0 as the event group's value.

Parameters

- `xEventGroup`: The event group being deleted.

Macros

xEventGroupClearBitsFromISR(xEventGroup, uxBitsToClear)

A version of xEventGroupClearBits() that can be called from an interrupt.

Setting bits in an event group is not a deterministic operation because there are an unknown number of tasks that may be waiting for the bit or bits being set. FreeRTOS does not allow nondeterministic operations to be performed while interrupts are disabled, so protects event groups that are accessed from tasks by suspending the scheduler rather than disabling interrupts. As a result event groups cannot be accessed directly from an interrupt service routine. Therefore xEventGroupClearBitsFromISR() sends a message to the timer task to have the clear operation performed in the context of the timer task.

Example usage:

```
 #define BIT_0    ( 1 << 0 )
 #define BIT_4    ( 1 << 4 )

 // An event group which it is assumed has already been created by a call to
 // xEventGroupCreate().
 EventGroupHandle_t xEventGroup;

 void anInterruptHandler( void )
 {
      // Clear bit 0 and bit 4 in xEventGroup.
      xResult = xEventGroupClearBitsFromISR(
                          xEventGroup,     // The event group being updated.
                          BIT_0 | BIT_4 ); // The bits being set.

      if( xResult == pdPASS )
      {
          // The message was posted successfully.
      }
 }
```

Return If the request to execute the function was posted successfully then pdPASS is returned, otherwise pdFALSE is returned. pdFALSE will be returned if the timer service queue was full.

Parameters

- `xEventGroup`: The event group in which the bits are to be cleared.
- `uxBitsToClear`: A bitwise value that indicates the bit or bits to clear. For example, to clear bit 3 only, set uxBitsToClear to 0x08. To clear bit 3 and bit 0 set uxBitsToClear to 0x09.

xEventGroupSetBitsFromISR(xEventGroup, uxBitsToSet, pxHigherPriorityTaskWoken)

A version of xEventGroupSetBits() that can be called from an interrupt.

Setting bits in an event group is not a deterministic operation because there are an unknown number of tasks that may be waiting for the bit or bits being set. FreeRTOS does not allow nondeterministic operations to be performed in interrupts or from critical sections. Therefore xEventGroupSetBitsFromISR() sends a message to the timer task to have the set operation performed in the context of the timer task - where a scheduler lock is used in place of a critical section.

Example usage:

```
#define BIT_0    ( 1 << 0 )
#define BIT_4    ( 1 << 4 )

// An event group which it is assumed has already been created by a call to
// xEventGroupCreate().
EventGroupHandle_t xEventGroup;

void anInterruptHandler( void )
{
BaseType_t xHigherPriorityTaskWoken, xResult;

      // xHigherPriorityTaskWoken must be initialised to pdFALSE.
      xHigherPriorityTaskWoken = pdFALSE;

      // Set bit 0 and bit 4 in xEventGroup.
      xResult = xEventGroupSetBitsFromISR(
                          xEventGroup,    // The event group being updated.
                          BIT_0 | BIT_4   // The bits being set.
                          &xHigherPriorityTaskWoken );

      // Was the message posted successfully?
      if( xResult == pdPASS )
      {
          // If xHigherPriorityTaskWoken is now set to pdTRUE then a context
          // switch should be requested.  The macro used is port specific and
          // will be either portYIELD_FROM_ISR() or portEND_SWITCHING_ISR() -
          // refer to the documentation page for the port being used.
          portYIELD_FROM_ISR( xHigherPriorityTaskWoken );
      }
}
```

Return If the request to execute the function was posted successfully then pdPASS is returned, otherwise pdFALSE is returned. pdFALSE will be returned if the timer service queue was full.

Parameters

- `xEventGroup`: The event group in which the bits are to be set.
- `uxBitsToSet`: A bitwise value that indicates the bit or bits to set. For example, to set bit 3 only, set uxBitsToSet to 0x08. To set bit 3 and bit 0 set uxBitsToSet to 0x09.
- `pxHigherPriorityTaskWoken`: As mentioned above, calling this function will result in a message being sent to the timer daemon task. If the priority of the timer daemon task is higher than the priority of the currently running task (the task the interrupt interrupted) then *pxHigherPriorityTaskWoken will be set to pdTRUE by xEventGroupSetBitsFromISR(), indicating that a context switch should be requested before the interrupt exits. For that reason *pxHigherPriorityTaskWoken must be initialised to pdFALSE. See the example code below.

xEventGroupGetBits(xEventGroup)

Returns the current value of the bits in an event group. This function cannot be used from an interrupt.

Return The event group bits at the time xEventGroupGetBits() was called.

Parameters

- `xEventGroup`: The event group being queried.

Type Definitions

typedef void ***EventGroupHandle_t**

typedef TickType_t **EventBits_t**

Stream Buffer API

Header File

- freertos/include/freertos/stream_buffer.h

Functions

size_t **xStreamBufferSend**(*StreamBufferHandle_t xStreamBuffer*, **const** void **pvTxData*, size_t *xDataLengthBytes*, TickType_t *xTicksToWait*)

Sends bytes to a stream buffer. The bytes are copied into the stream buffer.

NOTE: Uniquely among FreeRTOS objects, the stream buffer implementation (so also the message buffer implementation, as message buffers are built on top of stream buffers) assumes there is only one task or interrupt that will write to the buffer (the writer), and only one task or interrupt that will read from the buffer (the reader). It is safe for the writer and reader to be different tasks or interrupts, but, unlike other FreeRTOS objects, it is not safe to have multiple different writers or multiple different readers. If there are to be multiple different writers then the application writer must place each call to a writing API function (such as xStreamBufferSend()) inside a critical section and set the send block time to 0. Likewise, if there are to be multiple different readers then the application writer must place each call to a reading API function (such as xStreamBufferRead()) inside a critical section and set the receive block time to 0.

Use xStreamBufferSend() to write to a stream buffer from a task. Use xStreamBufferSendFromISR() to write to a stream buffer from an interrupt service routine (ISR).

Example use:

```
void vAFunction( StreamBufferHandle_t xStreamBuffer )
{
size_t xBytesSent;
uint8_t ucArrayToSend[] = { 0, 1, 2, 3 };
char *pcStringToSend = "String to send";
const TickType_t x100ms = pdMS_TO_TICKS( 100 );

    // Send an array to the stream buffer, blocking for a maximum of 100ms to
    // wait for enough space to be available in the stream buffer.
    xBytesSent = xStreamBufferSend( xStreamBuffer, ( void * ) ucArrayToSend,␣
↪sizeof( ucArrayToSend ), x100ms );

    if( xBytesSent != sizeof( ucArrayToSend ) )
    {
        // The call to xStreamBufferSend() times out before there was enough
        // space in the buffer for the data to be written, but it did
        // successfully write xBytesSent bytes.
    }

    // Send the string to the stream buffer.  Return immediately if there is␣
↪not
    // enough space in the buffer.
    xBytesSent = xStreamBufferSend( xStreamBuffer, ( void * ) pcStringToSend,␣
↪strlen( pcStringToSend ), 0 );

    if( xBytesSent != strlen( pcStringToSend ) )
    {
        // The entire string could not be added to the stream buffer because
        // there was not enough free space in the buffer, but xBytesSent bytes
        // were sent.  Could try again to send the remaining bytes.
    }
}
```

Return The number of bytes written to the stream buffer. If a task times out before it can write all xDataLengthBytes into the buffer it will still write as many bytes as possible.

Parameters

- `xStreamBuffer`: The handle of the stream buffer to which a stream is being sent.
- `pvTxData`: A pointer to the buffer that holds the bytes to be copied into the stream buffer.
- `xDataLengthBytes`: The maximum number of bytes to copy from pvTxData into the stream buffer.
- `xTicksToWait`: The maximum amount of time the task should remain in the Blocked state to wait for enough space to become available in the stream buffer, should the stream buffer contain too little space to hold the another xDataLengthBytes bytes. The block time is specified in tick periods, so

the absolute time it represents is dependent on the tick frequency. The macro pdMS_TO_TICKS() can be used to convert a time specified in milliseconds into a time specified in ticks. Setting xTicksToWait to portMAX_DELAY will cause the task to wait indefinitely (without timing out), provided INCLUDE_vTaskSuspend is set to 1 in FreeRTOSConfig.h. If a task times out before it can write all xDataLengthBytes into the buffer it will still write as many bytes as possible. A task does not use any CPU time when it is in the blocked state.

size_t **xStreamBufferSendFromISR**(*StreamBufferHandle_t xStreamBuffer*, **const** void **pvTxData*, size_t *xDataLengthBytes*, BaseType_t ***const** *pxHigherPriorityTaskWoken*)

Interrupt safe version of the API function that sends a stream of bytes to the stream buffer.

NOTE: Uniquely among FreeRTOS objects, the stream buffer implementation (so also the message buffer implementation, as message buffers are built on top of stream buffers) assumes there is only one task or interrupt that will write to the buffer (the writer), and only one task or interrupt that will read from the buffer (the reader). It is safe for the writer and reader to be different tasks or interrupts, but, unlike other FreeRTOS objects, it is not safe to have multiple different writers or multiple different readers. If there are to be multiple different writers then the application writer must place each call to a writing API function (such as xStreamBufferSend()) inside a critical section and set the send block time to 0. Likewise, if there are to be multiple different readers then the application writer must place each call to a reading API function (such as xStreamBufferRead()) inside a critical section and set the receive block time to 0.

Use xStreamBufferSend() to write to a stream buffer from a task. Use xStreamBufferSendFromISR() to write to a stream buffer from an interrupt service routine (ISR).

Example use:

```
//A stream buffer that has already been created.
StreamBufferHandle_t xStreamBuffer;

void vAnInterruptServiceRoutine( void )
{
size_t xBytesSent;
char *pcStringToSend = "String to send";
BaseType_t xHigherPriorityTaskWoken = pdFALSE; // Initialised to pdFALSE.

    // Attempt to send the string to the stream buffer.
    xBytesSent = xStreamBufferSendFromISR( xStreamBuffer,
                                           ( void * ) pcStringToSend,
                                           strlen( pcStringToSend ),
                                           &xHigherPriorityTaskWoken );

    if( xBytesSent != strlen( pcStringToSend ) )
    {
        // There was not enough free space in the stream buffer for the entire
        // string to be written, ut xBytesSent bytes were written.
    }

    // If xHigherPriorityTaskWoken was set to pdTRUE inside
    // xStreamBufferSendFromISR() then a task that has a priority above the
    // priority of the currently executing task was unblocked and a context
    // switch should be performed to ensure the ISR returns to the unblocked
    // task.  In most FreeRTOS ports this is done by simply passing
    // xHigherPriorityTaskWoken into taskYIELD_FROM_ISR(), which will test the
    // variables value, and perform the context switch if necessary.  Check the
    // documentation for the port in use for port specific instructions.
    taskYIELD_FROM_ISR( xHigherPriorityTaskWoken );
}
```

Return The number of bytes actually written to the stream buffer, which will be less than xDataLengthBytes if the stream buffer didn't have enough free space for all the bytes to be written.

Parameters

- `xStreamBuffer`: The handle of the stream buffer to which a stream is being sent.
- `pvTxData`: A pointer to the data that is to be copied into the stream buffer.

- `xDataLengthBytes`: The maximum number of bytes to copy from pvTxData into the stream buffer.
- `pxHigherPriorityTaskWoken`: It is possible that a stream buffer will have a task blocked on it waiting for data. Calling xStreamBufferSendFromISR() can make data available, and so cause a task that was waiting for data to leave the Blocked state. If calling xStreamBufferSendFromISR() causes a task to leave the Blocked state, and the unblocked task has a priority higher than the currently executing task (the task that was interrupted), then, internally, xStreamBufferSendFromISR() will set *pxHigherPriorityTaskWoken to pdTRUE. If xStreamBufferSendFromISR() sets this value to pdTRUE, then normally a context switch should be performed before the interrupt is exited. This will ensure that the interrupt returns directly to the highest priority Ready state task. *pxHigherPriorityTaskWoken should be set to pdFALSE before it is passed into the function. See the example code below for an example.

size_t **xStreamBufferReceive**(*StreamBufferHandle_t xStreamBuffer*, void **pvRxData*, size_t *xBufferLengthBytes*, TickType_t *xTicksToWait*)

Receives bytes from a stream buffer.

NOTE: Uniquely among FreeRTOS objects, the stream buffer implementation (so also the message buffer implementation, as message buffers are built on top of stream buffers) assumes there is only one task or interrupt that will write to the buffer (the writer), and only one task or interrupt that will read from the buffer (the reader). It is safe for the writer and reader to be different tasks or interrupts, but, unlike other FreeRTOS objects, it is not safe to have multiple different writers or multiple different readers. If there are to be multiple different writers then the application writer must place each call to a writing API function (such as xStreamBufferSend()) inside a critical section and set the send block time to 0. Likewise, if there are to be multiple different readers then the application writer must place each call to a reading API function (such as xStreamBufferRead()) inside a critical section and set the receive block time to 0.

Use xStreamBufferReceive() to read from a stream buffer from a task. Use xStreamBufferReceiveFromISR() to read from a stream buffer from an interrupt service routine (ISR).

Example use:

```
void vAFunction( StreamBuffer_t xStreamBuffer )
{
uint8_t ucRxData[ 20 ];
size_t xReceivedBytes;
const TickType_t xBlockTime = pdMS_TO_TICKS( 20 );

    // Receive up to another sizeof( ucRxData ) bytes from the stream buffer.
    // Wait in the Blocked state (so not using any CPU processing time) for a
    // maximum of 100ms for the full sizeof( ucRxData ) number of bytes to be
    // available.
    xReceivedBytes = xStreamBufferReceive( xStreamBuffer,
                                           ( void * ) ucRxData,
                                           sizeof( ucRxData ),
                                           xBlockTime );

    if( xReceivedBytes > 0 )
    {
        // A ucRxData contains another xRecievedBytes bytes of data, which can
        // be processed here....
    }
}
```

Return The number of bytes actually read from the stream buffer, which will be less than xBufferLengthBytes if the call to xStreamBufferReceive() timed out before xBufferLengthBytes were available.

Parameters

- `xStreamBuffer`: The handle of the stream buffer from which bytes are to be received.
- `pvRxData`: A pointer to the buffer into which the received bytes will be copied.
- `xBufferLengthBytes`: The length of the buffer pointed to by the pvRxData parameter. This sets the maximum number of bytes to receive in one call. xStreamBufferReceive will return as many bytes as possible up to a maximum set by xBufferLengthBytes.

- `xTicksToWait`: The maximum amount of time the task should remain in the Blocked state to wait for data to become available if the stream buffer is empty. xStreamBufferReceive() will return immediately if xTicksToWait is zero. The block time is specified in tick periods, so the absolute time it represents is dependent on the tick frequency. The macro pdMS_TO_TICKS() can be used to convert a time specified in milliseconds into a time specified in ticks. Setting xTicksToWait to portMAX_DELAY will cause the task to wait indefinitely (without timing out), provided INCLUDE_vTaskSuspend is set to 1 in FreeRTOSConfig.h. A task does not use any CPU time when it is in the Blocked state.

size_t **xStreamBufferReceiveFromISR**(*StreamBufferHandle_t* *xStreamBuffer*, void **pvRxData*, size_t *xBufferLengthBytes*, BaseType_t ***const** *pxHigherPriorityTaskWoken*)

An interrupt safe version of the API function that receives bytes from a stream buffer.

Use xStreamBufferReceive() to read bytes from a stream buffer from a task. Use xStreamBufferReceiveFromISR() to read bytes from a stream buffer from an interrupt service routine (ISR).

Example use:

```
// A stream buffer that has already been created.
StreamBuffer_t xStreamBuffer;

void vAnInterruptServiceRoutine( void )
{
uint8_t ucRxData[ 20 ];
size_t xReceivedBytes;
BaseType_t xHigherPriorityTaskWoken = pdFALSE;  // Initialised to pdFALSE.

    // Receive the next stream from the stream buffer.
    xReceivedBytes = xStreamBufferReceiveFromISR( xStreamBuffer,
                                                  ( void * ) ucRxData,
                                                  sizeof( ucRxData ),
                                                  &xHigherPriorityTaskWoken );

    if( xReceivedBytes > 0 )
    {
        // ucRxData contains xReceivedBytes read from the stream buffer.
        // Process the stream here....
    }

    // If xHigherPriorityTaskWoken was set to pdTRUE inside
    // xStreamBufferReceiveFromISR() then a task that has a priority above the
    // priority of the currently executing task was unblocked and a context
    // switch should be performed to ensure the ISR returns to the unblocked
    // task.  In most FreeRTOS ports this is done by simply passing
    // xHigherPriorityTaskWoken into taskYIELD_FROM_ISR(), which will test the
    // variables value, and perform the context switch if necessary.  Check the
    // documentation for the port in use for port specific instructions.
    taskYIELD_FROM_ISR( xHigherPriorityTaskWoken );
}
```

Return The number of bytes read from the stream buffer, if any.

Parameters

- `xStreamBuffer`: The handle of the stream buffer from which a stream is being received.
- `pvRxData`: A pointer to the buffer into which the received bytes are copied.
- `xBufferLengthBytes`: The length of the buffer pointed to by the pvRxData parameter. This sets the maximum number of bytes to receive in one call. xStreamBufferReceive will return as many bytes as possible up to a maximum set by xBufferLengthBytes.
- `pxHigherPriorityTaskWoken`: It is possible that a stream buffer will have a task blocked on it waiting for space to become available. Calling xStreamBufferReceiveFromISR() can make space available, and so cause a task that is waiting for space to leave the Blocked state. If calling xStreamBufferReceiveFromISR() causes a task to leave the Blocked state, and the unblocked task has a priority higher than the currently executing task (the task that was interrupted), then,

internally, xStreamBufferReceiveFromISR() will set *pxHigherPriorityTaskWoken to pdTRUE. If xStreamBufferReceiveFromISR() sets this value to pdTRUE, then normally a context switch should be performed before the interrupt is exited. That will ensure the interrupt returns directly to the highest priority Ready state task. *pxHigherPriorityTaskWoken should be set to pdFALSE before it is passed into the function. See the code example below for an example.

void **vStreamBufferDelete**(*StreamBufferHandle_t xStreamBuffer*)

Deletes a stream buffer that was previously created using a call to xStreamBufferCreate() or xStreamBufferCreateStatic(). If the stream buffer was created using dynamic memory (that is, by xStreamBufferCreate()), then the allocated memory is freed.

A stream buffer handle must not be used after the stream buffer has been deleted.

Parameters

- `xStreamBuffer`: The handle of the stream buffer to be deleted.

BaseType_t **xStreamBufferIsFull**(*StreamBufferHandle_t xStreamBuffer*)

Queries a stream buffer to see if it is full. A stream buffer is full if it does not have any free space, and therefore cannot accept any more data.

Return If the stream buffer is full then pdTRUE is returned. Otherwise pdFALSE is returned.

Parameters

- `xStreamBuffer`: The handle of the stream buffer being queried.

BaseType_t **xStreamBufferIsEmpty**(*StreamBufferHandle_t xStreamBuffer*)

Queries a stream buffer to see if it is empty. A stream buffer is empty if it does not contain any data.

Return If the stream buffer is empty then pdTRUE is returned. Otherwise pdFALSE is returned.

Parameters

- `xStreamBuffer`: The handle of the stream buffer being queried.

BaseType_t **xStreamBufferReset**(*StreamBufferHandle_t xStreamBuffer*)

Resets a stream buffer to its initial, empty, state. Any data that was in the stream buffer is discarded. A stream buffer can only be reset if there are no tasks blocked waiting to either send to or receive from the stream buffer.

Return If the stream buffer is reset then pdPASS is returned. If there was a task blocked waiting to send to or read from the stream buffer then the stream buffer is not reset and pdFAIL is returned.

Parameters

- `xStreamBuffer`: The handle of the stream buffer being reset.

size_t **xStreamBufferSpacesAvailable**(*StreamBufferHandle_t xStreamBuffer*)

size_t **xStreamBufferBytesAvailable**(*StreamBufferHandle_t xStreamBuffer*)

BaseType_t **xStreamBufferSetTriggerLevel**(*StreamBufferHandle_t xStreamBuffer*, size_t *xTriggerLevel*)

A stream buffer's trigger level is the number of bytes that must be in the stream buffer before a task that is blocked on the stream buffer to wait for data is moved out of the blocked state. For example, if a task is blocked on a read of an empty stream buffer that has a trigger level of 1 then the task will be unblocked when a single byte is written to the buffer or the task's block time expires. As another example, if a task is blocked on a read of an empty stream buffer that has a trigger level of 10 then the task will not be unblocked until the stream buffer contains at least 10 bytes or the task's block time expires. If a reading task's block time expires before the trigger level is reached then the task will still receive however many bytes are actually available. Setting a trigger level of 0 will result in a trigger level of 1 being used. It is not valid to specify a trigger level that is greater than the buffer size.

A trigger level is set when the stream buffer is created, and can be modified using xStreamBufferSetTriggerLevel().

Return If xTriggerLevel was less than or equal to the stream buffer's length then the trigger level will be updated and pdTRUE is returned. Otherwise pdFALSE is returned.

Parameters

- `xStreamBuffer`: The handle of the stream buffer being updated.
- `xTriggerLevel`: The new trigger level for the stream buffer.

BaseType_t **xStreamBufferSendCompletedFromISR**(*StreamBufferHandle_t* *xStreamBuffer*, BaseType_t **pxHigherPriorityTaskWoken*)

For advanced users only.

The sbSEND_COMPLETED() macro is called from within the FreeRTOS APIs when data is sent to a message buffer or stream buffer. If there was a task that was blocked on the message or stream buffer waiting for data to arrive then the sbSEND_COMPLETED() macro sends a notification to the task to remove it from the Blocked state. xStreamBufferSendCompletedFromISR() does the same thing. It is provided to enable application writers to implement their own version of sbSEND_COMPLETED(), and MUST NOT BE USED AT ANY OTHER TIME.

See the example implemented in FreeRTOS/Demo/Minimal/MessageBufferAMP.c for additional information.

Return If a task was removed from the Blocked state then pdTRUE is returned. Otherwise pdFALSE is returned.

Parameters

- `xStreamBuffer`: The handle of the stream buffer to which data was written.
- `pxHigherPriorityTaskWoken`: *pxHigherPriorityTaskWoken should be initialised to pdFALSE before it is passed into xStreamBufferSendCompletedFromISR(). If calling xStreamBufferSendCompletedFromISR() removes a task from the Blocked state, and the task has a priority above the priority of the currently running task, then *pxHigherPriorityTaskWoken will get set to pdTRUE indicating that a context switch should be performed before exiting the ISR.

BaseType_t **xStreamBufferReceiveCompletedFromISR**(*StreamBufferHandle_t* *xStreamBuffer*, BaseType_t **pxHigherPriorityTaskWoken*)

For advanced users only.

The sbRECEIVE_COMPLETED() macro is called from within the FreeRTOS APIs when data is read out of a message buffer or stream buffer. If there was a task that was blocked on the message or stream buffer waiting for data to arrive then the sbRECEIVE_COMPLETED() macro sends a notification to the task to remove it from the Blocked state. xStreamBufferReceiveCompletedFromISR() does the same thing. It is provided to enable application writers to implement their own version of sbRECEIVE_COMPLETED(), and MUST NOT BE USED AT ANY OTHER TIME.

See the example implemented in FreeRTOS/Demo/Minimal/MessageBufferAMP.c for additional information.

Return If a task was removed from the Blocked state then pdTRUE is returned. Otherwise pdFALSE is returned.

Parameters

- `xStreamBuffer`: The handle of the stream buffer from which data was read.
- `pxHigherPriorityTaskWoken`: *pxHigherPriorityTaskWoken should be initialised to pdFALSE before it is passed into xStreamBufferReceiveCompletedFromISR(). If calling xStreamBufferReceiveCompletedFromISR() removes a task from the Blocked state, and the task has a priority above the priority of the currently running task, then *pxHigherPriorityTaskWoken will get set to pdTRUE indicating that a context switch should be performed before exiting the ISR.

Macros

xStreamBufferCreate(xBufferSizeBytes, xTriggerLevelBytes)

Creates a new stream buffer using dynamically allocated memory. See xStreamBufferCreateStatic() for a version that uses statically allocated memory (memory that is allocated at compile time).

configSUPPORT_DYNAMIC_ALLOCATION must be set to 1 or left undefined in FreeRTOSConfig.h for xStreamBufferCreate() to be available.

Example use:

```
void vAFunction( void )
    {
    StreamBufferHandle_t xStreamBuffer;
    const size_t xStreamBufferSizeBytes = 100, xTriggerLevel = 10;
```

(下页继续)

(续上页)

```
        // Create a stream buffer that can hold 100 bytes.  The memory used to␣
↪hold
        // both the stream buffer structure and the data in the stream buffer␣
↪is
        // allocated dynamically.
        xStreamBuffer = xStreamBufferCreate( xStreamBufferSizeBytes,␣
↪xTriggerLevel );

        if( xStreamBuffer == NULL )
        {
            // There was not enough heap memory space available to create the
            // stream buffer.
        }
        else
        {
            // The stream buffer was created successfully and can now be used.
        }
    }
```

Return If NULL is returned, then the stream buffer cannot be created because there is insufficient heap memory available for FreeRTOS to allocate the stream buffer data structures and storage area. A non-NULL value being returned indicates that the stream buffer has been created successfully - the returned value should be stored as the handle to the created stream buffer.

Parameters

- `xBufferSizeBytes`: The total number of bytes the stream buffer will be able to hold at any one time.
- `xTriggerLevelBytes`: The number of bytes that must be in the stream buffer before a task that is blocked on the stream buffer to wait for data is moved out of the blocked state. For example, if a task is blocked on a read of an empty stream buffer that has a trigger level of 1 then the task will be unblocked when a single byte is written to the buffer or the task's block time expires. As another example, if a task is blocked on a read of an empty stream buffer that has a trigger level of 10 then the task will not be unblocked until the stream buffer contains at least 10 bytes or the task's block time expires. If a reading task's block time expires before the trigger level is reached then the task will still receive however many bytes are actually available. Setting a trigger level of 0 will result in a trigger level of 1 being used. It is not valid to specify a trigger level that is greater than the buffer size.

xStreamBufferCreateStatic(xBufferSizeBytes, xTriggerLevelBytes, pucStreamBufferStorageArea, pxStaticStreamBuffer)

Creates a new stream buffer using statically allocated memory. See xStreamBufferCreate() for a version that uses dynamically allocated memory.

configSUPPORT_STATIC_ALLOCATION must be set to 1 in FreeRTOSConfig.h for xStreamBufferCreateStatic() to be available.

Example use:

```
// Used to dimension the array used to hold the streams.  The available space
// will actually be one less than this, so 999.
#define STORAGE_SIZE_BYTES 1000

// Defines the memory that will actually hold the streams within the stream
// buffer.
static uint8_t ucStorageBuffer[ STORAGE_SIZE_BYTES ];

// The variable used to hold the stream buffer structure.
StaticStreamBuffer_t xStreamBufferStruct;

void MyFunction( void )
{
StreamBufferHandle_t xStreamBuffer;
```

(下页继续)

(续上页)

```
const size_t xTriggerLevel = 1;

    xStreamBuffer = xStreamBufferCreateStatic( sizeof( ucBufferStorage ),
                                               xTriggerLevel,
                                               ucBufferStorage,
                                               &xStreamBufferStruct );

    // As neither the pucStreamBufferStorageArea or pxStaticStreamBuffer
    // parameters were NULL, xStreamBuffer will not be NULL, and can be used to
    // reference the created stream buffer in other stream buffer API calls.

    // Other code that uses the stream buffer can go here.
}
```

Return If the stream buffer is created successfully then a handle to the created stream buffer is returned. If either pucStreamBufferStorageArea or pxStaticstreamBuffer are NULL then NULL is returned.

Parameters

- `xBufferSizeBytes`: The size, in bytes, of the buffer pointed to by the pucStreamBufferStorageArea parameter.
- `xTriggerLevelBytes`: The number of bytes that must be in the stream buffer before a task that is blocked on the stream buffer to wait for data is moved out of the blocked state. For example, if a task is blocked on a read of an empty stream buffer that has a trigger level of 1 then the task will be unblocked when a single byte is written to the buffer or the task's block time expires. As another example, if a task is blocked on a read of an empty stream buffer that has a trigger level of 10 then the task will not be unblocked until the stream buffer contains at least 10 bytes or the task's block time expires. If a reading task's block time expires before the trigger level is reached then the task will still receive however many bytes are actually available. Setting a trigger level of 0 will result in a trigger level of 1 being used. It is not valid to specify a trigger level that is greater than the buffer size.
- `pucStreamBufferStorageArea`: Must point to a uint8_t array that is at least xBufferSizeBytes + 1 big. This is the array to which streams are copied when they are written to the stream buffer.
- `pxStaticStreamBuffer`: Must point to a variable of type StaticStreamBuffer_t, which will be used to hold the stream buffer's data structure.

Type Definitions

typedef struct StreamBufferDef_t ***StreamBufferHandle_t**

Message Buffer API

Header File

- freertos/include/freertos/message_buffer.h

Macros

xMessageBufferCreate(xBufferSizeBytes)

Creates a new message buffer using dynamically allocated memory. See xMessageBufferCreateStatic() for a version that uses statically allocated memory (memory that is allocated at compile time).

configSUPPORT_DYNAMIC_ALLOCATION must be set to 1 or left undefined in FreeRTOSConfig.h for xMessageBufferCreate() to be available.

Example use:

```
void vAFunction( void )
{
MessageBufferHandle_t xMessageBuffer;
```

(下页继续)

(续上页)

```
const size_t xMessageBufferSizeBytes = 100;

  // Create a message buffer that can hold 100 bytes.  The memory used to hold
  // both the message buffer structure and the messages themselves is allocated
  // dynamically.  Each message added to the buffer consumes an additional 4
  // bytes which are used to hold the lengh of the message.
  xMessageBuffer = xMessageBufferCreate( xMessageBufferSizeBytes );

  if( xMessageBuffer == NULL )
  {
      // There was not enough heap memory space available to create the
      // message buffer.
  }
  else
  {
      // The message buffer was created successfully and can now be used.
  }
```

Return If NULL is returned, then the message buffer cannot be created because there is insufficient heap memory available for FreeRTOS to allocate the message buffer data structures and storage area. A non-NULL value being returned indicates that the message buffer has been created successfully - the returned value should be stored as the handle to the created message buffer.

Parameters

- `xBufferSizeBytes`: The total number of bytes (not messages) the message buffer will be able to hold at any one time. When a message is written to the message buffer an additional sizeof(size_t) bytes are also written to store the message ' s length. sizeof(size_t) is typically 4 bytes on a 32-bit architecture, so on most 32-bit architectures a 10 byte message will take up 14 bytes of message buffer space.

xMessageBufferCreateStatic(xBufferSizeBytes, pucMessageBufferStorageArea, pxStaticMessageBuffer)

Creates a new message buffer using statically allocated memory. See xMessageBufferCreate() for a version that uses dynamically allocated memory.

Example use:

```
// Used to dimension the array used to hold the messages.  The available space
// will actually be one less than this, so 999.
#define STORAGE_SIZE_BYTES 1000

// Defines the memory that will actually hold the messages within the message
// buffer.
static uint8_t ucStorageBuffer[ STORAGE_SIZE_BYTES ];

// The variable used to hold the message buffer structure.
StaticMessageBuffer_t xMessageBufferStruct;

void MyFunction( void )
{
MessageBufferHandle_t xMessageBuffer;

  xMessageBuffer = xMessageBufferCreateStatic( sizeof( ucBufferStorage ),
                                               ucBufferStorage,
                                               &xMessageBufferStruct );

  // As neither the pucMessageBufferStorageArea or pxStaticMessageBuffer
  // parameters were NULL, xMessageBuffer will not be NULL, and can be used to
  // reference the created message buffer in other message buffer API calls.

  // Other code that uses the message buffer can go here.
}
```

Return If the message buffer is created successfully then a handle to the created message buffer is returned. If either pucMessageBufferStorageArea or pxStaticmessageBuffer are NULL then NULL is returned.

Parameters

- `xBufferSizeBytes`: The size, in bytes, of the buffer pointed to by the pucMessageBufferStorageArea parameter. When a message is written to the message buffer an additional sizeof(size_t) bytes are also written to store the message's length. sizeof(size_t) is typically 4 bytes on a 32-bit architecture, so on most 32-bit architecture a 10 byte message will take up 14 bytes of message buffer space. The maximum number of bytes that can be stored in the message buffer is actually (xBufferSizeBytes - 1).
- `pucMessageBufferStorageArea`: Must point to a uint8_t array that is at least xBufferSizeBytes + 1 big. This is the array to which messages are copied when they are written to the message buffer.
- `pxStaticMessageBuffer`: Must point to a variable of type StaticMessageBuffer_t, which will be used to hold the message buffer's data structure.

xMessageBufferSend(xMessageBuffer, pvTxData, xDataLengthBytes, xTicksToWait)

Sends a discrete message to the message buffer. The message can be any length that fits within the buffer's free space, and is copied into the buffer.

NOTE: Uniquely among FreeRTOS objects, the stream buffer implementation (so also the message buffer implementation, as message buffers are built on top of stream buffers) assumes there is only one task or interrupt that will write to the buffer (the writer), and only one task or interrupt that will read from the buffer (the reader). It is safe for the writer and reader to be different tasks or interrupts, but, unlike other FreeRTOS objects, it is not safe to have multiple different writers or multiple different readers. If there are to be multiple different writers then the application writer must place each call to a writing API function (such as xMessageBufferSend()) inside a critical section and set the send block time to 0. Likewise, if there are to be multiple different readers then the application writer must place each call to a reading API function (such as xMessageBufferRead()) inside a critical section and set the receive block time to 0.

Use xMessageBufferSend() to write to a message buffer from a task. Use xMessageBufferSendFromISR() to write to a message buffer from an interrupt service routine (ISR).

Example use:

```
void vAFunction( MessageBufferHandle_t xMessageBuffer )
{
size_t xBytesSent;
uint8_t ucArrayToSend[] = { 0, 1, 2, 3 };
char *pcStringToSend = "String to send";
const TickType_t x100ms = pdMS_TO_TICKS( 100 );

  // Send an array to the message buffer, blocking for a maximum of 100ms to
  // wait for enough space to be available in the message buffer.
  xBytesSent = xMessageBufferSend( xMessageBuffer, ( void * ) ucArrayToSend,␣
↪sizeof( ucArrayToSend ), x100ms );

  if( xBytesSent != sizeof( ucArrayToSend ) )
  {
      // The call to xMessageBufferSend() times out before there was enough
      // space in the buffer for the data to be written.
  }

  // Send the string to the message buffer.  Return immediately if there is
  // not enough space in the buffer.
  xBytesSent = xMessageBufferSend( xMessageBuffer, ( void * ) pcStringToSend,␣
↪strlen( pcStringToSend ), 0 );

  if( xBytesSent != strlen( pcStringToSend ) )
  {
      // The string could not be added to the message buffer because there was
      // not enough free space in the buffer.
  }
```

(下页继续)

(续上页)

```
}
```

Return The number of bytes written to the message buffer. If the call to xMessageBufferSend() times out before there was enough space to write the message into the message buffer then zero is returned. If the call did not time out then xDataLengthBytes is returned.

Parameters

- `xMessageBuffer`: The handle of the message buffer to which a message is being sent.
- `pvTxData`: A pointer to the message that is to be copied into the message buffer.
- `xDataLengthBytes`: The length of the message. That is, the number of bytes to copy from pvTxData into the message buffer. When a message is written to the message buffer an additional sizeof(size_t) bytes are also written to store the message's length. sizeof(size_t) is typically 4 bytes on a 32-bit architecture, so on most 32-bit architecture setting xDataLengthBytes to 20 will reduce the free space in the message buffer by 24 bytes (20 bytes of message data and 4 bytes to hold the message length).
- `xTicksToWait`: The maximum amount of time the calling task should remain in the Blocked state to wait for enough space to become available in the message buffer, should the message buffer have insufficient space when xMessageBufferSend() is called. The calling task will never block if xTicksToWait is zero. The block time is specified in tick periods, so the absolute time it represents is dependent on the tick frequency. The macro pdMS_TO_TICKS() can be used to convert a time specified in milliseconds into a time specified in ticks. Setting xTicksToWait to portMAX_DELAY will cause the task to wait indefinitely (without timing out), provided INCLUDE_vTaskSuspend is set to 1 in FreeRTOSConfig.h. Tasks do not use any CPU time when they are in the Blocked state.

xMessageBufferSendFromISR(xMessageBuffer, pvTxData, xDataLengthBytes, pxHigherPriorityTaskWoken)

Interrupt safe version of the API function that sends a discrete message to the message buffer. The message can be any length that fits within the buffer's free space, and is copied into the buffer.

NOTE: Uniquely among FreeRTOS objects, the stream buffer implementation (so also the message buffer implementation, as message buffers are built on top of stream buffers) assumes there is only one task or interrupt that will write to the buffer (the writer), and only one task or interrupt that will read from the buffer (the reader). It is safe for the writer and reader to be different tasks or interrupts, but, unlike other FreeRTOS objects, it is not safe to have multiple different writers or multiple different readers. If there are to be multiple different writers then the application writer must place each call to a writing API function (such as xMessageBufferSend()) inside a critical section and set the send block time to 0. Likewise, if there are to be multiple different readers then the application writer must place each call to a reading API function (such as xMessageBufferRead()) inside a critical section and set the receive block time to 0.

Use xMessageBufferSend() to write to a message buffer from a task. Use xMessageBufferSendFromISR() to write to a message buffer from an interrupt service routine (ISR).

Example use:

```
// A message buffer that has already been created.
MessageBufferHandle_t xMessageBuffer;

void vAnInterruptServiceRoutine( void )
{
size_t xBytesSent;
char *pcStringToSend = "String to send";
BaseType_t xHigherPriorityTaskWoken = pdFALSE; // Initialised to pdFALSE.

  // Attempt to send the string to the message buffer.
  xBytesSent = xMessageBufferSendFromISR( xMessageBuffer,
                                          ( void * ) pcStringToSend,
                                          strlen( pcStringToSend ),
                                          &xHigherPriorityTaskWoken );

  if( xBytesSent != strlen( pcStringToSend ) )
  {
```

(下页继续)

(续上页)

```
        // The string could not be added to the message buffer because there was
        // not enough free space in the buffer.
    }

    // If xHigherPriorityTaskWoken was set to pdTRUE inside
    // xMessageBufferSendFromISR() then a task that has a priority above the
    // priority of the currently executing task was unblocked and a context
    // switch should be performed to ensure the ISR returns to the unblocked
    // task.  In most FreeRTOS ports this is done by simply passing
    // xHigherPriorityTaskWoken into portYIELD_FROM_ISR(), which will test the
    // variables value, and perform the context switch if necessary.  Check the
    // documentation for the port in use for port specific instructions.
    portYIELD_FROM_ISR( xHigherPriorityTaskWoken );
}
```

Return The number of bytes actually written to the message buffer. If the message buffer didn't have enough free space for the message to be stored then 0 is returned, otherwise xDataLengthBytes is returned.

Parameters

- `xMessageBuffer`: The handle of the message buffer to which a message is being sent.
- `pvTxData`: A pointer to the message that is to be copied into the message buffer.
- `xDataLengthBytes`: The length of the message. That is, the number of bytes to copy from pvTxData into the message buffer. When a message is written to the message buffer an additional sizeof(size_t) bytes are also written to store the message's length. sizeof(size_t) is typically 4 bytes on a 32-bit architecture, so on most 32-bit architecture setting xDataLengthBytes to 20 will reduce the free space in the message buffer by 24 bytes (20 bytes of message data and 4 bytes to hold the message length).
- `pxHigherPriorityTaskWoken`: It is possible that a message buffer will have a task blocked on it waiting for data. Calling xMessageBufferSendFromISR() can make data available, and so cause a task that was waiting for data to leave the Blocked state. If calling xMessageBufferSendFromISR() causes a task to leave the Blocked state, and the unblocked task has a priority higher than the currently executing task (the task that was interrupted), then, internally, xMessageBufferSendFromISR() will set *pxHigherPriorityTaskWoken to pdTRUE. If xMessageBufferSendFromISR() sets this value to pdTRUE, then normally a context switch should be performed before the interrupt is exited. This will ensure that the interrupt returns directly to the highest priority Ready state task. *pxHigherPriorityTaskWoken should be set to pdFALSE before it is passed into the function. See the code example below for an example.

xMessageBufferReceive(xMessageBuffer, pvRxData, xBufferLengthBytes, xTicksToWait)

Receives a discrete message from a message buffer. Messages can be of variable length and are copied out of the buffer.

NOTE: Uniquely among FreeRTOS objects, the stream buffer implementation (so also the message buffer implementation, as message buffers are built on top of stream buffers) assumes there is only one task or interrupt that will write to the buffer (the writer), and only one task or interrupt that will read from the buffer (the reader). It is safe for the writer and reader to be different tasks or interrupts, but, unlike other FreeRTOS objects, it is not safe to have multiple different writers or multiple different readers. If there are to be multiple different writers then the application writer must place each call to a writing API function (such as xMessageBufferSend()) inside a critical section and set the send block time to 0. Likewise, if there are to be multiple different readers then the application writer must place each call to a reading API function (such as xMessageBufferRead()) inside a critical section and set the receive block time to 0.

Use xMessageBufferReceive() to read from a message buffer from a task. Use xMessageBufferReceiveFromISR() to read from a message buffer from an interrupt service routine (ISR).

Example use:

```
void vAFunction( MessageBuffer_t xMessageBuffer )
{
uint8_t ucRxData[ 20 ];
size_t xReceivedBytes;
```

(下页继续)

(续上页)

```
const TickType_t xBlockTime = pdMS_TO_TICKS( 20 );

  // Receive the next message from the message buffer.  Wait in the Blocked
  // state (so not using any CPU processing time) for a maximum of 100ms for
  // a message to become available.
  xReceivedBytes = xMessageBufferReceive( xMessageBuffer,
                                          ( void * ) ucRxData,
                                          sizeof( ucRxData ),
                                          xBlockTime );

  if( xReceivedBytes > 0 )
  {
      // A ucRxData contains a message that is xReceivedBytes long.  Process
      // the message here....
  }
}
```

Return The length, in bytes, of the message read from the message buffer, if any. If xMessageBufferReceive() times out before a message became available then zero is returned. If the length of the message is greater than xBufferLengthBytes then the message will be left in the message buffer and zero is returned.

Parameters

- `xMessageBuffer`: The handle of the message buffer from which a message is being received.
- `pvRxData`: A pointer to the buffer into which the received message is to be copied.
- `xBufferLengthBytes`: The length of the buffer pointed to by the pvRxData parameter. This sets the maximum length of the message that can be received. If xBufferLengthBytes is too small to hold the next message then the message will be left in the message buffer and 0 will be returned.
- `xTicksToWait`: The maximum amount of time the task should remain in the Blocked state to wait for a message, should the message buffer be empty. xMessageBufferReceive() will return immediately if xTicksToWait is zero and the message buffer is empty. The block time is specified in tick periods, so the absolute time it represents is dependent on the tick frequency. The macro pdMS_TO_TICKS() can be used to convert a time specified in milliseconds into a time specified in ticks. Setting xTicksToWait to portMAX_DELAY will cause the task to wait indefinitely (without timing out), provided INCLUDE_vTaskSuspend is set to 1 in FreeRTOSConfig.h. Tasks do not use any CPU time when they are in the Blocked state.

xMessageBufferReceiveFromISR(xMessageBuffer, pvRxData, xBufferLengthBytes, pxHigherPriorityTaskWoken)

An interrupt safe version of the API function that receives a discrete message from a message buffer. Messages can be of variable length and are copied out of the buffer.

NOTE: Uniquely among FreeRTOS objects, the stream buffer implementation (so also the message buffer implementation, as message buffers are built on top of stream buffers) assumes there is only one task or interrupt that will write to the buffer (the writer), and only one task or interrupt that will read from the buffer (the reader). It is safe for the writer and reader to be different tasks or interrupts, but, unlike other FreeRTOS objects, it is not safe to have multiple different writers or multiple different readers. If there are to be multiple different writers then the application writer must place each call to a writing API function (such as xMessageBufferSend()) inside a critical section and set the send block time to 0. Likewise, if there are to be multiple different readers then the application writer must place each call to a reading API function (such as xMessageBufferRead()) inside a critical section and set the receive block time to 0.

Use xMessageBufferReceive() to read from a message buffer from a task. Use xMessageBufferReceiveFromISR() to read from a message buffer from an interrupt service routine (ISR).

Example use:

```
// A message buffer that has already been created.
MessageBuffer_t xMessageBuffer;

void vAnInterruptServiceRoutine( void )
{
```

(下页继续)

(续上页)

```
uint8_t ucRxData[ 20 ];
size_t xReceivedBytes;
BaseType_t xHigherPriorityTaskWoken = pdFALSE;  // Initialised to pdFALSE.

  // Receive the next message from the message buffer.
  xReceivedBytes = xMessageBufferReceiveFromISR( xMessageBuffer,
                                                 ( void * ) ucRxData,
                                                 sizeof( ucRxData ),
                                                 &xHigherPriorityTaskWoken );

  if( xReceivedBytes > 0 )
  {
      // A ucRxData contains a message that is xReceivedBytes long.  Process
      // the message here....
  }

  // If xHigherPriorityTaskWoken was set to pdTRUE inside
  // xMessageBufferReceiveFromISR() then a task that has a priority above the
  // priority of the currently executing task was unblocked and a context
  // switch should be performed to ensure the ISR returns to the unblocked
  // task.  In most FreeRTOS ports this is done by simply passing
  // xHigherPriorityTaskWoken into portYIELD_FROM_ISR(), which will test the
  // variables value, and perform the context switch if necessary.  Check the
  // documentation for the port in use for port specific instructions.
  portYIELD_FROM_ISR( xHigherPriorityTaskWoken );
}
```

Return The length, in bytes, of the message read from the message buffer, if any.

Parameters

- `xMessageBuffer`: The handle of the message buffer from which a message is being received.
- `pvRxData`: A pointer to the buffer into which the received message is to be copied.
- `xBufferLengthBytes`: The length of the buffer pointed to by the pvRxData parameter. This sets the maximum length of the message that can be received. If xBufferLengthBytes is too small to hold the next message then the message will be left in the message buffer and 0 will be returned.
- `pxHigherPriorityTaskWoken`: It is possible that a message buffer will have a task blocked on it waiting for space to become available. Calling xMessageBufferReceiveFromISR() can make space available, and so cause a task that is waiting for space to leave the Blocked state. If calling xMessageBufferReceiveFromISR() causes a task to leave the Blocked state, and the unblocked task has a priority higher than the currently executing task (the task that was interrupted), then, internally, xMessageBufferReceiveFromISR() will set *pxHigherPriorityTaskWoken to pdTRUE. If xMessageBufferReceiveFromISR() sets this value to pdTRUE, then normally a context switch should be performed before the interrupt is exited. That will ensure the interrupt returns directly to the highest priority Ready state task. *pxHigherPriorityTaskWoken should be set to pdFALSE before it is passed into the function. See the code example below for an example.

vMessageBufferDelete(xMessageBuffer)

Deletes a message buffer that was previously created using a call to xMessageBufferCreate() or xMessageBufferCreateStatic(). If the message buffer was created using dynamic memory (that is, by xMessageBufferCreate()), then the allocated memory is freed.

A message buffer handle must not be used after the message buffer has been deleted.

Parameters

- `xMessageBuffer`: The handle of the message buffer to be deleted.

xMessageBufferIsFull(xMessageBuffer)

Tests to see if a message buffer is full. A message buffer is full if it cannot accept any more messages, of any size, until space is made available by a message being removed from the message buffer.

Return If the message buffer referenced by xMessageBuffer is full then pdTRUE is returned. Otherwise pdFALSE is returned.

Parameters

- `xMessageBuffer`: The handle of the message buffer being queried.

xMessageBufferIsEmpty(xMessageBuffer)

Tests to see if a message buffer is empty (does not contain any messages).

Return If the message buffer referenced by xMessageBuffer is empty then pdTRUE is returned. Otherwise pdFALSE is returned.

Parameters

- `xMessageBuffer`: The handle of the message buffer being queried.

xMessageBufferReset(xMessageBuffer)

Resets a message buffer to its initial empty state, discarding any message it contained.

A message buffer can only be reset if there are no tasks blocked on it.

Return If the message buffer was reset then pdPASS is returned. If the message buffer could not be reset because either there was a task blocked on the message queue to wait for space to become available, or to wait for a a message to be available, then pdFAIL is returned.

Parameters

- `xMessageBuffer`: The handle of the message buffer being reset.

xMessageBufferSpaceAvailable(xMessageBuffer)

Returns the number of bytes of free space in the message buffer.

Return The number of bytes that can be written to the message buffer before the message buffer would be full. When a message is written to the message buffer an additional sizeof(size_t) bytes are also written to store the message' s length. sizeof(size_t) is typically 4 bytes on a 32-bit architecture, so if xMessageBufferSpacesAvailable() returns 10, then the size of the largest message that can be written to the message buffer is 6 bytes.

Parameters

- `xMessageBuffer`: The handle of the message buffer being queried.

xMessageBufferSpacesAvailable(xMessageBuffer)

xMessageBufferNextLengthBytes(xMessageBuffer)

Returns the length (in bytes) of the next message in a message buffer. Useful if xMessageBufferReceive() returned 0 because the size of the buffer passed into xMessageBufferReceive() was too small to hold the next message.

Return The length (in bytes) of the next message in the message buffer, or 0 if the message buffer is empty.

Parameters

- `xMessageBuffer`: The handle of the message buffer being queried.

xMessageBufferSendCompletedFromISR(xMessageBuffer, pxHigherPriorityTaskWoken)

For advanced users only.

The sbSEND_COMPLETED() macro is called from within the FreeRTOS APIs when data is sent to a message buffer or stream buffer. If there was a task that was blocked on the message or stream buffer waiting for data to arrive then the sbSEND_COMPLETED() macro sends a notification to the task to remove it from the Blocked state. xMessageBufferSendCompletedFromISR() does the same thing. It is provided to enable application writers to implement their own version of sbSEND_COMPLETED(), and MUST NOT BE USED AT ANY OTHER TIME.

See the example implemented in FreeRTOS/Demo/Minimal/MessageBufferAMP.c for additional information.

Return If a task was removed from the Blocked state then pdTRUE is returned. Otherwise pdFALSE is returned.

Parameters

- `xMessageBuffer`: The handle of the stream buffer to which data was written.
- `pxHigherPriorityTaskWoken`: *pxHigherPriorityTaskWoken should be initialised to pdFALSE before it is passed into xMessageBufferSendCompletedFromISR(). If calling xMessageBufferSendCompletedFromISR() removes a task from the Blocked state, and the task has a priority above the priority of the currently running task, then *pxHigherPriorityTaskWoken will get set to pdTRUE indicating that a context switch should be performed before exiting the ISR.

xMessageBufferReceiveCompletedFromISR(xMessageBuffer, pxHigherPriorityTaskWoken)

For advanced users only.

The sbRECEIVE_COMPLETED() macro is called from within the FreeRTOS APIs when data is read out of a message buffer or stream buffer. If there was a task that was blocked on the message or stream buffer waiting for data to arrive then the sbRECEIVE_COMPLETED() macro sends a notification to the task to remove it from the Blocked state. xMessageBufferReceiveCompletedFromISR() does the same thing. It is provided to enable application writers to implement their own version of sbRECEIVE_COMPLETED(), and MUST NOT BE USED AT ANY OTHER TIME.

See the example implemented in FreeRTOS/Demo/Minimal/MessageBufferAMP.c for additional information.

Return If a task was removed from the Blocked state then pdTRUE is returned. Otherwise pdFALSE is returned.

Parameters

- `xMessageBuffer`: The handle of the stream buffer from which data was read.
- `pxHigherPriorityTaskWoken`: *pxHigherPriorityTaskWoken should be initialised to pdFALSE before it is passed into xMessageBufferReceiveCompletedFromISR(). If calling xMessageBufferReceiveCompletedFromISR() removes a task from the Blocked state, and the task has a priority above the priority of the currently running task, then *pxHigherPriorityTaskWoken will get set to pdTRUE indicating that a context switch should be performed before exiting the ISR.

Type Definitions

typedef void ***MessageBufferHandle_t**

Type by which message buffers are referenced. For example, a call to xMessageBufferCreate() returns an MessageBufferHandle_t variable that can then be used as a parameter to xMessageBufferSend(), xMessageBufferReceive(), etc.

2.7.11 FreeRTOS Additions

Overview

ESP-IDF FreeRTOS is based on the Xtensa port of FreeRTOS v10.2.0 with significant modifications for SMP compatibility (see *ESP-IDF FreeRTOS SMP Changes*). However various features specific to ESP-IDF FreeRTOS have been added. The features are as follows:

Ring Buffers: Ring buffers were added to provide a form of buffer that could accept entries of arbitrary lengths.

Hooks: ESP-IDF FreeRTOS hooks provides support for registering extra Idle and Tick hooks at run time. Moreover, the hooks can be asymmetric amongst both CPUs.

Component Specific Properties: Currently added only one component specific property *ORIG_INCLUDE_PATH*.

Ring Buffers

The ESP-IDF FreeRTOS ring buffer is a strictly FIFO buffer that supports arbitrarily sized items. Ring buffers are a more memory efficient alternative to FreeRTOS queues in situations where the size of items is variable. The capacity of a ring buffer is not measured by the number of items it can store, but rather by the amount of memory used for storing items. The ring buffer provides API to send an item, or to allocate space for an item in the ring buffer to be filled manually by the user. For efficiency reasons, **items are always retrieved from the ring buffer by reference**. As a result, all retrieved items *must also be returned* to the ring buffer by using `vRingbufferReturnItem()` or `vRingbufferReturnItemFromISR()`, in order for them to be removed from the ring buffer completely. The ring buffers are split into the three following types:

No-Split buffers will guarantee that an item is stored in contiguous memory and will not attempt to split an item under any circumstances. Use no-split buffers when items must occupy contiguous memory. *Only this buffer type allows you getting the data item address and writting to the item by yourself.*

Allow-Split buffers will allow an item to be split when wrapping around if doing so will allow the item to be stored. Allow-split buffers are more memory efficient than no-split buffers but can return an item in two parts when retrieving.

Byte buffers do not store data as separate items. All data is stored as a sequence of bytes, and any number of bytes and be sent or retrieved each time. Use byte buffers when separate items do not need to be maintained (e.g. a byte stream).

注解： No-split/allow-split buffers will always store items at 32-bit aligned addresses. Therefore when retrieving an item, the item pointer is guaranteed to be 32-bit aligned. This is useful especially when you need to send some data to the DMA.

注解： Each item stored in no-split/allow-split buffers will **require an additional 8 bytes for a header**. Item sizes will also be rounded up to a 32-bit aligned size (multiple of 4 bytes), however the true item size is recorded within the header. The sizes of no-split/allow-split buffers will also be rounded up when created.

Usage The following example demonstrates the usage of *xRingbufferCreate()* and *xRingbufferSend()* to create a ring buffer then send an item to it.

```
#include "freertos/ringbuf.h"
static char tx_item[] = "test_item";

...

    //Create ring buffer
    RingbufHandle_t buf_handle;
    buf_handle = xRingbufferCreate(1028, RINGBUF_TYPE_NOSPLIT);
    if (buf_handle == NULL) {
        printf("Failed to create ring buffer\n");
    }

    //Send an item
    UBaseType_t res =  xRingbufferSend(buf_handle, tx_item, sizeof(tx_item), pdMS_
↪TO_TICKS(1000));
    if (res != pdTRUE) {
        printf("Failed to send item\n");
    }
```

The following example demonstrates the usage of *xRingbufferSendAcquire()* and *xRingbufferSendComplete()* instead of *xRingbufferSend()* to apply for the memory on the ring buffer (of type *RINGBUF_TYPE_NOSPLIT*) and then send an item to it. This way adds one more step, but allows getting the address of the memory to write to, and writing to the memory yourself.

```
#include "freertos/ringbuf.h"
#include "soc/lldesc.h"

typedef struct {
    lldesc_t dma_desc;
    uint8_t buf[1];
} dma_item_t;

#define DMA_ITEM_SIZE(N) (sizeof(lldesc_t)+(((N)+3)&(~3)))

...

    //Retrieve space for DMA descriptor and corresponding data buffer
    //This has to be done with SendAcquire, or the address may be different when␣
↪copy
    dma_item_t item;
    UBaseType_t res =  xRingbufferSendAcquire(buf_handle,
                       &item, DMA_ITEM_SIZE(buffer_size), pdMS_TO_TICKS(1000));
```

(下页继续)

(续上页)

```
    if (res != pdTRUE) {
        printf("Failed to acquire memory for item\n");
    }
    item->dma_desc = (lldesc_t) {
        .size = buffer_size,
        .length = buffer_size,
        .eof = 0,
        .owner = 1,
        .buf = &item->buf,
    };
    //Actually send to the ring buffer for consumer to use
    res = xRingbufferSendComplete(buf_handle, &item);
    if (res != pdTRUE) {
        printf("Failed to send item\n");
    }
```

The following example demonstrates retrieving and returning an item from a **no-split ring buffer** using *xRingbufferReceive()* and *vRingbufferReturnItem()*

```
...

    //Receive an item from no-split ring buffer
    size_t item_size;
    char *item = (char *)xRingbufferReceive(buf_handle, &item_size, pdMS_TO_
↪TICKS(1000));

    //Check received item
    if (item != NULL) {
        //Print item
        for (int i = 0; i < item_size; i++) {
            printf("%c", item[i]);
        }
        printf("\n");
        //Return Item
        vRingbufferReturnItem(buf_handle, (void *)item);
    } else {
        //Failed to receive item
        printf("Failed to receive item\n");
    }
```

The following example demonstrates retrieving and returning an item from an **allow-split ring buffer** using *xRingbufferReceiveSplit()* and *vRingbufferReturnItem()*

```
...

    //Receive an item from allow-split ring buffer
    size_t item_size1, item_size2;
    char *item1, *item2;
    BaseType_t ret = xRingbufferReceiveSplit(buf_handle, (void **)&item1, (void␣
↪**)&item2, &item_size1, &item_size2, pdMS_TO_TICKS(1000));

    //Check received item
    if (ret == pdTRUE && item1 != NULL) {
        for (int i = 0; i < item_size1; i++) {
            printf("%c", item1[i]);
        }
        vRingbufferReturnItem(buf_handle, (void *)item1);
        //Check if item was split
        if (item2 != NULL) {
            for (int i = 0; i < item_size2; i++) {
                printf("%c", item2[i]);
```

(下页继续)

(续上页)

```
            }
            vRingbufferReturnItem(buf_handle, (void *)item2);
        }
        printf("\n");
    } else {
        //Failed to receive item
        printf("Failed to receive item\n");
    }
```

The following example demonstrates retrieving and returning an item from a **byte buffer** using *xRingbufferReceiveUpTo()* and *vRingbufferReturnItem()*

```
...

    //Receive data from byte buffer
    size_t item_size;
    char *item = (char *)xRingbufferReceiveUpTo(buf_handle, &item_size, pdMS_TO_
↪TICKS(1000), sizeof(tx_item));

    //Check received data
    if (item != NULL) {
        //Print item
        for (int i = 0; i < item_size; i++) {
            printf("%c", item[i]);
        }
        printf("\n");
        //Return Item
        vRingbufferReturnItem(buf_handle, (void *)item);
    } else {
        //Failed to receive item
        printf("Failed to receive item\n");
    }
```

For ISR safe versions of the functions used above, call *xRingbufferSendFromISR()*, *xRingbufferReceiveFromISR()*, *xRingbufferReceiveSplitFromISR()*, *xRingbufferReceiveUpToFromISR()*, and *vRingbufferReturnItemFromISR()*

注解: Two calls to RingbufferReceive[UpTo][FromISR]() are required if the bytes wraps around the end of the ring buffer.

Sending to Ring Buffer The following diagrams illustrate the differences between no-split/allow-split buffers and byte buffers with regards to sending items/data. The diagrams assume that three items of sizes **18, 3, and 27 bytes** are sent respectively to a **buffer of 128 bytes**.

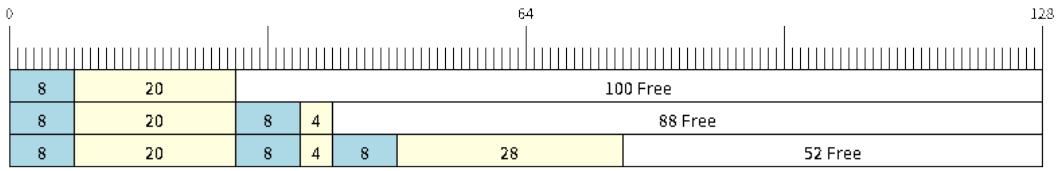

图 27: Sending items to no-split/allow-split ring buffers

For no-split/allow-split buffers, a header of 8 bytes precedes every data item. Furthermore, the space occupied by each item is **rounded up to the nearest 32-bit aligned size** in order to maintain overall 32-bit alignment. However

the true size of the item is recorded inside the header which will be returned when the item is retrieved.

Referring to the diagram above, the 18, 3, and 27 byte items are **rounded up to 20, 4, and 28 bytes** respectively. An 8 byte header is then added in front of each item.

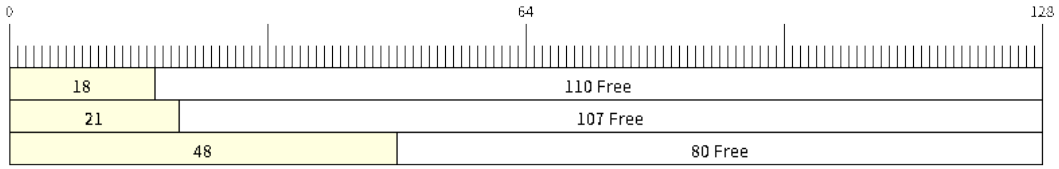

图 28: Sending items to byte buffers

Byte buffers treat data as a sequence of bytes and does not incur any overhead (no headers). As a result, all data sent to a byte buffer is merged into a single item.

Referring to the diagram above, the 18, 3, and 27 byte items are sequentially written to the byte buffer and **merged into a single item of 48 bytes**.

Using SendAcquire and SendComplete Items in no-split buffers are acquired (by SendAcquire) in strict FIFO order and must be sent to the buffer by SendComplete for the data to be accessible by the consumer. Multiple items can be sent or acquired without calling SendComplete, and the items do not necessarily need to be completed in the order they were acquired. However the receiving of data items must occur in FIFO order, therefore not calling SendComplete the earliest acquired item will prevent the subsequent items from being received.

The following diagrams illustrate what will happen when SendAcquire/SendComplete don't happen in the same order. At the beginning, there is already an data item of 16 bytes sent to the ring buffer. Then SendAcquire is called to acquire space of 20, 8, 24 bytes on the ring buffer.

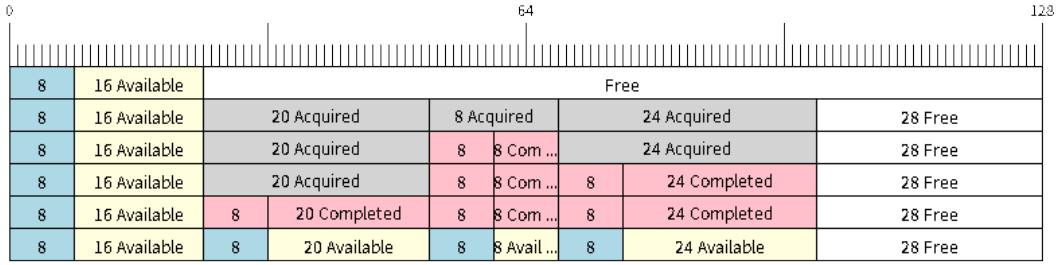

图 29: SendAcquire/SendComplete items in no-split ring buffers

After that, we fill (use) the buffers, and send them to the ring buffer by SendComplete in the order of 8, 24, 20. When 8 bytes and 24 bytes data are sent, the consumer still can only get the 16 bytes data item. Due to the usage if 20 bytes item is not complete, it's not available, nor the following data items.

When the 20 bytes item is finally completed, all the 3 data items can be received now, in the order of 20, 8, 24 bytes, right after the 16 bytes item existing in the buffer at the beginning.

Allow-split/byte buffers do not allow using SendAcquire/SendComplete since acquired buffers are required to be complete (not wrapped).

Wrap around The following diagrams illustrate the differences between no-split, allow-split, and byte buffers when a sent item requires a wrap around. The diagrams assumes a buffer of **128 bytes** with **56 bytes of free space that wraps around** and a sent item of **28 bytes**.

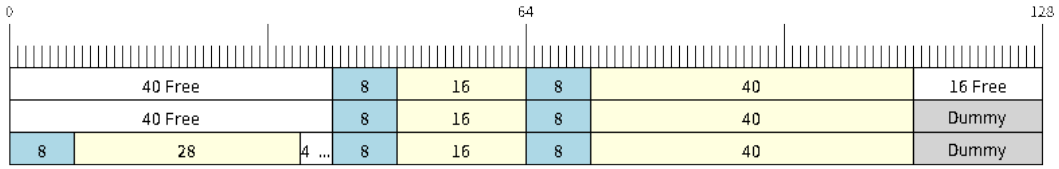

图 30: Wrap around in no-split buffers

No-split buffers will **only store an item in continuous free space and will not split an item under any circumstances**. When the free space at the tail of the buffer is insufficient to completely store the item and its header, the free space at the tail will be **marked as dummy data**. The buffer will then wrap around and store the item in the free space at the head of the buffer.

Referring to the diagram above, the 16 bytes of free space at the tail of the buffer is insufficient to store the 28 byte item. Therefore the 16 bytes is marked as dummy data and the item is written to the free space at the head of the buffer instead.

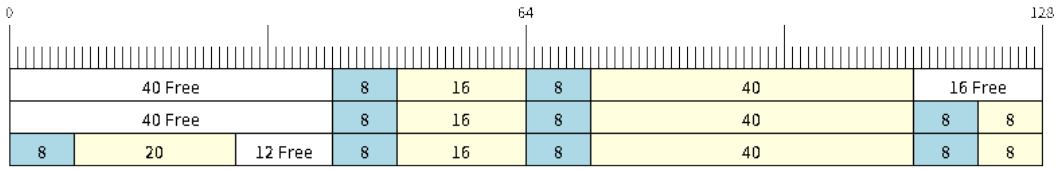

图 31: Wrap around in allow-split buffers

Allow-split buffers will attempt to **split the item into two parts** when the free space at the tail of the buffer is insufficient to store the item data and its header. Both parts of the split item will have their own headers (therefore incurring an extra 8 bytes of overhead).

Referring to the diagram above, the 16 bytes of free space at the tail of the buffer is insufficient to store the 28 byte item. Therefore the item is split into two parts (8 and 20 bytes) and written as two parts to the buffer.

注解: Allow-split buffers treats the both parts of the split item as two separate items, therefore call *xRingbufferReceiveSplit()* instead of *xRingbufferReceive()* to receive both parts of a split item in a thread safe manner.

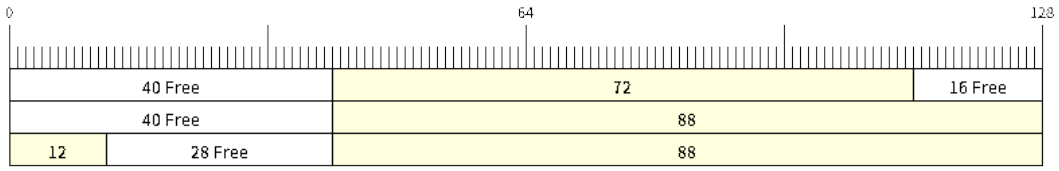

图 32: Wrap around in byte buffers

Byte buffers will **store as much data as possible into the free space at the tail of buffer**. The remaining data will then be stored in the free space at the head of the buffer. No overhead is incurred when wrapping around in byte buffers.

Referring to the diagram above, the 16 bytes of free space at the tail of the buffer is insufficient to completely store the 28 bytes of data. Therefore the 16 bytes of free space is filled with data, and the remaining 12 bytes are written to the free space at the head of the buffer. The buffer now contains data in two separate continuous parts, and each part continuous will be treated as a separate item by the byte buffer.

Retrieving/Returning The following diagrams illustrates the differences between no-split/allow-split and byte buffers in retrieving and returning data.

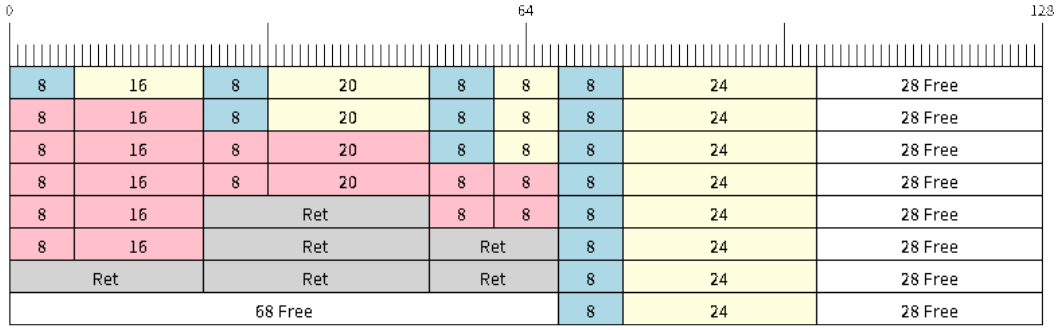

图 33: Retrieving/Returning items in no-split/allow-split ring buffers

Items in no-split/allow-split buffers are **retrieved in strict FIFO order** and **must be returned** for the occupied space to be freed. Multiple items can be retrieved before returning, and the items do not necessarily need to be returned in the order they were retrieved. However the freeing of space must occur in FIFO order, therefore not returning the earliest retrieved item will prevent the space of subsequent items from being freed.

Referring to the diagram above, the **16, 20, and 8 byte items are retrieved in FIFO order**. However the items are not returned in they were retrieved (20, 8, 16). As such, the space is not freed until the first item (16 byte) is returned.

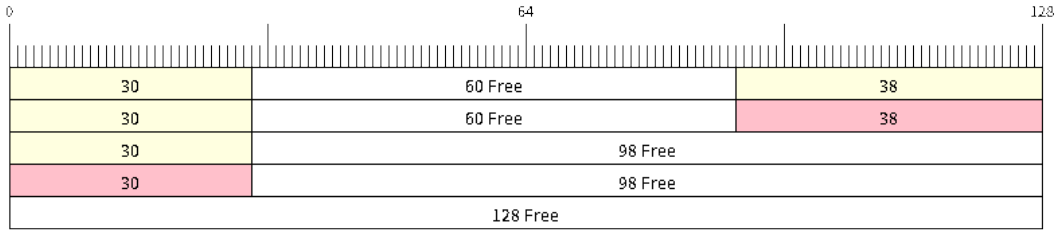

图 34: Retrieving/Returning data in byte buffers

Byte buffers **do not allow multiple retrievals before returning** (every retrieval must be followed by a return before another retrieval is permitted). When using `xRingbufferReceive()` or `xRingbufferReceiveFromISR()`, all continuous stored data will be retrieved. `xRingbufferReceiveUpTo()` or `xRingbufferReceiveUpToFromISR()` can be used to restrict the maximum number of bytes retrieved. Since every retrieval must be followed by a return, the space will be freed as soon as the data is returned.

Referring to the diagram above, the 38 bytes of continuous stored data at the tail of the buffer is retrieved, returned, and freed. The next call to `xRingbufferReceive()` or `xRingbufferReceiveFromISR()` then wraps around and does the same to the 30 bytes of continuous stored data at the head of the buffer.

Ring Buffers with Queue Sets Ring buffers can be added to FreeRTOS queue sets using `xRingbufferAddToQueueSetRead()` such that every time a ring buffer receives an item or data, the queue set is notified. Once

added to a queue set, every attempt to retrieve an item from a ring buffer should be preceded by a call to *xQueueSelectFromSet()*. To check whether the selected queue set member is the ring buffer, call *xRingbufferCanRead()*.

The following example demonstrates queue set usage with ring buffers.

```
#include "freertos/queue.h"
#include "freertos/ringbuf.h"

...

    //Create ring buffer and queue set
    RingbufHandle_t buf_handle = xRingbufferCreate(1028, RINGBUF_TYPE_NOSPLIT);
    QueueSetHandle_t queue_set = xQueueCreateSet(3);

    //Add ring buffer to queue set
    if (xRingbufferAddToQueueSetRead(buf_handle, queue_set) != pdTRUE) {
        printf("Failed to add to queue set\n");
    }

...

    //Block on queue set
    xQueueSetMemberHandle member = xQueueSelectFromSet(queue_set, pdMS_TO_
↪TICKS(1000));

    //Check if member is ring buffer
    if (member != NULL && xRingbufferCanRead(buf_handle, member) == pdTRUE) {
        //Member is ring buffer, receive item from ring buffer
        size_t item_size;
        char *item = (char *)xRingbufferReceive(buf_handle, &item_size, 0);

        //Handle item
        ...

    } else {
        ...
    }
```

Ring Buffers with Static Allocation The *xRingbufferCreateStatic()* can be used to create ring buffers with specific memory requirements (such as a ring buffer being allocated in external RAM). All blocks of memory used by a ring buffer must be manually allocated beforehand then passed to the *xRingbufferCreateStatic()* to be initialized as a ring buffer. These blocks include the following:

- The ring buffer's data structure of type *StaticRingbuffer_t*
- The ring buffer's storage area of size `xBufferSize`. Note that `xBufferSize` must be 32-bit aligned for no-split/allow-split buffers.

The manner in which these blocks are allocated will depend on the users requirements (e.g. all blocks being statically declared, or dynamically allocated with specific capabilities such as external RAM).

注解: When deleting a ring buffer created via *xRingbufferCreateStatic()*, the function *vRingbufferDelete()* will not free any of the memory blocks. This must be done manually by the user after *vRingbufferDelete()* is called.

The code snippet below demonstrates a ring buffer being allocated entirely in external RAM.

```
#include "freertos/ringbuf.h"
#include "freertos/semphr.h"
#include "esp_heap_caps.h"
```

(下页继续)

(续上页)

```
#define BUFFER_SIZE     400      //32-bit aligned size
#define BUFFER_TYPE     RINGBUF_TYPE_NOSPLIT
...

//Allocate ring buffer data structure and storage area into external RAM
StaticRingbuffer_t *buffer_struct = (StaticRingbuffer_t *)heap_caps_
↪malloc(sizeof(StaticRingbuffer_t), MALLOC_CAP_SPIRAM);
uint8_t *buffer_storage = (uint8_t *)heap_caps_malloc(sizeof(uint8_t)*BUFFER_SIZE,␣
↪MALLOC_CAP_SPIRAM);

//Create a ring buffer with manually allocated memory
RingbufHandle_t handle = xRingbufferCreateStatic(BUFFER_SIZE, BUFFER_TYPE, buffer_
↪storage, buffer_struct);

...

//Delete the ring buffer after used
vRingbufferDelete(handle);

//Manually free all blocks of memory
free(buffer_struct);
free(buffer_storage);
```

Ring Buffer API Reference

注解: Ideally, ring buffers can be used with multiple tasks in an SMP fashion where the **highest priority task will always be serviced first.** However due to the usage of binary semaphores in the ring buffer's underlying implementation, priority inversion may occur under very specific circumstances.

The ring buffer governs sending by a binary semaphore which is given whenever space is freed on the ring buffer. The highest priority task waiting to send will repeatedly take the semaphore until sufficient free space becomes available or until it times out. Ideally this should prevent any lower priority tasks from being serviced as the semaphore should always be given to the highest priority task.

However in between iterations of acquiring the semaphore, there is a **gap in the critical section** which may permit another task (on the other core or with an even higher priority) to free some space on the ring buffer and as a result give the semaphore. Therefore the semaphore will be given before the highest priority task can re-acquire the semaphore. This will result in the **semaphore being acquired by the second highest priority task** waiting to send, hence causing priority inversion.

This side effect will not affect ring buffer performance drastically given if the number of tasks using the ring buffer simultaneously is low, and the ring buffer is not operating near maximum capacity.

Header File

- esp_ringbuf/include/freertos/ringbuf.h

Functions

RingbufHandle_t **xRingbufferCreate**(size_t *xBufferSize*, *RingbufferType_t* *xBufferType*)

Create a ring buffer.

Note xBufferSize of no-split/allow-split buffers will be rounded up to the nearest 32-bit aligned size.

Return A handle to the created ring buffer, or NULL in case of error.

Parameters

- `[in] xBufferSize`: Size of the buffer in bytes. Note that items require space for overhead in no-split/allow-split buffers

- `[in] xBufferType`: Type of ring buffer, see documentation.

RingbufHandle_t **xRingbufferCreateNoSplit**(size_t *xItemSize*, size_t *xItemNum*)

Create a ring buffer of type RINGBUF_TYPE_NOSPLIT for a fixed item_size.

This API is similar to xRingbufferCreate(), but it will internally allocate additional space for the headers.

Return A RingbufHandle_t handle to the created ring buffer, or NULL in case of error.

Parameters

- `[in] xItemSize`: Size of each item to be put into the ring buffer
- `[in] xItemNum`: Maximum number of items the buffer needs to hold simultaneously

RingbufHandle_t **xRingbufferCreateStatic**(size_t *xBufferSize*, *RingbufferType_t* *xBufferType*, uint8_t **pucRingbufferStorage*, *StaticRingbuffer_t* **pxStaticRingbuffer*)

Create a ring buffer but manually provide the required memory.

Note xBufferSize of no-split/allow-split buffers MUST be 32-bit aligned.

Return A handle to the created ring buffer

Parameters

- `[in] xBufferSize`: Size of the buffer in bytes.
- `[in] xBufferType`: Type of ring buffer, see documentation
- `[in] pucRingbufferStorage`: Pointer to the ring buffer's storage area. Storage area must of the same size as specified by xBufferSize
- `[in] pxStaticRingbuffer`: Pointed to a struct of type StaticRingbuffer_t which will be used to hold the ring buffer's data structure

BaseType_t **xRingbufferSend**(*RingbufHandle_t* *xRingbuffer*, **const** void **pvItem*, size_t *xItemSize*, TickType_t *xTicksToWait*)

Insert an item into the ring buffer.

Attempt to insert an item into the ring buffer. This function will block until enough free space is available or until it times out.

Note For no-split/allow-split ring buffers, the actual size of memory that the item will occupy will be rounded up to the nearest 32-bit aligned size. This is done to ensure all items are always stored in 32-bit aligned fashion.

Return

- pdTRUE if succeeded
- pdFALSE on time-out or when the data is larger than the maximum permissible size of the buffer

Parameters

- `[in] xRingbuffer`: Ring buffer to insert the item into
- `[in] pvItem`: Pointer to data to insert. NULL is allowed if xItemSize is 0.
- `[in] xItemSize`: Size of data to insert.
- `[in] xTicksToWait`: Ticks to wait for room in the ring buffer.

BaseType_t **xRingbufferSendFromISR**(*RingbufHandle_t* *xRingbuffer*, **const** void **pvItem*, size_t *xItemSize*, BaseType_t **pxHigherPriorityTaskWoken*)

Insert an item into the ring buffer in an ISR.

Attempt to insert an item into the ring buffer from an ISR. This function will return immediately if there is insufficient free space in the buffer.

Note For no-split/allow-split ring buffers, the actual size of memory that the item will occupy will be rounded up to the nearest 32-bit aligned size. This is done to ensure all items are always stored in 32-bit aligned fashion.

Return

- pdTRUE if succeeded
- pdFALSE when the ring buffer does not have space.

Parameters

- `[in] xRingbuffer`: Ring buffer to insert the item into
- `[in] pvItem`: Pointer to data to insert. NULL is allowed if xItemSize is 0.
- `[in] xItemSize`: Size of data to insert.
- `[out] pxHigherPriorityTaskWoken`: Value pointed to will be set to pdTRUE if the function woke up a higher priority task.

BaseType_t **xRingbufferSendAcquire**(*RingbufHandle_t xRingbuffer*, void **ppvItem, size_t *xItemSize*, TickType_t *xTicksToWait*)

Acquire memory from the ring buffer to be written to by an external source and to be sent later.

Attempt to allocate buffer for an item to be sent into the ring buffer. This function will block until enough free space is available or until it timesout.

The item, as well as the following items `SendAcquire` or `Send` after it, will not be able to be read from the ring buffer until this item is actually sent into the ring buffer.

Note Only applicable for no-split ring buffers now, the actual size of memory that the item will occupy will be rounded up to the nearest 32-bit aligned size. This is done to ensure all items are always stored in 32-bit aligned fashion.

Return

- pdTRUE if succeeded
- pdFALSE on time-out or when the data is larger than the maximum permissible size of the buffer

Parameters

- `[in] xRingbuffer`: Ring buffer to allocate the memory
- `[out] ppvItem`: Double pointer to memory acquired (set to NULL if no memory were retrieved)
- `[in] xItemSize`: Size of item to acquire.
- `[in] xTicksToWait`: Ticks to wait for room in the ring buffer.

BaseType_t **xRingbufferSendComplete**(*RingbufHandle_t xRingbuffer*, void *pvItem)

Actually send an item into the ring buffer allocated before by `xRingbufferSendAcquire`.

Note Only applicable for no-split ring buffers. Only call for items allocated by `xRingbufferSendAcquire`.

Return

- pdTRUE if succeeded
- pdFALSE if fail for some reason.

Parameters

- `[in] xRingbuffer`: Ring buffer to insert the item into
- `[in] pvItem`: Pointer to item in allocated memory to insert.

void ***xRingbufferReceive**(*RingbufHandle_t xRingbuffer*, size_t *pxItemSize, TickType_t *xTicksToWait*)

Retrieve an item from the ring buffer.

Attempt to retrieve an item from the ring buffer. This function will block until an item is available or until it times out.

Note A call to vRingbufferReturnItem() is required after this to free the item retrieved.

Return

- Pointer to the retrieved item on success; *pxItemSize filled with the length of the item.
- NULL on timeout, *pxItemSize is untouched in that case.

Parameters

- `[in] xRingbuffer`: Ring buffer to retrieve the item from
- `[out] pxItemSize`: Pointer to a variable to which the size of the retrieved item will be written.
- `[in] xTicksToWait`: Ticks to wait for items in the ring buffer.

void ***xRingbufferReceiveFromISR**(*RingbufHandle_t xRingbuffer*, size_t *pxItemSize)

Retrieve an item from the ring buffer in an ISR.

Attempt to retrieve an item from the ring buffer. This function returns immediately if there are no items available for retrieval

Note A call to vRingbufferReturnItemFromISR() is required after this to free the item retrieved.

Note Byte buffers do not allow multiple retrievals before returning an item

Note Two calls to RingbufferReceiveFromISR() are required if the bytes wrap around the end of the ring buffer.

Return

- Pointer to the retrieved item on success; *pxItemSize filled with the length of the item.
- NULL when the ring buffer is empty, *pxItemSize is untouched in that case.

Parameters

- `[in] xRingbuffer`: Ring buffer to retrieve the item from
- `[out] pxItemSize`: Pointer to a variable to which the size of the retrieved item will be written.

BaseType_t **`xRingbufferReceiveSplit`**(*RingbufHandle_t xRingbuffer*, void **ppvHeadItem*, void **ppvTailItem*, size_t *pxHeadItemSize*, size_t *pxTailItemSize*, TickType_t *xTicksToWait*)

Retrieve a split item from an allow-split ring buffer.

Attempt to retrieve a split item from an allow-split ring buffer. If the item is not split, only a single item is retried. If the item is split, both parts will be retrieved. This function will block until an item is available or until it times out.

Note Call(s) to vRingbufferReturnItem() is required after this to free up the item(s) retrieved.
Note This function should only be called on allow-split buffers
Return

- pdTRUE if an item (split or unsplit) was retrieved
- pdFALSE when no item was retrieved

Parameters

- `[in] xRingbuffer`: Ring buffer to retrieve the item from
- `[out] ppvHeadItem`: Double pointer to first part (set to NULL if no items were retrieved)
- `[out] ppvTailItem`: Double pointer to second part (set to NULL if item is not split)
- `[out] pxHeadItemSize`: Pointer to size of first part (unmodified if no items were retrieved)
- `[out] pxTailItemSize`: Pointer to size of second part (unmodified if item is not split)
- `[in] xTicksToWait`: Ticks to wait for items in the ring buffer.

BaseType_t **`xRingbufferReceiveSplitFromISR`**(*RingbufHandle_t xRingbuffer*, void **ppvHeadItem*, void **ppvTailItem*, size_t *pxHeadItemSize*, size_t *pxTailItemSize*)

Retrieve a split item from an allow-split ring buffer in an ISR.

Attempt to retrieve a split item from an allow-split ring buffer. If the item is not split, only a single item is retried. If the item is split, both parts will be retrieved. This function returns immediately if there are no items available for retrieval

Note Calls to vRingbufferReturnItemFromISR() is required after this to free up the item(s) retrieved.
Note This function should only be called on allow-split buffers
Return

- pdTRUE if an item (split or unsplit) was retrieved
- pdFALSE when no item was retrieved

Parameters

- `[in] xRingbuffer`: Ring buffer to retrieve the item from
- `[out] ppvHeadItem`: Double pointer to first part (set to NULL if no items were retrieved)
- `[out] ppvTailItem`: Double pointer to second part (set to NULL if item is not split)
- `[out] pxHeadItemSize`: Pointer to size of first part (unmodified if no items were retrieved)
- `[out] pxTailItemSize`: Pointer to size of second part (unmodified if item is not split)

void ***`xRingbufferReceiveUpTo`**(*RingbufHandle_t xRingbuffer*, size_t **pxItemSize*, TickType_t *xTicksToWait*, size_t *xMaxSize*)

Retrieve bytes from a byte buffer, specifying the maximum amount of bytes to retrieve.

Attempt to retrieve data from a byte buffer whilst specifying a maximum number of bytes to retrieve. This function will block until there is data available for retrieval or until it times out.

Note A call to vRingbufferReturnItem() is required after this to free up the data retrieved.
Note This function should only be called on byte buffers
Note Byte buffers do not allow multiple retrievals before returning an item
Note Two calls to RingbufferReceiveUpTo() are required if the bytes wrap around the end of the ring buffer.
Return

- Pointer to the retrieved item on success; *pxItemSize filled with the length of the item.
- NULL on timeout, *pxItemSize is untouched in that case.

Parameters

- `[in] xRingbuffer`: Ring buffer to retrieve the item from

- `[out] pxItemSize`: Pointer to a variable to which the size of the retrieved item will be written.
- `[in] xTicksToWait`: Ticks to wait for items in the ring buffer.
- `[in] xMaxSize`: Maximum number of bytes to return.

void ***xRingbufferReceiveUpToFromISR**(*RingbufHandle_t xRingbuffer*, size_t **pxItemSize*, size_t *xMaxSize*)

Retrieve bytes from a byte buffer, specifying the maximum amount of bytes to retrieve. Call this from an ISR.

Attempt to retrieve bytes from a byte buffer whilst specifying a maximum number of bytes to retrieve. This function will return immediately if there is no data available for retrieval.

Note A call to vRingbufferReturnItemFromISR() is required after this to free up the data received.
Note This function should only be called on byte buffers
Note Byte buffers do not allow multiple retrievals before returning an item
Return

- Pointer to the retrieved item on success; *pxItemSize filled with the length of the item.
- NULL when the ring buffer is empty, *pxItemSize is untouched in that case.

Parameters

- `[in] xRingbuffer`: Ring buffer to retrieve the item from
- `[out] pxItemSize`: Pointer to a variable to which the size of the retrieved item will be written.
- `[in] xMaxSize`: Maximum number of bytes to return.

void **vRingbufferReturnItem**(*RingbufHandle_t xRingbuffer*, void **pvItem*)

Return a previously-retrieved item to the ring buffer.

Note If a split item is retrieved, both parts should be returned by calling this function twice
Parameters

- `[in] xRingbuffer`: Ring buffer the item was retrieved from
- `[in] pvItem`: Item that was received earlier

void **vRingbufferReturnItemFromISR**(*RingbufHandle_t xRingbuffer*, void **pvItem*, BaseType_t **pxHigherPriorityTaskWoken*)

Return a previously-retrieved item to the ring buffer from an ISR.

Note If a split item is retrieved, both parts should be returned by calling this function twice
Parameters

- `[in] xRingbuffer`: Ring buffer the item was retrieved from
- `[in] pvItem`: Item that was received earlier
- `[out] pxHigherPriorityTaskWoken`: Value pointed to will be set to pdTRUE if the function woke up a higher priority task.

void **vRingbufferDelete**(*RingbufHandle_t xRingbuffer*)

Delete a ring buffer.

Note This function will not deallocate any memory if the ring buffer was created using xRingbufferCreateStatic(). Deallocation must be done manually be the user.
Parameters

- `[in] xRingbuffer`: Ring buffer to delete

size_t **xRingbufferGetMaxItemSize**(*RingbufHandle_t xRingbuffer*)

Get maximum size of an item that can be placed in the ring buffer.

This function returns the maximum size an item can have if it was placed in an empty ring buffer.

Note The max item size for a no-split buffer is limited to ((buffer_size/2)-header_size). This limit is imposed so that an item of max item size can always be sent to the an empty no-split buffer regardless of the internal positions of the buffer's read/write/free pointers.
Return Maximum size, in bytes, of an item that can be placed in a ring buffer.
Parameters

- `[in] xRingbuffer`: Ring buffer to query

size_t **xRingbufferGetCurFreeSize**(*RingbufHandle_t xRingbuffer*)

Get current free size available for an item/data in the buffer.

This gives the real time free space available for an item/data in the ring buffer. This represents the maximum size an item/data can have if it was currently sent to the ring buffer.

Warning This API is not thread safe. So, if multiple threads are accessing the same ring buffer, it is the application's responsibility to ensure atomic access to this API and the subsequent Send

Note An empty no-split buffer has a max current free size for an item that is limited to ((buffer_size/2)-header_size). See API reference for xRingbufferGetMaxItemSize().

Return Current free size, in bytes, available for an entry

Parameters

- `[in] xRingbuffer`: Ring buffer to query

BaseType_t **xRingbufferAddToQueueSetRead**(*RingbufHandle_t xRingbuffer*, *QueueSetHandle_t xQueueSet*)

Add the ring buffer's read semaphore to a queue set.

The ring buffer's read semaphore indicates that data has been written to the ring buffer. This function adds the ring buffer's read semaphore to a queue set.

Return

- pdTRUE on success, pdFALSE otherwise

Parameters

- `[in] xRingbuffer`: Ring buffer to add to the queue set
- `[in] xQueueSet`: Queue set to add the ring buffer's read semaphore to

BaseType_t **xRingbufferCanRead**(*RingbufHandle_t xRingbuffer*, *QueueSetMemberHandle_t xMember*)

Check if the selected queue set member is the ring buffer's read semaphore.

This API checks if queue set member returned from xQueueSelectFromSet() is the read semaphore of this ring buffer. If so, this indicates the ring buffer has items waiting to be retrieved.

Return

- pdTRUE when semaphore belongs to ring buffer
- pdFALSE otherwise.

Parameters

- `[in] xRingbuffer`: Ring buffer which should be checked
- `[in] xMember`: Member returned from xQueueSelectFromSet

BaseType_t **xRingbufferRemoveFromQueueSetRead**(*RingbufHandle_t xRingbuffer*, *QueueSetHandle_t xQueueSet*)

Remove the ring buffer's read semaphore from a queue set.

This specifically removes a ring buffer's read semaphore from a queue set. The read semaphore is used to indicate when data has been written to the ring buffer

Return

- pdTRUE on success
- pdFALSE otherwise

Parameters

- `[in] xRingbuffer`: Ring buffer to remove from the queue set
- `[in] xQueueSet`: Queue set to remove the ring buffer's read semaphore from

void **vRingbufferGetInfo**(*RingbufHandle_t xRingbuffer*, UBaseType_t **uxFree*, UBaseType_t **uxRead*, UBaseType_t **uxWrite*, UBaseType_t **uxAcquire*, UBaseType_t **uxItemsWaiting*)

Get information about ring buffer status.

Get information of the a ring buffer's current status such as free/read/write pointer positions, and number of items waiting to be retrieved. Arguments can be set to NULL if they are not required.

Parameters

- `[in] xRingbuffer`: Ring buffer to remove from the queue set
- `[out] uxFree`: Pointer use to store free pointer position
- `[out] uxRead`: Pointer use to store read pointer position
- `[out] uxWrite`: Pointer use to store write pointer position

- `[out] uxAcquire`: Pointer use to store acquire pointer position
- `[out] uxItemsWaiting`: Pointer use to store number of items (bytes for byte buffer) waiting to be retrieved

void **xRingbufferPrintInfo**(*RingbufHandle_t xRingbuffer*)

Debugging function to print the internal pointers in the ring buffer.

Parameters

- `xRingbuffer`: Ring buffer to show

Structures

struct xSTATIC_RINGBUFFER

Struct that is equivalent in size to the ring buffer's data structure.

The contents of this struct are not meant to be used directly. This structure is meant to be used when creating a statically allocated ring buffer where this struct is of the exact size required to store a ring buffer's control data structure.

Type Definitions

typedef void ***RingbufHandle_t**

Type by which ring buffers are referenced. For example, a call to xRingbufferCreate() returns a RingbufHandle_t variable that can then be used as a parameter to xRingbufferSend(), xRingbufferReceive(), etc.

typedef struct *xSTATIC_RINGBUFFER* **StaticRingbuffer_t**

Struct that is equivalent in size to the ring buffer's data structure.

The contents of this struct are not meant to be used directly. This structure is meant to be used when creating a statically allocated ring buffer where this struct is of the exact size required to store a ring buffer's control data structure.

Enumerations

enum RingbufferType_t

Values:

RINGBUF_TYPE_NOSPLIT = 0

No-split buffers will only store an item in contiguous memory and will never split an item. Each item requires an 8 byte overhead for a header and will always internally occupy a 32-bit aligned size of space.

RINGBUF_TYPE_ALLOWSPLIT

Allow-split buffers will split an item into two parts if necessary in order to store it. Each item requires an 8 byte overhead for a header, splitting incurs an extra header. Each item will always internally occupy a 32-bit aligned size of space.

RINGBUF_TYPE_BYTEBUF

Byte buffers store data as a sequence of bytes and do not maintain separate items, therefore byte buffers have no overhead. All data is stored as a sequence of byte and any number of bytes can be sent or retrieved each time.

RINGBUF_TYPE_MAX

Hooks

FreeRTOS consists of Idle Hooks and Tick Hooks which allow for application specific functionality to be added to the Idle Task and Tick Interrupt. ESP-IDF provides its own Idle and Tick Hook API in addition to the hooks provided by Vanilla FreeRTOS. ESP-IDF hooks have the added benefit of being run time configurable and asymmetrical.

Vanilla FreeRTOS Hooks Idle and Tick Hooks in vanilla FreeRTOS are implemented by the user defining the functions `vApplicationIdleHook()` and `vApplicationTickHook()` respectively somewhere in the application. Vanilla FreeRTOS will run the user defined Idle Hook and Tick Hook on every iteration of the Idle Task and Tick Interrupt respectively.

Vanilla FreeRTOS hooks are referred to as **Legacy Hooks** in ESP-IDF FreeRTOS. To enable legacy hooks, *CONFIG_FREERTOS_LEGACY_HOOKS* should be enabled in *project configuration menu*.

Due to vanilla FreeRTOS being designed for single core, `vApplicationIdleHook()` and `vApplicationTickHook()` can only be defined once. However, the ESP32 is dual core in nature, therefore same Idle Hook and Tick Hook are used for both cores (in other words, the hooks are symmetrical for both cores).

In a dual core system, `vApplicationTickHook()` must be located in IRAM (for example by adding the IRAM_ATTR attribute).

ESP-IDF Idle and Tick Hooks Due to the the dual core nature of the ESP32, it may be necessary for some applications to have separate hooks for each core. Furthermore, it may be necessary for the Idle Tasks or Tick Interrupts to execute multiple hooks that are configurable at run time. Therefore the ESP-IDF provides it's own hooks API in addition to the legacy hooks provided by Vanilla FreeRTOS.

The ESP-IDF tick/idle hooks are registered at run time, and each tick/idle hook must be registered to a specific CPU. When the idle task runs/tick Interrupt occurs on a particular CPU, the CPU will run each of its registered idle/tick hooks in turn.

Hooks API Reference

Header File

- esp_common/include/esp_freertos_hooks.h

Functions

esp_err_t **esp_register_freertos_idle_hook_for_cpu**(*esp_freertos_idle_cb_t new_idle_cb*, UBaseType_t *cpuid*)

Register a callback to be called from the specified core's idle hook. The callback should return true if it should be called by the idle hook once per interrupt (or FreeRTOS tick), and return false if it should be called repeatedly as fast as possible by the idle hook.

Warning Idle callbacks MUST NOT, UNDER ANY CIRCUMSTANCES, CALL A FUNCTION THAT MIGHT BLOCK.

Return

- ESP_OK: Callback registered to the specified core's idle hook
- ESP_ERR_NO_MEM: No more space on the specified core's idle hook to register callback
- ESP_ERR_INVALID_ARG: cpuid is invalid

Parameters

- `[in] new_idle_cb`: Callback to be called
- `[in] cpuid`: id of the core

esp_err_t **esp_register_freertos_idle_hook**(*esp_freertos_idle_cb_t new_idle_cb*)

Register a callback to the idle hook of the core that calls this function. The callback should return true if it should be called by the idle hook once per interrupt (or FreeRTOS tick), and return false if it should be called repeatedly as fast as possible by the idle hook.

Warning Idle callbacks MUST NOT, UNDER ANY CIRCUMSTANCES, CALL A FUNCTION THAT MIGHT BLOCK.

Return

- ESP_OK: Callback registered to the calling core's idle hook
- ESP_ERR_NO_MEM: No more space on the calling core's idle hook to register callback

Parameters

- `[in] new_idle_cb`: Callback to be called

esp_err_t **esp_register_freertos_tick_hook_for_cpu**(*esp_freertos_tick_cb_t new_tick_cb*, UBaseType_t *cpuid*)

Register a callback to be called from the specified core's tick hook.

Return

- ESP_OK: Callback registered to specified core's tick hook

- ESP_ERR_NO_MEM: No more space on the specified core’s tick hook to register the callback
- ESP_ERR_INVALID_ARG: cpuid is invalid

Parameters

- `[in] new_tick_cb`: Callback to be called
- `[in] cpuid`: id of the core

esp_err_t **esp_register_freertos_tick_hook**(*esp_freertos_tick_cb_t new_tick_cb*)

Register a callback to be called from the calling core’s tick hook.

Return

- ESP_OK: Callback registered to the calling core’s tick hook
- ESP_ERR_NO_MEM: No more space on the calling core’s tick hook to register the callback

Parameters

- `[in] new_tick_cb`: Callback to be called

void **esp_deregister_freertos_idle_hook_for_cpu**(*esp_freertos_idle_cb_t old_idle_cb*, UBaseType_t *cpuid*)

Unregister an idle callback from the idle hook of the specified core.

Parameters

- `[in] old_idle_cb`: Callback to be unregistered
- `[in] cpuid`: id of the core

void **esp_deregister_freertos_idle_hook**(*esp_freertos_idle_cb_t old_idle_cb*)

Unregister an idle callback. If the idle callback is registered to the idle hooks of both cores, the idle hook will be unregistered from both cores.

Parameters

- `[in] old_idle_cb`: Callback to be unregistered

void **esp_deregister_freertos_tick_hook_for_cpu**(*esp_freertos_tick_cb_t old_tick_cb*, UBaseType_t *cpuid*)

Unregister a tick callback from the tick hook of the specified core.

Parameters

- `[in] old_tick_cb`: Callback to be unregistered
- `[in] cpuid`: id of the core

void **esp_deregister_freertos_tick_hook**(*esp_freertos_tick_cb_t old_tick_cb*)

Unregister a tick callback. If the tick callback is registered to the tick hooks of both cores, the tick hook will be unregistered from both cores.

Parameters

- `[in] old_tick_cb`: Callback to be unregistered

Type Definitions

typedef bool (***esp_freertos_idle_cb_t**)(void)

typedef void (***esp_freertos_tick_cb_t**)(void)

Component Specific Properties

Besides standart component variables that could be gotten with basic cmake build properties FreeRTOS component also provides an arguments (only one so far) for simpler integration with other modules:

- *ORIG_INCLUDE_PATH* - contains an absolute path to freertos root include folder. Thus instead of *#include “freertos/FreeRTOS.h”* you can refer to headers directly: *#include “FreeRTOS.h”*.

2.7.12 Heap Memory Allocation

Stack and Heap

ESP-IDF applications use the common computer architecture patterns of *stack* (dynamic memory allocated by program control flow) and *heap* (dynamic memory allocated by function calls), as well as statically allocated memory (allocated at compile time).

Because ESP-IDF is a multi-threaded RTOS environment, each RTOS task has its own stack. By default, each of these stacks is allocated from the heap when the task is created. (See `xTaskCreateStatic()` for the alternative where stacks are statically allocated.)

Because ESP32 uses multiple types of RAM, it also contains multiple heaps with different capabilities. A capabilities-based memory allocator allows apps to make heap allocations for different purposes.

For most purposes, the standard libc `malloc()` and `free()` functions can be used for heap allocation without any special consideration.

However, in order to fully make use of all of the memory types and their characteristics, ESP-IDF also has a capabilities-based heap memory allocator. If you want to have memory with certain properties (for example, *DMA-Capable Memory* or executable-memory), you can create an OR-mask of the required capabilities and pass that to `heap_caps_malloc()`.

Memory Capabilities

The ESP32 contains multiple types of RAM:

- DRAM (Data RAM) is memory used to hold data. This is the most common kind of memory accessed as heap.
- IRAM (Instruction RAM) usually holds executable data only. If accessed as generic memory, all accesses must be *32-bit aligned*.
- D/IRAM is RAM which can be used as either Instruction or Data RAM.

For more details on these internal memory types, see *应用程序的内存布局*.

It's also possible to connect external SPI RAM to the ESP32 - *external RAM* can be integrated into the ESP32's memory map using the flash cache, and accessed similarly to DRAM.

DRAM uses capability `MALLOC_CAP_8BIT` (accessible in single byte reads and writes). When calling `malloc()`, the ESP-IDF `malloc()` implementation internally calls `heap_caps_malloc(size, MALLOC_CAP_8BIT)` in order to allocate DRAM that is byte-addressable. To test the free DRAM heap size at runtime, call cpp:func:*heap_caps_get_free_size(MALLOC_CAP_8BIT)*.

Because malloc uses the capabilities-based allocation system, memory allocated using `heap_caps_malloc()` can be freed by calling the standard `free()` function.

Available Heap

DRAM At startup, the DRAM heap contains all data memory which is not statically allocated by the app. Reducing statically allocated buffers will increase the amount of available free heap.

To find the amount of statically allocated memory, use the *idf.py size* command.

注解: Due to a technical limitation, the maximum statically allocated DRAM usage is 160KB. The remaining 160KB (for a total of 320KB of DRAM) can only be allocated at runtime as heap.

注解: At runtime, the available heap DRAM may be less than calculated at compile time, because at startup some memory is allocated from the heap before the FreeRTOS scheduler is started (including memory for the stacks of initial FreeRTOS tasks).

IRAM At startup, the IRAM heap contains all instruction memory which is not used by the app executable code.

The *idf.py size* command can be used to find the amount of IRAM used by the app.

D/IRAM Some memory in the ESP32 is available as either DRAM or IRAM. If memory is allocated from a D/IRAM region, the free heap size for both types of memory will decrease.

Heap Sizes At startup, all ESP-IDF apps log a summary of all heap addresses (and sizes) at level Info:

```
I (252) heap_init: Initializing. RAM available for dynamic allocation:
I (259) heap_init: At 3FFAE6E0 len 00001920 (6 KiB): DRAM
I (265) heap_init: At 3FFB2EC8 len 0002D138 (180 KiB): DRAM
I (272) heap_init: At 3FFE0440 len 00003AE0 (14 KiB): D/IRAM
I (278) heap_init: At 3FFE4350 len 0001BCB0 (111 KiB): D/IRAM
I (284) heap_init: At 4008944C len 00016BB4 (90 KiB): IRAM
```

Finding available heap See *Heap Information*.

Special Capabilities

DMA-Capable Memory Use the `MALLOC_CAP_DMA` flag to allocate memory which is suitable for use with hardware DMA engines (for example SPI and I2S). This capability flag excludes any external PSRAM.

32-Bit Accessible Memory If a certain memory structure is only addressed in 32-bit units, for example an array of ints or pointers, it can be useful to allocate it with the `MALLOC_CAP_32BIT` flag. This also allows the allocator to give out IRAM memory; something which it can't do for a normal malloc() call. This can help to use all the available memory in the ESP32.

Memory allocated with `MALLOC_CAP_32BIT` can *only* be accessed via 32-bit reads and writes, any other type of access will generate a fatal LoadStoreError exception.

External SPI Memory When *external RAM* is enabled, external SPI RAM under 4MiB in size can be allocated using standard `malloc` calls, or via `heap_caps_malloc(MALLOC_CAP_SPIRAM)`, depending on configuration. See 配置片外 *RAM* for more details.

To use the region above the 4MiB limit, you can use the *himem API*.

API Reference - Heap Allocation

Header File

- heap/include/esp_heap_caps.h

Functions

esp_err_t **heap_caps_register_failed_alloc_callback**(*esp_alloc_failed_hook_t callback*)

registers a callback function to be invoked if a memory allocation operation fails

Return ESP_OK if callback was registered.

Parameters

- `callback`: caller defined callback to be invoked

void ***heap_caps_malloc**(size_t *size*, uint32_t *caps*)

Allocate a chunk of memory which has the given capabilities.

Equivalent semantics to libc malloc(), for capability-aware memory.

In IDF, `malloc(p)` is equivalent to `heap_caps_malloc(p, MALLOC_CAP_8BIT)`.

Return A pointer to the memory allocated on success, NULL on failure
Parameters
- `size`: Size, in bytes, of the amount of memory to allocate
- `caps`: Bitwise OR of MALLOC_CAP_* flags indicating the type of memory to be returned

void **heap_caps_free**(void *_ptr_)
Free memory previously allocated via heap_caps_malloc() or heap_caps_realloc().

Equivalent semantics to libc free(), for capability-aware memory.

In IDF, `free(p)` is equivalent to `heap_caps_free(p)`.

Parameters
- `ptr`: Pointer to memory previously returned from heap_caps_malloc() or heap_caps_realloc(). Can be NULL.

void ***heap_caps_realloc**(void *_ptr_, size_t _size_, uint32_t _caps_)
Reallocate memory previously allocated via heap_caps_malloc() or heap_caps_realloc().

Equivalent semantics to libc realloc(), for capability-aware memory.

In IDF, `realloc(p, s)` is equivalent to `heap_caps_realloc(p, s, MALLOC_CAP_8BIT)`.

‘caps’ parameter can be different to the capabilities that any original ‘ptr’ was allocated with. In this way, realloc can be used to “move” a buffer if necessary to ensure it meets a new set of capabilities.

Return Pointer to a new buffer of size ‘size’ with capabilities ‘caps’, or NULL if allocation failed.
Parameters
- `ptr`: Pointer to previously allocated memory, or NULL for a new allocation.
- `size`: Size of the new buffer requested, or 0 to free the buffer.
- `caps`: Bitwise OR of MALLOC_CAP_* flags indicating the type of memory desired for the new allocation.

void ***heap_caps_aligned_alloc**(size_t _alignment_, size_t _size_, uint32_t _caps_)
Allocate a aligned chunk of memory which has the given capabilities.

Equivalent semantics to libc aligned_alloc(), for capability-aware memory.

Return A pointer to the memory allocated on success, NULL on failure
Parameters
- `alignment`: How the pointer received needs to be aligned must be a power of two
- `size`: Size, in bytes, of the amount of memory to allocate
- `caps`: Bitwise OR of MALLOC_CAP_* flags indicating the type of memory to be returned

void **heap_caps_aligned_free**(void *_ptr_)
Used to deallocate memory previously allocated with heap_caps_aligned_alloc.

Note This function is deprecated, plase consider using heap_caps_free() instead
Parameters
- `ptr`: Pointer to the memory allocated

void ***heap_caps_aligned_calloc**(size_t _alignment_, size_t _n_, size_t _size_, uint32_t _caps_)
Allocate a aligned chunk of memory which has the given capabilities. The initialized value in the memory is set to zero.

Return A pointer to the memory allocated on success, NULL on failure
Parameters
- `alignment`: How the pointer received needs to be aligned must be a power of two
- `n`: Number of continuing chunks of memory to allocate
- `size`: Size, in bytes, of a chunk of memory to allocate
- `caps`: Bitwise OR of MALLOC_CAP_* flags indicating the type of memory to be returned

void ***heap_caps_calloc**(size_t _n_, size_t _size_, uint32_t _caps_)
Allocate a chunk of memory which has the given capabilities. The initialized value in the memory is set to zero.

Equivalent semantics to libc calloc(), for capability-aware memory.

In IDF, `calloc(p)` is equivalent to `heap_caps_calloc(p, MALLOC_CAP_8BIT)`.

Return A pointer to the memory allocated on success, NULL on failure
Parameters
- `n`: Number of continuing chunks of memory to allocate
- `size`: Size, in bytes, of a chunk of memory to allocate
- `caps`: Bitwise OR of MALLOC_CAP_* flags indicating the type of memory to be returned

size_t **heap_caps_get_total_size**(uint32_t *caps*)
Get the total size of all the regions that have the given capabilities.

This function takes all regions capable of having the given capabilities allocated in them and adds up the total space they have.

Return total size in bytes
Parameters
- `caps`: Bitwise OR of MALLOC_CAP_* flags indicating the type of memory

size_t **heap_caps_get_free_size**(uint32_t *caps*)
Get the total free size of all the regions that have the given capabilities.

This function takes all regions capable of having the given capabilities allocated in them and adds up the free space they have.

Note that because of heap fragmentation it is probably not possible to allocate a single block of memory of this size. Use heap_caps_get_largest_free_block() for this purpose.

Return Amount of free bytes in the regions
Parameters
- `caps`: Bitwise OR of MALLOC_CAP_* flags indicating the type of memory

size_t **heap_caps_get_minimum_free_size**(uint32_t *caps*)
Get the total minimum free memory of all regions with the given capabilities.

This adds all the low water marks of the regions capable of delivering the memory with the given capabilities.

Note the result may be less than the global all-time minimum available heap of this kind, as "low water marks" are tracked per-region. Individual regions' heaps may have reached their "low water marks" at different points in time. However this result still gives a "worst case" indication for all-time minimum free heap.

Return Amount of free bytes in the regions
Parameters
- `caps`: Bitwise OR of MALLOC_CAP_* flags indicating the type of memory

size_t **heap_caps_get_largest_free_block**(uint32_t *caps*)
Get the largest free block of memory able to be allocated with the given capabilities.

Returns the largest value of `s` for which `heap_caps_malloc(s, caps)` will succeed.

Return Size of largest free block in bytes.
Parameters
- `caps`: Bitwise OR of MALLOC_CAP_* flags indicating the type of memory

void **heap_caps_get_info**(*multi_heap_info_t* **info*, uint32_t *caps*)
Get heap info for all regions with the given capabilities.

Calls multi_heap_info() on all heaps which share the given capabilities. The information returned is an aggregate across all matching heaps. The meanings of fields are the same as defined for *multi_heap_info_t*, except that `minimum_free_bytes` has the same caveats described in heap_caps_get_minimum_free_size().

Parameters
- `info`: Pointer to a structure which will be filled with relevant heap metadata.
- `caps`: Bitwise OR of MALLOC_CAP_* flags indicating the type of memory

void **heap_caps_print_heap_info**(uint32_t *caps*)
Print a summary of all memory with the given capabilities.

Calls multi_heap_info on all heaps which share the given capabilities, and prints a two-line summary for each, then a total summary.

Parameters

- `caps`: Bitwise OR of MALLOC_CAP_* flags indicating the type of memory

bool **heap_caps_check_integrity_all**(bool *print_errors*)

Check integrity of all heap memory in the system.

Calls multi_heap_check on all heaps. Optionally print errors if heaps are corrupt.

Calling this function is equivalent to calling heap_caps_check_integrity with the caps argument set to MALLOC_CAP_INVALID.

Return True if all heaps are valid, False if at least one heap is corrupt.

Parameters

- `print_errors`: Print specific errors if heap corruption is found.

bool **heap_caps_check_integrity**(uint32_t *caps*, bool *print_errors*)

Check integrity of all heaps with the given capabilities.

Calls multi_heap_check on all heaps which share the given capabilities. Optionally print errors if the heaps are corrupt.

See also heap_caps_check_integrity_all to check all heap memory in the system and heap_caps_check_integrity_addr to check memory around a single address.

Return True if all heaps are valid, False if at least one heap is corrupt.

Parameters

- `caps`: Bitwise OR of MALLOC_CAP_* flags indicating the type of memory
- `print_errors`: Print specific errors if heap corruption is found.

bool **heap_caps_check_integrity_addr**(intptr_t *addr*, bool *print_errors*)

Check integrity of heap memory around a given address.

This function can be used to check the integrity of a single region of heap memory, which contains the given address.

This can be useful if debugging heap integrity for corruption at a known address, as it has a lower overhead than checking all heap regions. Note that if the corrupt address moves around between runs (due to timing or other factors) then this approach won't work and you should call heap_caps_check_integrity or heap_caps_check_integrity_all instead.

Note The entire heap region around the address is checked, not only the adjacent heap blocks.

Return True if the heap containing the specified address is valid, False if at least one heap is corrupt or the address doesn't belong to a heap region.

Parameters

- `addr`: Address in memory. Check for corruption in region containing this address.
- `print_errors`: Print specific errors if heap corruption is found.

void **heap_caps_malloc_extmem_enable**(size_t *limit*)

Enable malloc() in external memory and set limit below which malloc() attempts are placed in internal memory.

When external memory is in use, the allocation strategy is to initially try to satisfy smaller allocation requests with internal memory and larger requests with external memory. This sets the limit between the two, as well as generally enabling allocation in external memory.

Parameters

- `limit`: Limit, in bytes.

void ***heap_caps_malloc_prefer**(size_t *size*, size_t *num*, ...)

Allocate a chunk of memory as preference in decreasing order.

Attention The variable parameters are bitwise OR of MALLOC_CAP_* flags indicating the type of memory. This API prefers to allocate memory with the first parameter. If failed, allocate memory with the next parameter. It will try in this order until allocating a chunk of memory successfully or fail to allocate memories with any of the parameters.

Return A pointer to the memory allocated on success, NULL on failure
Parameters
- `size`: Size, in bytes, of the amount of memory to allocate
- `num`: Number of variable paramters

void ***heap_caps_realloc_prefer**(void **ptr*, size_t *size*, size_t *num*, ...)
Allocate a chunk of memory as preference in decreasing order.

Return Pointer to a new buffer of size ‘size’, or NULL if allocation failed.
Parameters
- `ptr`: Pointer to previously allocated memory, or NULL for a new allocation.
- `size`: Size of the new buffer requested, or 0 to free the buffer.
- `num`: Number of variable paramters

void ***heap_caps_calloc_prefer**(size_t *n*, size_t *size*, size_t *num*, ...)
Allocate a chunk of memory as preference in decreasing order.

Return A pointer to the memory allocated on success, NULL on failure
Parameters
- `n`: Number of continuing chunks of memory to allocate
- `size`: Size, in bytes, of a chunk of memory to allocate
- `num`: Number of variable paramters

void **heap_caps_dump**(uint32_t *caps*)
Dump the full structure of all heaps with matching capabilities.

Prints a large amount of output to serial (because of locking limitations, the output bypasses stdout/stderr). For each (variable sized) block in each matching heap, the following output is printed on a single line:

- Block address (the data buffer returned by malloc is 4 bytes after this if heap debugging is set to Basic, or 8 bytes otherwise).
- Data size (the data size may be larger than the size requested by malloc, either due to heap fragmentation or because of heap debugging level).
- Address of next block in the heap.
- If the block is free, the address of the next free block is also printed.

Parameters
- `caps`: Bitwise OR of MALLOC_CAP_* flags indicating the type of memory

void **heap_caps_dump_all**(void)
Dump the full structure of all heaps.

Covers all registered heaps. Prints a large amount of output to serial.

Output is the same as for heap_caps_dump.

size_t **heap_caps_get_allocated_size**(void **ptr*)
Return the size that a particular pointer was allocated with.

Note The app will crash with an assertion failure if the pointer is not valid.
Return Size of the memory allocated at this block.
Parameters
- `ptr`: Pointer to currently allocated heap memory. Must be a pointer value previously returned by heap_caps_malloc,malloc,calloc, etc. and not yet freed.

Macros

MALLOC_CAP_EXEC
Flags to indicate the capabilities of the various memory systems.

Memory must be able to run executable code

MALLOC_CAP_32BIT
Memory must allow for aligned 32-bit data accesses.

MALLOC_CAP_8BIT
Memory must allow for 8/16/…-bit data accesses.

MALLOC_CAP_DMA
Memory must be able to accessed by DMA.

MALLOC_CAP_PID2
Memory must be mapped to PID2 memory space (PIDs are not currently used)

MALLOC_CAP_PID3
Memory must be mapped to PID3 memory space (PIDs are not currently used)

MALLOC_CAP_PID4
Memory must be mapped to PID4 memory space (PIDs are not currently used)

MALLOC_CAP_PID5
Memory must be mapped to PID5 memory space (PIDs are not currently used)

MALLOC_CAP_PID6
Memory must be mapped to PID6 memory space (PIDs are not currently used)

MALLOC_CAP_PID7
Memory must be mapped to PID7 memory space (PIDs are not currently used)

MALLOC_CAP_SPIRAM
Memory must be in SPI RAM.

MALLOC_CAP_INTERNAL
Memory must be internal; specifically it should not disappear when flash/spiram cache is switched off.

MALLOC_CAP_DEFAULT
Memory can be returned in a non-capability-specific memory allocation (e.g. malloc(), calloc()) call.

MALLOC_CAP_IRAM_8BIT
Memory must be in IRAM and allow unaligned access.

MALLOC_CAP_RETENTION

MALLOC_CAP_INVALID
Memory can't be used / list end marker.

Type Definitions

typedef void (***esp_alloc_failed_hook_t**)(size_t size, uint32_t caps, **const** char *function_name)
callback called when a allocation operation fails, if registered

Parameters

- `size`: in bytes of failed allocation
- `caps`: capabillites requested of failed allocation
- `function_name`: function which generated the failure

Thread Safety Heap functions are thread safe, meaning they can be called from different tasks simultaneously without any limitations.

It is technically possible to call `malloc`, `free`, and related functions from interrupt handler (ISR) context (see *Calling heap related functions from ISR*). However this is not recommended, as heap function calls may delay other interrupts. It is strongly recommended to refactor applications so that any buffers used by an ISR are pre-allocated outside of the ISR. Support for calling heap functions from ISRs may be removed in a future update.

Calling heap related functions from ISR

The following functions from the heap component can be called form interrupt handler (ISR):

- *heap_caps_malloc()*
- `heap_caps_malloc_default()`
- `heap_caps_realloc_default()`
- *heap_caps_malloc_prefer()*

- *heap_caps_realloc_prefer()*
- *heap_caps_calloc_prefer()*
- *heap_caps_free()*
- *heap_caps_realloc()*
- *heap_caps_calloc()*
- *heap_caps_aligned_alloc()*
- *heap_caps_aligned_free()*

Note however this practice is strongly discouraged.

Heap Tracing & Debugging

The following features are documented on the *Heap Memory Debugging* page:

- *Heap Information* (free space, etc.)
- *Heap Corruption Detection*
- *Heap Tracing* (memory leak detection, monitoring, etc.)

API Reference - Initialisation

Header File

- heap/include/esp_heap_caps_init.h

Functions

void **heap_caps_init**(void)

Initialize the capability-aware heap allocator.

This is called once in the IDF startup code. Do not call it at other times.

void **heap_caps_enable_nonos_stack_heaps**(void)

Enable heap(s) in memory regions where the startup stacks are located.

On startup, the pro/app CPUs have a certain memory region they use as stack, so we cannot do allocations in the regions these stack frames are. When FreeRTOS is completely started, they do not use that memory anymore and heap(s) there can be enabled.

esp_err_t **heap_caps_add_region**(intptr_t *start*, intptr_t *end*)

Add a region of memory to the collection of heaps at runtime.

Most memory regions are defined in soc_memory_layout.c for the SoC, and are registered via heap_caps_init(). Some regions can't be used immediately and are later enabled via heap_caps_enable_nonos_stack_heaps().

Call this function to add a region of memory to the heap at some later time.

This function does not consider any of the "reserved" regions or other data in soc_memory_layout, caller needs to consider this themselves.

All memory within the region specified by start & end parameters must be otherwise unused.

The capabilities of the newly registered memory will be determined by the start address, as looked up in the regions specified in soc_memory_layout.c.

Use heap_caps_add_region_with_caps() to register a region with custom capabilities.

Return ESP_OK on success, ESP_ERR_INVALID_ARG if a parameter is invalid, ESP_ERR_NOT_FOUND if the specified start address doesn't reside in a known region, or any error returned by heap_caps_add_region_with_caps().

Parameters

- `start`: Start address of new region.
- `end`: End address of new region.

esp_err_t **heap_caps_add_region_with_caps**(**const** uint32_t *caps*[], intptr_t *start*, intptr_t *end*)
Add a region of memory to the collection of heaps at runtime, with custom capabilities.

Similar to heap_caps_add_region(), only custom memory capabilities are specified by the caller.

Return
- ESP_OK on success
- ESP_ERR_INVALID_ARG if a parameter is invalid
- ESP_ERR_NO_MEM if no memory to register new heap.
- ESP_ERR_INVALID_SIZE if the memory region is too small to fit a heap
- ESP_FAIL if region overlaps the start and/or end of an existing region

Parameters
- `caps`: Ordered array of capability masks for the new region, in order of priority. Must have length SOC_MEMORY_TYPE_NO_PRIOS. Does not need to remain valid after the call returns.
- `start`: Start address of new region.
- `end`: End address of new region.

Implementation Notes

Knowledge about the regions of memory in the chip comes from the "soc" component, which contains memory layout information for the chip, and the different capabilities of each region. Each region's capabilities are prioritised, so that (for example) dedicated DRAM and IRAM regions will be used for allocations ahead of the more versatile D/IRAM regions.

Each contiguous region of memory contains its own memory heap. The heaps are created using the multi_heap functionality. multi_heap allows any contiguous region of memory to be used as a heap.

The heap capabilities allocator uses knowledge of the memory regions to initialize each individual heap. Allocation functions in the heap capabilities API will find the most appropriate heap for the allocation (based on desired capabilities, available space, and preferences for each region's use) and then calling *`multi_heap_malloc()`* or `multi_heap_calloc()` for the heap situated in that particular region.

Calling `free()` involves finding the particular heap corresponding to the freed address, and then calling *`multi_heap_free()`* on that particular multi_heap instance.

API Reference - Multi Heap API

(Note: The multi heap API is used internally by the heap capabilities allocator. Most IDF programs will never need to call this API directly.)

Header File

- heap/include/multi_heap.h

Functions

void ***multi_heap_aligned_alloc**(*multi_heap_handle_t heap*, size_t *size*, size_t *alignment*)
allocate a chunk of memory with specific alignment

Return pointer to the memory allocated, NULL on failure
Parameters
- `heap`: Handle to a registered heap.
- `size`: size in bytes of memory chunk
- `alignment`: how the memory must be aligned

void ***multi_heap_malloc**(*multi_heap_handle_t heap*, size_t *size*)
malloc() a buffer in a given heap

Semantics are the same as standard malloc(), only the returned buffer will be allocated in the specified heap.

Return Pointer to new memory, or NULL if allocation fails.
Parameters

- heap: Handle to a registered heap.
- size: Size of desired buffer.

void **multi_heap_aligned_free**(*multi_heap_handle_t heap*, void *p)

free() a buffer aligned in a given heap.

Note This function is deprecated, consider using multi_heap_free() instead

Parameters

- heap: Handle to a registered heap.
- p: NULL, or a pointer previously returned from multi_heap_aligned_alloc() for the same heap.

void **multi_heap_free**(*multi_heap_handle_t heap*, void *p)

free() a buffer in a given heap.

Semantics are the same as standard free(), only the argument 'p' must be NULL or have been allocated in the specified heap.

Parameters

- heap: Handle to a registered heap.
- p: NULL, or a pointer previously returned from multi_heap_malloc() or multi_heap_realloc() for the same heap.

void ***multi_heap_realloc**(*multi_heap_handle_t heap*, void *p, size_t *size*)

realloc() a buffer in a given heap.

Semantics are the same as standard realloc(), only the argument 'p' must be NULL or have been allocated in the specified heap.

Return New buffer of 'size' containing contents of 'p', or NULL if reallocation failed.

Parameters

- heap: Handle to a registered heap.
- p: NULL, or a pointer previously returned from multi_heap_malloc() or multi_heap_realloc() for the same heap.
- size: Desired new size for buffer.

size_t **multi_heap_get_allocated_size**(*multi_heap_handle_t heap*, void *p)

Return the size that a particular pointer was allocated with.

Return Size of the memory allocated at this block. May be more than the original size argument, due to padding and minimum block sizes.

Parameters

- heap: Handle to a registered heap.
- p: Pointer, must have been previously returned from multi_heap_malloc() or multi_heap_realloc() for the same heap.

multi_heap_handle_t **multi_heap_register**(void *start, size_t *size*)

Register a new heap for use.

This function initialises a heap at the specified address, and returns a handle for future heap operations.

There is no equivalent function for deregistering a heap - if all blocks in the heap are free, you can immediately start using the memory for other purposes.

Return Handle of a new heap ready for use, or NULL if the heap region was too small to be initialised.

Parameters

- start: Start address of the memory to use for a new heap.
- size: Size (in bytes) of the new heap.

void **multi_heap_set_lock**(*multi_heap_handle_t heap*, void *lock)

Associate a private lock pointer with a heap.

The lock argument is supplied to the MULTI_HEAP_LOCK() and MULTI_HEAP_UNLOCK() macros, defined in multi_heap_platform.h.

The lock in question must be recursive.

When the heap is first registered, the associated lock is NULL.

Parameters
- `heap`: Handle to a registered heap.
- `lock`: Optional pointer to a locking structure to associate with this heap.

void **`multi_heap_dump`**(*multi_heap_handle_t heap*)
Dump heap information to stdout.

For debugging purposes, this function dumps information about every block in the heap to stdout.

Parameters
- `heap`: Handle to a registered heap.

bool **`multi_heap_check`**(*multi_heap_handle_t heap*, bool *print_errors*)
Check heap integrity.

Walks the heap and checks all heap data structures are valid. If any errors are detected, an error-specific message can be optionally printed to stderr. Print behaviour can be overriden at compile time by defining MULTI_CHECK_FAIL_PRINTF in multi_heap_platform.h.

Return true if heap is valid, false otherwise.
Parameters
- `heap`: Handle to a registered heap.
- `print_errors`: If true, errors will be printed to stderr.

size_t **`multi_heap_free_size`**(*multi_heap_handle_t heap*)
Return free heap size.

Returns the number of bytes available in the heap.

Equivalent to the total_free_bytes member returned by multi_heap_get_heap_info().

Note that the heap may be fragmented, so the actual maximum size for a single malloc() may be lower. To know this size, see the largest_free_block member returned by multi_heap_get_heap_info().

Return Number of free bytes.
Parameters
- `heap`: Handle to a registered heap.

size_t **`multi_heap_minimum_free_size`**(*multi_heap_handle_t heap*)
Return the lifetime minimum free heap size.

Equivalent to the minimum_free_bytes member returned by multi_heap_get_info().

Returns the lifetime "low water mark" of possible values returned from multi_free_heap_size(), for the specified heap.

Return Number of free bytes.
Parameters
- `heap`: Handle to a registered heap.

void **`multi_heap_get_info`**(*multi_heap_handle_t heap*, *multi_heap_info_t *info*)
Return metadata about a given heap.

Fills a *multi_heap_info_t* structure with information about the specified heap.

Parameters
- `heap`: Handle to a registered heap.
- `info`: Pointer to a structure to fill with heap metadata.

Structures

`struct multi_heap_info_t`
Structure to access heap metadata via multi_heap_get_info.

Public Members

size_t **total_free_bytes**
Total free bytes in the heap. Equivalent to multi_free_heap_size().

size_t **total_allocated_bytes**
Total bytes allocated to data in the heap.

size_t **largest_free_block**
Size of largest free block in the heap. This is the largest malloc-able size.

size_t **minimum_free_bytes**
Lifetime minimum free heap size. Equivalent to multi_minimum_free_heap_size().

size_t **allocated_blocks**
Number of (variable size) blocks allocated in the heap.

size_t **free_blocks**
Number of (variable size) free blocks in the heap.

size_t **total_blocks**
Total number of (variable size) blocks in the heap.

Type Definitions

typedef struct multi_heap_info ***multi_heap_handle_t**
Opaque handle to a registered heap.

2.7.13 Heap Memory Debugging

Overview

ESP-IDF integrates tools for requesting *heap information*, *detecting heap corruption*, and *tracing memory leaks*. These can help track down memory-related bugs.

For general information about the heap memory allocator, see the *Heap Memory Allocation* page.

Heap Information

To obtain information about the state of the heap:

- `xPortGetFreeHeapSize()` is a FreeRTOS function which returns the number of free bytes in the (data memory) heap. This is equivalent to calling `heap_caps_get_free_size(MALLOC_CAP_8BIT)`.
- *`heap_caps_get_free_size()`* can also be used to return the current free memory for different memory capabilities.
- *`heap_caps_get_largest_free_block()`* can be used to return the largest free block in the heap. This is the largest single allocation which is currently possible. Tracking this value and comparing to total free heap allows you to detect heap fragmentation.
- `xPortGetMinimumEverFreeHeapSize()` and the related *`heap_caps_get_minimum_free_size()`* can be used to track the heap "low water mark" since boot.
- *`heap_caps_get_info()`* returns a *`multi_heap_info_t`* structure which contains the information from the above functions, plus some additional heap-specific data (number of allocations, etc.).
- *`heap_caps_print_heap_info()`* prints a summary to stdout of the information returned by *`heap_caps_get_info()`*.
- *`heap_caps_dump()`* and *`heap_caps_dump_all()`* will output detailed information about the structure of each block in the heap. Note that this can be large amount of output.

Heap Corruption Detection

Heap corruption detection allows you to detect various types of heap memory errors:

- Out of bounds writes & buffer overflow.
- Writes to freed memory.
- Reads from freed or uninitialized memory,

Assertions The heap implementation (`multi_heap.c`, etc.) includes a lot of assertions which will fail if the heap memory is corrupted. To detect heap corruption most effectively, ensure that assertions are enabled in the project configuration menu under `Compiler options` -> *CONFIG_COMPILER_OPTIMIZATION_ASSERTION_LEVEL*.

If a heap integrity assertion fails, a line will be printed like `CORRUPT HEAP: multi_heap.c:225 detected at 0x3ffbb71c`. The memory address which is printed is the address of the heap structure which has corrupt content.

It's also possible to manually check heap integrity by calling *`heap_caps_check_integrity_all()`* or related functions. This function checks all of requested heap memory for integrity, and can be used even if assertions are disabled. If the integrity check prints an error, it will also contain the address(es) of corrupt heap structures.

Memory Allocation Failed Hook Users can use *`heap_caps_register_failed_alloc_callback()`* to register a callback that will be invoked every time a allocation operation fails.

Additionaly user can enable a generation of a system abort if allocation operation fails by following the steps below: - In the project configuration menu, navigate to `Component config` -> `Heap Memory Debugging` and select `Abort if memory allocation fails` option (see *CONFIG_HEAP_ABORT_WHEN_ALLOCATION_FAILS*).

The example below show how to register a allocation failure callback:

```
#include "esp_heap_caps.h"

void heap_caps_alloc_failed_hook(size_t requested_size, uint32_t caps, const char␣
↪*function_name)
{
  printf("%s was called but failed to allocate %d bytes with 0x%X capabilities. \n
↪",function_name, requested_size, caps);
}

void app_main()
{
    ...
    esp_err_t error = heap_caps_register_failed_alloc_callback(heap_caps_alloc_
↪failed_hook);
    ...
    void *ptr = heap_caps_malloc(allocation_size, MALLOC_CAP_DEFAULT);
    ...
}
```

Finding Heap Corruption Memory corruption can be one of the hardest classes of bugs to find and fix, as one area of memory can be corrupted from a totally different place. Some tips:

- A crash with a `CORRUPT HEAP:` message will usually include a stack trace, but this stack trace is rarely useful. The crash is the symptom of memory corruption when the system realises the heap is corrupt, but usually the corruption happened elsewhere and earlier in time.
- Increasing the Heap memory debugging *Configuration* level to "Light impact" or "Comprehensive" can give you a more accurate message with the first corrupt memory address.
- Adding regular calls to *`heap_caps_check_integrity_all()`* or *`heap_caps_check_integrity_addr()`* in your code will help you pin down the exact time

that the corruption happened. You can move these checks around to "close in on" the section of code that corrupted the heap.
- Based on the memory address which is being corrupted, you can use *JTAG debugging* to set a watchpoint on this address and have the CPU halt when it is written to.
- If you don't have JTAG, but you do know roughly when the corruption happens, then you can set a watchpoint in software just beforehand via `esp_set_watchpoint()`. A fatal exception will occur when the watchpoint triggers. For example `esp_set_watchpoint(0, (void *)addr, 4, ESP_WATCHPOINT_STORE`. Note that watchpoints are per-CPU and are set on the current running CPU only, so if you don't know which CPU is corrupting memory then you will need to call this function on both CPUs.
- For buffer overflows, *heap tracing* in `HEAP_TRACE_ALL` mode lets you see which callers are allocating which addresses from the heap. See *Heap Tracing To Find Heap Corruption* for more details. If you can find the function which allocates memory with an address immediately before the address which is corrupted, this will probably be the function which overflows the buffer.
- Calling *`heap_caps_dump()`* or *`heap_caps_dump_all()`* can give an indication of what heap blocks are surrounding the corrupted region and may have overflowed/underflowed/etc.

Configuration Temporarily increasing the heap corruption detection level can give more detailed information about heap corruption errors.

In the project configuration menu, under `Component config` there is a menu `Heap memory debugging`. The setting *CONFIG_HEAP_CORRUPTION_DETECTION* can be set to one of three levels:

Basic (no poisoning) This is the default level. No special heap corruption features are enabled, but provided assertions are enabled (the default configuration) then a heap corruption error will be printed if any of the heap's internal data structures appear overwritten or corrupted. This usually indicates a buffer overrun or out of bounds write.

If assertions are enabled, an assertion will also trigger if a double-free occurs (the same memory is freed twice).

Calling *`heap_caps_check_integrity()`* in Basic mode will check the integrity of all heap structures, and print errors if any appear to be corrupted.

Light Impact At this level, heap memory is additionally "poisoned" with head and tail "canary bytes" before and after each block which is allocated. If an application writes outside the bounds of allocated buffers, the canary bytes will be corrupted and the integrity check will fail.

The head canary word is 0xABBA1234 (3412BAAB in byte order), and the tail canary word is 0xBAAD5678 (7856ADBA in byte order).

"Basic" heap corruption checks can also detect most out of bounds writes, but this setting is more precise as even a single byte overrun can be detected. With Basic heap checks, the number of overrun bytes before a failure is detected will depend on the properties of the heap.

Enabling "Light Impact" checking increases memory usage, each individual allocation will use 9 to 12 additional bytes of memory (depending on alignment).

Each time `free()` is called in Light Impact mode, the head and tail canary bytes of the buffer being freed are checked against the expected values.

When *`heap_caps_check_integrity()`* is called, all allocated blocks of heap memory have their canary bytes checked against the expected values.

In both cases, the check is that the first 4 bytes of an allocated block (before the buffer returned to the user) should be the word 0xABBA1234. Then the last 4 bytes of the allocated block (after the buffer returned to the user) should be the word 0xBAAD5678.

Different values usually indicate buffer underrun or overrun, respectively.

Comprehensive This level incorporates the "light impact" detection features plus additional checks for uninitialised-access and use-after-free bugs. In this mode, all freshly allocated memory is filled with the pattern 0xCE, and all freed memory is filled with the pattern 0xFE.

Enabling "Comprehensive" detection has a substantial runtime performance impact (as all memory needs to be set to the allocation patterns each time a malloc/free completes, and the memory also needs to be checked each time.) However it allows easier detection of memory corruption bugs which are much more subtle to find otherwise. It is recommended to only enable this mode when debugging, not in production.

Crashes in Comprehensive Mode If an application crashes reading/writing an address related to 0xCECECECE in Comprehensive mode, this indicates it has read uninitialized memory. The application should be changed to either use calloc() (which zeroes memory), or initialize the memory before using it. The value 0xCECECECE may also be seen in stack-allocated automatic variables, because in IDF most task stacks are originally allocated from the heap and in C stack memory is uninitialized by default.

If an application crashes and the exception register dump indicates that some addresses or values were 0xFEFEFEFE, this indicates it is reading heap memory after it has been freed (a "use after free bug".) The application should be changed to not access heap memory after it has been freed.

If a call to malloc() or realloc() causes a crash because it expected to find the pattern 0xFEFEFEFE in free memory and a different pattern was found, then this indicates the app has a use-after-free bug where it is writing to memory which has already been freed.

Manual Heap Checks in Comprehensive Mode Calls to *heap_caps_check_integrity()* may print errors relating to 0xFEFEFEFE, 0xABBA1234 or 0xBAAD5678. In each case the checker is expecting to find a given pattern, and will error out if this is not found:

- For free heap blocks, the checker expects to find all bytes set to 0xFE. Any other values indicate a use-after-free bug where free memory has been incorrectly overwritten.
- For allocated heap blocks, the behaviour is the same as for *Light Impact* mode. The canary bytes 0xABBA1234 and 0xBAAD5678 are checked at the head and tail of each allocated buffer, and any variation indicates a buffer overrun/underrun.

Heap Task Tracking

Heap Task Tracking can be used to get per task info for heap memory allocation. Application has to specify the heap capabilities for which the heap allocation is to be tracked.

Example code is provided in system/heap_task_tracking

Heap Tracing

Heap Tracing allows tracing of code which allocates/frees memory. Two tracing modes are supported:

- Standalone. In this mode trace data are kept on-board, so the size of gathered information is limited by the buffer assigned for that purposes. Analysis is done by the on-board code. There are a couple of APIs available for accessing and dumping collected info.
- Host-based. This mode does not have the limitation of the standalone mode, because trace data are sent to the host over JTAG connection using app_trace library. Later on they can be analysed using special tools.

Heap tracing can perform two functions:

- Leak checking: find memory which is allocated and never freed.
- Heap use analysis: show all functions that are allocating/freeing memory while the trace is running.

How To Diagnose Memory Leaks If you suspect a memory leak, the first step is to figure out which part of the program is leaking memory. Use the `xPortGetFreeHeapSize()`, *heap_caps_get_free_size()*, or *related functions* to track memory use over the life of the application. Try to narrow the leak down to a single function or sequence of functions where free memory always decreases and never recovers.

Standalone Mode Once you've identified the code which you think is leaking:

- In the project configuration menu, navigate to `Component settings` -> `Heap Memory Debugging` -> `Heap tracing` and select `Standalone` option (see *CONFIG_HEAP_TRACING_DEST*).
- Call the function *`heap_trace_init_standalone()`* early in the program, to register a buffer which can be used to record the memory trace.
- Call the function *`heap_trace_start()`* to begin recording all mallocs/frees in the system. Call this immediately before the piece of code which you suspect is leaking memory.
- Call the function *`heap_trace_stop()`* to stop the trace once the suspect piece of code has finished executing.
- Call the function *`heap_trace_dump()`* to dump the results of the heap trace.

An example:

```
#include "esp_heap_trace.h"

#define NUM_RECORDS 100
static heap_trace_record_t trace_record[NUM_RECORDS]; // This buffer must be in␣
↪internal RAM

...

void app_main()
{
    ...
    ESP_ERROR_CHECK( heap_trace_init_standalone(trace_record, NUM_RECORDS) );
    ...
}

void some_function()
{
    ESP_ERROR_CHECK( heap_trace_start(HEAP_TRACE_LEAKS) );

    do_something_you_suspect_is_leaking();

    ESP_ERROR_CHECK( heap_trace_stop() );
    heap_trace_dump();
    ...
}
```

The output from the heap trace will look something like this:

```
2 allocations trace (100 entry buffer)
32 bytes (@ 0x3ffaf214) allocated CPU 0 ccount 0x2e9b7384 caller␣
↪0x400d276d:0x400d27c1
0x400d276d: leak_some_memory at /path/to/idf/examples/get-started/blink/main/./
↪blink.c:27

0x400d27c1: blink_task at /path/to/idf/examples/get-started/blink/main/./blink.c:52

8 bytes (@ 0x3ffaf804) allocated CPU 0 ccount 0x2e9b79c0 caller␣
↪0x400d2776:0x400d27c1
0x400d2776: leak_some_memory at /path/to/idf/examples/get-started/blink/main/./
↪blink.c:29

0x400d27c1: blink_task at /path/to/idf/examples/get-started/blink/main/./blink.c:52

40 bytes 'leaked' in trace (2 allocations)
total allocations 2 total frees 0
```

(Above example output is using *IDF Monitor* to automatically decode PC addresses to their source files & line number.)

The first line indicates how many allocation entries are in the buffer, compared to its total size.

In HEAP_TRACE_LEAKS mode, for each traced memory allocation which has not already been freed a line is printed with:

- XX bytes is number of bytes allocated
- @ 0x... is the heap address returned from malloc/calloc.
- CPU x is the CPU (0 or 1) running when the allocation was made.
- ccount 0x... is the CCOUNT (CPU cycle count) register value when the allocation was mode. Is different for CPU 0 vs CPU 1.
- caller 0x... gives the call stack of the call to malloc()/free(), as a list of PC addresses. These can be decoded to source files and line numbers, as shown above.

The depth of the call stack recorded for each trace entry can be configured in the project configuration menu, under Heap Memory Debugging -> Enable heap tracing -> Heap tracing stack depth. Up to 10 stack frames can be recorded for each allocation (the default is 2). Each additional stack frame increases the memory usage of each heap_trace_record_t record by eight bytes.

Finally, the total number of 'leaked' bytes (bytes allocated but not freed while trace was running) is printed, and the total number of allocations this represents.

A warning will be printed if the trace buffer was not large enough to hold all the allocations which happened. If you see this warning, consider either shortening the tracing period or increasing the number of records in the trace buffer.

Host-Based Mode Once you've identified the code which you think is leaking:

- In the project configuration menu, navigate to Component settings -> Heap Memory Debugging -> *CONFIG_HEAP_TRACING_DEST* and select Host-Based.
- In the project configuration menu, navigate to Component settings -> Application Level Tracing -> *CONFIG_APPTRACE_DESTINATION* and select Trace memory.
- In the project configuration menu, navigate to Component settings -> Application Level Tracing -> FreeRTOS SystemView Tracing and enable *CONFIG_APPTRACE_SV_ENABLE*.
- Call the function *heap_trace_init_tohost()* early in the program, to initialize JTAG heap tracing module.
- Call the function *heap_trace_start()* to begin recording all mallocs/frees in the system. Call this immediately before the piece of code which you suspect is leaking memory. In host-based mode argument to this function is ignored and heap tracing module behaves like HEAP_TRACE_ALL was passed: all allocations and deallocations are sent to the host.
- Call the function *heap_trace_stop()* to stop the trace once the suspect piece of code has finished executing.

An example:

```
#include "esp_heap_trace.h"

...

void app_main()
{
    ...
    ESP_ERROR_CHECK( heap_trace_init_tohost() );
    ...
}

void some_function()
{
    ESP_ERROR_CHECK( heap_trace_start(HEAP_TRACE_LEAKS) );

    do_something_you_suspect_is_leaking();

    ESP_ERROR_CHECK( heap_trace_stop() );
    ...
}
```

To gather and analyse heap trace do the following on the host:

1. Build the program and download it to the target as described in *Getting Started Guide*.
2. Run OpenOCD (see *JTAG Debugging*).

注解: In order to use this feature you need OpenOCD version *v0.10.0-esp32-20181105* or later.

3. You can use GDB to start and/or stop tracing automatically. To do this you need to prepare special `gdbinit` file:

```
target remote :3333

mon reset halt
flushregs

tb heap_trace_start
commands
mon esp sysview start file:///tmp/heap.svdat
c
end

tb heap_trace_stop
commands
mon esp sysview stop
end

c
```

Using this file GDB will connect to the target, reset it, and start tracing when program hits breakpoint at *`heap_trace_start()`*. Trace data will be saved to `/tmp/heap_log.svdat`. Tracing will be stopped when program hits breakpoint at *`heap_trace_stop()`*.

4. Run GDB using the following command `xtensa-esp32-elf-gdb -x gdbinit </path/to/program/elf>`
5. Quit GDB when program stops at *`heap_trace_stop()`*. Trace data are saved in `/tmp/heap.svdat`
6. Run processing script `$IDF_PATH/tools/esp_app_trace/sysviewtrace_proc.py -p -b </path/to/program/elf> /tmp/heap_log.svdat`

The output from the heap trace will look something like this:

```
Parse trace from '/tmp/heap.svdat'...
Stop parsing trace. (Timeout 0.000000 sec while reading 1 bytes!)
Process events from '['/tmp/heap.svdat']'...
[0.002244575] HEAP: Allocated 1 bytes @ 0x3ffaffd8 from task "alloc" on core 0 by:
/home/user/projects/esp/esp-idf/examples/system/sysview_tracing_heap_log/main/
↪sysview_heap_log.c:47
/home/user/projects/esp/esp-idf/components/freertos/port.c:355 (discriminator 1)

[0.002258425] HEAP: Allocated 2 bytes @ 0x3ffaffe0 from task "alloc" on core 0 by:
/home/user/projects/esp/esp-idf/examples/system/sysview_tracing_heap_log/main/
↪sysview_heap_log.c:48
/home/user/projects/esp/esp-idf/components/freertos/port.c:355 (discriminator 1)

[0.002563725] HEAP: Freed bytes @ 0x3ffaffe0 from task "free" on core 0 by:
/home/user/projects/esp/esp-idf/examples/system/sysview_tracing_heap_log/main/
↪sysview_heap_log.c:31 (discriminator 9)
/home/user/projects/esp/esp-idf/components/freertos/port.c:355 (discriminator 1)

[0.002782950] HEAP: Freed bytes @ 0x3ffb40b8 from task "main" on core 0 by:
/home/user/projects/esp/esp-idf/components/freertos/tasks.c:4590
/home/user/projects/esp/esp-idf/components/freertos/tasks.c:4590
```

(下页继续)

(续上页)

```
[0.002798700] HEAP: Freed bytes @ 0x3ffb50bc from task "main" on core 0 by:
/home/user/projects/esp/esp-idf/components/freertos/tasks.c:4590
/home/user/projects/esp/esp-idf/components/freertos/tasks.c:4590

[0.102436025] HEAP: Allocated 2 bytes @ 0x3ffaffe0 from task "alloc" on core 0 by:
/home/user/projects/esp/esp-idf/examples/system/sysview_tracing_heap_log/main/
↪sysview_heap_log.c:47
/home/user/projects/esp/esp-idf/components/freertos/port.c:355 (discriminator 1)

[0.102449800] HEAP: Allocated 4 bytes @ 0x3ffaffe8 from task "alloc" on core 0 by:
/home/user/projects/esp/esp-idf/examples/system/sysview_tracing_heap_log/main/
↪sysview_heap_log.c:48
/home/user/projects/esp/esp-idf/components/freertos/port.c:355 (discriminator 1)

[0.102666150] HEAP: Freed bytes @ 0x3ffaffe8 from task "free" on core 0 by:
/home/user/projects/esp/esp-idf/examples/system/sysview_tracing_heap_log/main/
↪sysview_heap_log.c:31 (discriminator 9)
/home/user/projects/esp/esp-idf/components/freertos/port.c:355 (discriminator 1)

[0.202436200] HEAP: Allocated 3 bytes @ 0x3ffaffe8 from task "alloc" on core 0 by:
/home/user/projects/esp/esp-idf/examples/system/sysview_tracing_heap_log/main/
↪sysview_heap_log.c:47
/home/user/projects/esp/esp-idf/components/freertos/port.c:355 (discriminator 1)

[0.202451725] HEAP: Allocated 6 bytes @ 0x3ffafff0 from task "alloc" on core 0 by:
/home/user/projects/esp/esp-idf/examples/system/sysview_tracing_heap_log/main/
↪sysview_heap_log.c:48
/home/user/projects/esp/esp-idf/components/freertos/port.c:355 (discriminator 1)

[0.202667075] HEAP: Freed bytes @ 0x3ffafff0 from task "free" on core 0 by:
/home/user/projects/esp/esp-idf/examples/system/sysview_tracing_heap_log/main/
↪sysview_heap_log.c:31 (discriminator 9)
/home/user/projects/esp/esp-idf/components/freertos/port.c:355 (discriminator 1)

[0.302436000] HEAP: Allocated 4 bytes @ 0x3ffafff0 from task "alloc" on core 0 by:
/home/user/projects/esp/esp-idf/examples/system/sysview_tracing_heap_log/main/
↪sysview_heap_log.c:47
/home/user/projects/esp/esp-idf/components/freertos/port.c:355 (discriminator 1)

[0.302451475] HEAP: Allocated 8 bytes @ 0x3ffb40b8 from task "alloc" on core 0 by:
/home/user/projects/esp/esp-idf/examples/system/sysview_tracing_heap_log/main/
↪sysview_heap_log.c:48
/home/user/projects/esp/esp-idf/components/freertos/port.c:355 (discriminator 1)

[0.302667500] HEAP: Freed bytes @ 0x3ffb40b8 from task "free" on core 0 by:
/home/user/projects/esp/esp-idf/examples/system/sysview_tracing_heap_log/main/
↪sysview_heap_log.c:31 (discriminator 9)
/home/user/projects/esp/esp-idf/components/freertos/port.c:355 (discriminator 1)

Processing completed.
Processed 1019 events
=============== HEAP TRACE REPORT ===============
Processed 14 heap events.
[0.002244575] HEAP: Allocated 1 bytes @ 0x3ffaffd8 from task "alloc" on core 0 by:
/home/user/projects/esp/esp-idf/examples/system/sysview_tracing_heap_log/main/
↪sysview_heap_log.c:47
/home/user/projects/esp/esp-idf/components/freertos/port.c:355 (discriminator 1)

[0.102436025] HEAP: Allocated 2 bytes @ 0x3ffaffe0 from task "alloc" on core 0 by:
/home/user/projects/esp/esp-idf/examples/system/sysview_tracing_heap_log/main/
↪sysview_heap_log.c:47
```

(下页继续)

(续上页)

```
/home/user/projects/esp/esp-idf/components/freertos/port.c:355 (discriminator 1)

[0.202436200] HEAP: Allocated 3 bytes @ 0x3ffaffe8 from task "alloc" on core 0 by:
/home/user/projects/esp/esp-idf/examples/system/sysview_tracing_heap_log/main/
↪sysview_heap_log.c:47
/home/user/projects/esp/esp-idf/components/freertos/port.c:355 (discriminator 1)

[0.302436000] HEAP: Allocated 4 bytes @ 0x3ffafff0 from task "alloc" on core 0 by:
/home/user/projects/esp/esp-idf/examples/system/sysview_tracing_heap_log/main/
↪sysview_heap_log.c:47
/home/user/projects/esp/esp-idf/components/freertos/port.c:355 (discriminator 1)

Found 10 leaked bytes in 4 blocks.
```

Heap Tracing To Find Heap Corruption Heap tracing can also be used to help track down heap corruption. When a region in heap is corrupted, it may be from some other part of the program which allocated memory at a nearby address.

If you have some idea at what time the corruption occurred, enabling heap tracing in `HEAP_TRACE_ALL` mode allows you to record all of the functions which allocated memory, and the addresses of the allocations.

Using heap tracing in this way is very similar to memory leak detection as described above. For memory which is allocated and not freed, the output is the same. However, records will also be shown for memory which has been freed.

Performance Impact Enabling heap tracing in menuconfig increases the code size of your program, and has a very small negative impact on performance of heap allocation/free operations even when heap tracing is not running.

When heap tracing is running, heap allocation/free operations are substantially slower than when heap tracing is stopped. Increasing the depth of stack frames recorded for each allocation (see above) will also increase this performance impact.

False-Positive Memory Leaks Not everything printed by *`heap_trace_dump()`* is necessarily a memory leak. Among things which may show up here, but are not memory leaks:

- Any memory which is allocated after *`heap_trace_start()`* but then freed after *`heap_trace_stop()`* will appear in the leak dump.
- Allocations may be made by other tasks in the system. Depending on the timing of these tasks, it's quite possible this memory is freed after *`heap_trace_stop()`* is called.
- The first time a task uses stdio - for example, when it calls `printf()` - a lock (RTOS mutex semaphore) is allocated by the libc. This allocation lasts until the task is deleted.
- Certain uses of `printf()`, such as printing floating point numbers, will allocate some memory from the heap on demand. These allocations last until the task is deleted.
- The Bluetooth, WiFi, and TCP/IP libraries will allocate heap memory buffers to handle incoming or outgoing data. These memory buffers are usually short lived, but some may be shown in the heap leak trace if the data was received/transmitted by the lower levels of the network while the leak trace was running.
- TCP connections will continue to use some memory after they are closed, because of the `TIME_WAIT` state. After the `TIME_WAIT` period has completed, this memory will be freed.

One way to differentiate between "real" and "false positive" memory leaks is to call the suspect code multiple times while tracing is running, and look for patterns (multiple matching allocations) in the heap trace output.

API Reference - Heap Tracing

Header File

- heap/include/esp_heap_trace.h

Functions

esp_err_t **heap_trace_init_standalone** (*heap_trace_record_t *record_buffer*, size_t *num_records*)

Initialise heap tracing in standalone mode.

This function must be called before any other heap tracing functions.

To disable heap tracing and allow the buffer to be freed, stop tracing and then call heap_trace_init_standalone(NULL, 0);

Return

- ESP_ERR_NOT_SUPPORTED Project was compiled without heap tracing enabled in menuconfig.
- ESP_ERR_INVALID_STATE Heap tracing is currently in progress.
- ESP_OK Heap tracing initialised successfully.

Parameters

- `record_buffer`: Provide a buffer to use for heap trace data. Must remain valid any time heap tracing is enabled, meaning it must be allocated from internal memory not in PSRAM.
- `num_records`: Size of the heap trace buffer, as number of record structures.

esp_err_t **heap_trace_init_tohost** (void)

Initialise heap tracing in host-based mode.

This function must be called before any other heap tracing functions.

Return

- ESP_ERR_INVALID_STATE Heap tracing is currently in progress.
- ESP_OK Heap tracing initialised successfully.

esp_err_t **heap_trace_start** (*heap_trace_mode_t mode*)

Start heap tracing. All heap allocations & frees will be traced, until heap_trace_stop() is called.

Note heap_trace_init_standalone() must be called to provide a valid buffer, before this function is called.
Note Calling this function while heap tracing is running will reset the heap trace state and continue tracing.
Return

- ESP_ERR_NOT_SUPPORTED Project was compiled without heap tracing enabled in menuconfig.
- ESP_ERR_INVALID_STATE A non-zero-length buffer has not been set via heap_trace_init_standalone().
- ESP_OK Tracing is started.

Parameters

- `mode`: Mode for tracing.
  - HEAP_TRACE_ALL means all heap allocations and frees are traced.
  - HEAP_TRACE_LEAKS means only suspected memory leaks are traced. (When memory is freed, the record is removed from the trace buffer.)

esp_err_t **heap_trace_stop** (void)

Stop heap tracing.

Return

- ESP_ERR_NOT_SUPPORTED Project was compiled without heap tracing enabled in menuconfig.
- ESP_ERR_INVALID_STATE Heap tracing was not in progress.
- ESP_OK Heap tracing stopped..

esp_err_t **heap_trace_resume** (void)

Resume heap tracing which was previously stopped.

Unlike heap_trace_start(), this function does not clear the buffer of any pre-existing trace records.

The heap trace mode is the same as when heap_trace_start() was last called (or HEAP_TRACE_ALL if heap_trace_start() was never called).

Return

- ESP_ERR_NOT_SUPPORTED Project was compiled without heap tracing enabled in menuconfig.
- ESP_ERR_INVALID_STATE Heap tracing was already started.
- ESP_OK Heap tracing resumed.

size_t **heap_trace_get_count** (void)

Return number of records in the heap trace buffer.

It is safe to call this function while heap tracing is running.

esp_err_t **heap_trace_get**(size_t *index*, *heap_trace_record_t* **record*)
Return a raw record from the heap trace buffer.

Note It is safe to call this function while heap tracing is running, however in HEAP_TRACE_LEAK mode record indexing may skip entries unless heap tracing is stopped first.

Return
- ESP_ERR_NOT_SUPPORTED Project was compiled without heap tracing enabled in menuconfig.
- ESP_ERR_INVALID_STATE Heap tracing was not initialised.
- ESP_ERR_INVALID_ARG Index is out of bounds for current heap trace record count.
- ESP_OK Record returned successfully.

Parameters
- `index`: Index (zero-based) of the record to return.
- `[out] record`: Record where the heap trace record will be copied.

void **heap_trace_dump**(void)
Dump heap trace record data to stdout.

Note It is safe to call this function while heap tracing is running, however in HEAP_TRACE_LEAK mode the dump may skip entries unless heap tracing is stopped first.

Structures

struct heap_trace_record_t
Trace record data type. Stores information about an allocated region of memory.

Public Members

uint32_t **ccount**
CCOUNT of the CPU when the allocation was made. LSB (bit value 1) is the CPU number (0 or 1).

void ***address**
Address which was allocated.

size_t **size**
Size of the allocation.

void ***alloced_by**[**CONFIG_HEAP_TRACING_STACK_DEPTH**]
Call stack of the caller which allocated the memory.

void ***freed_by**[**CONFIG_HEAP_TRACING_STACK_DEPTH**]
Call stack of the caller which freed the memory (all zero if not freed.)

Macros

CONFIG_HEAP_TRACING_STACK_DEPTH

Enumerations

enum heap_trace_mode_t
Values:

HEAP_TRACE_ALL

HEAP_TRACE_LEAKS

2.7.14 High Resolution Timer

Overview

Although FreeRTOS provides software timers, these timers have a few limitations:

- Maximum resolution is equal to RTOS tick period
- Timer callbacks are dispatched from a low-priority task

Hardware timers are free from both of the limitations, but often they are less convenient to use. For example, application components may need timer events to fire at certain times in the future, but the hardware timer only contains one "compare" value used for interrupt generation. This means that some facility needs to be built on top of the hardware timer to manage the list of pending events can dispatch the callbacks for these events as corresponding hardware interrupts happen.

`esp_timer` set of APIs provides one-shot and periodic timers, microsecond time resolution, and 64-bit range.

Internally, `esp_timer` uses a 64-bit hardware timer, where the implemention depends on *CONFIG_ESP_TIMER_IMPL*. Available options are:

- LAC timer
- (legacy) FRC2 timer

注解： The FRC2 is a legacy option for ESP32 until v4.2, a 32-bit hardware timer was used. Starting at v4.2, use the new LAC timer option instead, it has a simpler implementation, and has smaller run time overhead because software handling of timer overflow is not needed.

`ESP_TIMER_TASK`. Timer callbacks are dispatched from a high-priority `esp_timer` task. Because all the callbacks are dispatched from the same task, it is recommended to only do the minimal possible amount of work from the callback itself, posting an event to a lower priority task using a queue instead.

If other tasks with priority higher than `esp_timer` are running, callback dispatching will be delayed until `esp_timer` task has a chance to run. For example, this will happen if a SPI Flash operation is in progress.

Creating and starting a timer, and dispatching the callback takes some time. Therefore there is a lower limit to the timeout value of one-shot `esp_timer`. If *`esp_timer_start_once()`* is called with a timeout value less than 20us, the callback will be dispatched only after approximately 20us.

Periodic `esp_timer` also imposes a 50us restriction on the minimal timer period. Periodic software timers with period of less than 50us are not practical since they would consume most of the CPU time. Consider using dedicated hardware peripherals or DMA features if you find that a timer with small period is required.

Using `esp_timer` APIs

Single timer is represented by *`esp_timer_handle_t`* type. Timer has a callback function associated with it. This callback function is called from the `esp_timer` task each time the timer elapses.

- To create a timer, call *`esp_timer_create()`*.
- To delete the timer when it is no longer needed, call *`esp_timer_delete()`*.

The timer can be started in one-shot mode or in periodic mode.

- To start the timer in one-shot mode, call *`esp_timer_start_once()`*, passing the time interval after which the callback should be called. When the callback gets called, the timer is considered to be stopped.
- To start the timer in periodic mode, call *`esp_timer_start_periodic()`*, passing the period with which the callback should be called. The timer keeps running until *`esp_timer_stop()`* is called.

Note that the timer must not be running when *`esp_timer_start_once()`* or *`esp_timer_start_periodic()`* is called. To restart a running timer, call *`esp_timer_stop()`* first, then call one of the start functions.

esp_timer during the light sleep

During light sleep, the esp_timer counter stops and no callback functions are called. Instead, the time is counted by the RTC counter. Upon waking up, the system gets the difference between the counters and calls a function that advances the esp_timer counter. Since the counter has been advanced, the system starts calling callbacks that were

not called during sleep. The number of callbacks depends on the duration of the sleep and the period of the timers. It can lead to overflow of some queues. This only applies to periodic timers, one-shot timers will be called once.

This behavior can be changed by calling `esp_timer_stop()` before sleeping. In some cases, this can be inconvenient, and instead of the stop function, you can use the *skip_unhandled_events* option during `esp_timer_create()`. When the *skip_unhandled_events* is true, if a periodic timer expires one or more times during light sleep then only one callback is called on wake.

Handling callbacks

esp_timer is designed to achieve a high-resolution low latency timer and the ability to handle delayed events. If the timer is late then the callback will be called as soon as possible, it will not be lost. In the worst case, when the timer has not been processed for more than one period (for periodic timers), in this case the callbacks will be called one after the other without waiting for the set period. This can be bad for some applications, and the *skip_unhandled_events* option was introduced to eliminate this behavior. If *skip_unhandled_events* is set then a periodic timer that has expired multiple times without being able to call the callback will still result in only one callback event once processing is possible.

Obtaining Current Time

`esp_timer` also provides a convenience function to obtain the time passed since start-up, with microsecond precision: `esp_timer_get_time()`. This function returns the number of microseconds since `esp_timer` was initialized, which usually happens shortly before `app_main` function is called.

Unlike *gettimeofday* function, values returned by `esp_timer_get_time()`:

- Start from zero after the chip wakes up from deep sleep
- Do not have timezone or DST adjustments applied

Application Example

The following example illustrates usage of `esp_timer` APIs: system/esp_timer.

API Reference

Header File

- esp_timer/include/esp_timer.h

Functions

esp_err_t **esp_timer_early_init**(void)

Minimal initialization of esp_timer.

This function can be called very early in startup process, after this call only esp_timer_get_time function can be used.

Note This function is called from startup code. Applications do not need to call this function before using other esp_timer APIs.

Return

- ESP_OK on success

esp_err_t **esp_timer_init**(void)

Initialize esp_timer library.

Note This function is called from startup code. Applications do not need to call this function before using other esp_timer APIs. Before calling this function, esp_timer_early_init must be called by the startup code.

Return

- ESP_OK on success
- ESP_ERR_NO_MEM if allocation has failed
- ESP_ERR_INVALID_STATE if already initialized
- other errors from interrupt allocator

esp_err_t **esp_timer_deinit**(void)

De-initialize esp_timer library.

Note Normally this function should not be called from applications

Return

- ESP_OK on success
- ESP_ERR_INVALID_STATE if not yet initialized

esp_err_t **esp_timer_create**(**const** *esp_timer_create_args_t* **create_args*, *esp_timer_handle_t* **out_handle*)

Create an esp_timer instance.

Note When done using the timer, delete it with esp_timer_delete function.

Return

- ESP_OK on success
- ESP_ERR_INVALID_ARG if some of the create_args are not valid
- ESP_ERR_INVALID_STATE if esp_timer library is not initialized yet
- ESP_ERR_NO_MEM if memory allocation fails

Parameters

- `create_args`: Pointer to a structure with timer creation arguments. Not saved by the library, can be allocated on the stack.
- `[out] out_handle`: Output, pointer to esp_timer_handle_t variable which will hold the created timer handle.

esp_err_t **esp_timer_start_once**(*esp_timer_handle_t timer*, uint64_t *timeout_us*)

Start one-shot timer.

Timer should not be running when this function is called.

Return

- ESP_OK on success
- ESP_ERR_INVALID_ARG if the handle is invalid
- ESP_ERR_INVALID_STATE if the timer is already running

Parameters

- `timer`: timer handle created using esp_timer_create
- `timeout_us`: timer timeout, in microseconds relative to the current moment

esp_err_t **esp_timer_start_periodic**(*esp_timer_handle_t timer*, uint64_t *period*)

Start a periodic timer.

Timer should not be running when this function is called. This function will start the timer which will trigger every ‘period’ microseconds.

Return

- ESP_OK on success
- ESP_ERR_INVALID_ARG if the handle is invalid
- ESP_ERR_INVALID_STATE if the timer is already running

Parameters

- `timer`: timer handle created using esp_timer_create
- `period`: timer period, in microseconds

esp_err_t **esp_timer_stop**(*esp_timer_handle_t timer*)

Stop the timer.

This function stops the timer previously started using esp_timer_start_once or esp_timer_start_periodic.

Return

- ESP_OK on success
- ESP_ERR_INVALID_STATE if the timer is not running

Parameters

- `timer`: timer handle created using esp_timer_create

esp_err_t **esp_timer_delete**(*esp_timer_handle_t timer*)
Delete an esp_timer instance.

The timer must be stopped before deleting. A one-shot timer which has expired does not need to be stopped.

Return
- ESP_OK on success
- ESP_ERR_INVALID_STATE if the timer is running

Parameters
- `timer`: timer handle allocated using esp_timer_create

int64_t **esp_timer_get_time**(void)
Get time in microseconds since boot.

Return number of microseconds since underlying timer has been started

int64_t **esp_timer_get_next_alarm**(void)
Get the timestamp when the next timeout is expected to occur.

Return Timestamp of the nearest timer event, in microseconds. The timebase is the same as for the values returned by esp_timer_get_time.

esp_err_t **esp_timer_dump**(FILE **stream*)
Dump the list of timers to a stream.

If CONFIG_ESP_TIMER_PROFILING option is enabled, this prints the list of all the existing timers. Otherwise, only the list active timers is printed.

The format is:

name period alarm times_armed times_triggered total_callback_run_time

where:

name —timer name (if CONFIG_ESP_TIMER_PROFILING is defined), or timer pointer period —period of timer, in microseconds, or 0 for one-shot timer alarm - time of the next alarm, in microseconds since boot, or 0 if the timer is not started

The following fields are printed if CONFIG_ESP_TIMER_PROFILING is defined:

times_armed —number of times the timer was armed via esp_timer_start_X times_triggered - number of times the callback was called total_callback_run_time - total time taken by callback to execute, across all calls

Return
- ESP_OK on success
- ESP_ERR_NO_MEM if can not allocate temporary buffer for the output

Parameters
- `stream`: stream (such as stdout) to dump the information to

bool **esp_timer_is_active**(*esp_timer_handle_t timer*)
Returns status of a timer, active or not.

This function is used to identify if the timer is still active or not.

Return
- 1 if timer is still active
- 0 if timer is not active.

Parameters
- `timer`: timer handle created using esp_timer_create

Structures

struct esp_timer_create_args_t
Timer configuration passed to esp_timer_create.

Public Members

esp_timer_cb_t **callback**
Function to call when timer expires.

void ***arg**
Argument to pass to the callback.

esp_timer_dispatch_t **dispatch_method**
Call the callback from task or from ISR.

const char ***name**
Timer name, used in esp_timer_dump function.

bool **skip_unhandled_events**
Skip unhandled events for periodic timers.

Type Definitions

typedef struct esp_timer ***esp_timer_handle_t**
Opaque type representing a single esp_timer.

typedef void (***esp_timer_cb_t**) (void *arg)
Timer callback function type.

Parameters
- `arg`: pointer to opaque user-specific data

Enumerations

enum esp_timer_dispatch_t
Method for dispatching timer callback.

Values:

ESP_TIMER_TASK
Callback is called from timer task.

2.7.15 The himem allocation API

Overview

The ESP32 can access external SPI RAM transparently, so you can use it as normal memory in your program code. However, because the address space for external memory is limited in size, only the first 4MiB can be used as such. Access to the remaining memory is still possible, however this needs to go through a bankswitching scheme controlled by the himem API.

Specifically, what is implemented by the himem API is a bankswitching scheme. Hardware-wise, the 4MiB region for external SPI RAM is mapped into the CPU address space by a MMU, which maps a configurable 32K bank/page of external SPI RAM into each of the 32K pages in the 4MiB region accessed by the CPU. For external memories that are <=4MiB, this MMU is configured to unity mapping, effectively mapping each CPU address 1-to-1 to the external SPI RAM address.

In order to use the himem API, you have to enable it in the menuconfig using `CONFIG_SPIRAM_BANKSWITCH_ENABLE`, as well as set the amount of banks reserved for this in `CONFIG_SPIRAM_BANKSWITCH_RESERVE`. This decreases the amount of external memory allocated by functions like `malloc()`, but it allows you to use the himem api to map any of the remaining memory into the reserved banks.

The himem API is more-or-less an abstraction of the bankswitching scheme: it allows you to claim one or more banks of address space (called ‘regions’ in the API) as well as one or more of banks of memory to map into the ranges.

Example

An example doing a simple memory test of the high memory range is available in esp-idf: system/himem

API Reference

Header File

- esp32/include/esp32/himem.h

Functions

esp_err_t **esp_himem_alloc**(size_t *size*, *esp_himem_handle_t* **handle_out*)

Allocate a block in high memory.

Return - ESP_OK if succesful
- ESP_ERR_NO_MEM if out of memory
- ESP_ERR_INVALID_SIZE if size is not a multiple of 32K

Parameters
- `size`: Size of the to-be-allocated block, in bytes. Note that this needs to be a multiple of the external RAM mmu block size (32K).
- `[out] handle_out`: Handle to be returned

esp_err_t **esp_himem_alloc_map_range**(size_t *size*, *esp_himem_rangehandle_t* **handle_out*)

Allocate a memory region to map blocks into.

This allocates a contiguous CPU memory region that can be used to map blocks of physical memory into.

Return - ESP_OK if succesful
- ESP_ERR_NO_MEM if out of memory or address space
- ESP_ERR_INVALID_SIZE if size is not a multiple of 32K

Parameters
- `size`: Size of the range to be allocated. Note this needs to be a multiple of the external RAM mmu block size (32K).
- `[out] handle_out`: Handle to be returned

esp_err_t **esp_himem_map**(*esp_himem_handle_t* *handle*, *esp_himem_rangehandle_t* *range*, size_t *ram_offset*, size_t *range_offset*, size_t *len*, int *flags*, void ***out_ptr*)

Map a block of high memory into the CPUs address space.

This effectively makes the block available for read/write operations.

Note The region to be mapped needs to have offsets and sizes that are aligned to the SPI RAM MMU block size (32K)

Return - ESP_OK if the memory could be mapped
- ESP_ERR_INVALID_ARG if offset, range or len aren't MMU-block-aligned (32K)
- ESP_ERR_INVALID_SIZE if the offsets/lengths don't fit in the allocated memory or range
- ESP_ERR_INVALID_STATE if a block in the selected ram offset/length is already mapped, or if a block in the selected range offset/length already has a mapping.

Parameters
- `handle`: Handle to the block of memory, as given by esp_himem_alloc
- `range`: Range handle to map the memory in
- `ram_offset`: Offset into the block of physical memory of the block to map
- `range_offset`: Offset into the address range where the block will be mapped
- `len`: Length of region to map
- `flags`: One of ESP_HIMEM_MAPFLAG_*
- `[out] out_ptr`: Pointer to variable to store resulting memory pointer in

esp_err_t **esp_himem_free**(*esp_himem_handle_t* *handle*)

Free a block of physical memory.

This clears out the associated handle making the memory available for re-allocation again. This will only succeed if none of the memory blocks currently have a mapping.

Return - ESP_OK if the memory is succesfully freed
- ESP_ERR_INVALID_ARG if the handle still is (partially) mapped

Parameters
- `handle`: Handle to the block of memory, as given by esp_himem_alloc

esp_err_t **esp_himem_free_map_range**(*esp_himem_rangehandle_t handle*)
Free a mapping range.

This clears out the associated handle making the range available for re-allocation again. This will only succeed if none of the range blocks currently are used for a mapping.

Return - ESP_OK if the memory is succesfully freed
- ESP_ERR_INVALID_ARG if the handle still is (partially) mapped to

Parameters
- `handle`: Handle to the range block, as given by esp_himem_alloc_map_range

esp_err_t **esp_himem_unmap**(*esp_himem_rangehandle_t range*, void **ptr*, size_t *len*)
Unmap a region.

Return - ESP_OK if the memory is succesfully unmapped,
- ESP_ERR_INVALID_ARG if ptr or len are invalid.

Parameters
- `range`: Range handle
- `ptr`: Pointer returned by esp_himem_map
- `len`: Length of the block to be unmapped. Must be aligned to the SPI RAM MMU blocksize (32K)

size_t **esp_himem_get_phys_size**(void)
Get total amount of memory under control of himem API.

Return Amount of memory, in bytes

size_t **esp_himem_get_free_size**(void)
Get free amount of memory under control of himem API.

Return Amount of free memory, in bytes

size_t **esp_himem_reserved_area_size**(void)
Get amount of SPI memory address space needed for bankswitching.

Note This is also weakly defined in esp32/spiram.c and returns 0 there, so if no other function in this file is used, no memory is reserved.

Return Amount of reserved area, in bytes

Macros

ESP_HIMEM_BLKSZ
ESP_HIMEM_MAPFLAG_RO
Indicates that a mapping will only be read from. Note that this is unused for now.

Type Definitions

typedef struct esp_himem_ramdata_t ***esp_himem_handle_t**
typedef struct esp_himem_rangedata_t ***esp_himem_rangehandle_t**

2.7.16 Inter-Processor Call

Overview

Due to the dual core nature of the ESP32, there are instances where a certain function must be run in the context of a particular core (e.g. allocating ISR to an interrupt source of a particular core). The IPC (Inter-Processor Call) feature allows for the execution of functions on a particular CPU.

A given function can be executed on a particular core by calling *esp_ipc_call()* or *esp_ipc_call_blocking()*. IPC is implemented via two high priority FreeRTOS tasks pinned to

each CPU known as the IPC Tasks. The two IPC Tasks remain inactive (blocked) until `esp_ipc_call()` or `esp_ipc_call_blocking()` is called. When an IPC Task of a particular core is unblocked, it will preempt the current running task on that core and execute a given function.

Usage

`esp_ipc_call()` unblocks the IPC task on a particular core to execute a given function. The task that calls `esp_ipc_call()` will be blocked until the IPC Task begins execution of the given function. `esp_ipc_call_blocking()` is similar but will block the calling task until the IPC Task has completed execution of the given function.

Functions executed by IPCs must be functions of type *void func(void *arg)*. To run more complex functions which require a larger stack, the IPC tasks' stack size can be configured by modifying *CONFIG_ESP_IPC_TASK_STACK_SIZE* in *menuconfig*. The IPC API is protected by a mutex hence simultaneous IPC calls are not possible.

Care should taken to avoid deadlock when writing functions to be executed by IPC, especially when attempting to take a mutex within the function.

API Reference

Header File

- esp_ipc/include/esp_ipc.h

Functions

esp_err_t **esp_ipc_call**(uint32_t *cpu_id*, esp_ipc_func_t *func*, void **arg*)

Execute a function on the given CPU.

Run a given function on a particular CPU. The given function must accept a void* argument and return void. The given function is run in the context of the IPC task of the CPU specified by the cpu_id parameter. The calling task will be blocked until the IPC task begins executing the given function. If another IPC call is ongoing, the calling task will block until the other IPC call completes. The stack size allocated for the IPC task can be configured in the "Inter-Processor Call (IPC) task stack size" setting in menuconfig. Increase this setting if the given function requires more stack than default.

Note In single-core mode, returns ESP_ERR_INVALID_ARG for cpu_id 1.

Return

- ESP_ERR_INVALID_ARG if cpu_id is invalid
- ESP_ERR_INVALID_STATE if the FreeRTOS scheduler is not running
- ESP_OK otherwise

Parameters

- `[in] cpu_id`: CPU where the given function should be executed (0 or 1)
- `[in] func`: Pointer to a function of type void func(void* arg) to be executed
- `[in] arg`: Arbitrary argument of type void* to be passed into the function

esp_err_t **esp_ipc_call_blocking**(uint32_t *cpu_id*, esp_ipc_func_t *func*, void **arg*)

Execute a function on the given CPU and blocks until it completes.

Run a given function on a particular CPU. The given function must accept a void* argument and return void. The given function is run in the context of the IPC task of the CPU specified by the cpu_id parameter. The calling task will be blocked until the IPC task completes execution of the given function. If another IPC call is ongoing, the calling task will block until the other IPC call completes. The stack size allocated for the IPC task can be configured in the "Inter-Processor Call (IPC) task stack size" setting in menuconfig. Increase this setting if the given function requires more stack than default.

Note In single-core mode, returns ESP_ERR_INVALID_ARG for cpu_id 1.

Return

- ESP_ERR_INVALID_ARG if cpu_id is invalid
- ESP_ERR_INVALID_STATE if the FreeRTOS scheduler is not running
- ESP_OK otherwise

Parameters

- [in] cpu_id: CPU where the given function should be executed (0 or 1)
- [in] func: Pointer to a function of type void func(void* arg) to be executed
- [in] arg: Arbitrary argument of type void* to be passed into the function

2.7.17 Call function with external stack

Overview

A given function can be executed with a user allocated stack space which is independent of current task stack, this mechanism can be used to save stack space wasted by tasks which call a common function with intensive stack usage such as *printf*. The given function can be called inside the shared stack space which is a callback function deferred by calling *esp_execute_shared_stack_function()*, passing that function as parameter

Usage

esp_execute_shared_stack_function() takes four arguments, a mutex object allocated by the caller, which is used to protect if the same function shares its allocated stack, a pointer to the top of stack used to that fuction, the size in bytes of stack and, a pointer to a user function where the shared stack space will reside, after calling the function, the user defined function will be deferred as a callback where functions can be called using the user allocated space without taking space from current task stack.

The usage may looks like the code below:

```
void external_stack_function(void)
{
    printf("Executing this printf from external stack! \n");
}

//Let's suppose we wanting to call printf using a separated stack space
//allowing app to reduce its stack size.
void app_main()
{
    //Allocate a stack buffer, from heap or as a static form:
    portSTACK_TYPE *shared_stack = malloc(8192 * sizeof(portSTACK_TYPE));
    assert(shared_stack != NULL);

    //Allocate a mutex to protect its usage:
    SemaphoreHandle_t printf_lock = xSemaphoreCreateMutex();
    assert(printf_lock != NULL);

    //Call the desired function using the macro helper:
    esp_execute_shared_stack_function(printf_lock,
                                      shared_stack,
                                      8192,
                                      external_stack_function);

    vSemaphoreDelete(printf_lock);
    free(shared_stack);
}
```

API Reference

Header File

- esp_common/include/esp_expression_with_stack.h

Functions

void **esp_execute_shared_stack_function**(*SemaphoreHandle_t lock*, void **stack*, size_t *stack_size*, *shared_stack_function function*)

Calls user defined shared stack space function.

Note if either lock, stack or stack size is invalid, the expression will be called using the current stack.

Parameters

- `lock`: Mutex object to protect in case of shared stack
- `stack`: Pointer to user alocated stack
- `stack_size`: Size of current stack in bytes
- `function`: pointer to the shared stack function to be executed

Macros

ESP_EXECUTE_EXPRESSION_WITH_STACK(lock, stack, stack_size, expression)

Type Definitions

typedef void (***shared_stack_function**)(void)

2.7.18 Interrupt allocation

Overview

The ESP32 has two cores, with 32 interrupts each. Each interrupt has a certain priority level, most (but not all) interrupts are connected to the interrupt mux.

Because there are more interrupt sources than interrupts, sometimes it makes sense to share an interrupt in multiple drivers. The *esp_intr_alloc()* abstraction exists to hide all these implementation details.

A driver can allocate an interrupt for a certain peripheral by calling *esp_intr_alloc()* (or *esp_intr_alloc_intrstatus()*). It can use the flags passed to this function to set the type of interrupt allocated, specifying a specific level or trigger method. The interrupt allocation code will then find an applicable interrupt, use the interrupt mux to hook it up to the peripheral, and install the given interrupt handler and ISR to it.

This code has two different types of interrupts it handles differently: Shared interrupts and non-shared interrupts. The simplest of the two are non-shared interrupts: a separate interrupt is allocated per esp_intr_alloc call and this interrupt is solely used for the peripheral attached to it, with only one ISR that will get called. Shared interrupts can have multiple peripherals triggering it, with multiple ISRs being called when one of the peripherals attached signals an interrupt. Thus, ISRs that are intended for shared interrupts should check the interrupt status of the peripheral they service in order to see if any action is required.

Non-shared interrupts can be either level- or edge-triggered. Shared interrupts can only be level interrupts (because of the chance of missed interrupts when edge interrupts are used.) (The logic behind this: DevA and DevB share an int. DevB signals an int. Int line goes high. ISR handler calls code for DevA -> does nothing. ISR handler calls code for DevB, but while doing that, DevA signals an int. ISR DevB is done, clears int for DevB, exits interrupt code. Now an interrupt for DevA is still pending, but because the int line never went low (DevA kept it high even when the int for DevB was cleared) the interrupt is never serviced.)

Multicore issues

Peripherals that can generate interrupts can be divided in two types:

- External peripherals, within the ESP32 but outside the Xtensa cores themselves. Most ESP32 peripherals are of this type.
- Internal peripherals, part of the Xtensa CPU cores themselves.

Interrupt handling differs slightly between these two types of peripherals.

Internal peripheral interrupts Each Xtensa CPU core has its own set of six internal peripherals:

- Three timer comparators
- A performance monitor
- Two software interrupts.

Internal interrupt sources are defined in esp_intr_alloc.h as `ETS_INTERNAL_*_INTR_SOURCE`.

These peripherals can only be configured from the core they are associated with. When generating an interrupt, the interrupt they generate is hard-wired to their associated core; it's not possible to have e.g. an internal timer comparator of one core generate an interrupt on another core. That is why these sources can only be managed using a task running on that specific core. Internal interrupt sources are still allocatable using esp_intr_alloc as normal, but they cannot be shared and will always have a fixed interrupt level (namely, the one associated in hardware with the peripheral).

External Peripheral Interrupts The remaining interrupt sources are from external peripherals. These are defined in soc/soc.h as `ETS_*_INTR_SOURCE`.

Non-internal interrupt slots in both CPU cores are wired to an interrupt multiplexer, which can be used to route any external interrupt source to any of these interrupt slots.

- Allocating an external interrupt will always allocate it on the core that does the allocation.
- Freeing an external interrupt must always happen on the same core it was allocated on.
- Disabling and enabling external interrupts from another core is allowed.
- Multiple external interrupt sources can share an interrupt slot by passing `ESP_INTR_FLAG_SHARED` as a flag to esp_intr_alloc().

Care should be taken when calling esp_intr_alloc() from a task which is not pinned to a core. During task switching, these tasks can migrate between cores. Therefore it is impossible to tell which CPU the interrupt is allocated on, which makes it difficult to free the interrupt handle and may also cause debugging difficulties. It is advised to use xTaskCreatePinnedToCore() with a specific CoreID argument to create tasks that will allocate interrupts. In the case of internal interrupt sources, this is required.

IRAM-Safe Interrupt Handlers

The `ESP_INTR_FLAG_IRAM` flag registers an interrupt handler that always runs from IRAM (and reads all its data from DRAM), and therefore does not need to be disabled during flash erase and write operations.

This is useful for interrupts which need a guaranteed minimum execution latency, as flash write and erase operations can be slow (erases can take tens or hundreds of milliseconds to complete).

It can also be useful to keep an interrupt handler in IRAM if it is called very frequently, to avoid flash cache misses.

Refer to the *SPI flash API documentation* for more details.

Multiple Handlers Sharing A Source

Several handlers can be assigned to a same source, given that all handlers are allocated using the `ESP_INTR_FLAG_SHARED` flag. They'll be all allocated to the interrupt, which the source is attached to, and called sequentially when the source is active. The handlers can be disabled and freed individually. The source is attached to the interrupt (enabled), if one or more handlers are enabled, otherwise detached. A handler will never be called when disabled, while **its source may still be triggered** if any one of its handler enabled.

Sources attached to non-shared interrupt do not support this feature.

Though the framework support this feature, you have to use it *very carefully*. There usually exist 2 ways to stop a interrupt from being triggered: *disable the source* or *mask peripheral interrupt status*. IDF only handles the enabling and disabling of the source itself, leaving status and mask bits to be handled by users. **Status bits should always be masked before the handler responsible for it is disabled, or the status should be handled in other enabled interrupt properly**. You may leave some status bits unhandled if you just disable one of all the handlers without masking the status bits, which causes the interrupt to trigger infinitely resulting in a system crash.

API Reference

Header File

- esp_system/include/esp_intr_alloc.h

Functions

esp_err_t **esp_intr_mark_shared**(int *intno*, int *cpu*, bool *is_in_iram*)

Mark an interrupt as a shared interrupt.

This will mark a certain interrupt on the specified CPU as an interrupt that can be used to hook shared interrupt handlers to.

Return ESP_ERR_INVALID_ARG if cpu or intno is invalid ESP_OK otherwise

Parameters

- `intno`: The number of the interrupt (0-31)
- `cpu`: CPU on which the interrupt should be marked as shared (0 or 1)
- `is_in_iram`: Shared interrupt is for handlers that reside in IRAM and the int can be left enabled while the flash cache is disabled.

esp_err_t **esp_intr_reserve**(int *intno*, int *cpu*)

Reserve an interrupt to be used outside of this framework.

This will mark a certain interrupt on the specified CPU as reserved, not to be allocated for any reason.

Return ESP_ERR_INVALID_ARG if cpu or intno is invalid ESP_OK otherwise

Parameters

- `intno`: The number of the interrupt (0-31)
- `cpu`: CPU on which the interrupt should be marked as shared (0 or 1)

esp_err_t **esp_intr_alloc**(int *source*, int *flags*, *intr_handler_t* *handler*, void **arg*, *intr_handle_t* **ret_handle*)

Allocate an interrupt with the given parameters.

This finds an interrupt that matches the restrictions as given in the flags parameter, maps the given interrupt source to it and hooks up the given interrupt handler (with optional argument) as well. If needed, it can return a handle for the interrupt as well.

The interrupt will always be allocated on the core that runs this function.

If ESP_INTR_FLAG_IRAM flag is used, and handler address is not in IRAM or RTC_FAST_MEM, then ESP_ERR_INVALID_ARG is returned.

Return ESP_ERR_INVALID_ARG if the combination of arguments is invalid. ESP_ERR_NOT_FOUND No free interrupt found with the specified flags ESP_OK otherwise

Parameters

- `source`: The interrupt source. One of the ETS_*_INTR_SOURCE interrupt mux sources, as defined in soc/soc.h, or one of the internal ETS_INTERNAL_*_INTR_SOURCE sources as defined in this header.
- `flags`: An ORred mask of the ESP_INTR_FLAG_* defines. These restrict the choice of interrupts that this routine can choose from. If this value is 0, it will default to allocating a non-shared interrupt of level 1, 2 or 3. If this is ESP_INTR_FLAG_SHARED, it will allocate a shared interrupt of level 1. Setting ESP_INTR_FLAG_INTRDISABLED will return from this function with the interrupt disabled.
- `handler`: The interrupt handler. Must be NULL when an interrupt of level >3 is requested, because these types of interrupts aren't C-callable.
- `arg`: Optional argument for passed to the interrupt handler
- `ret_handle`: Pointer to an intr_handle_t to store a handle that can later be used to request details or free the interrupt. Can be NULL if no handle is required.

esp_err_t **esp_intr_alloc_intrstatus**(int *source*, int *flags*, uint32_t *intrstatusreg*, uint32_t *intrstatusmask*, *intr_handler_t* *handler*, void **arg*, *intr_handle_t* **ret_handle*)

Allocate an interrupt with the given parameters.

This essentially does the same as esp_intr_alloc, but allows specifying a register and mask combo. For shared interrupts, the handler is only called if a read from the specified register, ANDed with the mask, returns non-zero. By passing an interrupt status register address and a fitting mask, this can be used to accelerate interrupt handling in the case a shared interrupt is triggered; by checking the interrupt statuses first, the code can decide which ISRs can be skipped

Return ESP_ERR_INVALID_ARG if the combination of arguments is invalid. ESP_ERR_NOT_FOUND No free interrupt found with the specified flags ESP_OK otherwise

Parameters

- `source`: The interrupt source. One of the ETS_*_INTR_SOURCE interrupt mux sources, as defined in soc/soc.h, or one of the internal ETS_INTERNAL_*_INTR_SOURCE sources as defined in this header.
- `flags`: An ORred mask of the ESP_INTR_FLAG_* defines. These restrict the choice of interrupts that this routine can choose from. If this value is 0, it will default to allocating a non-shared interrupt of level 1, 2 or 3. If this is ESP_INTR_FLAG_SHARED, it will allocate a shared interrupt of level 1. Setting ESP_INTR_FLAG_INTRDISABLED will return from this function with the interrupt disabled.
- `intrstatusreg`: The address of an interrupt status register
- `intrstatusmask`: A mask. If a read of address intrstatusreg has any of the bits that are 1 in the mask set, the ISR will be called. If not, it will be skipped.
- `handler`: The interrupt handler. Must be NULL when an interrupt of level >3 is requested, because these types of interrupts aren't C-callable.
- `arg`: Optional argument for passed to the interrupt handler
- `ret_handle`: Pointer to an intr_handle_t to store a handle that can later be used to request details or free the interrupt. Can be NULL if no handle is required.

esp_err_t **esp_intr_free** (*intr_handle_t handle*)

Disable and free an interrupt.

Use an interrupt handle to disable the interrupt and release the resources associated with it. If the current core is not the core that registered this interrupt, this routine will be assigned to the core that allocated this interrupt, blocking and waiting until the resource is successfully released.

Note When the handler shares its source with other handlers, the interrupt status bits it's responsible for should be managed properly before freeing it. see `esp_intr_disable` for more details. Please do not call this function in `esp_ipc_call_blocking`.

Return ESP_ERR_INVALID_ARG the handle is NULL ESP_FAIL failed to release this handle ESP_OK otherwise

Parameters

- `handle`: The handle, as obtained by esp_intr_alloc or esp_intr_alloc_intrstatus

int **esp_intr_get_cpu** (*intr_handle_t handle*)

Get CPU number an interrupt is tied to.

Return The core number where the interrupt is allocated

Parameters

- `handle`: The handle, as obtained by esp_intr_alloc or esp_intr_alloc_intrstatus

int **esp_intr_get_intno** (*intr_handle_t handle*)

Get the allocated interrupt for a certain handle.

Return The interrupt number

Parameters

- `handle`: The handle, as obtained by esp_intr_alloc or esp_intr_alloc_intrstatus

esp_err_t **esp_intr_disable** (*intr_handle_t handle*)

Disable the interrupt associated with the handle.

Note

1. For local interrupts (ESP_INTERNAL_* sources), this function has to be called on the CPU the interrupt is allocated on. Other interrupts have no such restriction.
2. When several handlers sharing a same interrupt source, interrupt status bits, which are handled in the handler to be disabled, should be masked before the disabling, or handled in other enabled interrupts

properly. Miss of interrupt status handling will cause infinite interrupt calls and finally system crash.

Return ESP_ERR_INVALID_ARG if the combination of arguments is invalid. ESP_OK otherwise

Parameters

- `handle`: The handle, as obtained by esp_intr_alloc or esp_intr_alloc_intrstatus

esp_err_t **esp_intr_enable** (*intr_handle_t handle*)

Enable the interrupt associated with the handle.

Note For local interrupts (ESP_INTERNAL_* sources), this function has to be called on the CPU the interrupt is allocated on. Other interrupts have no such restriction.

Return ESP_ERR_INVALID_ARG if the combination of arguments is invalid. ESP_OK otherwise

Parameters

- `handle`: The handle, as obtained by esp_intr_alloc or esp_intr_alloc_intrstatus

esp_err_t **esp_intr_set_in_iram** (*intr_handle_t handle*, bool *is_in_iram*)

Set the "in IRAM" status of the handler.

Note Does not work on shared interrupts.

Return ESP_ERR_INVALID_ARG if the combination of arguments is invalid. ESP_OK otherwise

Parameters

- `handle`: The handle, as obtained by esp_intr_alloc or esp_intr_alloc_intrstatus
- `is_in_iram`: Whether the handler associated with this handle resides in IRAM. Handlers residing in IRAM can be called when cache is disabled.

void **esp_intr_noniram_disable** (void)

Disable interrupts that aren't specifically marked as running from IRAM.

void **esp_intr_noniram_enable** (void)

Re-enable interrupts disabled by esp_intr_noniram_disable.

void **esp_intr_enable_source** (int *inum*)

enable the interrupt source based on its number

Parameters

- `inum`: interrupt number from 0 to 31

void **esp_intr_disable_source** (int *inum*)

disable the interrupt source based on its number

Parameters

- `inum`: interrupt number from 0 to 31

static int **esp_intr_flags_to_level** (int *flags*)

Get the lowest interrupt level from the flags.

Parameters

- `flags`: The same flags that pass to `esp_intr_alloc_intrstatus` API

Macros

ESP_INTR_FLAG_LEVEL1

Interrupt allocation flags.

These flags can be used to specify which interrupt qualities the code calling esp_intr_alloc* needs.Accept a Level 1 interrupt vector (lowest priority)

ESP_INTR_FLAG_LEVEL2

Accept a Level 2 interrupt vector.

ESP_INTR_FLAG_LEVEL3

Accept a Level 3 interrupt vector.

ESP_INTR_FLAG_LEVEL4

Accept a Level 4 interrupt vector.

ESP_INTR_FLAG_LEVEL5

Accept a Level 5 interrupt vector.

ESP_INTR_FLAG_LEVEL6
Accept a Level 6 interrupt vector.

ESP_INTR_FLAG_NMI
Accept a Level 7 interrupt vector (highest priority)

ESP_INTR_FLAG_SHARED
Interrupt can be shared between ISRs.

ESP_INTR_FLAG_EDGE
Edge-triggered interrupt.

ESP_INTR_FLAG_IRAM
ISR can be called if cache is disabled.

ESP_INTR_FLAG_INTRDISABLED
Return with this interrupt disabled.

ESP_INTR_FLAG_LOWMED
Low and medium prio interrupts. These can be handled in C.

ESP_INTR_FLAG_HIGH
High level interrupts. Need to be handled in assembly.

ESP_INTR_FLAG_LEVELMASK
Mask for all level flags.

ETS_INTERNAL_TIMER0_INTR_SOURCE
Platform timer 0 interrupt source.

The esp_intr_alloc* functions can allocate an int for all ETS_*_INTR_SOURCE interrupt sources that are routed through the interrupt mux. Apart from these sources, each core also has some internal sources that do not pass through the interrupt mux. To allocate an interrupt for these sources, pass these pseudo-sources to the functions.

ETS_INTERNAL_TIMER1_INTR_SOURCE
Platform timer 1 interrupt source.

ETS_INTERNAL_TIMER2_INTR_SOURCE
Platform timer 2 interrupt source.

ETS_INTERNAL_SW0_INTR_SOURCE
Software int source 1.

ETS_INTERNAL_SW1_INTR_SOURCE
Software int source 2.

ETS_INTERNAL_PROFILING_INTR_SOURCE
Int source for profiling.

ETS_INTERNAL_INTR_SOURCE_OFF
Provides SystemView with positive IRQ IDs, otherwise scheduler events are not shown properly

ESP_INTR_ENABLE(inum)
Enable interrupt by interrupt number

ESP_INTR_DISABLE(inum)
Disable interrupt by interrupt number

Type Definitions

typedef void (***intr_handler_t**)(void *arg)
Function prototype for interrupt handler function

typedef struct *intr_handle_data_t* **intr_handle_data_t**
Interrupt handler associated data structure

typedef *intr_handle_data_t* ***intr_handle_t**
Handle to an interrupt handler

2.7.19 Logging library

Overview

The logging library provides two ways for setting log verbosity:

- **At compile time**: in menuconfig, set the verbosity level using the option CONFIG_LOG_DEFAULT_LEVEL. All logging statements for verbosity levels higher than CONFIG_LOG_DEFAULT_LEVEL will be removed by the preprocessor.
- **At runtime**: all logs for verbosity levels lower than CONFIG_LOG_DEFAULT_LEVEL are enabled by default. The function *esp_log_level_set()* can be used to set a logging level on a per module basis. Modules are identified by their tags, which are human-readable ASCII zero-terminated strings.

There are the following verbosity levels:

- Error (lowest)
- Warning
- Info
- Debug
- Verbose (highest)

注解: The function *esp_log_level_set()* cannot set logging levels higher than specified by CONFIG_LOG_DEFAULT_LEVEL. To increase log level for a specific file at compile time, use the macro *LOG_LOCAL_LEVEL* (see the details below).

How to use this library

In each C file that uses logging functionality, define the TAG variable as shown below:

```
static const char* TAG = "MyModule";
```

Then use one of logging macros to produce output, e.g:

```
ESP_LOGW(TAG, "Baud rate error %.1f%%. Requested: %d baud, actual: %d baud", error␣
↪* 100, baud_req, baud_real);
```

Several macros are available for different verbosity levels:

- ESP_LOGE - error (lowest)
- ESP_LOGW - warning
- ESP_LOGI - info
- ESP_LOGD - debug
- ESP_LOGV - verbose (highest)

Additionally, there are ESP_EARLY_LOGx versions for each of these macros, e.g., *ESP_EARLY_LOGE*. These versions have to be used explicitly in the early startup code only, before heap allocator and syscalls have been initialized. Normal ESP_LOGx macros can also be used while compiling the bootloader, but they will fall back to the same implementation as ESP_EARLY_LOGx macros.

To override default verbosity level at file or component scope, define the LOG_LOCAL_LEVEL macro.

At file scope, define it before including esp_log.h, e.g.:

```
#define LOG_LOCAL_LEVEL ESP_LOG_VERBOSE
#include "esp_log.h"
```

At component scope, define it in the component makefile:

```
CFLAGS += -D LOG_LOCAL_LEVEL=ESP_LOG_DEBUG
```

To configure logging output per module at runtime, add calls to the function *esp_log_level_set()* as follows:

```
esp_log_level_set("*", ESP_LOG_ERROR);        // set all components to ERROR level
esp_log_level_set("wifi", ESP_LOG_WARN);      // enable WARN logs from WiFi stack
esp_log_level_set("dhcpc", ESP_LOG_INFO);     // enable INFO logs from DHCP client
```

Logging to Host via JTAG By default, the logging library uses the vprintf-like function to write formatted output to the dedicated UART. By calling a simple API, all log output may be routed to JTAG instead, making logging several times faster. For details, please refer to Section 记录日志到主机.

Application Example

The logging library is commonly used by most esp-idf components and examples. For demonstration of log functionality, check ESP-IDF's examples directory. The most revelant examples that deal with logging are the following:

- system/ota
- storage/sd_card
- protocols/https_request

API Reference

Header File

- log/include/esp_log.h

Functions

void **esp_log_level_set**(**const** char *tag, *esp_log_level_t level*)

Set log level for given tag.

If logging for given component has already been enabled, changes previous setting.

Note that this function can not raise log level above the level set using CONFIG_LOG_DEFAULT_LEVEL setting in menuconfig.

To raise log level above the default one for a given file, define LOG_LOCAL_LEVEL to one of the ESP_LOG_* values, before including esp_log.h in this file.

Parameters

- `tag`: Tag of the log entries to enable. Must be a non-NULL zero terminated string. Value "*" resets log level for all tags to the given value.
- `level`: Selects log level to enable. Only logs at this and lower verbosity levels will be shown.

vprintf_like_t **esp_log_set_vprintf**(*vprintf_like_t func*)

Set function used to output log entries.

By default, log output goes to UART0. This function can be used to redirect log output to some other destination, such as file or network. Returns the original log handler, which may be necessary to return output to the previous destination.

Return func old Function used for output.

Parameters

- `func`: new Function used for output. Must have same signature as vprintf.

uint32_t **esp_log_timestamp**(void)

Function which returns timestamp to be used in log output.

This function is used in expansion of ESP_LOGx macros. In the 2nd stage bootloader, and at early application startup stage this function uses CPU cycle counter as time source. Later when FreeRTOS scheduler start running, it switches to FreeRTOS tick count.

For now, we ignore millisecond counter overflow.

Return timestamp, in milliseconds

char *esp_log_system_timestamp(void)
Function which returns system timestamp to be used in log output.

This function is used in expansion of ESP_LOGx macros to print the system time as "HH:MM:SS.sss". The system time is initialized to 0 on startup, this can be set to the correct time with an SNTP sync, or manually with standard POSIX time functions.

Currently this will not get used in logging from binary blobs (i.e WiFi & Bluetooth libraries), these will still print the RTOS tick time.

Return timestamp, in "HH:MM:SS.sss"

uint32_t esp_log_early_timestamp(void)
Function which returns timestamp to be used in log output.

This function uses HW cycle counter and does not depend on OS, so it can be safely used after application crash.

Return timestamp, in milliseconds

void esp_log_write(*esp_log_level_t level*, const char *tag, const char *format, ...)
Write message into the log.

This function is not intended to be used directly. Instead, use one of ESP_LOGE, ESP_LOGW, ESP_LOGI, ESP_LOGD, ESP_LOGV macros.

This function or these macros should not be used from an interrupt.

void esp_log_writev(*esp_log_level_t level*, const char *tag, const char *format, va_list *args*)
Write message into the log, va_list variant.

This function is provided to ease integration toward other logging framework, so that esp_log can be used as a log sink.

See esp_log_write()

Macros

ESP_LOG_BUFFER_HEX_LEVEL(tag, buffer, buff_len, level)
Log a buffer of hex bytes at specified level, separated into 16 bytes each line.

Parameters
- `tag`: description tag
- `buffer`: Pointer to the buffer array
- `buff_len`: length of buffer in bytes
- `level`: level of the log

ESP_LOG_BUFFER_CHAR_LEVEL(tag, buffer, buff_len, level)
Log a buffer of characters at specified level, separated into 16 bytes each line. Buffer should contain only printable characters.

Parameters
- `tag`: description tag
- `buffer`: Pointer to the buffer array
- `buff_len`: length of buffer in bytes
- `level`: level of the log

ESP_LOG_BUFFER_HEXDUMP(tag, buffer, buff_len, level)
Dump a buffer to the log at specified level.

The dump log shows just like the one below:

```
 W (195) log_example: 0x3ffb4280   45 53 50 33 32 20 69 73  20 67 72 65 61 74␣
↪2c 20  |ESP32 is great, |
 W (195) log_example: 0x3ffb4290   77 6f 72 6b 69 6e 67 20  61 6c 6f 6e 67 20␣
↪77 69  |working along wi|
 W (205) log_example: 0x3ffb42a0   74 68 20 74 68 65 20 49  44 46 2e 00       ␣
↪       |th the IDF..|
```

It is highly recommend to use terminals with over 102 text width.

Parameters
- `tag`: description tag
- `buffer`: Pointer to the buffer array
- `buff_len`: length of buffer in bytes
- `level`: level of the log

ESP_LOG_BUFFER_HEX(tag, buffer, buff_len)
Log a buffer of hex bytes at Info level.

See `esp_log_buffer_hex_level`
Parameters
- `tag`: description tag
- `buffer`: Pointer to the buffer array
- `buff_len`: length of buffer in bytes

ESP_LOG_BUFFER_CHAR(tag, buffer, buff_len)
Log a buffer of characters at Info level. Buffer should contain only printable characters.

See `esp_log_buffer_char_level`
Parameters
- `tag`: description tag
- `buffer`: Pointer to the buffer array
- `buff_len`: length of buffer in bytes

ESP_EARLY_LOGE(tag, format, ...)
macro to output logs in startup code, before heap allocator and syscalls have been initialized. log at `ESP_LOG_ERROR` level.

See `printf`,`ESP_LOGE`

ESP_EARLY_LOGW(tag, format, ...)
macro to output logs in startup code at `ESP_LOG_WARN` level.

See `ESP_EARLY_LOGE`,`ESP_LOGE`, `printf`

ESP_EARLY_LOGI(tag, format, ...)
macro to output logs in startup code at `ESP_LOG_INFO` level.

See `ESP_EARLY_LOGE`,`ESP_LOGE`, `printf`

ESP_EARLY_LOGD(tag, format, ...)
macro to output logs in startup code at `ESP_LOG_DEBUG` level.

See `ESP_EARLY_LOGE`,`ESP_LOGE`, `printf`

ESP_EARLY_LOGV(tag, format, ...)
macro to output logs in startup code at `ESP_LOG_VERBOSE` level.

See `ESP_EARLY_LOGE`,`ESP_LOGE`, `printf`

ESP_LOG_EARLY_IMPL(tag, format, log_level, log_tag_letter, ...)

ESP_LOGE(tag, format, ...)

ESP_LOGW(tag, format, ...)

ESP_LOGI(tag, format, ...)

ESP_LOGD(tag, format, ...)

ESP_LOGV(tag, format, ...)

ESP_LOG_LEVEL(level, tag, format, ...)
runtime macro to output logs at a specified level.

See `printf`
Parameters

- `tag`: tag of the log, which can be used to change the log level by `esp_log_level_set` at runtime.
- `level`: level of the output log.
- `format`: format of the output log. see `printf`
- `...`: variables to be replaced into the log. see `printf`

ESP_LOG_LEVEL_LOCAL (level, tag, format, ...)
runtime macro to output logs at a specified level. Also check the level with `LOG_LOCAL_LEVEL`.

See `printf`, `ESP_LOG_LEVEL`

ESP_DRAM_LOGE (tag, format, ...)
Macro to output logs when the cache is disabled. log at `ESP_LOG_ERROR` level.

Similar to `ESP_EARLY_LOGE`, the log level cannot be changed by `esp_log_level_set`.

Usage: `ESP_DRAM_LOGE(DRAM_STR("my_tag"), "format",` or`ESP_DRAM_LOGE(TAG, "format" , ⋯)`‘, where TAG is a char* that points to a str in the DRAM.

Note Placing log strings in DRAM reduces available DRAM, so only use when absolutely essential.
See `esp_rom_printf`,`ESP_LOGE`

ESP_DRAM_LOGW (tag, format, ...)
macro to output logs when the cache is disabled at `ESP_LOG_WARN` level.

See `ESP_DRAM_LOGW`,`ESP_LOGW`, `esp_rom_printf`

ESP_DRAM_LOGI (tag, format, ...)
macro to output logs when the cache is disabled at `ESP_LOG_INFO` level.

See `ESP_DRAM_LOGI`,`ESP_LOGI`, `esp_rom_printf`

ESP_DRAM_LOGD (tag, format, ...)
macro to output logs when the cache is disabled at `ESP_LOG_DEBUG` level.

See `ESP_DRAM_LOGD`,`ESP_LOGD`, `esp_rom_printf`

ESP_DRAM_LOGV (tag, format, ...)
macro to output logs when the cache is disabled at `ESP_LOG_VERBOSE` level.

See `ESP_DRAM_LOGV`,`ESP_LOGV`, `esp_rom_printf`

Type Definitions

typedef int (***vprintf_like_t**)(**const** char *, va_list)

Enumerations

enum esp_log_level_t
Log level.

Values:

ESP_LOG_NONE
No log output

ESP_LOG_ERROR
Critical errors, software module can not recover on its own

ESP_LOG_WARN
Error conditions from which recovery measures have been taken

ESP_LOG_INFO
Information messages which describe normal flow of events

ESP_LOG_DEBUG
Extra information which is not necessary for normal use (values, pointers, sizes, etc).

ESP_LOG_VERBOSE
Bigger chunks of debugging information, or frequent messages which can potentially flood the output.

2.7.20 Miscellaneous System APIs

Software reset

To perform software reset of the chip, `esp_restart()` function is provided. When the function is called, execution of the program will stop, both CPUs will be reset, application will be loaded by the bootloader and started again.

Additionally, `esp_register_shutdown_handler()` function is provided to register a routine which needs to be called prior to restart (when done by `esp_restart()`). This is similar to the functionality of `atexit` POSIX function.

Reset reason

ESP-IDF application can be started or restarted due to a variety of reasons. To get the last reset reason, call `esp_reset_reason()` function. See description of `esp_reset_reason_t` for the list of possible reset reasons.

Heap memory

Two heap memory related functions are provided:

- `esp_get_free_heap_size()` returns the current size of free heap memory
- `esp_get_minimum_free_heap_size()` returns the minimum size of free heap memory that was available during program execution.

Note that ESP-IDF supports multiple heaps with different capabilities. Functions mentioned in this section return the size of heap memory which can be allocated using `malloc` family of functions. For further information about heap memory see *Heap Memory Allocation*.

Random number generation

ESP32 contains a hardware random number generator, values from it can be obtained using `esp_random()`.

When Wi-Fi or Bluetooth are enabled, numbers returned by hardware random number generator (RNG) can be considered true random numbers. Without Wi-Fi or Bluetooth enabled, hardware RNG is a pseudo-random number generator. At startup, ESP-IDF bootloader seeds the hardware RNG with entropy, but care must be taken when reading random values between the start of `app_main` and initialization of Wi-Fi or Bluetooth drivers.

MAC Address

These APIs allow querying and customizing MAC addresses for different network interfaces that supported (e.g. Wi-Fi, Bluetooth, Ethernet).

In ESP-IDF these addresses are calculated from *Base MAC address*. Base MAC address can be initialized with factory-programmed value from internal eFuse, or with a user-defined value. In addition to setting the base MAC address, applications can specify the way in which MAC addresses are allocated to devices. See *Number of universally administered MAC address* section for more details.

Base MAC address To fetch MAC address for a specific interface (e.g. Wi-Fi, Bluetooth, Ethernet), you can simply use *esp_read_mac()* function.

By default, this function takes the eFuse value burned at a pre-defined block (e.g. BLK0 for ESP32, BLK1 for ESP32-S2) as the base MAC address. Per-interface MAC addresses will be calculated according to the table above.

Applications who want to customize base MAC address (not the one provided by Espressif) should call *esp_base_mac_addr_set()* before *esp_read_mac()*. The customized MAC address can be stored in any supported storage device (e.g. Flash, NVS, etc).

Note that, calls to *esp_base_mac_addr_set()* should take place before the initialization of network stack, for example, early in `app_main`.

Custom MAC address in eFuse To facilitate the usage of custom MAC addresses, ESP-IDF provides *esp_efuse_mac_get_custom()* function, which loads MAC address from internal pre-defined eFuse block (e.g. BLK3 for ESP32). This function assumes that custom MAC address is stored in the following format:

Field	# of bits	Range of bits	Notes
Version	8	191:184	0: invalid, others —valid
Reserved	128	183:56	
MAC address	48	55:8	
MAC address CRC	8	7:0	CRC-8-CCITT, polynomial 0x07

Once MAC address has been obtained using *esp_efuse_mac_get_custom()*, call *esp_base_mac_addr_set()* to set this MAC address as base MAC address.

Number of universally administered MAC address Several MAC addresses (universally administered by IEEE) are uniquely assigned to the networking interfaces (Wi-Fi/BT/Ethernet). The final octet of each universally administered MAC address increases by one. Only the first one of them (which is called base MAC address) is stored in eFuse or external storage, the others are generated from it. Here, 'generate' means adding 0, 1, 2 and 3 (respectively) to the final octet of the base MAC address.

If the universally administered MAC addresses are not enough for all of the networking interfaces, locally administered MAC addresses which are derived from universally administered MAC addresses are assigned to the rest of networking interfaces.

See this article for the definition of local and universally administered MAC addresses.

Chip version

esp_chip_info() function fills *esp_chip_info_t* structure with information about the chip. This includes the chip revision, number of CPU cores, and a bit mask of features enabled in the chip.

SDK version

esp_get_idf_version() returns a string describing the IDF version which was used to compile the application. This is the same value as the one available through `IDF_VER` variable of the build system. The version string generally has the format of `git describe` output.

To get the version at build time, additional version macros are provided. They can be used to enable or disable parts of the program depending on IDF version.

- *ESP_IDF_VERSION_MAJOR*, *ESP_IDF_VERSION_MINOR*, *ESP_IDF_VERSION_PATCH* are defined to integers representing major, minor, and patch version.
- *ESP_IDF_VERSION_VAL* and *ESP_IDF_VERSION* can be used when implementing version checks:

```
#include "esp_idf_version.h"

#if ESP_IDF_VERSION >= ESP_IDF_VERSION_VAL(4, 0, 0)
    // enable functionality present in IDF v4.0
#endif
```

App version

Application version is stored in *esp_app_desc_t* structure. It is located in DROM sector and has a fixed offset from the beginning of the binary file. The structure is located after *esp_image_header_t* and *esp_image_segment_header_t* structures. The field version has string type and max length 32 chars.

To set version in your project manually you need to set `PROJECT_VER` variable in your project CMakeLists.txt/Makefile:

- In application CMakeLists.txt put `set(PROJECT_VER "0.1.0.1")` before including `project.cmake`.

(For legacy GNU Make build system: in application Makefile put `PROJECT_VER = "0.1.0.1"` before including `project.mk`.)

If *CONFIG_APP_PROJECT_VER_FROM_CONFIG* option is set, the value of *CONFIG_APP_PROJECT_VER* will be used. Otherwise if `PROJECT_VER` variable is not set in the project then it will be retrieved from either `$(PROJECT_PATH)/version.txt` file (if present) else using git command `git describe`. If neither is available then `PROJECT_VER` will be set to "1". Application can make use of this by calling *esp_ota_get_app_description()* or *esp_ota_get_partition_description()* functions.

API Reference

Header File

- esp_system/include/esp_system.h

Functions

esp_err_t **esp_register_shutdown_handler**(*shutdown_handler_t handle*)

Register shutdown handler.

This function allows you to register a handler that gets invoked before the application is restarted using esp_restart function.

Return

- ESP_OK on success
- ESP_ERR_INVALID_STATE if the handler has already been registered
- ESP_ERR_NO_MEM if no more shutdown handler slots are available

Parameters

- `handle`: function to execute on restart

esp_err_t **esp_unregister_shutdown_handler**(*shutdown_handler_t handle*)

Unregister shutdown handler.

This function allows you to unregister a handler which was previously registered using esp_register_shutdown_handler function.

- ESP_OK on success
- ESP_ERR_INVALID_STATE if the given handler hasn't been registered before

void **esp_restart**(void)

Restart PRO and APP CPUs.

This function can be called both from PRO and APP CPUs. After successful restart, CPU reset reason will be SW_CPU_RESET. Peripherals (except for WiFi, BT, UART0, SPI1, and legacy timers) are not reset. This function does not return.

esp_reset_reason_t **esp_reset_reason**(void)
Get reason of last reset.

Return See description of esp_reset_reason_t for explanation of each value.

uint32_t **esp_get_free_heap_size**(void)
Get the size of available heap.

Note that the returned value may be larger than the maximum contiguous block which can be allocated.

Return Available heap size, in bytes.

uint32_t **esp_get_free_internal_heap_size**(void)
Get the size of available internal heap.

Note that the returned value may be larger than the maximum contiguous block which can be allocated.

Return Available internal heap size, in bytes.

uint32_t **esp_get_minimum_free_heap_size**(void)
Get the minimum heap that has ever been available.

Return Minimum free heap ever available

uint32_t **esp_random**(void)
Get one random 32-bit word from hardware RNG.

The hardware RNG is fully functional whenever an RF subsystem is running (ie Bluetooth or WiFi is enabled). For random values, call this function after WiFi or Bluetooth are started.

If the RF subsystem is not used by the program, the function bootloader_random_enable() can be called to enable an entropy source. bootloader_random_disable() must be called before RF subsystem or I2S peripheral are used. See these functions' documentation for more details.

Any time the app is running without an RF subsystem (or bootloader_random) enabled, RNG hardware should be considered a PRNG. A very small amount of entropy is available due to pre-seeding while the IDF bootloader is running, but this should not be relied upon for any use.

Return Random value between 0 and UINT32_MAX

void **esp_fill_random**(void *_buf_, size_t _len_)
Fill a buffer with random bytes from hardware RNG.

Note This function has the same restrictions regarding available entropy as esp_random()
Parameters
- `buf`: Pointer to buffer to fill with random numbers.
- `len`: Length of buffer in bytes

esp_err_t **esp_base_mac_addr_set**(**const** uint8_t *_mac_)
Set base MAC address with the MAC address which is stored in BLK3 of EFUSE or external storage e.g. flash and EEPROM.

Base MAC address is used to generate the MAC addresses used by the networking interfaces. If using base MAC address stored in BLK3 of EFUSE or external storage, call this API to set base MAC address with the MAC address which is stored in BLK3 of EFUSE or external storage before initializing WiFi/BT/Ethernet.

Note Base MAC must be a unicast MAC (least significant bit of first byte must be zero).
Note If not using a valid OUI, set the "locally administered" bit (bit value 0x02 in the first byte) to avoid collisions.
Return ESP_OK on success ESP_ERR_INVALID_ARG If mac is NULL or is not a unicast MAC
Parameters
- `mac`: base MAC address, length: 6 bytes.

esp_err_t **esp_base_mac_addr_get**(uint8_t *_mac_)
Return base MAC address which is set using esp_base_mac_addr_set.

Return ESP_OK on success ESP_ERR_INVALID_MAC base MAC address has not been set
Parameters
- `mac`: base MAC address, length: 6 bytes.

esp_err_t **esp_efuse_mac_get_custom** (uint8_t *mac)
Return base MAC address which was previously written to BLK3 of EFUSE.

Base MAC address is used to generate the MAC addresses used by the networking interfaces. This API returns the custom base MAC address which was previously written to BLK3 of EFUSE. Writing this EFUSE allows setting of a different (non-Espressif) base MAC address. It is also possible to store a custom base MAC address elsewhere, see esp_base_mac_addr_set() for details.

Return ESP_OK on success ESP_ERR_INVALID_VERSION An invalid MAC version field was read from BLK3 of EFUSE ESP_ERR_INVALID_CRC An invalid MAC CRC was read from BLK3 of EFUSE

Parameters

- `mac`: base MAC address, length: 6 bytes.

esp_err_t **esp_efuse_mac_get_default** (uint8_t *mac)
Return base MAC address which is factory-programmed by Espressif in BLK0 of EFUSE.

Return ESP_OK on success

Parameters

- `mac`: base MAC address, length: 6 bytes.

esp_err_t **esp_read_mac** (uint8_t *mac, *esp_mac_type_t* type)
Read base MAC address and set MAC address of the interface.

This function first get base MAC address using esp_base_mac_addr_get or reads base MAC address from BLK0 of EFUSE. Then set the MAC address of the interface including wifi station, wifi softap, bluetooth and ethernet.

Return ESP_OK on success

Parameters

- `mac`: MAC address of the interface, length: 6 bytes.
- `type`: type of MAC address, 0:wifi station, 1:wifi softap, 2:bluetooth, 3:ethernet.

esp_err_t **esp_derive_local_mac** (uint8_t *local_mac, **const** uint8_t *universal_mac)
Derive local MAC address from universal MAC address.

This function derives a local MAC address from an universal MAC address. A `definition of local vs universal MAC address can be found on Wikipedia <>`. In ESP32, universal MAC address is generated from base MAC address in EFUSE or other external storage. Local MAC address is derived from the universal MAC address.

Return ESP_OK on success

Parameters

- `local_mac`: Derived local MAC address, length: 6 bytes.
- `universal_mac`: Source universal MAC address, length: 6 bytes.

void **esp_system_abort** (**const** char *details)
Trigger a software abort.

Parameters

- `details`: Details that will be displayed during panic handling.

void **esp_chip_info** (*esp_chip_info_t* *out_info)
Fill an *esp_chip_info_t* structure with information about the chip.

Parameters

- `[out] out_info`: structure to be filled

Structures

struct esp_chip_info_t
The structure represents information about the chip.

Public Members

esp_chip_model_t **model**
chip model, one of esp_chip_model_t

uint32_t **features**
bit mask of CHIP_FEATURE_x feature flags

uint16_t **full_revision**
chip revision number (in format MXX; where M - wafer major version, XX - wafer minor version)

uint8_t **cores**
number of CPU cores

uint8_t **revision**
chip revision number

Macros

CHIP_FEATURE_EMB_FLASH
Chip has embedded flash memory.

CHIP_FEATURE_WIFI_BGN
Chip has 2.4GHz WiFi.

CHIP_FEATURE_BLE
Chip has Bluetooth LE.

CHIP_FEATURE_BT
Chip has Bluetooth Classic.

Type Definitions

typedef void (***shutdown_handler_t**)(void)
Shutdown handler type

Enumerations

enum esp_mac_type_t
Values:

ESP_MAC_WIFI_STA

ESP_MAC_WIFI_SOFTAP

ESP_MAC_BT

ESP_MAC_ETH

enum esp_reset_reason_t
Reset reasons.

Values:

ESP_RST_UNKNOWN
Reset reason can not be determined.

ESP_RST_POWERON
Reset due to power-on event.

ESP_RST_EXT
Reset by external pin (not applicable for ESP32)

ESP_RST_SW
Software reset via esp_restart.

ESP_RST_PANIC
Software reset due to exception/panic.

ESP_RST_INT_WDT
Reset (software or hardware) due to interrupt watchdog.

ESP_RST_TASK_WDT
Reset due to task watchdog.

ESP_RST_WDT
Reset due to other watchdogs.

ESP_RST_DEEPSLEEP
Reset after exiting deep sleep mode.

ESP_RST_BROWNOUT
Brownout reset (software or hardware)

ESP_RST_SDIO
Reset over SDIO.

enum esp_chip_model_t
Chip models.

Values:

CHIP_ESP32 = 1
ESP32.

CHIP_ESP32S2 = 2
ESP32-S2.

CHIP_ESP32S3 = 4
ESP32-S3.

CHIP_ESP32C3 = 5
ESP32-C3.

Header File

- esp_common/include/esp_idf_version.h

Functions

const char ***esp_get_idf_version**(void)
Return full IDF version string, same as 'git describe' output.

Note If you are printing the ESP-IDF version in a log file or other information, this function provides more information than using the numerical version macros. For example, numerical version macros don't differentiate between development, pre-release and release versions, but the output of this function does.

Return constant string from IDF_VER

Macros

ESP_IDF_VERSION_MAJOR
Major version number (X.x.x)

ESP_IDF_VERSION_MINOR
Minor version number (x.X.x)

ESP_IDF_VERSION_PATCH
Patch version number (x.x.X)

ESP_IDF_VERSION_VAL(major, minor, patch)
Macro to convert IDF version number into an integer

To be used in comparisons, such as ESP_IDF_VERSION >= ESP_IDF_VERSION_VAL(4, 0, 0)

ESP_IDF_VERSION
Current IDF version, as an integer

To be used in comparisons, such as ESP_IDF_VERSION >= ESP_IDF_VERSION_VAL(4, 0, 0)

2.7.21 空中升级 (OTA)

OTA 流程概览

OTA 升级机制可以让设备在固件正常运行时根据接收数据（如通过 Wi-Fi 或蓝牙）进行自我更新。

要运行 OTA 机制，需配置设备的分区表，该分区表至少包括两个 OTA 应用程序分区（即 *ota_0* 和 *ota_1*）和一个 OTA 数据分区。

OTA 功能启动后，向当前未用于启动的 OTA 应用分区写入新的应用固件镜像。镜像验证后，OTA 数据分区更新，指定在下一次启动时使用该镜像。

OTA 数据分区

所有使用 OTA 功能项目，其分区表必须包含一个 OTA 数据分区（类型为 `data`，子类型为 `ota`）。

工厂启动设置下，OTA 数据分区中应没有数据（所有字节擦写成 0xFF）。如果分区表中有工厂应用程序，ESP-IDF 软件引导加载程序会启动工厂应用程序。如果分区表中没有工厂应用程序，则启动第一个可用的 OTA 分区（通常是 `ota_0`）。

第一次 OTA 升级后，OTA 数据分区更新，指定下一次启动哪个 OTA 应用程序分区。

OTA 数据分区是两个 0x2000 字节大小的 flash 扇区，防止写入时电源故障引发问题。两个扇区单独擦除、写入匹配数据，若存在不一致，则用计数器字段判定哪个扇区为最新数据。

应用程序回滚

应用程序回滚的主要目的是确保设备在更新后正常工作。如果新版应用程序出现严重错误，该功能可使设备回滚到之前正常运行的应用版本。在使能回滚并且 OTA 升级应用程序至新版本后，可能出现的结果如下：

- 应用程序运行正常，*esp_ota_mark_app_valid_cancel_rollback()* 将正在运行的应用程序状态标记为 `ESP_OTA_IMG_VALID`，启动此应用程序无限制。
- 应用程序出现严重错误，无法继续工作，必须回滚到此前的版本，*esp_ota_mark_app_invalid_rollback_and_reboot()* 将正在运行的版本标记为 `ESP_OTA_IMG_INVALID` 然后复位。引导加载程序不会选取此版本，而是启动此前正常运行的版本。
- 如果*CONFIG_BOOTLOADER_APP_ROLLBACK_ENABLE* 使能，则无需调用函数便可复位，回滚至之前的应用版本。

注解：应用程序的状态不是写到程序的二进制镜像，而是写到 `otadata` 分区。该分区有一个 `ota_seq` 计数器，该计数器是 OTA 应用分区的指针，指向下次启动时选取应用所在的分区 (ota_0, ota_1, ···)。

应用程序 OTA 状态 状态控制了选取启动应用程序的过程：

状态	引导加载程序选取启动应用程序的限制
ESP_OTA_IMG_VALID	没有限制，可以选取。
ESP_OTA_IMG_UNDEFINED	没有限制，可以选取。
ESP_OTA_IMG_INVALID	不会选取。
ESP_OTA_IMG_ABORTED	不会选取。
ESP_OTA_IMG_NEW	如使能*CONFIG_BOOTLOADER_APP_ROLLBACK_ENABLE*，则仅会选取一次。在引导加载程序中，状态立即变为 `ESP_OTA_IMG_PENDING_VERIFY`。
ESP_OTA_IMG_PENDING_VERIFY	如使能*CONFIG_BOOTLOADER_APP_ROLLBACK_ENABLE*，则不会选取，状态变为 “ESP_OTA_IMG_ABORTED“。

如果*CONFIG_BOOTLOADER_APP_ROLLBACK_ENABLE* 没有使能（默认情况），则*esp_ota_mark_app_valid_cancel_rollback()* 和*esp_ota_mark_app_invalid_rollback_and_reboot* 为可选功能，ESP_OTA_IMG_NEW 和 ESP_OTA_IMG_PENDING_VERIFY 不会使用。

Kconfig 中的*CONFIG_BOOTLOADER_APP_ROLLBACK_ENABLE* 可以帮助用户追踪新版应用程序的第一次启动。应用程序需调用*esp_ota_mark_app_valid_cancel_rollback()* 函数确认可以运行，否则将会在重启时回滚至旧版本。该功能可让用户在启动阶段控制应用程序的可操作性。新版应用程序仅有一次机会尝试是否能成功启动。

回滚过程 *CONFIG_BOOTLOADER_APP_ROLLBACK_ENABLE* 使能时，回滚过程如下：

- 新版应用程序下载成功，*esp_ota_set_boot_partition()* 函数将分区设为可启动，状态设为 ESP_OTA_IMG_NEW。该状态表示应用程序为新版本，第一次启动需要监测。
- 重新启动*esp_restart()*。
- 引导加载程序检查 ESP_OTA_IMG_PENDING_VERIFY 状态，如有设置，则将其写入 ESP_OTA_IMG_ABORTED。
- 引导加载程序选取一个新版应用程序来引导，这样应用程序状态就不会设置为 ESP_OTA_IMG_INVALID 或 ESP_OTA_IMG_ABORTED。
- 引导加载程序检查所选取的新版应用程序，若状态设置为 ESP_OTA_IMG_NEW，则写入 ESP_OTA_IMG_PENDING_VERIFY。该状态表示，需确认应用程序的可操作性，如不确认，发生重启，则状态会重写为 ESP_OTA_IMG_ABORTED （见上文），该应用程序不可再启动，将回滚至上一版本。
- 新版应用程序启动，应进行自测。
- 若通过自测，则必须调用函数*esp_ota_mark_app_valid_cancel_rollback()*，因为新版应用程序在等待确认其可操作性 (ESP_OTA_IMG_PENDING_VERIFY 状态)。
- 若未通过自测，则调用函数*esp_ota_mark_app_invalid_rollback_and_reboot()*，回滚至之前能正常工作的应用程序版本，同时将无效的新版本应用程序设置为 ESP_OTA_IMG_INVALID。
- 如果新版应用程序可操作性没有确认，则状态一直为 ESP_OTA_IMG_PENDING_VERIFY。下一次启动时，状态变更为 ESP_OTA_IMG_ABORTED，阻止其再次启动，之后回滚到之前的版本。

意外复位 如果在新版应用第一次启动时发生断电或意外崩溃，则会回滚至之前正常运行的版本。

建议：尽快完成自测，防止因断电回滚。

只有 OTA 分区可以回滚。工厂分区不会回滚。

启动无效/中止的应用程序 用户可以启动此前设置为 ESP_OTA_IMG_INVALID 或 ESP_OTA_IMG_ABORTED 的应用程序：

- 获取最后一个无效应用分区*esp_ota_get_last_invalid_partition()*。
- 将获取的分区传递给*esp_ota_set_boot_partition()*，更新 otadata。
- 重启*esp_restart()*。引导加载程序会启动指定应用程序。

要确定是否在应用程序启动时进行自测，可以调用*esp_ota_get_state_partition()* 函数。如果结果为 ESP_OTA_IMG_PENDING_VERIFY，则需要自测，后续确认应用程序的可操作性。

如何设置状态 下文简单描述了如何设置应用程序状态：

- ESP_OTA_IMG_VALID 由函数*esp_ota_mark_app_valid_cancel_rollback()* 设置。
- 如果*CONFIG_BOOTLOADER_APP_ROLLBACK_ENABLE* 没有使能，ESP_OTA_IMG_UNDEFINED 由函数*esp_ota_set_boot_partition()* 设置。
- 如果*CONFIG_BOOTLOADER_APP_ROLLBACK_ENABLE* 没有使能，ESP_OTA_IMG_NEW 由函数*esp_ota_set_boot_partition()* 设置。
- ESP_OTA_IMG_INVALID 由函数*esp_ota_mark_app_invalid_rollback_and_reboot()* 设置。
- 如果应用程序的可操作性无法确认，发生重启（*CONFIG_BOOTLOADER_APP_ROLLBACK_ENABLE* 使能），则设置 ESP_OTA_IMG_ABORTED。
- 如果*CONFIG_BOOTLOADER_APP_ROLLBACK_ENABLE* 使能，选取的应用程序状态为 ESP_OTA_IMG_NEW，则在引导加载程序中设置 ESP_OTA_IMG_PENDING_VERIFY。

防回滚

防回滚机制可以防止回滚到安全版本号低于芯片 eFuse 中烧录程序的应用程序版本。

设置*CONFIG_BOOTLOADER_APP_ANTI_ROLLBACK*，启动防回滚机制。在引导加载程序中选取可启动的应用程序，会额外检查芯片和应用程序镜像的安全版本号。可启动固件中的应用安全版本号必须等于或高于芯片中的应用安全版本号。

CONFIG_BOOTLOADER_APP_ANTI_ROLLBACK 和*CONFIG_BOOTLOADER_APP_ROLLBACK_ENABLE* 一起使用。此时，只有安全版本号等于或高于芯片中的应用安全版本号时才会回滚。

典型的防回滚机制

- 新发布的固件解决了此前版本的安全问题。
- 开发者在确保固件可以运行之后，增加安全版本号，发布固件。
- 下载新版应用程序。
- 运行函数*esp_ota_set_boot_partition()*，将新版应用程序设为可启动。如果新版应用程序的安全版本号低于芯片中的应用安全版本号，新版应用程序会被擦除，无法更新到新固件。
- 重新启动。
- 在引导加载程序中选取安全版本号等于或高于芯片中应用安全版本号的应用程序。如果 otadata 处于初始阶段，通过串行通道加载了安全版本号高于芯片中应用安全版本号的固件，则引导加载程序中 eFuse 的安全版本号会立即更新。
- 新版应用程序启动，之后进行可操作性检测，如果通过检测，则调用函数*esp_ota_mark_app_valid_cancel_rollback()*，将应用程序标记为 ESP_OTA_IMG_VALID，更新芯片中应用程序的安全版本号。注意，如果调用函数*esp_ota_mark_app_invalid_rollback_and_reboot()*，可能会因为设备中没有可启动的应用程序而回滚失败，返回 ESP_ERR_OTA_ROLLBACK_FAILED 错误，应用程序状态一直为 ESP_OTA_IMG_PENDING_VERIFY。
- 如果运行的应用程序处于 ESP_OTA_IMG_VALID 状态，则可再次更新。

建议：

如果想避免因服务器应用程序的安全版本号低于运行的应用程序，造成不必要的下载和擦除，必须从镜像的第一个包中获取 new_app_info.secure_version，和 eFuse 的安全版本号比较。如果 esp_efuse_check_secure_version(new_app_info.secure_version) 函数为真，则下载继续，反之则中断。

```
....
bool image_header_was_checked = false;
while (1) {
    int data_read = esp_http_client_read(client, ota_write_data, BUFFSIZE);
    ...
    if (data_read > 0) {
        if (image_header_was_checked == false) {
            esp_app_desc_t new_app_info;
            if (data_read > sizeof(esp_image_header_t) + sizeof(esp_image_segment_
↪header_t) + sizeof(esp_app_desc_t)) {
                // check current version with downloading
                if (esp_efuse_check_secure_version(new_app_info.secure_version) ==␣
↪false) {
                    ESP_LOGE(TAG, "This a new app can not be downloaded due to a␣
↪secure version is lower than stored in efuse.");
                    http_cleanup(client);
                    task_fatal_error();
                }

                image_header_was_checked = true;

                esp_ota_begin(update_partition, OTA_SIZE_UNKNOWN, &update_handle);
            }
        }
```

(下页继续)

(续上页)

```
        esp_ota_write( update_handle, (const void *)ota_write_data, data_read);
    }
}
...
```

限制：

- secure_version 字段最多有 32 位。也就是说，防回滚最多可以做 32 次。用户可以使用*CONFIG_BOOTLOADER_APP_SEC_VER_SIZE_EFUSE_FIELD* 减少该 eFuse 字段的长度。
- 防回滚仅在 eFuse 编码机制设置为 NONE 时生效。
- 分区表不应有工厂分区，应仅有两个应用程序分区。

security_version:

- 存储在应用程序镜像中的 esp_app_desc 里。版本号用*CONFIG_BOOTLOADER_APP_SECURE_VERSION* 设置。
- ESP32 中版本号存储在 eFuse 的 EFUSE_BLK3_RDATA4_REG 里（若 eFuse 的位烧写为 1，则永远无法恢复为 0）。寄存器设置了多少位，应用程序的安全版本号就为多少。

没有安全启动的安全 OTA 升级

即便硬件安全启动没有使能，也可验证已签名的 OTA 升级。可通过设置*CONFIG_SECURE_SIGNED_APPS_NO_SECURE_BOOT* 和*CONFIG_SECURE_SIGNED_ON_UPDATE_NO_SECURE_BOOT* 实现。

具体可参考*Signed App Verification Without Hardware Secure Boot*。

OTA 工具 (otatool.py)

app_update 组件中有 otatool.py 工具，用于在目标设备上完成下列 OTA 分区相关操作：

- 读取 otadata 分区 (read_otadata)
- 擦除 otadata 分区，将设备复位至工厂应用程序 (erase_otadata)
- 切换 OTA 分区 (switch_ota_partition)
- 擦除 OTA 分区 (erase_ota_partition)
- 写入 OTA 分区 (write_ota_partition)
- 读取 OTA 分区 (read_ota_partition)

用户若想通过编程方式完成相关操作，可从另一个 Python 脚本导入并使用该 OTA 工具，或者从 Shell 脚本调用该 OTA 工具。前者可使用工具的 Python API，后者可使用命令行界面。

Python API 首先，确保已导入 *otatool* 模块。

```
import sys
import os

idf_path = os.environ["IDF_PATH"]  # 从环境中获取 IDF_PATH 的值
otatool_dir = os.path.join(idf_path, "components", "app_update")  # otatool.py 位于
↪$IDF_PATH/components/app_update 下

sys.path.append(otatool_dir)  # 使能 Python 寻找 otatool 模块
from otatool import *  # 导入 otatool 模块内的所有名称
```

要使用 OTA 工具的 Python API，第一步是创建 *OtatoolTarget* 对象：

```
# 创建 partool.py 的目标设备，并将目标设备连接到串行端口 /dev/ttyUSB1
target = OtatoolTarget("/dev/ttyUSB1")
```

现在，可使用创建的 *OtatoolTarget* 在目标设备上完成操作：

```
# 擦除 otadata，将设备复位至工厂应用程序
target.erase_otadata()

# 擦除 OTA 应用程序分区 0
target.erase_ota_partition(0)

# 将启动分区切换至 OTA 应用程序分区 1
target.switch_ota_partition(1)

# 读取 OTA 分区 'ota_3'，将内容保存至文件 'ota_3.bin'
target.read_ota_partition("ota_3", "ota_3.bin")
```

要操作的 OTA 分区通过应用程序分区序号或分区名称指定。

更多关于 Python API 的信息，请查看 OTA 工具的代码注释。

命令行界面 *otatool.py* 的命令行界面具有如下结构：

```
otatool.py [command-args] [subcommand] [subcommand-args]

- command-args - 执行主命令 (otatool.py) 所需的实际参数，多与目标设备有关
- subcommand - 要执行的操作
- subcommand-args - 所选操作的实际参数
```

```
# 擦除 otadata，将设备复位至工厂应用程序
otatool.py --port "/dev/ttyUSB1" erase_otadata

# 擦除 OTA 应用程序分区 0
otatool.py --port "/dev/ttyUSB1" erase_ota_partition --slot 0

# 将启动分区切换至 OTA 应用程序分区 1
otatool.py --port "/dev/ttyUSB1" switch_ota_partition --slot 1

# 读取 OTA 分区 'ota_3'，将内容保存至文件 'ota_3.bin'
otatool.py --port "/dev/ttyUSB1" read_ota_partition --name=ota_3 --output=ota_3.bin
```

更多信息可用 *–help* 指令查看：

```
# 显示可用的子命令和主命令描述
otatool.py --help

# 显示子命令的描述
otatool.py [subcommand] --help
```

相关文档

- 分区表
- *SPI Flash 和分区 API*
- *ESP HTTPS OTA*

应用程序示例

端对端的 OTA 固件升级示例请参考 system/ota。

API 参考

Header File

- app_update/include/esp_ota_ops.h

Functions

const *esp_app_desc_t* ***esp_ota_get_app_description**(void)

Return esp_app_desc structure. This structure includes app version.

Return description for running app.

Return Pointer to esp_app_desc structure.

int **esp_ota_get_app_elf_sha256**(char *_dst_, size_t _size_)

Fill the provided buffer with SHA256 of the ELF file, formatted as hexadecimal, null-terminated. If the buffer size is not sufficient to fit the entire SHA256 in hex plus a null terminator, the largest possible number of bytes will be written followed by a null.

Return Number of bytes written to dst (including null terminator)

Parameters

- `dst`: Destination buffer
- `size`: Size of the buffer

esp_err_t **esp_ota_begin**(**const** *esp_partition_t* *_partition_, size_t _image_size_, *esp_ota_handle_t* *_out_handle_)

Commence an OTA update writing to the specified partition.

The specified partition is erased to the specified image size.

If image size is not yet known, pass OTA_SIZE_UNKNOWN which will cause the entire partition to be erased.

On success, this function allocates memory that remains in use until esp_ota_end() is called with the returned handle.

Note: If the rollback option is enabled and the running application has the ESP_OTA_IMG_PENDING_VERIFY state then it will lead to the ESP_ERR_OTA_ROLLBACK_INVALID_STATE error. Confirm the running app before to run download a new app, use esp_ota_mark_app_valid_cancel_rollback() function for it (this should be done as early as possible when you first download a new application).

Return

- ESP_OK: OTA operation commenced successfully.
- ESP_ERR_INVALID_ARG: partition or out_handle arguments were NULL, or partition doesn't point to an OTA app partition.
- ESP_ERR_NO_MEM: Cannot allocate memory for OTA operation.
- ESP_ERR_OTA_PARTITION_CONFLICT: Partition holds the currently running firmware, cannot update in place.
- ESP_ERR_NOT_FOUND: Partition argument not found in partition table.
- ESP_ERR_OTA_SELECT_INFO_INVALID: The OTA data partition contains invalid data.
- ESP_ERR_INVALID_SIZE: Partition doesn't fit in configured flash size.
- ESP_ERR_FLASH_OP_TIMEOUT or ESP_ERR_FLASH_OP_FAIL: Flash write failed.
- ESP_ERR_OTA_ROLLBACK_INVALID_STATE: If the running app has not confirmed state. Before performing an update, the application must be valid.

Parameters

- `partition`: Pointer to info for partition which will receive the OTA update. Required.
- `image_size`: Size of new OTA app image. Partition will be erased in order to receive this size of image. If 0 or OTA_SIZE_UNKNOWN, the entire partition is erased.
- `out_handle`: On success, returns a handle which should be used for subsequent esp_ota_write() and esp_ota_end() calls.

esp_err_t **esp_ota_write**(*esp_ota_handle_t* _handle_, **const** void *_data_, size_t _size_)

Write OTA update data to partition.

This function can be called multiple times as data is received during the OTA operation. Data is written sequentially to the partition.

Return

- ESP_OK: Data was written to flash successfully.

- ESP_ERR_INVALID_ARG: handle is invalid.
- ESP_ERR_OTA_VALIDATE_FAILED: First byte of image contains invalid app image magic byte.
- ESP_ERR_FLASH_OP_TIMEOUT or ESP_ERR_FLASH_OP_FAIL: Flash write failed.
- ESP_ERR_OTA_SELECT_INFO_INVALID: OTA data partition has invalid contents

Parameters

- `handle`: Handle obtained from esp_ota_begin
- `data`: Data buffer to write
- `size`: Size of data buffer in bytes.

esp_err_t **esp_ota_write_with_offset**(*esp_ota_handle_t handle*, **const** void **data*, size_t *size*, uint32_t *offset*)

Write OTA update data to partition.

This function can write data in non contiguous manner. If flash encryption is enabled, data should be 16 byte aligned.

Note While performing OTA, if the packets arrive out of order, esp_ota_write_with_offset() can be used to write data in non contiguous manner. Use of esp_ota_write_with_offset() in combination with esp_ota_write() is not recommended.

Return

- ESP_OK: Data was written to flash successfully.
- ESP_ERR_INVALID_ARG: handle is invalid.
- ESP_ERR_OTA_VALIDATE_FAILED: First byte of image contains invalid app image magic byte.
- ESP_ERR_FLASH_OP_TIMEOUT or ESP_ERR_FLASH_OP_FAIL: Flash write failed.
- ESP_ERR_OTA_SELECT_INFO_INVALID: OTA data partition has invalid contents

Parameters

- `handle`: Handle obtained from esp_ota_begin
- `data`: Data buffer to write
- `size`: Size of data buffer in bytes
- `offset`: Offset in flash partition

esp_err_t **esp_ota_end**(*esp_ota_handle_t handle*)

Finish OTA update and validate newly written app image.

Note After calling esp_ota_end(), the handle is no longer valid and any memory associated with it is freed (regardless of result).

Return

- ESP_OK: Newly written OTA app image is valid.
- ESP_ERR_NOT_FOUND: OTA handle was not found.
- ESP_ERR_INVALID_ARG: Handle was never written to.
- ESP_ERR_OTA_VALIDATE_FAILED: OTA image is invalid (either not a valid app image, or - if secure boot is enabled - signature failed to verify.)
- ESP_ERR_INVALID_STATE: If flash encryption is enabled, this result indicates an internal error writing the final encrypted bytes to flash.

Parameters

- `handle`: Handle obtained from esp_ota_begin().

esp_err_t **esp_ota_abort**(*esp_ota_handle_t handle*)

Abort OTA update, free the handle and memory associated with it.

Return

- ESP_OK: Handle and its associated memory is freed successfully.
- ESP_ERR_NOT_FOUND: OTA handle was not found.

Parameters

- `handle`: obtained from esp_ota_begin().

esp_err_t **esp_ota_set_boot_partition**(**const** *esp_partition_t *partition*)

Configure OTA data for a new boot partition.

Note If this function returns ESP_OK, calling esp_restart() will boot the newly configured app partition.

Return

- ESP_OK: OTA data updated, next reboot will use specified partition.

- ESP_ERR_INVALID_ARG: partition argument was NULL or didn't point to a valid OTA partition of type "app".
- ESP_ERR_OTA_VALIDATE_FAILED: Partition contained invalid app image. Also returned if secure boot is enabled and signature validation failed.
- ESP_ERR_NOT_FOUND: OTA data partition not found.
- ESP_ERR_FLASH_OP_TIMEOUT or ESP_ERR_FLASH_OP_FAIL: Flash erase or write failed.

Parameters

- `partition`: Pointer to info for partition containing app image to boot.

const *esp_partition_t* ***esp_ota_get_boot_partition**(void)

Get partition info of currently configured boot app.

If esp_ota_set_boot_partition() has been called, the partition which was set by that function will be returned.

If esp_ota_set_boot_partition() has not been called, the result is usually the same as esp_ota_get_running_partition(). The two results are not equal if the configured boot partition does not contain a valid app (meaning that the running partition will be an app that the bootloader chose via fallback).

If the OTA data partition is not present or not valid then the result is the first app partition found in the partition table. In priority order, this means: the factory app, the first OTA app slot, or the test app partition.

Note that there is no guarantee the returned partition is a valid app. Use esp_image_verify(ESP_IMAGE_VERIFY, ···) to verify if the returned partition contains a bootable image.

Return Pointer to info for partition structure, or NULL if partition table is invalid or a flash read operation failed. Any returned pointer is valid for the lifetime of the application.

const *esp_partition_t* ***esp_ota_get_running_partition**(void)

Get partition info of currently running app.

This function is different to esp_ota_get_boot_partition() in that it ignores any change of selected boot partition caused by esp_ota_set_boot_partition(). Only the app whose code is currently running will have its partition information returned.

The partition returned by this function may also differ from esp_ota_get_boot_partition() if the configured boot partition is somehow invalid, and the bootloader fell back to a different app partition at boot.

Return Pointer to info for partition structure, or NULL if no partition is found or flash read operation failed. Returned pointer is valid for the lifetime of the application.

const *esp_partition_t* ***esp_ota_get_next_update_partition**(**const** *esp_partition_t* **start_from*)

Return the next OTA app partition which should be written with a new firmware.

Call this function to find an OTA app partition which can be passed to esp_ota_begin().

Finds next partition round-robin, starting from the current running partition.

Return Pointer to info for partition which should be updated next. NULL result indicates invalid OTA data partition, or that no eligible OTA app slot partition was found.

Parameters

- `start_from`: If set, treat this partition info as describing the current running partition. Can be NULL, in which case esp_ota_get_running_partition() is used to find the currently running partition. The result of this function is never the same as this argument.

esp_err_t **esp_ota_get_partition_description**(**const** *esp_partition_t* **partition*, *esp_app_desc_t* **app_desc*)

Returns esp_app_desc structure for app partition. This structure includes app version.

Returns a description for the requested app partition.

Return

- ESP_OK Successful.
- ESP_ERR_NOT_FOUND app_desc structure is not found. Magic word is incorrect.
- ESP_ERR_NOT_SUPPORTED Partition is not application.

- ESP_ERR_INVALID_ARG Arguments is NULL or if partition’ s offset exceeds partition size.
- ESP_ERR_INVALID_SIZE Read would go out of bounds of the partition.
- or one of error codes from lower-level flash driver.

Parameters

- `[in] partition`: Pointer to app partition. (only app partition)
- `[out] app_desc`: Structure of info about app.

esp_err_t **esp_ota_mark_app_valid_cancel_rollback**(void)

This function is called to indicate that the running app is working well.

Return

- ESP_OK: if successful.

esp_err_t **esp_ota_mark_app_invalid_rollback_and_reboot**(void)

This function is called to roll back to the previously workable app with reboot.

If rollback is successful then device will reset else API will return with error code. Checks applications on a flash drive that can be booted in case of rollback. If the flash does not have at least one app (except the running app) then rollback is not possible.

Return

- ESP_FAIL: if not successful.
- ESP_ERR_OTA_ROLLBACK_FAILED: The rollback is not possible due to flash does not have any apps.

const *esp_partition_t* ***esp_ota_get_last_invalid_partition**(void)

Returns last partition with invalid state (ESP_OTA_IMG_INVALID or ESP_OTA_IMG_ABORTED).

Return partition.

esp_err_t **esp_ota_get_state_partition**(**const** *esp_partition_t* **partition*, esp_ota_img_states_t **ota_state*)

Returns state for given partition.

Return

- ESP_OK: Successful.
- ESP_ERR_INVALID_ARG: partition or ota_state arguments were NULL.
- ESP_ERR_NOT_SUPPORTED: partition is not ota.
- ESP_ERR_NOT_FOUND: Partition table does not have otadata or state was not found for given partition.

Parameters

- `[in] partition`: Pointer to partition.
- `[out] ota_state`: state of partition (if this partition has a record in otadata).

esp_err_t **esp_ota_erase_last_boot_app_partition**(void)

Erase previous boot app partition and corresponding otadata select for this partition.

When current app is marked to as valid then you can erase previous app partition.

Return

- ESP_OK: Successful, otherwise ESP_ERR.

bool **esp_ota_check_rollback_is_possible**(void)

Checks applications on the slots which can be booted in case of rollback.

These applications should be valid (marked in otadata as not UNDEFINED, INVALID or ABORTED and crc is good) and be able booted, and secure_version of app >= secure_version of efuse (if anti-rollback is enabled).

Return

- True: Returns true if the slots have at least one app (except the running app).
- False: The rollback is not possible.

Macros

OTA_SIZE_UNKNOWN

Used for esp_ota_begin() if new image size is unknown

OTA_WITH_SEQUENTIAL_WRITES
Used for esp_ota_begin() if new image size is unknown and erase can be done in incremental manner (assuming write operation is in continuous sequence)

ESP_ERR_OTA_BASE
Base error code for ota_ops api

ESP_ERR_OTA_PARTITION_CONFLICT
Error if request was to write or erase the current running partition

ESP_ERR_OTA_SELECT_INFO_INVALID
Error if OTA data partition contains invalid content

ESP_ERR_OTA_VALIDATE_FAILED
Error if OTA app image is invalid

ESP_ERR_OTA_SMALL_SEC_VER
Error if the firmware has a secure version less than the running firmware.

ESP_ERR_OTA_ROLLBACK_FAILED
Error if flash does not have valid firmware in passive partition and hence rollback is not possible

ESP_ERR_OTA_ROLLBACK_INVALID_STATE
Error if current active firmware is still marked in pending validation state (ESP_OTA_IMG_PENDING_VERIFY), essentially first boot of firmware image post upgrade and hence firmware upgrade is not possible

Type Definitions

typedef uint32_t **esp_ota_handle_t**
Opaque handle for an application OTA update.

esp_ota_begin() returns a handle which is then used for subsequent calls to esp_ota_write() and esp_ota_end().

2.7.22 Performance Monitor

The Performance Monitor component provides APIs to use ESP32 internal performance counters to profile functions and applications.

Application Example

An example which combines performance monitor is provided in `examples/system/perfmon` directory. This example initializes the performance monitor structure and execute them with printing the statistics.

High level API Reference

Header Files

- perfmon/include/perfmon.h

API Reference

Header File

- perfmon/include/xtensa_perfmon_access.h

Functions

esp_err_t **xtensa_perfmon_init** (int *id*, uint16_t *select*, uint16_t *mask*, int *kernelcnt*, int *tracelevel*)

Init Performance Monitoor.

Initialize performance monitor register with define values

Return
- ESP_OK on success
- ESP_ERR_INVALID_ARG if one of the arguments is not correct

Parameters
- `[in] id`: performance counter number
- `[in] select`: select value from PMCTRLx register
- `[in] mask`: mask value from PMCTRLx register
- `[in] kernelcnt`: kernelcnt value from PMCTRLx register
- `[in] tracelevel`: tracelevel value from PMCTRLx register

esp_err_t **xtensa_perfmon_reset** (int *id*)

Reset PM counter.

Reset PM counter. Writes 0 to the PMx register.

Return
- ESP_OK on success
- ESP_ERR_INVALID_ARG if id out of range

Parameters
- `[in] id`: performance counter number

void **xtensa_perfmon_start** (void)

Start PM counters.

Start all PM counters synchronously. Write 1 to the PGM register

void **xtensa_perfmon_stop** (void)

Stop PM counters.

Stop all PM counters synchronously. Write 0 to the PGM register

uint32_t **xtensa_perfmon_value** (int *id*)

Read PM counter.

Read value of defined PM counter.

Return
- Performance counter value

Parameters
- `[in] id`: performance counter number

esp_err_t **xtensa_perfmon_overflow** (int *id*)

Read PM overflow state.

Read overflow value of defined PM counter.

Return
- ESP_OK if there is no overflow (overflow = 0)
- ESP_FAIL if overflow occure (overflow = 1)

Parameters
- `[in] id`: performance counter number

void **xtensa_perfmon_dump** (void)

Dump PM values.

Dump all PM register to the console.

Header File

- perfmon/include/xtensa_perfmon_apis.h

Functions

esp_err_t **xtensa_perfmon_exec**(**const** *xtensa_perfmon_config_t* **config*)

Execute PM.

Execute performance counter for dedicated function with defined parameters

Return

- ESP_OK if no errors
- ESP_ERR_INVALID_ARG if one of the required parameters not defined
- ESP_FAIL - counter overflow

Parameters

- `[in] config`: pointer to the configuration structure

void **xtensa_perfmon_view_cb**(void **params*, uint32_t *select*, uint32_t *mask*, uint32_t *value*)

Dump PM results.

Callback to dump perfmon result to a FILE* stream specified in perfmon_config_t::callback_params. If callback_params is set to NULL, will print to stdout

Parameters

- `[in] params`: used parameters passed from configuration (callback_params). This parameter expected as FILE* hanle, where data will be stored. If this parameter NULL, then data will be stored to the stdout.
- `[in] select`: select value for current counter
- `[in] mask`: mask value for current counter
- `[in] value`: counter value for current counter

Structures

struct xtensa_perfmon_config

Performance monitor configuration structure.

Structure to configure performance counter to measure dedicated function

Public Members

int **repeat_count**

how much times function will be called before the calback will be repeated

float **max_deviation**

Difference between min and max counter number 0..1, 0 - no difference, 1 - not used

void ***call_params**

This pointer will be passed to the call_function as a parameter

void (***call_function**)(void *params)

pointer to the function that have to be called

void (***callback**)(void *params, uint32_t select, uint32_t mask, uint32_t value)

pointer to the function that will be called with result parameters

void ***callback_params**

parameter that will be passed to the callback

int **tracelevel**

trace level for all counters. In case of negative value, the filter will be ignored. If it's >=0, then the perfmon will count only when interrupt level > tracelevel. It's useful to monitor interrupts.

uint32_t **counters_size**

amount of counter in the list

const uint32_t ***select_mask**

list of the select/mask parameters

Type Definitions

typedef struct *xtensa_perfmon_config* **xtensa_perfmon_config_t**

Performance monitor configuration structure.

Structure to configure performance counter to measure dedicated function

2.7.23 电源管理

概述

ESP-IDF 中集成的电源管理算法可以根据应用程序组件的需求，调整外围总线 (APB) 频率、CPU 频率，并使芯片进入 Light-sleep 模式，尽可能减少运行应用程序的功耗。

应用程序组件可以通过创建和获取电源管理锁来控制功耗。

例如：

- 对于从 APB 获得时钟频率的外设，其驱动可以要求在使用该外设时，将 APB 频率设置为 80 MHz。
- RTOS 可以要求 CPU 在有任务准备开始运行时以最高配置频率工作。
- 一些外设可能需要中断才能启用，因此其驱动也会要求禁用 Light-sleep 模式。

因为请求较高的 APB 频率或 CPU 频率，以及禁用 Light-sleep 模式会增加功耗，请将组件使用的电源管理锁降到最少。

电源管理配置

编译时可使用*CONFIG_PM_ENABLE* 选项启用电源管理功能。

启用电源管理功能将会增加中断延迟。额外延迟与多个因素有关，例如：CPU 频率、单/双核模式、是否需要进行频率切换等。CPU 频率为 240 MHz 且未启用频率调节时，最小额外延迟为 0.2 us；如果启用频率调节，且在中断入口将频率由 40 MHz 调节至 80 MHz，则最大额外延迟为 40 us。

应用程序可以通过调用`esp_pm_configure()` 函数启用动态调频 (DFS) 功能和自动 Light-sleep 模式。此函数的参数为`esp_pm_config_esp32_t`，定义了频率调节的相关设置。在此参数结构中，需要初始化下面三个字段：

- `max_freq_mhz`：最大 CPU 频率 (MHz)，即获取 `ESP_PM_CPU_FREQ_MAX` 锁后所使用的频率。该字段通常设置为*CONFIG_ESP32_DEFAULT_CPU_FREQ_MHZ*。
- `min_freq_mhz`：最小 CPU 频率 (MHz)，即仅获取 `ESP_PM_APB_FREQ_MAX` 锁后所使用的频率。该字段可设置为晶振 (XTAL) 频率值，或者 XTAL 频率值除以整数。注意，10 MHz 是生成 1 MHz 的 REF_TICK 默认时钟所需的最小频率。
- `light_sleep_enable`：没有获取任何管理锁时，决定系统是否需要自动进入 Light-sleep 状态 (`true`/`false`)。

或者，如果在 menuconfig 中启用了*CONFIG_PM_DFS_INIT_AUTO* 选项，最大 CPU 频率将由*CONFIG_ESP32_DEFAULT_CPU_FREQ_MHZ* 设置决定，最小 CPU 频率将锁定为 XTAL 频率。

注解:

1. 自动 Light-sleep 模式基于 FreeRTOS Tickless Idle 功能，因此如果在 menuconfig 中没有启用*CONFIG_FREERTOS_USE_TICKLESS_IDLE* 选项，在请求自动 Light-sleep 时，`esp_pm_configure()` 将会返回 *ESP_ERR_NOT_SUPPORTED* 错误。
2. 在 Light-sleep 状态下，外设设有时钟门控，不会产生来自 GPIO 和内部外设的中断。*Sleep Modes* 文档中所提到的唤醒源可用于从 Light-sleep 状态触发唤醒。例如，EXT0 和 EXT1 唤醒源就可以通过 GPIO 唤醒芯片。

电源管理锁

应用程序可以通过获取或释放管理锁来控制电源管理算法。应用程序获取电源管理锁后，电源管理算法的操作将受到下面的限制。释放电源管理锁后，限制解除。

电源管理锁设有获取/释放计数器，如果已多次获取电源管理锁，则需要将电源管理锁释放相同次数以解除限制。

ESP32 支持下表中所述的三种电源管理锁。

电源管理锁	描述
ESP_PM_CPU_FREQ_MAX	请求使用*esp_pm_configure()* 将 CPU 频率设置为最大值。ESP32 可以将该值设置为 80 MHz、160 MHz 或 240 MHz。
ESP_PM_APB_FREQ_MAX	请求将 APB 频率设置为最大值，ESP32 支持的最大频率为 80 MHz。
ESP_PM_NO_LIGHT_SLEEP	禁止自动切换至 Light-sleep 模式。

ESP32 电源管理算法

下表列出了启用动态调频时如何切换 CPU 频率和 APB 频率。您可以使用*esp_pm_configure()* 或者*CONFIG_ESP32_DEFAULT_CPU_FREQ_MHZ* 指定 CPU 最大频率。

CPU 最高频率	电源管理锁获取情况	APB 频率和 CPU 频率
240	获取 ESP_PM_CPU_FREQ_MAX 或 ESP_PM_APB_FREQ_MAX	CPU: 240 MHz APB: 80 MHz
	无	使用*esp_pm_configure()* 为二者设置最小值
160	获取 ESP_PM_CPU_FREQ_MAX	CPU: 160 MHz APB: 80 MHz
	获取 ESP_PM_APB_FREQ_MAX，未获得 ESP_PM_CPU_FREQ_MAX	CPU: 80 MHz APB: 80 MHz
	无	使用*esp_pm_configure()* 为二者设置最小值
80	获取 ESP_PM_CPU_FREQ_MAX 或 ESP_PM_APB_FREQ_MAX	CPU: 80 MHz APB: 80 MHz
	无	使用*esp_pm_configure()* 为二者设置最小值

如果没有获取任何管理锁，调用*esp_pm_configure()* 将启动 Light-sleep 模式。Light-sleep 模式持续时间由以下因素决定：

- 处于阻塞状态的 FreeRTOS 任务数（有限超时）
- 高分辨率定时器 API 注册的计数器数量

您也可以设置 Light-sleep 模式在最近事件（任务解除阻塞，或计时器超时）之前持续多久才唤醒芯片。

动态调频和外设驱动

启用动态调频后，APB 频率可在一个 RTOS 滴答周期内多次更改。有些外设不受 APB 频率变更的影响，但有些外设可能会出现问题。例如，Timer Group 外设定时器会继续计数，但定时器计数的速度将随 APB 频率的变更而变更。

下面的外设不受 APB 频率变更的影响：

- **UART**：如果 REF_TICK 用作时钟源，则 UART 不受 APB 频率变更影响。请查看*uart_config_t* 中的 *use_ref_tick*。
- **LEDC**：如果 REF_TICK 用作时钟源，则 LEDC 不受 APB 频率变更影响。请查看*ledc_timer_config()* 函数。
- **RMT**：如果 REF_TICK 或者 XTAL 被用作时钟源，则 RMT 不受 APB 频率变更影响。请查看*rmt_config_t* 结构体中的 *flags* 成员以及 *RMT_CHANNEL_FLAGS_AWARE_DFS* 宏。

目前以下外设驱动程序可感知动态调频，并在调频期间使用 `ESP_PM_APB_FREQ_MAX` 锁：

- SPI master
- I2C
- I2S（如果 APLL 锁在使用中，I2S 则会启用 `ESP_PM_NO_LIGHT_SLEEP` 锁）
- SDMMC

启用以下驱动程序时，将占用 `ESP_PM_APB_FREQ_MAX` 锁：

- **SPI slave**：从调用*spi_slave_initialize()* 至*spi_slave_free()* 期间。
- **Ethernet**：从调用*esp_eth_driver_install()* 至*esp_eth_driver_uninstall()* 期间。
- **WiFi**：从调用*esp_wifi_start()* 至*esp_wifi_stop()* 期间。如果启用了调制解调器睡眠模式，广播关闭时将释放此管理锁。
- **TWAI**：从调用*twai_driver_install()* 至*twai_driver_uninstall()* 期间。
- **Bluetooth**：从调用*esp_bt_controller_enable()* 至*esp_bt_controller_disable()* 期间。如果启用了蓝牙调制解调器，广播关闭时将释放此管理锁。但依然占用 `ESP_PM_NO_LIGHT_SLEEP` 锁。

以下外设驱动程序无法感知动态调频，应用程序需自己获取/释放管理锁：

- PCNT
- Sigma-delta
- Timer group
- MCPWM

API 参考

Header File

- esp_pm/include/esp_pm.h

Functions

esp_err_t **esp_pm_configure**(**const** void **config*)

Set implementation-specific power management configuration.

Return

- ESP_OK on success
- ESP_ERR_INVALID_ARG if the configuration values are not correct
- ESP_ERR_NOT_SUPPORTED if certain combination of values is not supported, or if CONFIG_PM_ENABLE is not enabled in sdkconfig

Parameters

- `config`: pointer to implementation-specific configuration structure (e.g. esp_pm_config_esp32)

esp_err_t **esp_pm_get_configuration**(void **config*)

Get implementation-specific power management configuration.

Return

- ESP_OK on success

- ESP_ERR_INVALID_ARG if the pointer is null

Parameters

- `config`: pointer to implementation-specific configuration structure (e.g. esp_pm_config_esp32)

esp_err_t **esp_pm_lock_create**(*esp_pm_lock_type_t lock_type*, int *arg*, **const** char **name*, *esp_pm_lock_handle_t* **out_handle*)

Initialize a lock handle for certain power management parameter.

When lock is created, initially it is not taken. Call esp_pm_lock_acquire to take the lock.

This function must not be called from an ISR.

Return

- ESP_OK on success
- ESP_ERR_NO_MEM if the lock structure can not be allocated
- ESP_ERR_INVALID_ARG if out_handle is NULL or type argument is not valid
- ESP_ERR_NOT_SUPPORTED if CONFIG_PM_ENABLE is not enabled in sdkconfig

Parameters

- `lock_type`: Power management constraint which the lock should control
- `arg`: argument, value depends on lock_type, see esp_pm_lock_type_t
- `name`: arbitrary string identifying the lock (e.g. "wifi" or "spi"). Used by the esp_pm_dump_locks function to list existing locks. May be set to NULL. If not set to NULL, must point to a string which is valid for the lifetime of the lock.
- `[out] out_handle`: handle returned from this function. Use this handle when calling esp_pm_lock_delete, esp_pm_lock_acquire, esp_pm_lock_release. Must not be NULL.

esp_err_t **esp_pm_lock_acquire**(*esp_pm_lock_handle_t handle*)

Take a power management lock.

Once the lock is taken, power management algorithm will not switch to the mode specified in a call to esp_pm_lock_create, or any of the lower power modes (higher numeric values of 'mode').

The lock is recursive, in the sense that if esp_pm_lock_acquire is called a number of times, esp_pm_lock_release has to be called the same number of times in order to release the lock.

This function may be called from an ISR.

This function is not thread-safe w.r.t. calls to other esp_pm_lock_* functions for the same handle.

Return

- ESP_OK on success
- ESP_ERR_INVALID_ARG if the handle is invalid
- ESP_ERR_NOT_SUPPORTED if CONFIG_PM_ENABLE is not enabled in sdkconfig

Parameters

- `handle`: handle obtained from esp_pm_lock_create function

esp_err_t **esp_pm_lock_release**(*esp_pm_lock_handle_t handle*)

Release the lock taken using esp_pm_lock_acquire.

Call to this functions removes power management restrictions placed when taking the lock.

Locks are recursive, so if esp_pm_lock_acquire is called a number of times, esp_pm_lock_release has to be called the same number of times in order to actually release the lock.

This function may be called from an ISR.

This function is not thread-safe w.r.t. calls to other esp_pm_lock_* functions for the same handle.

Return

- ESP_OK on success
- ESP_ERR_INVALID_ARG if the handle is invalid
- ESP_ERR_INVALID_STATE if lock is not acquired
- ESP_ERR_NOT_SUPPORTED if CONFIG_PM_ENABLE is not enabled in sdkconfig

Parameters

- `handle`: handle obtained from esp_pm_lock_create function

esp_err_t **esp_pm_lock_delete**(*esp_pm_lock_handle_t handle*)

Delete a lock created using esp_pm_lock.

The lock must be released before calling this function.

This function must not be called from an ISR.

Return

- ESP_OK on success
- ESP_ERR_INVALID_ARG if the handle argument is NULL
- ESP_ERR_INVALID_STATE if the lock is still acquired
- ESP_ERR_NOT_SUPPORTED if CONFIG_PM_ENABLE is not enabled in sdkconfig

Parameters

- `handle`: handle obtained from esp_pm_lock_create function

esp_err_t **esp_pm_dump_locks**(FILE **stream*)

Dump the list of all locks to stderr

This function dumps debugging information about locks created using esp_pm_lock_create to an output stream.

This function must not be called from an ISR. If esp_pm_lock_acquire/release are called while this function is running, inconsistent results may be reported.

Return

- ESP_OK on success
- ESP_ERR_NOT_SUPPORTED if CONFIG_PM_ENABLE is not enabled in sdkconfig

Parameters

- `stream`: stream to print information to; use stdout or stderr to print to the console; use fmemopen/open_memstream to print to a string buffer.

Type Definitions

typedef struct esp_pm_lock ***esp_pm_lock_handle_t**

Opaque handle to the power management lock.

Enumerations

enum esp_pm_lock_type_t

Power management constraints.

Values:

ESP_PM_CPU_FREQ_MAX

Require CPU frequency to be at the maximum value set via esp_pm_configure. Argument is unused and should be set to 0.

ESP_PM_APB_FREQ_MAX

Require APB frequency to be at the maximum value supported by the chip. Argument is unused and should be set to 0.

ESP_PM_NO_LIGHT_SLEEP

Prevent the system from going into light sleep. Argument is unused and should be set to 0.

Header File

- esp_pm/include/esp32/pm.h

Structures

struct esp_pm_config_esp32_t

Power management config for ESP32.

Pass a pointer to this structure as an argument to esp_pm_configure function.

Public Members

int **max_freq_mhz**
Maximum CPU frequency, in MHz

int **min_freq_mhz**
Minimum CPU frequency to use when no locks are taken, in MHz

bool **light_sleep_enable**
Enter light sleep when no locks are taken

2.7.24 Sleep Modes

Overview

ESP32 is capable of light sleep and deep sleep power saving modes.

In light sleep mode, digital peripherals, most of the RAM, and CPUs are clock-gated, and supply voltage is reduced. Upon exit from light sleep, peripherals and CPUs resume operation, their internal state is preserved.

In deep sleep mode, CPUs, most of the RAM, and all the digital peripherals which are clocked from APB_CLK are powered off. The only parts of the chip which can still be powered on are:

- RTC controller
- RTC peripherals
- ULP coprocessor
- RTC fast memory
- RTC slow memory

Wakeup from deep and light sleep modes can be done using several sources. These sources can be combined, in this case the chip will wake up when any one of the sources is triggered. Wakeup sources can be enabled using `esp_sleep_enable_X_wakeup` APIs and can be disabled using `esp_sleep_disable_wakeup_source()` API. Next section describes these APIs in detail. Wakeup sources can be configured at any moment before entering light or deep sleep mode.

Additionally, the application can force specific powerdown modes for the RTC peripherals and RTC memories using `esp_sleep_pd_config()` API.

Once wakeup sources are configured, application can enter sleep mode using `esp_light_sleep_start()` or `esp_deep_sleep_start()` APIs. At this point the hardware will be configured according to the requested wakeup sources, and RTC controller will either power down or power off the CPUs and digital peripherals.

If WiFi connection needs to be maintained, enable WiFi modem sleep, and enable automatic light sleep feature (see *Power Management APIs*). This will allow the system to wake up from sleep automatically when required by WiFi driver, thereby maintaining connection to the AP.

WiFi/BT and sleep modes

In deep sleep and light sleep modes, wireless peripherals are powered down. Before entering light sleep modes, applications must disable WiFi and BT using appropriate calls (`esp_bluedroid_disable()`, `esp_bt_controller_disable()`, `esp_wifi_stop()`). WiFi and BT connections will not be maintained in deep sleep or light sleep, even if these functions are not called.

Wakeup sources

Timer RTC controller has a built in timer which can be used to wake up the chip after a predefined amount of time. Time is specified at microsecond precision, but the actual resolution depends on the clock source selected for RTC SLOW_CLK.

For details on RTC clock options, see *ESP32 Technical Reference Manual* > *ULP Coprocessor* [PDF].

This wakeup mode doesn't require RTC peripherals or RTC memories to be powered on during sleep.

esp_sleep_enable_timer_wakeup() function can be used to enable deep sleep wakeup using a timer.

Touch pad RTC IO module contains logic to trigger wakeup when a touch sensor interrupt occurs. You need to configure the touch pad interrupt before the chip starts deep sleep.

Revisions 0 and 1 of the ESP32 only support this wakeup mode when RTC peripherals are not forced to be powered on (i.e. ESP_PD_DOMAIN_RTC_PERIPH should be set to ESP_PD_OPTION_AUTO).

esp_sleep_enable_touchpad_wakeup() function can be used to enable this wakeup source.

External wakeup (ext0) RTC IO module contains logic to trigger wakeup when one of RTC GPIOs is set to a predefined logic level. RTC IO is part of RTC peripherals power domain, so RTC peripherals will be kept powered on during deep sleep if this wakeup source is requested.

Because RTC IO module is enabled in this mode, internal pullup or pulldown resistors can also be used. They need to be configured by the application using *rtc_gpio_pullup_en()* and *rtc_gpio_pulldown_en()* functions, before calling `esp_sleep_start()`.

In revisions 0 and 1 of the ESP32, this wakeup source is incompatible with ULP and touch wakeup sources.

esp_sleep_enable_ext0_wakeup() function can be used to enable this wakeup source.

警告: After wake up from sleep, IO pad used for wakeup will be configured as RTC IO. Before using this pad as digital GPIO, reconfigure it using `rtc_gpio_deinit(gpio_num)` function.

External wakeup (ext1) RTC controller contains logic to trigger wakeup using multiple RTC GPIOs. One of the two logic functions can be used to trigger wakeup:

- wake up if any of the selected pins is high (`ESP_EXT1_WAKEUP_ANY_HIGH`)
- wake up if all the selected pins are low (`ESP_EXT1_WAKEUP_ALL_LOW`)

This wakeup source is implemented by the RTC controller. As such, RTC peripherals and RTC memories can be powered down in this mode. However, if RTC peripherals are powered down, internal pullup and pulldown resistors will be disabled. To use internal pullup or pulldown resistors, request RTC peripherals power domain to be kept on during sleep, and configure pullup/pulldown resistors using `rtc_gpio_` functions, before entering sleep:

```
esp_sleep_pd_config(ESP_PD_DOMAIN_RTC_PERIPH, ESP_PD_OPTION_ON);
rtc_gpio_pullup_dis(gpio_num);
rtc_gpio_pulldown_en(gpio_num);
```

警告:

- To use the EXT1 wakeup, the IO pad(s) are configured as RTC IO. Thus if these pads want to be used as digital GPIOs after waking up from sleep, `rtc_gpio_deinit(gpio_num)` function needs to be called first.
- If the RTC peripherals are configured to be powered down (which is by default), the wakeup IOs will be set to holding state before entering sleep. Therefore, after waking up from Light-sleep, please call *rtc_gpio_hold_dis* to disable the hold function to perform any pin re-configuration. For Deep-sleep wakeup, this is already being handled at the application startup stage.

esp_sleep_enable_ext1_wakeup() function can be used to enable this wakeup source.

ULP coprocessor wakeup ULP coprocessor can run while the chip is in sleep mode, and may be used to poll sensors, monitor ADC or touch sensor values, and wake up the chip when a specific event is detected. ULP coprocessor is part of RTC peripherals power domain, and it runs the program stored in RTC slow memory. RTC slow memory will be powered on during sleep if this wakeup mode is requested. RTC peripherals will be automatically powered on before ULP coprocessor starts running the program; once the program stops running, RTC peripherals are automatically powered down again.

Revisions 0 and 1 of the ESP32 only support this wakeup mode when RTC peripherals are not forced to be powered on (i.e. ESP_PD_DOMAIN_RTC_PERIPH should be set to ESP_PD_OPTION_AUTO).

esp_sleep_enable_ulp_wakeup() function can be used to enable this wakeup source.

GPIO wakeup (light sleep only) In addition to EXT0 and EXT1 wakeup sources described above, one more method of wakeup from external inputs is available in light sleep mode. With this wakeup source, each pin can be individually configured to trigger wakeup on high or low level using *gpio_wakeup_enable()* function. Unlike EXT0 and EXT1 wakeup sources, which can only be used with RTC IOs, this wakeup source can be used with any IO (RTC or digital).

esp_sleep_enable_gpio_wakeup() function can be used to enable this wakeup source.

警告: Before entering light sleep mode, check if any GPIO pin to be driven is part of the VDD_SDIO power domain. If so, this power domain must be configured to remain ON during sleep.

For example, on ESP32-WROOM-32 board, GPIO16 and GPIO17 are linked to VDD_SDIO power domain. If they are configured to remain high during light sleep, the power domain should be configured to remain powered ON. This can be done with *esp_sleep_pd_config()*:

```
esp_sleep_pd_config(ESP_PD_DOMAIN_VDDSDIO, ESP_PD_OPTION_ON);
```

UART wakeup (light sleep only) When ESP32 receives UART input from external devices, it is often required to wake up the chip when input data is available. UART peripheral contains a feature which allows waking up the chip from light sleep when a certain number of positive edges on RX pin are seen. This number of positive edges can be set using *uart_set_wakeup_threshold()* function. Note that the character which triggers wakeup (and any characters before it) will not be received by the UART after wakeup. This means that the external device typically needs to send an extra character to the ESP32 to trigger wakeup, before sending the data.

esp_sleep_enable_uart_wakeup() function can be used to enable this wakeup source.

Power-down of RTC peripherals and memories

By default, *esp_deep_sleep_start()* and *esp_light_sleep_start()* functions will power down all RTC power domains which are not needed by the enabled wakeup sources. To override this behaviour, *esp_sleep_pd_config()* function is provided.

Note: in revision 0 of the ESP32, RTC fast memory will always be kept enabled in deep sleep, so that the deep sleep stub can run after reset. This can be overridden, if the application doesn't need clean reset behaviour after deep sleep.

If some variables in the program are placed into RTC slow memory (for example, using `RTC_DATA_ATTR` attribute), RTC slow memory will be kept powered on by default. This can be overridden using *esp_sleep_pd_config()* function, if desired.

Entering light sleep

esp_light_sleep_start() function can be used to enter light sleep once wakeup sources are configured. It is also possible to go into light sleep with no wakeup sources configured, in this case the chip will be in light sleep mode indefinitely, until external reset is applied.

Entering deep sleep

esp_deep_sleep_start() function can be used to enter deep sleep once wakeup sources are configured. It is also possible to go into deep sleep with no wakeup sources configured, in this case the chip will be in deep sleep mode indefinitely, until external reset is applied.

Configuring IOs

Some ESP32 IOs have internal pullups or pulldowns, which are enabled by default. If an external circuit drives this pin in deep sleep mode, current consumption may increase due to current flowing through these pullups and pulldowns.

To isolate a pin, preventing extra current draw, call *rtc_gpio_isolate()* function.

For example, on ESP32-WROVER module, GPIO12 is pulled up externally. GPIO12 also has an internal pull-down in the ESP32 chip. This means that in deep sleep, some current will flow through these external and internal resistors, increasing deep sleep current above the minimal possible value. Add the following code before *esp_deep_sleep_start()* to remove this extra current:

```
rtc_gpio_isolate(GPIO_NUM_12);
```

UART output handling

Before entering sleep mode, *esp_deep_sleep_start()* will flush the contents of UART FIFOs.

When entering light sleep mode using *esp_light_sleep_start()*, UART FIFOs will not be flushed. Instead, UART output will be suspended, and remaining characters in the FIFO will be sent out after wakeup from light sleep.

Checking sleep wakeup cause

esp_sleep_get_wakeup_cause() function can be used to check which wakeup source has triggered wakeup from sleep mode.

For touch pad, it is possible to identify touch pad which has caused wakeup using *esp_sleep_get_touchpad_wakeup_status()* functions.

For ext1 wakeup sources, it is possible to identify pin which has caused wakeup using *esp_sleep_get_ext1_wakeup_status()* functions.

Disable sleep wakeup source

Previously configured wakeup source can be disabled later using *esp_sleep_disable_wakeup_source()* API. This function deactivates trigger for the given wakeup source. Additionally it can disable all triggers if the argument is `ESP_SLEEP_WAKEUP_ALL`.

Application Example

Implementation of basic functionality of deep sleep is shown in protocols/sntp example, where ESP module is periodically waken up to retrieve time from NTP server.

More extensive example in system/deep_sleep illustrates usage of various deep sleep wakeup triggers and ULP co-processor programming.

API Reference

Header File

- esp_system/include/esp_sleep.h

Functions

esp_err_t **esp_sleep_disable_wakeup_source**(*esp_sleep_source_t source*)

Disable wakeup source.

This function is used to deactivate wake up trigger for source defined as parameter of the function.

See docs/sleep-modes.rst for details.

Note This function does not modify wake up configuration in RTC. It will be performed in esp_sleep_start function.

Return

- ESP_OK on success
- ESP_ERR_INVALID_STATE if trigger was not active

Parameters

- `source`: - number of source to disable of type esp_sleep_source_t

esp_err_t **esp_sleep_enable_ulp_wakeup**(void)

Enable wakeup by ULP coprocessor.

Note In revisions 0 and 1 of the ESP32, ULP wakeup source cannot be used when RTC_PERIPH power domain is forced to be powered on (ESP_PD_OPTION_ON) or when ext0 wakeup source is used.

Return

- ESP_OK on success
- ESP_ERR_NOT_SUPPORTED if additional current by touch (CONFIG_ESP32_RTC_EXT_CRYST_ADDIT_CURRENT) is enabled.
- ESP_ERR_INVALID_STATE if ULP co-processor is not enabled or if wakeup triggers conflict

esp_err_t **esp_sleep_enable_timer_wakeup**(uint64_t *time_in_us*)

Enable wakeup by timer.

Return

- ESP_OK on success
- ESP_ERR_INVALID_ARG if value is out of range (TBD)

Parameters

- `time_in_us`: time before wakeup, in microseconds

esp_err_t **esp_sleep_enable_touchpad_wakeup**(void)

Enable wakeup by touch sensor.

Note In revisions 0 and 1 of the ESP32, touch wakeup source can not be used when RTC_PERIPH power domain is forced to be powered on (ESP_PD_OPTION_ON) or when ext0 wakeup source is used.

Note The FSM mode of the touch button should be configured as the timer trigger mode.

Return

- ESP_OK on success
- ESP_ERR_NOT_SUPPORTED if additional current by touch (CONFIG_ESP32_RTC_EXT_CRYST_ADDIT_CURRENT) is enabled.
- ESP_ERR_INVALID_STATE if wakeup triggers conflict

touch_pad_t **esp_sleep_get_touchpad_wakeup_status**(void)

Get the touch pad which caused wakeup.

If wakeup was caused by another source, this function will return TOUCH_PAD_MAX;

Return touch pad which caused wakeup

bool **esp_sleep_is_valid_wakeup_gpio**(*gpio_num_t gpio_num*)

Returns true if a GPIO number is valid for use as wakeup source.

Note For SoCs with RTC IO capability, this can be any valid RTC IO input pin.

Return True if this GPIO number will be accepted as a sleep wakeup source.

Parameters

- `gpio_num`: Number of the GPIO to test for wakeup source capability

esp_err_t **esp_sleep_enable_ext0_wakeup**(*gpio_num_t gpio_num*, int *level*)

Enable wakeup using a pin.

This function uses external wakeup feature of RTC_IO peripheral. It will work only if RTC peripherals are kept on during sleep.

This feature can monitor any pin which is an RTC IO. Once the pin transitions into the state given by level argument, the chip will be woken up.

Note This function does not modify pin configuration. The pin is configured in esp_sleep_start, immediately before entering sleep mode.

Note In revisions 0 and 1 of the ESP32, ext0 wakeup source can not be used together with touch or ULP wakeup sources.

Return

- ESP_OK on success
- ESP_ERR_INVALID_ARG if the selected GPIO is not an RTC GPIO, or the mode is invalid
- ESP_ERR_INVALID_STATE if wakeup triggers conflict

Parameters

- `gpio_num`: GPIO number used as wakeup source. Only GPIOs which are have RTC functionality can be used: 0,2,4,12-15,25-27,32-39.
- `level`: input level which will trigger wakeup (0=low, 1=high)

esp_err_t **esp_sleep_enable_ext1_wakeup**(uint64_t *mask*, *esp_sleep_ext1_wakeup_mode_t* *mode*)

Enable wakeup using multiple pins.

This function uses external wakeup feature of RTC controller. It will work even if RTC peripherals are shut down during sleep.

This feature can monitor any number of pins which are in RTC IOs. Once any of the selected pins goes into the state given by mode argument, the chip will be woken up.

Note This function does not modify pin configuration. The pins are configured in esp_sleep_start, immediately before entering sleep mode.

Note internal pullups and pulldowns don’ t work when RTC peripherals are shut down. In this case, external resistors need to be added. Alternatively, RTC peripherals (and pullups/pulldowns) may be kept enabled using esp_sleep_pd_config function.

Return

- ESP_OK on success
- ESP_ERR_INVALID_ARG if any of the selected GPIOs is not an RTC GPIO, or mode is invalid

Parameters

- `mask`: bit mask of GPIO numbers which will cause wakeup. Only GPIOs which are have RTC functionality can be used in this bit map: 0,2,4,12-15,25-27,32-39.
- `mode`: select logic function used to determine wakeup condition:
  - ESP_EXT1_WAKEUP_ALL_LOW: wake up when all selected GPIOs are low
  - ESP_EXT1_WAKEUP_ANY_HIGH: wake up when any of the selected GPIOs is high

esp_err_t **esp_sleep_enable_gpio_wakeup**(void)

Enable wakeup from light sleep using GPIOs.

Each GPIO supports wakeup function, which can be triggered on either low level or high level. Unlike EXT0 and EXT1 wakeup sources, this method can be used both for all IOs: RTC IOs and digital IOs. It can only be used to wakeup from light sleep though.

To enable wakeup, first call gpio_wakeup_enable, specifying gpio number and wakeup level, for each GPIO which is used for wakeup. Then call this function to enable wakeup feature.

Note In revisions 0 and 1 of the ESP32, GPIO wakeup source can not be used together with touch or ULP wakeup sources.

Return

- ESP_OK on success
- ESP_ERR_INVALID_STATE if wakeup triggers conflict

esp_err_t **esp_sleep_enable_uart_wakeup**(int *uart_num*)

Enable wakeup from light sleep using UART.

Use uart_set_wakeup_threshold function to configure UART wakeup threshold.

Wakeup from light sleep takes some time, so not every character sent to the UART can be received by the application.

Note ESP32 does not support wakeup from UART2.

Return

- ESP_OK on success
- ESP_ERR_INVALID_ARG if wakeup from given UART is not supported

Parameters

- `uart_num`: UART port to wake up from

esp_err_t **esp_sleep_enable_wifi_wakeup**(void)

Enable wakeup by WiFi MAC.

Return

- ESP_OK on success

esp_err_t **esp_sleep_disable_wifi_wakeup**(void)

Disable wakeup by WiFi MAC.

Return

- ESP_OK on success

uint64_t **esp_sleep_get_ext1_wakeup_status**(void)

Get the bit mask of GPIOs which caused wakeup (ext1)

If wakeup was caused by another source, this function will return 0.

Return bit mask, if GPIOn caused wakeup, BIT(n) will be set

esp_err_t **esp_sleep_pd_config**(*esp_sleep_pd_domain_t domain*, *esp_sleep_pd_option_t option*)

Set power down mode for an RTC power domain in sleep mode.

If not set set using this API, all power domains default to ESP_PD_OPTION_AUTO.

Return

- ESP_OK on success
- ESP_ERR_INVALID_ARG if either of the arguments is out of range

Parameters

- `domain`: power domain to configure
- `option`: power down option (ESP_PD_OPTION_OFF, ESP_PD_OPTION_ON, or ESP_PD_OPTION_AUTO)

void **esp_deep_sleep_start**(void)

Enter deep sleep with the configured wakeup options.

This function does not return.

esp_err_t **esp_light_sleep_start**(void)

Enter light sleep with the configured wakeup options.

Return

- ESP_OK on success (returned after wakeup)
- ESP_ERR_SLEEP_REJECT sleep request is rejected(wakeup source set before the sleep request)
- ESP_ERR_SLEEP_TOO_SHORT_SLEEP_DURATION after deducting the sleep flow overhead, the final sleep duration is too short to cover the minimum sleep duration of the chip, when rtc timer wakeup source enabled

void **esp_deep_sleep**(uint64_t *time_in_us*)

Enter deep-sleep mode.

The device will automatically wake up after the deep-sleep time Upon waking up, the device calls deep sleep wake stub, and then proceeds to load application.

Call to this function is equivalent to a call to esp_deep_sleep_enable_timer_wakeup followed by a call to esp_deep_sleep_start.

esp_deep_sleep does not shut down WiFi, BT, and higher level protocol connections gracefully. Make sure relevant WiFi and BT stack functions are called to close any connections and deinitialize the peripherals. These include:

- esp_bluedroid_disable
- esp_bt_controller_disable
- esp_wifi_stop

This function does not return.

Note The device will wake up immediately if the deep-sleep time is set to 0

Parameters

- `time_in_us`: deep-sleep time, unit: microsecond

esp_sleep_wakeup_cause_t **esp_sleep_get_wakeup_cause** (void)

Get the wakeup source which caused wakeup from sleep.

Return cause of wake up from last sleep (deep sleep or light sleep)

void **esp_wake_deep_sleep** (void)

Default stub to run on wake from deep sleep.

Allows for executing code immediately on wake from sleep, before the software bootloader or ESP-IDF app has started up.

This function is weak-linked, so you can implement your own version to run code immediately when the chip wakes from sleep.

See docs/deep-sleep-stub.rst for details.

void **esp_set_deep_sleep_wake_stub** (*esp_deep_sleep_wake_stub_fn_t new_stub*)

Install a new stub at runtime to run on wake from deep sleep.

If implementing esp_wake_deep_sleep() then it is not necessary to call this function.

However, it is possible to call this function to substitute a different deep sleep stub. Any function used as a deep sleep stub must be marked RTC_IRAM_ATTR, and must obey the same rules given for esp_wake_deep_sleep().

esp_deep_sleep_wake_stub_fn_t **esp_get_deep_sleep_wake_stub** (void)

Get current wake from deep sleep stub.

Return Return current wake from deep sleep stub, or NULL if no stub is installed.

void **esp_default_wake_deep_sleep** (void)

The default esp-idf-provided esp_wake_deep_sleep() stub.

See docs/deep-sleep-stub.rst for details.

void **esp_deep_sleep_disable_rom_logging** (void)

Disable logging from the ROM code after deep sleep.

Using LSB of RTC_STORE4.

void **esp_sleep_config_gpio_isolate** (void)

Configure to isolate all GPIO pins in sleep state.

void **esp_sleep_enable_gpio_switch** (bool *enable*)

Enable or disable GPIO pins status switching between slept status and waked status.

Parameters

- `enable`: decide whether to switch status or not

Type Definitions

typedef *esp_sleep_source_t* **esp_sleep_wakeup_cause_t**

typedef void (***esp_deep_sleep_wake_stub_fn_t**) (void)

Function type for stub to run on wake from sleep.

Enumerations

enum esp_sleep_ext1_wakeup_mode_t

Logic function used for EXT1 wakeup mode.

Values:

ESP_EXT1_WAKEUP_ALL_LOW = 0

Wake the chip when all selected GPIOs go low.

ESP_EXT1_WAKEUP_ANY_HIGH = 1

Wake the chip when any of the selected GPIOs go high.

enum esp_sleep_pd_domain_t

Power domains which can be powered down in sleep mode.

Values:

ESP_PD_DOMAIN_RTC_PERIPH

RTC IO, sensors and ULP co-processor.

ESP_PD_DOMAIN_RTC_SLOW_MEM

RTC slow memory.

ESP_PD_DOMAIN_RTC_FAST_MEM

RTC fast memory.

ESP_PD_DOMAIN_XTAL

XTAL oscillator.

ESP_PD_DOMAIN_RTC8M

Internal 8M oscillator.

ESP_PD_DOMAIN_VDDSDIO

VDD_SDIO.

ESP_PD_DOMAIN_MAX

Number of domains.

enum esp_sleep_pd_option_t

Power down options.

Values:

ESP_PD_OPTION_OFF

Power down the power domain in sleep mode.

ESP_PD_OPTION_ON

Keep power domain enabled during sleep mode.

ESP_PD_OPTION_AUTO

Keep power domain enabled in sleep mode, if it is needed by one of the wakeup options. Otherwise power it down.

enum esp_sleep_source_t

Sleep wakeup cause.

Values:

ESP_SLEEP_WAKEUP_UNDEFINED

In case of deep sleep, reset was not caused by exit from deep sleep.

ESP_SLEEP_WAKEUP_ALL

Not a wakeup cause, used to disable all wakeup sources with esp_sleep_disable_wakeup_source.

ESP_SLEEP_WAKEUP_EXT0

Wakeup caused by external signal using RTC_IO.

ESP_SLEEP_WAKEUP_EXT1

Wakeup caused by external signal using RTC_CNTL.

ESP_SLEEP_WAKEUP_TIMER
Wakeup caused by timer.

ESP_SLEEP_WAKEUP_TOUCHPAD
Wakeup caused by touchpad.

ESP_SLEEP_WAKEUP_ULP
Wakeup caused by ULP program.

ESP_SLEEP_WAKEUP_GPIO
Wakeup caused by GPIO (light sleep only)

ESP_SLEEP_WAKEUP_UART
Wakeup caused by UART (light sleep only)

ESP_SLEEP_WAKEUP_WIFI
Wakeup caused by WIFI (light sleep only)

ESP_SLEEP_WAKEUP_COCPU
Wakeup caused by COCPU int.

ESP_SLEEP_WAKEUP_COCPU_TRAP_TRIG
Wakeup caused by COCPU crash.

ESP_SLEEP_WAKEUP_BT
Wakeup caused by BT (light sleep only)

enum [anonymous]
Values:

ESP_ERR_SLEEP_REJECT = ESP_ERR_INVALID_STATE

ESP_ERR_SLEEP_TOO_SHORT_SLEEP_DURATION = ESP_ERR_INVALID_ARG

2.7.25 Watchdogs

Overview

The ESP-IDF has support for two types of watchdogs: The Interrupt Watchdog Timer and the Task Watchdog Timer (TWDT). The Interrupt Watchdog Timer and the TWDT can both be enabled using *Project Configuration Menu*, however the TWDT can also be enabled during runtime. The Interrupt Watchdog is responsible for detecting instances where FreeRTOS task switching is blocked for a prolonged period of time. The TWDT is responsible for detecting instances of tasks running without yielding for a prolonged period.

Interrupt watchdog The interrupt watchdog makes sure the FreeRTOS task switching interrupt isn't blocked for a long time. This is bad because no other tasks, including potentially important ones like the WiFi task and the idle task, can't get any CPU runtime. A blocked task switching interrupt can happen because a program runs into an infinite loop with interrupts disabled or hangs in an interrupt.

The default action of the interrupt watchdog is to invoke the panic handler. causing a register dump and an opportunity for the programmer to find out, using either OpenOCD or gdbstub, what bit of code is stuck with interrupts disabled. Depending on the configuration of the panic handler, it can also blindly reset the CPU, which may be preferred in a production environment.

The interrupt watchdog is built around the hardware watchdog in timer group 1. If this watchdog for some reason cannot execute the NMI handler that invokes the panic handler (e.g. because IRAM is overwritten by garbage), it will hard-reset the SOC. If the panic handler executes, it will display the panic reason as "Interrupt wdt timeout on CPU0" or "Interrupt wdt timeout on CPU1" (as applicable).

Configuration The interrupt watchdog is enabled by default via the *CONFIG_ESP_INT_WDT* configuration flag. The timeout is configured by setting *CONFIG_ESP_INT_WDT_TIMEOUT_MS*. The default timeout is higher if PSRAM support is enabled, as a critical section or interrupt routine that accesses a large amount of PSRAM will take longer to complete in some circumstances. The INT WDT timeout should always be longer than the period between FreeRTOS ticks (see *CONFIG_FREERTOS_HZ*).

Tuning If you find the Interrupt watchdog timeout is triggering because an interrupt or critical section is running longer than the timeout period, consider rewriting the code: critical sections should be made as short as possible, with non-critical computation happening outside the critical section. Interrupt handlers should also perform the minimum possible amount of computation, consider pushing data into a queue from the ISR and processing it in a task instead. Neither critical sections or interrupt handlers should ever block waiting for another event to occur.

If changing the code to reduce the processing time is not possible or desirable, it's possible to increase the *CONFIG_ESP_INT_WDT_TIMEOUT_MS* setting instead.

Task Watchdog Timer The Task Watchdog Timer (TWDT) is responsible for detecting instances of tasks running for a prolonged period of time without yielding. This is a symptom of CPU starvation and is usually caused by a higher priority task looping without yielding to a lower-priority task thus starving the lower priority task from CPU time. This can be an indicator of poorly written code that spinloops on a peripheral, or a task that is stuck in an infinite loop.

By default the TWDT will watch the Idle Tasks of each CPU, however any task can subscribe to be watched by the TWDT. Each watched task must 'reset' the TWDT periodically to indicate that they have been allocated CPU time. If a task does not reset within the TWDT timeout period, a warning will be printed with information about which tasks failed to reset the TWDT in time and which tasks are currently running.

It is also possible to redefine the function *esp_task_wdt_isr_user_handler* in the user code, in order to receive the timeout event and handle it differently.

The TWDT is built around the Hardware Watchdog Timer in Timer Group 0. The TWDT can be initialized by calling `esp_task_wdt_init()` which will configure the hardware timer. A task can then subscribe to the TWDT using `esp_task_wdt_add()` in order to be watched. Each subscribed task must periodically call `esp_task_wdt_reset()` to reset the TWDT. Failure by any subscribed tasks to periodically call `esp_task_wdt_reset()` indicates that one or more tasks have been starved of CPU time or are stuck in a loop somewhere.

A watched task can be unsubscribed from the TWDT using `esp_task_wdt_delete()`. A task that has been unsubscribed should no longer call `esp_task_wdt_reset()`. Once all tasks have unsubscribed form the TWDT, the TWDT can be deinitialized by calling `esp_task_wdt_deinit()`.

The default timeout period for the TWDT is set using config item *CONFIG_ESP_TASK_WDT_TIMEOUT_S*. This should be set to at least as long as you expect any single task will need to monopolise the CPU (for example, if you expect the app will do a long intensive calculation and should not yield to other tasks). It is also possible to change this timeout at runtime by calling `esp_task_wdt_init()`.

The following config options control TWDT configuration at startup. They are all enabled by default:

- *CONFIG_ESP_TASK_WDT* - the TWDT is initialized automatically during startup. If this option is disabled, it is still possible to initialize the Task WDT at runtime by calling `esp_task_wdt_init()`.
- *CONFIG_ESP_TASK_WDT_CHECK_IDLE_TASK_CPU0* - CPU0 Idle task is subscribed to the TWDT during startup. If this option is disabled, it is still possible to subscribe the idle task by calling `esp_task_wdt_add()` at any time.
- *CONFIG_ESP_TASK_WDT_CHECK_IDLE_TASK_CPU1* - CPU1 Idle task is subscribed to the TWDT during startup.

JTAG and watchdogs While debugging using OpenOCD, the CPUs will be halted every time a breakpoint is reached. However if the watchdog timers continue to run when a breakpoint is encountered, they will eventually trigger a reset making it very difficult to debug code. Therefore OpenOCD will disable the hardware timers of both the interrupt and task watchdogs at every breakpoint. Moreover, OpenOCD will not reenable them upon leaving

the breakpoint. This means that interrupt watchdog and task watchdog functionality will essentially be disabled. No warnings or panics from either watchdogs will be generated when the ESP32 is connected to OpenOCD via JTAG.

Interrupt Watchdog API Reference

Header File

- esp_common/include/esp_int_wdt.h

Functions

void **esp_int_wdt_init**(void)

Initialize the non-CPU-specific parts of interrupt watchdog. This is called in the init code if the interrupt watchdog is enabled in menuconfig.

Task Watchdog API Reference

A full example using the Task Watchdog is available in esp-idf: system/task_watchdog

Header File

- esp_common/include/esp_task_wdt.h

Functions

esp_err_t **esp_task_wdt_init**(uint32_t *timeout*, bool *panic*)

Initialize the Task Watchdog Timer (TWDT)

This function configures and initializes the TWDT. If the TWDT is already initialized when this function is called, this function will update the TWDT's timeout period and panic configurations instead. After initializing the TWDT, any task can elect to be watched by the TWDT by subscribing to it using esp_task_wdt_add().

Return

- ESP_OK: Initialization was successful
- ESP_ERR_NO_MEM: Initialization failed due to lack of memory

Note esp_task_wdt_init() must only be called after the scheduler started

Parameters

- `[in] timeout`: Timeout period of TWDT in seconds
- `[in] panic`: Flag that controls whether the panic handler will be executed when the TWDT times out

esp_err_t **esp_task_wdt_deinit**(void)

Deinitialize the Task Watchdog Timer (TWDT)

This function will deinitialize the TWDT. Calling this function whilst tasks are still subscribed to the TWDT, or when the TWDT is already deinitialized, will result in an error code being returned.

Return

- ESP_OK: TWDT successfully deinitialized
- ESP_ERR_INVALID_STATE: Error, tasks are still subscribed to the TWDT
- ESP_ERR_NOT_FOUND: Error, TWDT has already been deinitialized

esp_err_t **esp_task_wdt_add**(*TaskHandle_t handle*)

Subscribe a task to the Task Watchdog Timer (TWDT)

This function subscribes a task to the TWDT. Each subscribed task must periodically call esp_task_wdt_reset() to prevent the TWDT from elapsing its timeout period. Failure to do so will result in a TWDT timeout. If the task being subscribed is one of the Idle Tasks, this function will automatically enable esp_task_wdt_reset() to called from the Idle Hook of the Idle Task. Calling this function whilst the TWDT is uninitialized or attempting to subscribe an already subscribed task will result in an error code being returned.

Return

- ESP_OK: Successfully subscribed the task to the TWDT
- ESP_ERR_INVALID_ARG: Error, the task is already subscribed
- ESP_ERR_NO_MEM: Error, could not subscribe the task due to lack of memory
- ESP_ERR_INVALID_STATE: Error, the TWDT has not been initialized yet

Parameters

- `[in] handle`: Handle of the task. Input NULL to subscribe the current running task to the TWDT

esp_err_t **esp_task_wdt_reset**(void)

Reset the Task Watchdog Timer (TWDT) on behalf of the currently running task.

This function will reset the TWDT on behalf of the currently running task. Each subscribed task must periodically call this function to prevent the TWDT from timing out. If one or more subscribed tasks fail to reset the TWDT on their own behalf, a TWDT timeout will occur. If the IDLE tasks have been subscribed to the TWDT, they will automatically call this function from their idle hooks. Calling this function from a task that has not subscribed to the TWDT, or when the TWDT is uninitialized will result in an error code being returned.

Return

- ESP_OK: Successfully reset the TWDT on behalf of the currently running task
- ESP_ERR_NOT_FOUND: Error, the current running task has not subscribed to the TWDT
- ESP_ERR_INVALID_STATE: Error, the TWDT has not been initialized yet

esp_err_t **esp_task_wdt_delete**(*TaskHandle_t handle*)

Unsubscribes a task from the Task Watchdog Timer (TWDT)

This function will unsubscribe a task from the TWDT. After being unsubscribed, the task should no longer call esp_task_wdt_reset(). If the task is an IDLE task, this function will automatically disable the calling of esp_task_wdt_reset() from the Idle Hook. Calling this function whilst the TWDT is uninitialized or attempting to unsubscribe an already unsubscribed task from the TWDT will result in an error code being returned.

Return

- ESP_OK: Successfully unsubscribed the task from the TWDT
- ESP_ERR_INVALID_ARG: Error, the task is already unsubscribed
- ESP_ERR_INVALID_STATE: Error, the TWDT has not been initialized yet

Parameters

- `[in] handle`: Handle of the task. Input NULL to unsubscribe the current running task.

esp_err_t **esp_task_wdt_status**(*TaskHandle_t handle*)

Query whether a task is subscribed to the Task Watchdog Timer (TWDT)

This function will query whether a task is currently subscribed to the TWDT, or whether the TWDT is initialized.

Return :

- ESP_OK: The task is currently subscribed to the TWDT
- ESP_ERR_NOT_FOUND: The task is currently not subscribed to the TWDT
- ESP_ERR_INVALID_STATE: The TWDT is not initialized, therefore no tasks can be subscribed

Parameters

- `[in] handle`: Handle of the task. Input NULL to query the current running task.

2.7.26 System Time

Overview

System time can be kept using either one time source or two time sources simultaneously. The choice depends on the application purpose and accuracy requirements for system time.

There are the following two time sources:

- **RTC timer**: Allows keeping the system time during any resets and sleep modes, only the power-up reset leads to resetting the RTC timer. The frequency deviation depends on an *RTC Clock Source* and affects accuracy only in sleep modes, in which case the time will be measured at 6.6667 us resolution.
- **High-resolution timer**: Not available during any reset and sleep modes. The reason for using this timer is to achieve greater accuracy. It uses the APB_CLK clock source (typically 80 MHz), which has a frequency deviation of less than ±10 ppm. Time will be measured at 1 us resolution.

The settings for the system time source are as follows:

- RTC and high-resolution timer (default)
- RTC
- High-resolution timer
- None

It is recommended to stick to the default setting which provides maximum accuracy. If you want to choose a different timer, configure *CONFIG_ESP32_TIME_SYSCALL* in project configuration.

RTC Clock Source

The RTC timer has the following clock sources:

- `Internal 150kHz RC oscillator` (default): Features lowest deep sleep current consumption and no dependence on any external components. However, as frequency stability is affected by temperature fluctuations, time may drift in both Deep and Light sleep modes.
- `External 32kHz crystal`: Requires a 32kHz crystal to be connected to the 32K_XP and 32K_XN pins. Provides better frequency stability at the expense of slightly higher (by 1 uA) Deep sleep current consumption.
- `External 32kHz oscillator at 32K_XN pin`: Allows using 32kHz clock generated by an external circuit. The external clock signal must be connected to the 32K_XN pin. The amplitude should be less than 1.2 V for sine wave signal and less than 1 V for square wave signal. Common mode voltage should be in the range of 0.1 < Vcm < 0.5xVamp, where Vamp is signal amplitude. Additionally, a 1 nF capacitor must be placed between the 32K_XP pin and ground. In this case, the 32K_XP pin cannot be used as a GPIO pin.
- `Internal 8.5MHz oscillator, divided by 256 (~33kHz)`: Provides better frequency stability than the `internal 150kHz RC oscillator` at the expense of higher (by 5 uA) deep sleep current consumption. It also does not require external components.

The choice depends on your requirements for system time accuracy and power consumption in sleep modes. To modify the RTC clock source, set *CONFIG_ESP32_RTC_CLK_SRC* in project configuration.

More details on wiring requirements for the `External 32kHz crystal` and `External 32kHz oscillator at 32K_XN pin` sources can be found in Section *Crystal Oscillator* of ESP32 Hardware Design Guidelines.

Get Current Time

To get the current time, use the POSIX function `gettimeofday()`. Additionally, you can use the following standard C library functions to obtain time and manipulate it:

```
gettimeofday
time
asctime
clock
ctime
difftime
gmtime
localtime
mktime
strftime
adjtime*
```

* –To stop smooth time adjustment and update the current time immediately, use the POSIX function `settimeofday()`.

If you need to obtain time with one second resolution, use the following method:

```
time_t now;
char strftime_buf[64];
struct tm timeinfo;

time(&now);
// Set timezone to China Standard Time
setenv("TZ", "CST-8", 1);
tzset();

localtime_r(&now, &timeinfo);
strftime(strftime_buf, sizeof(strftime_buf), "%c", &timeinfo);
ESP_LOGI(TAG, "The current date/time in Shanghai is: %s", strftime_buf);
```

If you need to obtain time with one microsecond resolution, use the code snippet below:

```
struct timeval tv_now;
gettimeofday(&tv_now, NULL);
int64_t time_us = (int64_t)tv_now.tv_sec * 1000000L + (int64_t)tv_now.tv_usec;
```

SNTP Time Synchronization

To set the current time, you can use the POSIX functions `settimeofday()` and `adjtime()`. They are used internally in the lwIP SNTP library to set current time when a response from the NTP server is received. These functions can also be used separately from the lwIP SNTP library.

A function to use inside the lwIP SNTP library depends on a sync mode for system time. Use the function *`sntp_set_sync_mode()`* to set one of the following sync modes:

- `SNTP_SYNC_MODE_IMMED` (default) updates system time immediately upon receiving a response from the SNTP server after using `settimeofday()`.
- `SNTP_SYNC_MODE_SMOOTH` updates time smoothly by gradually reducing time error using the funcion `adjtime()`. If the difference between the SNTP response time and system time is more than 35 minutes, update system time immediately by using `settimeofday()`.

The lwIP SNTP library has API functions for setting a callback function for a certain event. You might need the following functions:

- `sntp_set_time_sync_notification_cb()` - use it for setting a callback function that will notify of the time synchronization process
- `sntp_get_sync_status()` and `sntp_set_sync_status()` - use it to get/set time synchronization status

To start synchronization via SNTP, just call the following three functions.

```
sntp_setoperatingmode(SNTP_OPMODE_POLL);
sntp_setservername(0, "pool.ntp.org");
sntp_init();
```

An application with this initialization code will periodically synchronize the time. The time synchronization period is determined by `CONFIG_LWIP_SNTP_UPDATE_DELAY` (default value is one hour). To modify the variable, set *`CONFIG_LWIP_SNTP_UPDATE_DELAY`* in project configuration.

A code example that demonstrates the implementation of time synchronization based on the lwIP SNTP library is provided in protocols/sntp directory.

Timezones

To set local timezone, use the following POSIX functions:

1. Call `setenv()` to set the `TZ` environment variable to the correct value depending on the device location. The format of the time string is the same as described in the GNU libc documentation (although the implementation is different).
2. Call `tzset()` to update C library runtime data for the new time zone.

Once these steps are completed, call the standard C library function `localtime()`, and it will return correct local time taking into account the time zone offset and daylight saving time.

API Reference

Header File

- lwip/include/apps/esp_sntp.h

Functions

void **sntp_sync_time**(**struct** timeval *tv)

This function updates the system time.

This is a weak-linked function. It is possible to replace all SNTP update functionality by placing a sntp_sync_time() function in the app firmware source. If the default implementation is used, calling sntp_set_sync_mode() allows the time synchronization mode to be changed to instant or smooth. If a callback function is registered via sntp_set_time_sync_notification_cb(), it will be called following time synchronization.

Parameters

- `tv`: Time received from SNTP server.

void **sntp_set_sync_mode**(*sntp_sync_mode_t sync_mode*)

Set the sync mode.

Allowable two mode: SNTP_SYNC_MODE_IMMED and SNTP_SYNC_MODE_SMOOTH.

Parameters

- `sync_mode`: Sync mode.

sntp_sync_mode_t **sntp_get_sync_mode**(void)

Get set sync mode.

Return SNTP_SYNC_MODE_IMMED: Update time immediately. SNTP_SYNC_MODE_SMOOTH: Smooth time updating.

sntp_sync_status_t **sntp_get_sync_status**(void)

Get status of time sync.

After the update is completed, the status will be returned as SNTP_SYNC_STATUS_COMPLETED. After that, the status will be reset to SNTP_SYNC_STATUS_RESET. If the update operation is not completed yet, the status will be SNTP_SYNC_STATUS_RESET. If a smooth mode was chosen and the synchronization is still continuing (adjtime works), then it will be SNTP_SYNC_STATUS_IN_PROGRESS.

Return SNTP_SYNC_STATUS_RESET: Reset status. SNTP_SYNC_STATUS_COMPLETED: Time is synchronized. SNTP_SYNC_STATUS_IN_PROGRESS: Smooth time sync in progress.

void **sntp_set_sync_status**(*sntp_sync_status_t sync_status*)

Set status of time sync.

Parameters

- `sync_status`: status of time sync (see sntp_sync_status_t)

void **sntp_set_time_sync_notification_cb**(*sntp_sync_time_cb_t callback*)

Set a callback function for time synchronization notification.

Parameters

- `callback`: a callback function

void **sntp_set_sync_interval**(uint32_t *interval_ms*)
Set the sync interval of SNTP operation.

Note: SNTPv4 RFC 4330 enforces a minimum sync interval of 15 seconds. This sync interval will be used in the next attempt update time throught SNTP. To apply the new sync interval call the sntp_restart() function, otherwise, it will be applied after the last interval expired.

Parameters
- `interval_ms`: The sync interval in ms. It cannot be lower than 15 seconds, otherwise 15 seconds will be set.

uint32_t **sntp_get_sync_interval**(void)
Get the sync interval of SNTP operation.

Return the sync interval

bool **sntp_restart**(void)
Restart SNTP.

Return True - Restart False - SNTP was not initialized yet

Type Definitions

typedef void (***sntp_sync_time_cb_t**)(**struct** timeval *tv)
SNTP callback function for notifying about time sync event.

Parameters
- `tv`: Time received from SNTP server.

Enumerations

enum sntp_sync_mode_t
SNTP time update mode.

Values:

SNTP_SYNC_MODE_IMMED
Update system time immediately when receiving a response from the SNTP server.

SNTP_SYNC_MODE_SMOOTH
Smooth time updating. Time error is gradually reduced using adjtime function. If the difference between SNTP response time and system time is large (more than 35 minutes) then update immediately.

enum sntp_sync_status_t
SNTP sync status.

Values:

SNTP_SYNC_STATUS_RESET

SNTP_SYNC_STATUS_COMPLETED

SNTP_SYNC_STATUS_IN_PROGRESS

2.7.27 Internal and Unstable APIs

This section is listing some APIs that are internal or likely to be changed or removed in the next releases of ESP-IDF.

API Reference

Header File

- esp_rom/include/esp_rom_sys.h

Functions

int **esp_rom_printf**(**const** char *_fmt_, ...)

Print formated string to console device.

Note float and long long data are not supported!

Return int: Total number of characters written on success; A negative number on failure.

Parameters

- `fmt`: Format string
- `...`: Additional arguments, depending on the format string

void **esp_rom_delay_us**(uint32_t *us*)

Pauses execution for us microseconds.

Parameters

- `us`: Number of microseconds to pause

void **esp_rom_install_channel_putc**(int *channel*, void (*_putc_)) char c

esp_rom_printf can print message to different channels simultaneously. This function can help install the low level putc function for esp_rom_printf.

Parameters

- `channel`: Channel number (startting from 1)
- `putc`: Function pointer to the putc implementation. Set NULL can disconnect esp_rom_printf with putc.

void **esp_rom_disable_logging**(void)

Disable logging from the ROM code.

void **esp_rom_install_uart_printf**(void)

Install UART1 as the default console channel, equivalent to `esp_rom_install_channel_putc(1, esp_rom_uart_putc)`

Code examples for this API section are provided in the system directory of ESP-IDF examples.

2.8 Project Configuration

2.8.1 Introduction

ESP-IDF uses kconfiglib which is a Python-based extension to the Kconfig system which provides a compile-time project configuration mechanism. Kconfig is based around options of several types: integer, string, boolean. Kconfig files specify dependencies between options, default values of the options, the way the options are grouped together, etc.

For the complete list of available features please see Kconfig and kconfiglib extentions.

2.8.2 Project Configuration Menu

Application developers can open a terminal-based project configuration menu with the `idf.py menuconfig` build target.

After being updated, this configuration is saved inside `sdkconfig` file in the project root directory. Based on `sdkconfig`, application build targets will generate `sdkconfig.h` file in the build directory, and will make sdkconfig options available to the project build system and source files.

(For the legacy GNU Make build system, the project configuration menu is opened with `make menuconfig`.)

2.8.3 Using sdkconfig.defaults

In some cases, such as when `sdkconfig` file is under revision control, the fact that `sdkconfig` file gets changed by the build system may be inconvenient. The build system offers a way to avoid this, in the form of `sdkconfig.`

defaults file. This file is never touched by the build system, and must be created manually. It can contain all the options which matter for the given application. The format is the same as that of the sdkconfig file. Once sdkconfig.defaults is created, sdkconfig can be deleted and added to the ignore list of the revision control system (e.g. .gitignore file for git). Project build targets will automatically create sdkconfig file, populated with the settings from sdkconfig.defaults file, and the rest of the settings will be set to their default values. Note that the build process will not override settings that are already in sdkconfig by ones from sdkconfig.defaults. For more information, see 自定义 *sdkconfig* 的默认值.

2.8.4 Kconfig Formatting Rules

The following attributes of Kconfig files are standardized:

- Within any menu, option names should have a consistent prefix. The prefix length is currently set to at least 3 characters.
- The indentation style is 4 characters created by spaces. All sub-items belonging to a parent item are indented by one level deeper. For example, menu is indented by 0 characters, the config inside of the menu by 4 characters, the help of the config by 8 characters and the text of the help by 12 characters.
- No trailing spaces are allowed at the end of the lines.
- The maximum length of options is set to 40 characters.
- The maximum length of lines is set to 120 characters.
- Lines cannot be wrapped by backslash (because there is a bug in earlier versions of conf-idf which causes that Windows line endings are not recognized after a backslash).

Format checker

tools/check_kconfigs.py is provided for checking the Kconfig formatting rules. The checker checks all Kconfig and Kconfig.projbuild files in the ESP-IDF directory and generates a new file with suffix .new with some recommendations how to fix issues (if there are any). Please note that the checker cannot correct all rules and the responsibility of the developer is to check and make final corrections in order to pass the tests. For example, indentations will be corrected if there isn't some misleading previous formatting but it cannot come up with a common prefix for options inside a menu.

2.8.5 Backward Compatibility of Kconfig Options

The standard Kconfig tools ignore unknown options in sdkconfig. So if a developer has custom settings for options which are renamed in newer ESP-IDF releases then the given setting for the option would be silently ignored. Therefore, several features have been adopted to avoid this:

1. confgen.py is used by the tool chain to pre-process sdkconfig files before anything else, for example menuconfig, would read them. As the consequence, the settings for old options will be kept and not ignored.
2. confgen.py recursively finds all sdkconfig.rename files in ESP-IDF directory which contain old and new Kconfig option names. Old options are replaced by new ones in the sdkconfig file.
3. confgen.py post-processes sdkconfig files and generates all build outputs (sdkconfig.h, sdkconfig.cmake, auto.conf) by adding a list of compatibility statements, i.e. value of the old option is set the value of the new option (after modification). This is done in order to not break customer codes where old option might still be used.
4. *Deprecated options and their replacements* are automatically generated by confgen.py.

2.8.6 Configuration Options Reference

Subsequent sections contain the list of available ESP-IDF options, automatically generated from Kconfig files. Note that depending on the options selected, some options listed here may not be visible by default in the interface of menuconfig.

By convention, all option names are upper case with underscores. When Kconfig generates sdkconfig and sdkconfig.h files, option names are prefixed with CONFIG_. So if an option ENABLE_FOO is defined in a Kconfig file and

selected in menuconfig, then sdkconfig and sdkconfig.h files will have `CONFIG_ENABLE_FOO` defined. In this reference, option names are also prefixed with `CONFIG_`, same as in the source code.

SDK tool configuration

Contains:

- *CONFIG_SDK_MAKE_WARN_UNDEFINED_VARIABLES*
- *CONFIG_SDK_TOOLPREFIX*
- *CONFIG_SDK_PYTHON*
- *CONFIG_SDK_TOOLCHAIN_SUPPORTS_TIME_WIDE_64_BITS*

CONFIG_SDK_TOOLPREFIX

Compiler toolchain path/prefix

Found in: SDK tool configuration

The prefix/path that is used to call the toolchain. The default setting assumes a crosstool-ng gcc setup that is in your PATH.

Default value:

- "xtensa-esp32-elf- "

CONFIG_SDK_PYTHON

Python interpreter

Found in: SDK tool configuration

The executable name/path that is used to run python.

(Note: This option is used with the legacy GNU Make build system only.)

Default value:

- "python"

CONFIG_SDK_MAKE_WARN_UNDEFINED_VARIABLES

'make' warns on undefined variables

Found in: SDK tool configuration

Adds –warn-undefined-variables to MAKEFLAGS. This causes make to print a warning any time an undefined variable is referenced.

This option helps find places where a variable reference is misspelled or otherwise missing, but it can be unwanted if you have Makefiles which depend on undefined variables expanding to an empty string.

(Note: this option is used with the legacy GNU Make build system only.)

Default value:

- Yes (enabled)

CONFIG_SDK_TOOLCHAIN_SUPPORTS_TIME_WIDE_64_BITS

Toolchain supports time_t wide 64-bits

Found in: SDK tool configuration

Enable this option in case you have a custom toolchain which supports time_t wide 64-bits. This option checks time_t is 64-bits and disables ROM time functions to use the time functions from the toolchain instead. This option allows resolving the Y2K38 problem. See "Setup Linux Toolchain from Scratch" to build a custom toolchain which supports 64-bits time_t.

Note: ESP-IDF does not currently come with any pre-compiled toolchain that supports 64-bit wide time_t. This will change in a future major release, but currently 64-bit time_t requires a custom built toolchain.

Default value:

- No (disabled)

Build type

Contains:

- *CONFIG_APP_BUILD_TYPE*

CONFIG_APP_BUILD_TYPE

Application build type

Found in: Build type

Select the way the application is built.

By default, the application is built as a binary file in a format compatible with the ESP-IDF bootloader. In addition to this application, 2nd stage bootloader is also built. Application and bootloader binaries can be written into flash and loaded/executed from there.

Another option, useful for only very small and limited applications, is to only link the .elf file of the application, such that it can be loaded directly into RAM over JTAG. Note that since IRAM and DRAM sizes are very limited, it is not possible to build any complex application this way. However for kinds of testing and debugging, this option may provide faster iterations, since the application does not need to be written into flash. Note that at the moment, ESP-IDF does not contain all the startup code required to initialize the CPUs and ROM memory (data/bss). Therefore it is necessary to execute a bit of ROM code prior to executing the application. A gdbinit file may look as follows (for ESP32):

> # Connect to a running instance of OpenOCD target remote :3333 # Reset and halt the target mon reset halt # Run to a specific point in ROM code, # where most of initialization is complete. thb *0x40007d54 c # Load the application into RAM load # Run till app_main tb app_main c

Execute this gdbinit file as follows:

> xtensa-esp32-elf-gdb build/app-name.elf -x gdbinit

Example gdbinit files for other targets can be found in tools/test_apps/system/gdb_loadable_elf/

Recommended sdkconfig.defaults for building loadable ELF files is as follows. CONFIG_APP_BUILD_TYPE_ELF_RAM is required, other options help reduce application memory footprint.

> CONFIG_APP_BUILD_TYPE_ELF_RAM=y CONFIG_VFS_SUPPORT_TERMIOS= CONFIG_NEWLIB_NANO_FORMAT=y CONFIG_ESP_SYSTEM_PANIC_PRINT_HALT=y CONFIG_ESP_DEBUG_STUBS_ENABLE= CONFIG_ESP_ERR_TO_NAME_LOOKUP=

Available options:

- Default (binary application + 2nd stage bootloader) (APP_BUILD_TYPE_APP_2NDBOOT)
- ELF file, loadable into RAM (EXPERIMENTAL)) (APP_BUILD_TYPE_ELF_RAM)

Application manager

Contains:

- *CONFIG_APP_EXCLUDE_PROJECT_NAME_VAR*
- *CONFIG_APP_EXCLUDE_PROJECT_VER_VAR*

- *CONFIG_APP_PROJECT_VER_FROM_CONFIG*
- *CONFIG_APP_RETRIEVE_LEN_ELF_SHA*
- *CONFIG_APP_COMPILE_TIME_DATE*

CONFIG_APP_COMPILE_TIME_DATE

Use time/date stamp for app

Found in: Application manager

If set, then the app will be built with the current time/date stamp. It is stored in the app description structure. If not set, time/date stamp will be excluded from app image. This can be useful for getting the same binary image files made from the same source, but at different times.

Default value:

- Yes (enabled)

CONFIG_APP_EXCLUDE_PROJECT_VER_VAR

Exclude PROJECT_VER from firmware image

Found in: Application manager

The PROJECT_VER variable from the build system will not affect the firmware image. This value will not be contained in the esp_app_desc structure.

Default value:

- No (disabled)

CONFIG_APP_EXCLUDE_PROJECT_NAME_VAR

Exclude PROJECT_NAME from firmware image

Found in: Application manager

The PROJECT_NAME variable from the build system will not affect the firmware image. This value will not be contained in the esp_app_desc structure.

Default value:

- No (disabled)

CONFIG_APP_PROJECT_VER_FROM_CONFIG

Get the project version from Kconfig

Found in: Application manager

If this is enabled, then config item APP_PROJECT_VER will be used for the variable PROJECT_VER. Other ways to set PROJECT_VER will be ignored.

Default value:

- No (disabled)

CONFIG_APP_PROJECT_VER

Project version

Found in: Application manager > CONFIG_APP_PROJECT_VER_FROM_CONFIG

Project version

Default value:

- 1 if *CONFIG_APP_PROJECT_VER_FROM_CONFIG*

CONFIG_APP_RETRIEVE_LEN_ELF_SHA

The length of APP ELF SHA is stored in RAM(chars)

Found in: Application manager

At startup, the app will read this many hex characters from the embedded APP ELF SHA-256 hash value and store it in static RAM. This ensures the app ELF SHA-256 value is always available if it needs to be printed by the panic handler code. Changing this value will change the size of a static buffer, in bytes.

Range:
- from 8 to 64

Default value:
- 16

Bootloader config

Contains:

- *CONFIG_BOOTLOADER_LOG_LEVEL*
- *CONFIG_BOOTLOADER_COMPILER_OPTIMIZATION*
- *CONFIG_BOOTLOADER_SPI_WP_PIN*
- *CONFIG_BOOTLOADER_APP_ROLLBACK_ENABLE*
- *CONFIG_BOOTLOADER_FLASH_XMC_SUPPORT*
- *CONFIG_BOOTLOADER_APP_TEST*
- *CONFIG_BOOTLOADER_FACTORY_RESET*
- *CONFIG_BOOTLOADER_HOLD_TIME_GPIO*
- *CONFIG_BOOTLOADER_CUSTOM_RESERVE_RTC*
- *CONFIG_BOOTLOADER_SKIP_VALIDATE_ALWAYS*
- *CONFIG_BOOTLOADER_SKIP_VALIDATE_ON_POWER_ON*
- *CONFIG_BOOTLOADER_SKIP_VALIDATE_IN_DEEP_SLEEP*
- *CONFIG_BOOTLOADER_SPI_CUSTOM_WP_PIN*
- *CONFIG_BOOTLOADER_WDT_ENABLE*
- *CONFIG_BOOTLOADER_VDDSDIO_BOOST*

CONFIG_BOOTLOADER_COMPILER_OPTIMIZATION

Bootloader optimization Level

Found in: Bootloader config

This option sets compiler optimization level (gcc -O argument) for the bootloader.

- The default "Size" setting will add the -0s flag to CFLAGS.
- The "Debug" setting will add the -Og flag to CFLAGS.
- The "Performance" setting will add the -O2 flag to CFLAGS.
- The "None" setting will add the -O0 flag to CFLAGS.

Note that custom optimization levels may be unsupported.

Available options:
- Size (-Os) (BOOTLOADER_COMPILER_OPTIMIZATION_SIZE)
- Debug (-Og) (BOOTLOADER_COMPILER_OPTIMIZATION_DEBUG)
- Optimize for performance (-O2) (BOOTLOADER_COMPILER_OPTIMIZATION_PERF)
- Debug without optimization (-O0) (BOOTLOADER_COMPILER_OPTIMIZATION_NONE)

CONFIG_BOOTLOADER_LOG_LEVEL

Bootloader log verbosity

Found in: Bootloader config

Specify how much output to see in bootloader logs.

Available options:

- No output (BOOTLOADER_LOG_LEVEL_NONE)
- Error (BOOTLOADER_LOG_LEVEL_ERROR)
- Warning (BOOTLOADER_LOG_LEVEL_WARN)
- Info (BOOTLOADER_LOG_LEVEL_INFO)
- Debug (BOOTLOADER_LOG_LEVEL_DEBUG)
- Verbose (BOOTLOADER_LOG_LEVEL_VERBOSE)

CONFIG_BOOTLOADER_SPI_CUSTOM_WP_PIN

Use custom SPI Flash WP Pin when flash pins set in eFuse (read help)

Found in: Bootloader config

This setting is only used if the SPI flash pins have been overridden by setting the eFuses SPI_PAD_CONFIG_xxx, and the SPI flash mode is QIO or QOUT.

When this is the case, the eFuse config only defines 3 of the 4 Quad I/O data pins. The WP pin (aka ESP32 pin "SD_DATA_3" or SPI flash pin "IO2") is not specified in eFuse. The same pin is also used for external SPIRAM if it is enabled.

If this config item is set to N (default), the correct WP pin will be automatically used for any Espressif chip or module with integrated flash. If a custom setting is needed, set this config item to Y and specify the GPIO number connected to the WP.

Default value:

- No (disabled) if ESPTOOLPY_FLASHMODE_QIO || ESPTOOLPY_FLASHMODE_QOUT

CONFIG_BOOTLOADER_SPI_WP_PIN

Custom SPI Flash WP Pin

Found in: Bootloader config

The option "Use custom SPI Flash WP Pin" must be set or this value is ignored

If burning a customized set of SPI flash pins in eFuse and using QIO or QOUT mode for flash, set this value to the GPIO number of the SPI flash WP pin.

Range:

- from 0 to 33 if ESPTOOLPY_FLASHMODE_QIO || ESPTOOLPY_FLASHMODE_QOUT

Default value:

- 7 if ESPTOOLPY_FLASHMODE_QIO || ESPTOOLPY_FLASHMODE_QOUT

CONFIG_BOOTLOADER_VDDSDIO_BOOST

VDDSDIO LDO voltage

Found in: Bootloader config

If this option is enabled, and VDDSDIO LDO is set to 1.8V (using eFuse or MTDI bootstrapping pin), bootloader will change LDO settings to output 1.9V instead. This helps prevent flash chip from browning out during flash programming operations.

This option has no effect if VDDSDIO is set to 3.3V, or if the internal VDDSDIO regulator is disabled via eFuse.

Available options:

- 1.8V (BOOTLOADER_VDDSDIO_BOOST_1_8V)
- 1.9V (BOOTLOADER_VDDSDIO_BOOST_1_9V)

CONFIG_BOOTLOADER_FACTORY_RESET

GPIO triggers factory reset

Found in: Bootloader config

Allows to reset the device to factory settings: - clear one or more data partitions; - boot from "factory" partition. The factory reset will occur if there is a GPIO input pulled low while device starts up. See settings below.

Default value:

- No (disabled)

CONFIG_BOOTLOADER_NUM_PIN_FACTORY_RESET

Number of the GPIO input for factory reset

Found in: Bootloader config > CONFIG_BOOTLOADER_FACTORY_RESET

The selected GPIO will be configured as an input with internal pull-up enabled. To trigger a factory reset, this GPIO must be pulled low on reset. Note that GPIO34-39 do not have an internal pullup and an external one must be provided.

Range:

- from 0 to 39 if *CONFIG_BOOTLOADER_FACTORY_RESET*

Default value:

- 4 if *CONFIG_BOOTLOADER_FACTORY_RESET*

CONFIG_BOOTLOADER_OTA_DATA_ERASE

Clear OTA data on factory reset (select factory partition)

Found in: Bootloader config > CONFIG_BOOTLOADER_FACTORY_RESET

The device will boot from "factory" partition (or OTA slot 0 if no factory partition is present) after a factory reset.

CONFIG_BOOTLOADER_DATA_FACTORY_RESET

Comma-separated names of partitions to clear on factory reset

Found in: Bootloader config > CONFIG_BOOTLOADER_FACTORY_RESET

Allows customers to select which data partitions will be erased while factory reset.

Specify the names of partitions as a comma-delimited with optional spaces for readability. (Like this: "nvs, phy_init, ···") Make sure that the name specified in the partition table and here are the same. Partitions of type "app" cannot be specified here.

Default value:

- "nvs" if *CONFIG_BOOTLOADER_FACTORY_RESET*

CONFIG_BOOTLOADER_APP_TEST

GPIO triggers boot from test app partition

Found in: Bootloader config

Allows to run the test app from "TEST" partition. A boot from "test" partition will occur if there is a GPIO input pulled low while device starts up. See settings below.

Default value:

- No (disabled) if *CONFIG_BOOTLOADER_APP_ANTI_ROLLBACK*

CONFIG_BOOTLOADER_NUM_PIN_APP_TEST

Number of the GPIO input to boot TEST partition

Found in: Bootloader config > CONFIG_BOOTLOADER_APP_TEST

The selected GPIO will be configured as an input with internal pull-up enabled. To trigger a test app, this GPIO must be pulled low on reset. After the GPIO input is deactivated and the device reboots, the old application will boot. (factory or OTA[x]). Note that GPIO34-39 do not have an internal pullup and an external one must be provided.

Range:
- from 0 to 39 if *CONFIG_BOOTLOADER_APP_TEST*

Default value:
- 18 if *CONFIG_BOOTLOADER_APP_TEST*

CONFIG_BOOTLOADER_HOLD_TIME_GPIO

Hold time of GPIO for reset/test mode (seconds)

Found in: Bootloader config

The GPIO must be held low continuously for this period of time after reset before a factory reset or test partition boot (as applicable) is performed.

Default value:
- 5 if *CONFIG_BOOTLOADER_FACTORY_RESET* || *CONFIG_BOOTLOADER_APP_TEST*

CONFIG_BOOTLOADER_WDT_ENABLE

Use RTC watchdog in start code

Found in: Bootloader config

Tracks the execution time of startup code. If the execution time is exceeded, the RTC_WDT will restart system. It is also useful to prevent a lock up in start code caused by an unstable power source. NOTE: Tracks the execution time starts from the bootloader code - re-set timeout, while selecting the source for slow_clk - and ends calling app_main. Re-set timeout is needed due to WDT uses a SLOW_CLK clock source. After changing a frequency slow_clk a time of WDT needs to re-set for new frequency. slow_clk depends on ESP32_RTC_CLK_SRC (INTERNAL_RC or EXTERNAL_CRYSTAL).

Default value:
- Yes (enabled)

CONFIG_BOOTLOADER_WDT_DISABLE_IN_USER_CODE

Allows RTC watchdog disable in user code

Found in: Bootloader config > CONFIG_BOOTLOADER_WDT_ENABLE

If it is set, the client must itself reset or disable rtc_wdt in their code (app_main()). Otherwise rtc_wdt will be disabled before calling app_main function. Use function rtc_wdt_feed() for resetting counter of rtc_wdt. Use function rtc_wdt_disable() for disabling rtc_wdt.

Default value:
- No (disabled)

CONFIG_BOOTLOADER_WDT_TIME_MS

Timeout for RTC watchdog (ms)

Found in: Bootloader config > CONFIG_BOOTLOADER_WDT_ENABLE

Verify that this parameter is correct and more then the execution time. Pay attention to options such as reset to factory, trigger test partition and encryption on boot - these options can increase the execution time. Note: RTC_WDT will reset while encryption operations will be performed.

Range:
- from 0 to 120000

Default value:
- 9000

CONFIG_BOOTLOADER_APP_ROLLBACK_ENABLE

Enable app rollback support

Found in: Bootloader config

After updating the app, the bootloader runs a new app with the "ESP_OTA_IMG_PENDING_VERIFY" state set. This state prevents the re-run of this app. After the first boot of the new app in the user code, the function should be called to confirm the operability of the app or vice versa about its non-operability. If the app is working, then it is marked as valid. Otherwise, it is marked as not valid and rolls back to the previous working app. A reboot is performed, and the app is booted before the software update. Note: If during the first boot a new app the power goes out or the WDT works, then roll back will happen. Rollback is possible only between the apps with the same security versions.

Default value:
- No (disabled)

CONFIG_BOOTLOADER_APP_ANTI_ROLLBACK

Enable app anti-rollback support

Found in: Bootloader config > CONFIG_BOOTLOADER_APP_ROLLBACK_ENABLE

This option prevents rollback to previous firmware/application image with lower security version.

Default value:
- No (disabled) if *CONFIG_BOOTLOADER_APP_ROLLBACK_ENABLE*

CONFIG_BOOTLOADER_APP_SECURE_VERSION

eFuse secure version of app

Found in: Bootloader config > CONFIG_BOOTLOADER_APP_ROLLBACK_ENABLE > CONFIG_BOOTLOADER_APP_ANTI_ROLLBACK

The secure version is the sequence number stored in the header of each firmware. The security version is set in the bootloader, version is recorded in the eFuse field as the number of set ones. The allocated number of bits in the efuse field for storing the security version is limited (see BOOTLOADER_APP_SEC_VER_SIZE_EFUSE_FIELD option).

Bootloader: When bootloader selects an app to boot, an app is selected that has a security version greater or equal that recorded in eFuse field. The app is booted with a higher (or equal) secure version.

The security version is worth increasing if in previous versions there is a significant vulnerability and their use is not acceptable.

Your partition table should has a scheme with ota_0 + ota_1 (without factory).

Default value:
- 0 if *CONFIG_BOOTLOADER_APP_ANTI_ROLLBACK*

CONFIG_BOOTLOADER_APP_SEC_VER_SIZE_EFUSE_FIELD

Size of the efuse secure version field

Found in: Bootloader config > CONFIG_BOOTLOADER_APP_ROLLBACK_ENABLE > CONFIG_BOOTLOADER_APP_ANTI_ROLLBACK

The size of the efuse secure version field. Its length is limited to 32 bits for ESP32 and 16 bits for ESP32-S2. This determines how many times the security version can be increased.

Range:

- from 1 to 32 if *CONFIG_BOOTLOADER_APP_ANTI_ROLLBACK*
- from 1 to 16 if *CONFIG_BOOTLOADER_APP_ANTI_ROLLBACK*

Default value:

- 32 if *CONFIG_BOOTLOADER_APP_ANTI_ROLLBACK*
- 16 if *CONFIG_BOOTLOADER_APP_ANTI_ROLLBACK*

CONFIG_BOOTLOADER_EFUSE_SECURE_VERSION_EMULATE

Emulate operations with efuse secure version(only test)

Found in: Bootloader config > CONFIG_BOOTLOADER_APP_ROLLBACK_ENABLE > CONFIG_BOOTLOADER_APP_ANTI_ROLLBACK

This option allow emulate read/write operations with efuse secure version. It allow to test anti-rollback implemention without permanent write eFuse bits. In partition table should be exist this partition *emul_efuse, data, 5, , 0x2000*.

Default value:

- No (disabled) if *CONFIG_BOOTLOADER_APP_ANTI_ROLLBACK*

CONFIG_BOOTLOADER_SKIP_VALIDATE_IN_DEEP_SLEEP

Skip image validation when exiting deep sleep

Found in: Bootloader config

This option disables the normal validation of an image coming out of deep sleep (checksums, SHA256, and signature). This is a trade-off between wakeup performance from deep sleep, and image integrity checks.

Only enable this if you know what you are doing. It should not be used in conjunction with using deep_sleep() entry and changing the active OTA partition as this would skip the validation upon first load of the new OTA partition.

It is possible to enable this option with Secure Boot if "allow insecure options" is enabled, however it's strongly recommended to NOT enable it as it may allow a Secure Boot bypass.

Default value:

- No (disabled) if (*CONFIG_SECURE_BOOT* && *CONFIG_SECURE_BOOT_INSECURE*) || *CONFIG_SECURE_BOOT*

CONFIG_BOOTLOADER_SKIP_VALIDATE_ON_POWER_ON

Skip image validation from power on reset (READ HELP FIRST)

Found in: Bootloader config

Some applications need to boot very quickly from power on. By default, the entire app binary is read from flash and verified which takes up a significant portion of the boot time.

Enabling this option will skip validation of the app when the SoC boots from power on. Note that in this case it's not possible for the bootloader to detect if an app image is corrupted in the flash, therefore it's not possible to safely fall back to a different app partition. Flash corruption of this kind is unlikely but can happen if there is a serious firmware bug or physical damage.

Following other reset types, the bootloader will still validate the app image. This increases the chances that flash corruption resulting in a crash can be detected following soft reset, and the bootloader will fall back to a valid app image. To increase the chances of successfully recovering from a flash corruption event, keep the option BOOTLOADER_WDT_ENABLE enabled and consider also enabling BOOTLOADER_WDT_DISABLE_IN_USER_CODE - then manually disable the RTC Watchdog once the app is running. In addition, enable both the Task and Interrupt watchdog timers with reset options set.

Default value:

- No (disabled)

CONFIG_BOOTLOADER_SKIP_VALIDATE_ALWAYS

Skip image validation always (READ HELP FIRST)

Found in: Bootloader config

Selecting this option prevents the bootloader from ever validating the app image before booting it. Any flash corruption of the selected app partition will make the entire SoC unbootable.

Although flash corruption is a very rare case, it is not recommended to select this option. Consider selecting "Skip image validation from power on reset" instead. However, if boot time is the only important factor then it can be enabled.

Default value:

- No (disabled)

CONFIG_BOOTLOADER_CUSTOM_RESERVE_RTC

Reserve RTC FAST memory for custom purposes

Found in: Bootloader config

This option allows the customer to place data in the RTC FAST memory, this area remains valid when rebooted, except for power loss. This memory is located at a fixed address and is available for both the bootloader and the application. (The application and bootoloader must be compiled with the same option). The RTC FAST memory has access only through PRO_CPU.

Default value:

- No (disabled)

CONFIG_BOOTLOADER_CUSTOM_RESERVE_RTC_SIZE

Size in bytes for custom purposes

Found in: Bootloader config > CONFIG_BOOTLOADER_CUSTOM_RESERVE_RTC

This option reserves in RTC FAST memory the area for custom purposes. If you want to create your own bootloader and save more information in this area of memory, you can increase it. It must be a multiple of 4 bytes. This area (rtc_retain_mem_t) is reserved and has access from the bootloader and an application.

Range:

- from 0 to 0x10 if *CONFIG_BOOTLOADER_CUSTOM_RESERVE_RTC*

Default value:

- 0 if *CONFIG_BOOTLOADER_CUSTOM_RESERVE_RTC*

CONFIG_BOOTLOADER_FLASH_XMC_SUPPORT

Enable the support for flash chips of XMC (READ HELP FIRST)

Found in: Bootloader config

Perform the startup flow recommended by XMC. Please consult XMC for the details of this flow. XMC chips will be forbidden to be used, when this option is disabled.

DON’T DISABLE THIS UNLESS YOU KNOW WHAT YOU ARE DOING.

Default value:

- Yes (enabled)

Security features

Contains:

- *CONFIG_SECURE_BOOT_INSECURE*
- *CONFIG_SECURE_SIGNED_APPS_SCHEME*
- *CONFIG_SECURE_SIGNED_ON_BOOT_NO_SECURE_BOOT*
- *CONFIG_SECURE_FLASH_ENC_ENABLED*
- *CONFIG_SECURE_BOOT*
- *CONFIG_SECURE_BOOTLOADER_KEY_ENCODING*
- *Potentially insecure options*
- *CONFIG_SECURE_SIGNED_APPS_NO_SECURE_BOOT*
- *CONFIG_SECURE_BOOT_VERIFICATION_KEY*
- *CONFIG_SECURE_BOOTLOADER_MODE*
- *CONFIG_SECURE_BOOT_BUILD_SIGNED_BINARIES*
- *CONFIG_SECURE_UART_ROM_DL_MODE*
- *CONFIG_SECURE_SIGNED_ON_UPDATE_NO_SECURE_BOOT*

CONFIG_SECURE_SIGNED_APPS_NO_SECURE_BOOT

Require signed app images

Found in: Security features

Require apps to be signed to verify their integrity.

This option uses the same app signature scheme as hardware secure boot, but unlike hardware secure boot it does not prevent the bootloader from being physically updated. This means that the device can be secured against remote network access, but not physical access. Compared to using hardware Secure Boot this option is much simpler to implement.

CONFIG_SECURE_SIGNED_APPS_SCHEME

App Signing Scheme

Found in: Security features

Select the Secure App signing scheme. Depends on the Chip Revision. There are two options: 1. ECDSA based secure boot scheme. (Only choice for Secure Boot V1) Supported in ESP32 and ESP32-ECO3. 2. The RSA based secure boot scheme. (Only choice for Secure Boot V2) Supported in ESP32-ECO3 (ESP32 Chip Revision 3 onwards), ESP32-S2, ESP32-C3, ESP32-S3.

Available options:

- ECDSA (SECURE_SIGNED_APPS_ECDSA_SCHEME)
  Embeds the ECDSA public key in the bootloader and signs the application with an ECDSA key.
  Refer to the documentation before enabling.
- RSA (SECURE_SIGNED_APPS_RSA_SCHEME)
  Appends the RSA-3072 based Signature block to the application. Refer to <Secure Boot Version 2 documentation link> before enabling.

CONFIG_SECURE_SIGNED_ON_BOOT_NO_SECURE_BOOT

Bootloader verifies app signatures

Found in: Security features

If this option is set, the bootloader will be compiled with code to verify that an app is signed before booting it.

If hardware secure boot is enabled, this option is always enabled and cannot be disabled. If hardware secure boot is not enabled, this option doesn't add significant security by itself so most users will want to leave it disabled.

Default value:

- No (disabled) if *CONFIG_SECURE_SIGNED_APPS_NO_SECURE_BOOT* && SECURE_SIGNED_APPS_ECDSA_SCHEME

CONFIG_SECURE_SIGNED_ON_UPDATE_NO_SECURE_BOOT

Verify app signature on update

Found in: Security features

If this option is set, any OTA updated apps will have the signature verified before being considered valid.

When enabled, the signature is automatically checked whenever the esp_ota_ops.h APIs are used for OTA updates, or esp_image_format.h APIs are used to verify apps.

If hardware secure boot is enabled, this option is always enabled and cannot be disabled. If hardware secure boot is not enabled, this option still adds significant security against network-based attackers by preventing spoofing of OTA updates.

Default value:

- Yes (enabled) if *CONFIG_SECURE_SIGNED_APPS_NO_SECURE_BOOT*

CONFIG_SECURE_BOOT

Enable hardware Secure Boot in bootloader (READ DOCS FIRST)

Found in: Security features

Build a bootloader which enables Secure Boot on first boot.

Once enabled, Secure Boot will not boot a modified bootloader. The bootloader will only load a partition table or boot an app if the data has a verified digital signature. There are implications for reflashing updated apps once secure boot is enabled.

When enabling secure boot, JTAG and ROM BASIC Interpreter are permanently disabled by default.

Default value:

- No (disabled)

CONFIG_SECURE_BOOT_VERSION

Select secure boot version

Found in: Security features > CONFIG_SECURE_BOOT

Select the Secure Boot Version. Depends on the Chip Revision. Secure Boot V2 is the new RSA based secure boot scheme. Supported in ESP32-ECO3 (ESP32 Chip Revision 3 onwards), ESP32-S2, ESP32-C3 ECO3. Secure Boot V1 is the AES based secure boot scheme. Supported in ESP32 and ESP32-ECO3.

Available options:

- Enable Secure Boot version 1 (SECURE_BOOT_V1_ENABLED)
  Build a bootloader which enables secure boot version 1 on first boot. Refer to the Secure Boot section of the ESP-IDF Programmer's Guide for this version before enabling.
- Enable Secure Boot version 2 (SECURE_BOOT_V2_ENABLED)
  Build a bootloader which enables Secure Boot version 2 on first boot. Refer to Secure Boot V2 section of the ESP-IDF Programmer's Guide for this version before enabling.

CONFIG_SECURE_BOOTLOADER_MODE

Secure bootloader mode

Found in: Security features

Available options:

- One-time flash (SECURE_BOOTLOADER_ONE_TIME_FLASH)
  On first boot, the bootloader will generate a key which is not readable externally or by software. A digest is generated from the bootloader image itself. This digest will be verified on each subsequent boot.
  Enabling this option means that the bootloader cannot be changed after the first time it is booted.
- Reflashable (SECURE_BOOTLOADER_REFLASHABLE)
  Generate a reusable secure bootloader key, derived (via SHA-256) from the secure boot signing key.
  This allows the secure bootloader to be re-flashed by anyone with access to the secure boot signing key.
  This option is less secure than one-time flash, because a leak of the digest key from one device allows reflashing of any device that uses it.

CONFIG_SECURE_BOOT_BUILD_SIGNED_BINARIES

Sign binaries during build

Found in: Security features

Once secure boot or signed app requirement is enabled, app images are required to be signed.

If enabled (default), these binary files are signed as part of the build process. The file named in "Secure boot private signing key" will be used to sign the image.

If disabled, unsigned app/partition data will be built. They must be signed manually using espsecure.py. Version 1 to enable ECDSA Based Secure Boot and Version 2 to enable RSA based Secure Boot. (for example, on a remote signing server.)

CONFIG_SECURE_BOOT_SIGNING_KEY

Secure boot private signing key

Found in: Security features > CONFIG_SECURE_BOOT_BUILD_SIGNED_BINARIES

Path to the key file used to sign app images.

Key file is an ECDSA private key (NIST256p curve) in PEM format for Secure Boot V1. Key file is an RSA private key in PEM format for Secure Boot V2.

Path is evaluated relative to the project directory.

You can generate a new signing key by running the following command: espsecure.py generate_signing_key secure_boot_signing_key.pem

See the Secure Boot section of the ESP-IDF Programmer's Guide for this version for details.

Default value:

- "secure_boot_signing_key.pem" if *CONFIG_SECURE_BOOT_BUILD_SIGNED_BINARIES*

CONFIG_SECURE_BOOT_VERIFICATION_KEY

Secure boot public signature verification key

Found in: Security features

Path to a public key file used to verify signed images. Secure Boot V1: This ECDSA public key is compiled into the bootloader and/or app, to verify app images. Secure Boot V2: This RSA public key is compiled into the signature block at the end of the bootloader/app.

Key file is in raw binary format, and can be extracted from a PEM formatted private key using the espsecure.py extract_public_key command.

Refer to the Secure Boot section of the ESP-IDF Programmer's Guide for this version before enabling.

CONFIG_SECURE_BOOTLOADER_KEY_ENCODING

Hardware Key Encoding

Found in: Security features

In reflashable secure bootloader mode, a hardware key is derived from the signing key (with SHA-256) and can be written to eFuse with espefuse.py.

Normally this is a 256-bit key, but if 3/4 Coding Scheme is used on the device then the eFuse key is truncated to 192 bits.

This configuration item doesn't change any firmware code, it only changes the size of key binary which is generated at build time.

Available options:

- No encoding (256 bit key) (SECURE_BOOTLOADER_KEY_ENCODING_256BIT)
- 3/4 encoding (192 bit key) (SECURE_BOOTLOADER_KEY_ENCODING_192BIT)

CONFIG_SECURE_BOOT_INSECURE

Allow potentially insecure options

Found in: Security features

You can disable some of the default protections offered by secure boot, in order to enable testing or a custom combination of security features.

Only enable these options if you are very sure.

Refer to the Secure Boot section of the ESP-IDF Programmer's Guide for this version before enabling.

Default value:

- No (disabled) if *CONFIG_SECURE_BOOT*

CONFIG_SECURE_FLASH_ENC_ENABLED

Enable flash encryption on boot (READ DOCS FIRST)

Found in: Security features

If this option is set, flash contents will be encrypted by the bootloader on first boot.

Note: After first boot, the system will be permanently encrypted. Re-flashing an encrypted system is complicated and not always possible.

Read *Flash 加密* before enabling.

Default value:

- No (disabled)

CONFIG_SECURE_FLASH_ENCRYPTION_MODE

Enable usage mode

Found in: Security features > CONFIG_SECURE_FLASH_ENC_ENABLED

By default Development mode is enabled which allows UART bootloader to perform flash encryption operations

Select Release mode only for production or manufacturing. Once enabled you can not reflash using UART bootloader

Refer to the Secure Boot section of the ESP-IDF Programmer's Guide for this version and *Flash 加密* for details.

Available options:

- Development(NOT SECURE) (SECURE_FLASH_ENCRYPTION_MODE_DEVELOPMENT)
- Release (SECURE_FLASH_ENCRYPTION_MODE_RELEASE)

Potentially insecure options Contains:

- *CONFIG_SECURE_BOOT_V2_ALLOW_EFUSE_RD_DIS*
- *CONFIG_SECURE_BOOT_ALLOW_SHORT_APP_PARTITION*
- *CONFIG_SECURE_BOOT_ALLOW_JTAG*
- *CONFIG_SECURE_BOOT_ALLOW_ROM_BASIC*
- *CONFIG_SECURE_FLASH_UART_BOOTLOADER_ALLOW_DEC*
- *CONFIG_SECURE_FLASH_UART_BOOTLOADER_ALLOW_ENC*
- *CONFIG_SECURE_FLASH_UART_BOOTLOADER_ALLOW_CACHE*
- *CONFIG_SECURE_FLASH_REQUIRE_ALREADY_ENABLED*

CONFIG_SECURE_BOOT_ALLOW_ROM_BASIC

Leave ROM BASIC Interpreter available on reset

Found in: Security features > Potentially insecure options

By default, the BASIC ROM Console starts on reset if no valid bootloader is read from the flash.

When either flash encryption or secure boot are enabled, the default is to disable this BASIC fallback mode permanently via eFuse.

If this option is set, this eFuse is not burned and the BASIC ROM Console may remain accessible. Only set this option in testing environments.

Default value:

- No (disabled) if *CONFIG_SECURE_BOOT_INSECURE* || SECURE_FLASH_ENCRYPTION_MODE_DEVELOPMENT

CONFIG_SECURE_BOOT_ALLOW_JTAG

Allow JTAG Debugging

Found in: Security features > Potentially insecure options

If not set (default), the bootloader will permanently disable JTAG (across entire chip) on first boot when either secure boot or flash encryption is enabled.

Setting this option leaves JTAG on for debugging, which negates all protections of flash encryption and some of the protections of secure boot.

Only set this option in testing environments.

Default value:

- No (disabled) if *CONFIG_SECURE_BOOT_INSECURE* || SECURE_FLASH_ENCRYPTION_MODE_DEVELOPMENT

CONFIG_SECURE_BOOT_ALLOW_SHORT_APP_PARTITION

Allow app partition length not 64KB aligned

Found in: Security features > Potentially insecure options

If not set (default), app partition size must be a multiple of 64KB. App images are padded to 64KB length, and the bootloader checks any trailing bytes after the signature (before the next 64KB boundary) have not been written. This is because flash cache maps entire 64KB pages into the address space. This

prevents an attacker from appending unverified data after the app image in the flash, causing it to be mapped into the address space.

Setting this option allows the app partition length to be unaligned, and disables padding of the app image to this length. It is generally not recommended to set this option, unless you have a legacy partitioning scheme which doesn't support 64KB aligned partition lengths.

CONFIG_SECURE_BOOT_V2_ALLOW_EFUSE_RD_DIS

Allow additional read protecting of efuses

Found in: Security features > Potentially insecure options

If not set (default, recommended), on first boot the bootloader will burn the WR_DIS_RD_DIS efuse when Secure Boot is enabled. This prevents any more efuses from being read protected.

If this option is set, it will remain possible to write the EFUSE_RD_DIS efuse field after Secure Boot is enabled. This may allow an attacker to read-protect the BLK2 efuse (for ESP32) and BLOCK4-BLOCK10 (i.e. BLOCK_KEY0-BLOCK_KEY5)(for other chips) holding the public key digest, causing an immediate denial of service and possibly allowing an additional fault injection attack to bypass the signature protection.

NOTE: Once a BLOCK is read-protected, the application will read all zeros from that block

NOTE: If "UART ROM download mode (Permanently disabled (recommended))" or "UART ROM download mode (Permanently switch to Secure mode (recommended))" is set, then it is __NOT__ possible to read/write efuses using espefuse.py utility. However, efuse can be read/written from the application

CONFIG_SECURE_FLASH_UART_BOOTLOADER_ALLOW_ENC

Leave UART bootloader encryption enabled

Found in: Security features > Potentially insecure options

If not set (default), the bootloader will permanently disable UART bootloader encryption access on first boot. If set, the UART bootloader will still be able to access hardware encryption.

It is recommended to only set this option in testing environments.

Default value:

- No (disabled) if SECURE_FLASH_ENCRYPTION_MODE_DEVELOPMENT

CONFIG_SECURE_FLASH_UART_BOOTLOADER_ALLOW_DEC

Leave UART bootloader decryption enabled

Found in: Security features > Potentially insecure options

If not set (default), the bootloader will permanently disable UART bootloader decryption access on first boot. If set, the UART bootloader will still be able to access hardware decryption.

Only set this option in testing environments. Setting this option allows complete bypass of flash encryption.

Default value:

- No (disabled) if SECURE_FLASH_ENCRYPTION_MODE_DEVELOPMENT

CONFIG_SECURE_FLASH_UART_BOOTLOADER_ALLOW_CACHE

Leave UART bootloader flash cache enabled

Found in: Security features > Potentially insecure options

If not set (default), the bootloader will permanently disable UART bootloader flash cache access on first boot. If set, the UART bootloader will still be able to access the flash cache.

Only set this option in testing environments.

Default value:

- No (disabled) if SECURE_FLASH_ENCRYPTION_MODE_DEVELOPMENT

CONFIG_SECURE_FLASH_REQUIRE_ALREADY_ENABLED

Require flash encryption to be already enabled

Found in: Security features > Potentially insecure options

If not set (default), and flash encryption is not yet enabled in eFuses, the 2nd stage bootloader will enable flash encryption: generate the flash encryption key and program eFuses. If this option is set, and flash encryption is not yet enabled, the bootloader will error out and reboot. If flash encryption is enabled in eFuses, this option does not change the bootloader behavior.

Only use this option in testing environments, to avoid accidentally enabling flash encryption on the wrong device. The device needs to have flash encryption already enabled using espefuse.py.

Default value:

- No (disabled) if SECURE_FLASH_ENCRYPTION_MODE_DEVELOPMENT

CONFIG_SECURE_UART_ROM_DL_MODE

UART ROM download mode

Found in: Security features

Available options:

- UART ROM download mode (Permanently disabled (recommended)) (SECURE_DISABLE_ROM_DL_MODE)
  If set, during startup the app will burn an eFuse bit to permanently disable the UART ROM Download Mode. This prevents any future use of esptool.py, espefuse.py and similar tools.
  Once disabled, if the SoC is booted with strapping pins set for ROM Download Mode then an error is printed instead.
  It is recommended to enable this option in any production application where Flash Encryption and/or Secure Boot is enabled and access to Download Mode is not required.
  It is also possible to permanently disable Download Mode by calling esp_efuse_disable_rom_download_mode() at runtime.
- UART ROM download mode (Permanently switch to Secure mode (recommended)) (SECURE_ENABLE_SECURE_ROM_DL_MODE)
  If set, during startup the app will burn an eFuse bit to permanently switch the UART ROM Download Mode into a separate Secure Download mode. This option can only work if Download Mode is not already disabled by eFuse.
  Secure Download mode limits the use of Download Mode functions to simple flash read, write and erase operations, plus a command to return a summary of currently enabled security features.
  Secure Download mode is not compatible with the esptool.py flasher stub feature, espefuse.py, read/writing memory or registers, encrypted download, or any other features that interact with unsupported Download Mode commands.
  Secure Download mode should be enabled in any application where Flash Encryption and/or Secure Boot is enabled. Disabling this option does not immediately cancel the benefits of the security features, but it increases the potential "attack surface" for an attacker to try and bypass them with a successful physical attack.
  It is also possible to enable secure download mode at runtime by calling esp_efuse_enable_rom_secure_download_mode()
- UART ROM download mode (Enabled (not recommended)) (SECURE_INSECURE_ALLOW_DL_MODE)

This is a potentially insecure option. Enabling this option will allow the full UART download mode to stay enabled. This option SHOULD NOT BE ENABLED for production use cases.

Serial flasher config

Contains:

- *CONFIG_ESPTOOLPY_MONITOR_BAUD*
- *CONFIG_ESPTOOLPY_AFTER*
- *CONFIG_ESPTOOLPY_BEFORE*
- *CONFIG_ESPTOOLPY_MONITOR_BAUD_OTHER_VAL*
- *CONFIG_ESPTOOLPY_BAUD*
- *CONFIG_ESPTOOLPY_PORT*
- *CONFIG_ESPTOOLPY_FLASHSIZE_DETECT*
- *CONFIG_ESPTOOLPY_NO_STUB*
- *CONFIG_ESPTOOLPY_FLASHSIZE*
- *CONFIG_ESPTOOLPY_FLASHMODE*
- *CONFIG_ESPTOOLPY_FLASHFREQ*
- *CONFIG_ESPTOOLPY_BAUD_OTHER_VAL*
- *CONFIG_ESPTOOLPY_COMPRESSED*

CONFIG_ESPTOOLPY_PORT

Default serial port

Found in: Serial flasher config

The serial port that’ s connected to the ESP chip. This can be overridden by setting the ESPPORT environment variable.

This value is ignored when using the CMake-based build system or idf.py.

Default value:

- “/dev/ttyUSB0”

CONFIG_ESPTOOLPY_BAUD

Default baud rate

Found in: Serial flasher config

Default baud rate to use while communicating with the ESP chip. Can be overridden by setting the ESPBAUD variable.

This value is ignored when using the CMake-based build system or idf.py.

Available options:

- 115200 baud (ESPTOOLPY_BAUD_115200B)
- 230400 baud (ESPTOOLPY_BAUD_230400B)
- 921600 baud (ESPTOOLPY_BAUD_921600B)
- 2Mbaud (ESPTOOLPY_BAUD_2MB)
- Other baud rate (ESPTOOLPY_BAUD_OTHER)

CONFIG_ESPTOOLPY_BAUD_OTHER_VAL

Other baud rate value

Found in: Serial flasher config

Default value:

- 115200

CONFIG_ESPTOOLPY_COMPRESSED

Use compressed upload

Found in: Serial flasher config

The flasher tool can send data compressed using zlib, letting the ROM on the ESP chip decompress it on the fly before flashing it. For most payloads, this should result in a speed increase.

Default value:

- Yes (enabled)

CONFIG_ESPTOOLPY_NO_STUB

Disable download stub

Found in: Serial flasher config

The flasher tool sends a precompiled download stub first by default. That stub allows things like compressed downloads and more. Usually you should not need to disable that feature

Default value:

- No (disabled)

CONFIG_ESPTOOLPY_FLASHMODE

Flash SPI mode

Found in: Serial flasher config

Mode the flash chip is flashed in, as well as the default mode for the binary to run in.

Available options:

- QIO (ESPTOOLPY_FLASHMODE_QIO)
- QOUT (ESPTOOLPY_FLASHMODE_QOUT)
- DIO (ESPTOOLPY_FLASHMODE_DIO)
- DOUT (ESPTOOLPY_FLASHMODE_DOUT)

CONFIG_ESPTOOLPY_FLASHFREQ

Flash SPI speed

Found in: Serial flasher config

The SPI flash frequency to be used.

Available options:

- 80 MHz (ESPTOOLPY_FLASHFREQ_80M)
- 40 MHz (ESPTOOLPY_FLASHFREQ_40M)
- 26 MHz (ESPTOOLPY_FLASHFREQ_26M)
- 20 MHz (ESPTOOLPY_FLASHFREQ_20M)

CONFIG_ESPTOOLPY_FLASHSIZE

Flash size

Found in: Serial flasher config

SPI flash size, in megabytes

Available options:

- 1 MB (ESPTOOLPY_FLASHSIZE_1MB)
- 2 MB (ESPTOOLPY_FLASHSIZE_2MB)
- 4 MB (ESPTOOLPY_FLASHSIZE_4MB)
- 8 MB (ESPTOOLPY_FLASHSIZE_8MB)

- 16 MB (ESPTOOLPY_FLASHSIZE_16MB)

CONFIG_ESPTOOLPY_FLASHSIZE_DETECT

Detect flash size when flashing bootloader

Found in: Serial flasher config

If this option is set, flashing the project will automatically detect the flash size of the target chip and update the bootloader image before it is flashed.

Default value:

- Yes (enabled)

CONFIG_ESPTOOLPY_BEFORE

Before flashing

Found in: Serial flasher config

Configure whether esptool.py should reset the ESP32 before flashing.

Automatic resetting depends on the RTS & DTR signals being wired from the serial port to the ESP32. Most USB development boards do this internally.

Available options:

- Reset to bootloader (ESPTOOLPY_BEFORE_RESET)
- No reset (ESPTOOLPY_BEFORE_NORESET)

CONFIG_ESPTOOLPY_AFTER

After flashing

Found in: Serial flasher config

Configure whether esptool.py should reset the ESP32 after flashing.

Automatic resetting depends on the RTS & DTR signals being wired from the serial port to the ESP32. Most USB development boards do this internally.

Available options:

- Reset after flashing (ESPTOOLPY_AFTER_RESET)
- Stay in bootloader (ESPTOOLPY_AFTER_NORESET)

CONFIG_ESPTOOLPY_MONITOR_BAUD

‘idf.py monitor’ baud rate

Found in: Serial flasher config

Baud rate to use when running ‘idf.py monitor’ or ‘make monitor’ to view serial output from a running chip.

If “Same as UART Console baud rate” is chosen then the value will follow the “UART Console baud rate” config item.

Can override by setting the MONITORBAUD environment variable.

Available options:

- Same as UART console baud rate (ESPTOOLPY_MONITOR_BAUD_CONSOLE)
- 9600 bps (ESPTOOLPY_MONITOR_BAUD_9600B)
- 57600 bps (ESPTOOLPY_MONITOR_BAUD_57600B)
- 115200 bps (ESPTOOLPY_MONITOR_BAUD_115200B)
- 230400 bps (ESPTOOLPY_MONITOR_BAUD_230400B)
- 921600 bps (ESPTOOLPY_MONITOR_BAUD_921600B)

- 2 Mbps (ESPTOOLPY_MONITOR_BAUD_2MB)
- Custom baud rate (ESPTOOLPY_MONITOR_BAUD_OTHER)

CONFIG_ESPTOOLPY_MONITOR_BAUD_OTHER_VAL

Custom baud rate value

Found in: Serial flasher config

Default value:

- 115200

Partition Table

Contains:

- *CONFIG_PARTITION_TABLE_CUSTOM_FILENAME*
- *CONFIG_PARTITION_TABLE_MD5*
- *CONFIG_PARTITION_TABLE_OFFSET*
- *CONFIG_PARTITION_TABLE_TYPE*

CONFIG_PARTITION_TABLE_TYPE

Partition Table

Found in: Partition Table

The partition table to flash to the ESP32. The partition table determines where apps, data and other resources are expected to be found.

The predefined partition table CSV descriptions can be found in the components/partition_table directory. Otherwise it's possible to create a new custom partition CSV for your application.

Available options:

- Single factory app, no OTA (PARTITION_TABLE_SINGLE_APP)
- Factory app, two OTA definitions (PARTITION_TABLE_TWO_OTA)
- Custom partition table CSV (PARTITION_TABLE_CUSTOM)
- Single factory app, no OTA, encrypted NVS (PARTITION_TABLE_SINGLE_APP_ENCRYPTED_NVS)
- Factory app, two OTA definitions, encrypted NVS (PARTITION_TABLE_TWO_OTA_ENCRYPTED_NVS)

CONFIG_PARTITION_TABLE_CUSTOM_FILENAME

Custom partition CSV file

Found in: Partition Table

Name of the custom partition CSV filename. This path is evaluated relative to the project root directory.

Default value:

- "partitions.csv"

CONFIG_PARTITION_TABLE_OFFSET

Offset of partition table

Found in: Partition Table

The address of partition table (by default 0x8000). Allows you to move the partition table, it gives more space for the bootloader. Note that the bootloader and app will both need to be compiled with the same PARTITION_TABLE_OFFSET value.

This number should be a multiple of 0x1000.

Note that partition offsets in the partition table CSV file may need to be changed if this value is set to a higher value. To have each partition offset adapt to the configured partition table offset, leave all partition offsets blank in the CSV file.

Default value:

- "0x8000"

CONFIG_PARTITION_TABLE_MD5

Generate an MD5 checksum for the partition table

Found in: Partition Table

Generate an MD5 checksum for the partition table for protecting the integrity of the table. The generation should be turned off for legacy bootloaders which cannot recognize the MD5 checksum in the partition table.

Default value:

- Yes (enabled) if *CONFIG_ESP32_COMPATIBLE_PRE_V3_1_BOOTLOADERS*

Compiler options

Contains:

- *CONFIG_COMPILER_OPTIMIZATION_ASSERTION_LEVEL*
- *CONFIG_COMPILER_DISABLE_GCC8_WARNINGS*
- *CONFIG_COMPILER_DUMP_RTL_FILES*
- *CONFIG_COMPILER_WARN_WRITE_STRINGS*
- *CONFIG_COMPILER_CXX_EXCEPTIONS*
- *CONFIG_COMPILER_CXX_RTTI*
- *CONFIG_COMPILER_OPTIMIZATION*
- *CONFIG_COMPILER_STACK_CHECK_MODE*

CONFIG_COMPILER_OPTIMIZATION

Optimization Level

Found in: Compiler options

This option sets compiler optimization level (gcc -O argument) for the app.

- The "Default" setting will add the -0g flag to CFLAGS.
- The "Size" setting will add the -0s flag to CFLAGS.
- The "Performance" setting will add the -O2 flag to CFLAGS.
- The "None" setting will add the -O0 flag to CFLAGS.

The "Size" setting cause the compiled code to be smaller and faster, but may lead to difficulties of correlating code addresses to source file lines when debugging.

The "Performance" setting causes the compiled code to be larger and faster, but will be easier to correlated code addresses to source file lines.

"None" with -O0 produces compiled code without optimization.

Note that custom optimization levels may be unsupported.

Compiler optimization for the IDF bootloader is set separately, see the BOOTLOADER_COMPILER_OPTIMIZATION setting.

Available options:

- Debug (-Og) (COMPILER_OPTIMIZATION_DEFAULT)
- Optimize for size (-Os) (COMPILER_OPTIMIZATION_SIZE)

- Optimize for performance (-O2) (COMPILER_OPTIMIZATION_PERF)
- Debug without optimization (-O0) (COMPILER_OPTIMIZATION_NONE)

CONFIG_COMPILER_OPTIMIZATION_ASSERTION_LEVEL

Assertion level

Found in: Compiler options

Assertions can be:

- Enabled. Failure will print verbose assertion details. This is the default.
- Set to "silent" to save code size (failed assertions will abort() but user needs to use the aborting address to find the line number with the failed assertion.)
- Disabled entirely (not recommended for most configurations.) -DNDEBUG is added to CPPFLAGS in this case.

Available options:

- Enabled (COMPILER_OPTIMIZATION_ASSERTIONS_ENABLE)
  Enable assertions. Assertion content and line number will be printed on failure.
- Silent (saves code size) (COMPILER_OPTIMIZATION_ASSERTIONS_SILENT)
  Enable silent assertions. Failed assertions will abort(), user needs to use the aborting address to find the line number with the failed assertion.
- Disabled (sets -DNDEBUG) (COMPILER_OPTIMIZATION_ASSERTIONS_DISABLE)
  If assertions are disabled, -DNDEBUG is added to CPPFLAGS.

CONFIG_COMPILER_CXX_EXCEPTIONS

Enable C++ exceptions

Found in: Compiler options

Enabling this option compiles all IDF C++ files with exception support enabled.

Disabling this option disables C++ exception support in all compiled files, and any libstdc++ code which throws an exception will abort instead.

Enabling this option currently adds an additional ~500 bytes of heap overhead when an exception is thrown in user code for the first time.

Default value:

- No (disabled)

Contains:

- *CONFIG_COMPILER_CXX_EXCEPTIONS_EMG_POOL_SIZE*

CONFIG_COMPILER_CXX_EXCEPTIONS_EMG_POOL_SIZE

Emergency Pool Size

Found in: Compiler options > CONFIG_COMPILER_CXX_EXCEPTIONS

Size (in bytes) of the emergency memory pool for C++ exceptions. This pool will be used to allocate memory for thrown exceptions when there is not enough memory on the heap.

Default value:

- 0 if *CONFIG_COMPILER_CXX_EXCEPTIONS*

CONFIG_COMPILER_CXX_RTTI

Enable C++ run-time type info (RTTI)

Found in: Compiler options

Enabling this option compiles all C++ files with RTTI support enabled. This increases binary size (typically by tens of kB) but allows using dynamic_cast conversion and typeid operator.

Default value:

- No (disabled)

CONFIG_COMPILER_STACK_CHECK_MODE

Stack smashing protection mode

Found in: Compiler options

Stack smashing protection mode. Emit extra code to check for buffer overflows, such as stack smashing attacks. This is done by adding a guard variable to functions with vulnerable objects. The guards are initialized when a function is entered and then checked when the function exits. If a guard check fails, program is halted. Protection has the following modes:

- In NORMAL mode (GCC flag: -fstack-protector) only functions that call alloca, and functions with buffers larger than 8 bytes are protected.
- STRONG mode (GCC flag: -fstack-protector-strong) is like NORMAL, but includes additional functions to be protected –those that have local array definitions, or have references to local frame addresses.
- In OVERALL mode (GCC flag: -fstack-protector-all) all functions are protected.

Modes have the following impact on code performance and coverage:

- performance: NORMAL > STRONG > OVERALL
- coverage: NORMAL < STRONG < OVERALL

Available options:

- None (COMPILER_STACK_CHECK_MODE_NONE)
- Normal (COMPILER_STACK_CHECK_MODE_NORM)
- Strong (COMPILER_STACK_CHECK_MODE_STRONG)
- Overall (COMPILER_STACK_CHECK_MODE_ALL)

CONFIG_COMPILER_WARN_WRITE_STRINGS

Enable -Wwrite-strings warning flag

Found in: Compiler options

Adds -Wwrite-strings flag for the C/C++ compilers.

For C, this gives string constants the type `const char[]` so that copying the address of one into a non-const `char *` pointer produces a warning. This warning helps to find at compile time code that tries to write into a string constant.

For C++, this warns about the deprecated conversion from string literals to `char *`.

Default value:

- No (disabled)

CONFIG_COMPILER_DISABLE_GCC8_WARNINGS

Disable new warnings introduced in GCC 6 - 8

Found in: Compiler options

Enable this option if using GCC 6 or newer, and wanting to disable warnings which don't appear with GCC 5.

Default value:

- No (disabled)

CONFIG_COMPILER_DUMP_RTL_FILES

Dump RTL files during compilation

Found in: Compiler options

If enabled, RTL files will be produced during compilation. These files can be used by other tools, for example to calculate call graphs.

Component config

Contains:

- *ADC-Calibration*
- *Application Level Tracing*
- *Bluetooth*
- *CoAP Configuration*
- *Common ESP-related*
- *Core dump*
- *Driver configurations*
- *eFuse Bit Manager*
- *CONFIG_BLE_MESH*
- *ESP HTTP client*
- *ESP HTTPS OTA*
- *ESP HTTPS server*
- *ESP NETIF Adapter*
- *ESP System Settings*
- *ESP-ASIO*
- *ESP-MQTT Configurations*
- *ESP-TLS*
- *ESP32-specific*
- *Ethernet*
- *Event Loop Library*
- *FAT Filesystem support*
- *FreeRTOS*
- *GDB Stub*
- *Heap memory debugging*
- *High resolution timer (esp_timer)*
- *HTTP Server*
- *jsmn*
- *libsodium*
- *Log output*
- *LWIP*
- *mbedTLS*
- *mDNS*
- *Modbus configuration*
- *Newlib*
- *NVS*
- *OpenSSL*
- *PHY*
- *Power Management*
- *PThreads*
- *SPI Flash driver*
- *SPIFFS Configuration*
- *Supplicant*
- *TCP Transport*
- *TinyUSB*
- *Unity unit testing library*
- *Virtual file system*

- *Wear Levelling*
- *Wi-Fi*
- *Wi-Fi Provisioning Manager*

Application Level Tracing Contains:

- *CONFIG_APPTRACE_DESTINATION*
- *FreeRTOS SystemView Tracing*
- *CONFIG_APPTRACE_GCOV_ENABLE*
- *CONFIG_APPTRACE_BUF_SIZE*
- *CONFIG_APPTRACE_PENDING_DATA_SIZE_MAX*
- *CONFIG_APPTRACE_POSTMORTEM_FLUSH_THRESH*
- *CONFIG_APPTRACE_ONPANIC_HOST_FLUSH_TMO*

CONFIG_APPTRACE_DESTINATION

Data Destination

Found in: Component config > Application Level Tracing

Select destination for application trace: JTAG or none (to disable).

Available options:

- JTAG (APPTRACE_DEST_JTAG)
- None (APPTRACE_DEST_NONE)

CONFIG_APPTRACE_ONPANIC_HOST_FLUSH_TMO

Timeout for flushing last trace data to host on panic

Found in: Component config > Application Level Tracing

Timeout for flushing last trace data to host in case of panic. In ms. Use -1 to disable timeout and wait forever.

CONFIG_APPTRACE_POSTMORTEM_FLUSH_THRESH

Threshold for flushing last trace data to host on panic

Found in: Component config > Application Level Tracing

Threshold for flushing last trace data to host on panic in post-mortem mode. This is minimal amount of data needed to perform flush. In bytes.

CONFIG_APPTRACE_BUF_SIZE

Size of the apptrace buffer

Found in: Component config > Application Level Tracing

Size of the memory buffer for trace data in bytes.

CONFIG_APPTRACE_PENDING_DATA_SIZE_MAX

Size of the pending data buffer

Found in: Component config > Application Level Tracing

Size of the buffer for events in bytes. It is useful for buffering events from the time critical code (scheduler, ISRs etc). If this parameter is 0 then events will be discarded when main HW buffer is full.

FreeRTOS SystemView Tracing Contains:

- *CONFIG_APPTRACE_SV_ENABLE*

CONFIG_APPTRACE_SV_ENABLE

SystemView Tracing Enable

Found in: Component config > Application Level Tracing > FreeRTOS SystemView Tracing

Enables supporrt for SEGGER SystemView tracing functionality.

CONFIG_APPTRACE_SV_TS_SOURCE

Timer to use as timestamp source

Found in: Component config > Application Level Tracing > FreeRTOS SystemView Tracing > CONFIG_APPTRACE_SV_ENABLE

SystemView needs to use a hardware timer as the source of timestamps when tracing. This option selects the timer for it.

Available options:

- CPU cycle counter (CCOUNT) (APPTRACE_SV_TS_SOURCE_CCOUNT)
- Timer 0, Group 0 (APPTRACE_SV_TS_SOURCE_TIMER_00)
- Timer 1, Group 0 (APPTRACE_SV_TS_SOURCE_TIMER_01)
- Timer 0, Group 1 (APPTRACE_SV_TS_SOURCE_TIMER_10)
- Timer 1, Group 1 (APPTRACE_SV_TS_SOURCE_TIMER_11)
- esp_timer high resolution timer (APPTRACE_SV_TS_SOURCE_ESP_TIMER)

CONFIG_APPTRACE_SV_MAX_TASKS

Maximum supported tasks

Found in: Component config > Application Level Tracing > FreeRTOS SystemView Tracing > CONFIG_APPTRACE_SV_ENABLE

Configures maximum supported tasks in sysview debug

CONFIG_APPTRACE_SV_BUF_WAIT_TMO

Trace buffer wait timeout

Found in: Component config > Application Level Tracing > FreeRTOS SystemView Tracing > CONFIG_APPTRACE_SV_ENABLE

Configures timeout (in us) to wait for free space in trace buffer. Set to -1 to wait forever and avoid lost events.

CONFIG_APPTRACE_SV_EVT_OVERFLOW_ENABLE

Trace Buffer Overflow Event

Found in: Component config > Application Level Tracing > FreeRTOS SystemView Tracing > CONFIG_APPTRACE_SV_ENABLE

Enables "Trace Buffer Overflow" event.

CONFIG_APPTRACE_SV_EVT_ISR_ENTER_ENABLE

ISR Enter Event

Found in: Component config > Application Level Tracing > FreeRTOS SystemView Tracing > CONFIG_APPTRACE_SV_ENABLE

Enables "ISR Enter" event.

CONFIG_APPTRACE_SV_EVT_ISR_EXIT_ENABLE

ISR Exit Event

Found in: Component config > Application Level Tracing > FreeRTOS SystemView Tracing > CONFIG_APPTRACE_SV_ENABLE

Enables "ISR Exit" event.

CONFIG_APPTRACE_SV_EVT_ISR_TO_SCHED_ENABLE

ISR Exit to Scheduler Event

Found in: Component config > Application Level Tracing > FreeRTOS SystemView Tracing > CONFIG_APPTRACE_SV_ENABLE

Enables "ISR to Scheduler" event.

CONFIG_APPTRACE_SV_EVT_TASK_START_EXEC_ENABLE

Task Start Execution Event

Found in: Component config > Application Level Tracing > FreeRTOS SystemView Tracing > CONFIG_APPTRACE_SV_ENABLE

Enables "Task Start Execution" event.

CONFIG_APPTRACE_SV_EVT_TASK_STOP_EXEC_ENABLE

Task Stop Execution Event

Found in: Component config > Application Level Tracing > FreeRTOS SystemView Tracing > CONFIG_APPTRACE_SV_ENABLE

Enables "Task Stop Execution" event.

CONFIG_APPTRACE_SV_EVT_TASK_START_READY_ENABLE

Task Start Ready State Event

Found in: Component config > Application Level Tracing > FreeRTOS SystemView Tracing > CONFIG_APPTRACE_SV_ENABLE

Enables "Task Start Ready State" event.

CONFIG_APPTRACE_SV_EVT_TASK_STOP_READY_ENABLE

Task Stop Ready State Event

Found in: Component config > Application Level Tracing > FreeRTOS SystemView Tracing > CONFIG_APPTRACE_SV_ENABLE

Enables "Task Stop Ready State" event.

CONFIG_APPTRACE_SV_EVT_TASK_CREATE_ENABLE

Task Create Event

Found in: Component config > Application Level Tracing > FreeRTOS SystemView Tracing > CONFIG_APPTRACE_SV_ENABLE

Enables "Task Create" event.

CONFIG_APPTRACE_SV_EVT_TASK_TERMINATE_ENABLE

Task Terminate Event

Found in: Component config > Application Level Tracing > FreeRTOS SystemView Tracing > CONFIG_APPTRACE_SV_ENABLE

Enables "Task Terminate" event.

CONFIG_APPTRACE_SV_EVT_IDLE_ENABLE

System Idle Event

Found in: Component config > Application Level Tracing > FreeRTOS SystemView Tracing > CONFIG_APPTRACE_SV_ENABLE

Enables "System Idle" event.

CONFIG_APPTRACE_SV_EVT_TIMER_ENTER_ENABLE

Timer Enter Event

Found in: Component config > Application Level Tracing > FreeRTOS SystemView Tracing > CONFIG_APPTRACE_SV_ENABLE

Enables "Timer Enter" event.

CONFIG_APPTRACE_SV_EVT_TIMER_EXIT_ENABLE

Timer Exit Event

Found in: Component config > Application Level Tracing > FreeRTOS SystemView Tracing > CONFIG_APPTRACE_SV_ENABLE

Enables "Timer Exit" event.

CONFIG_APPTRACE_GCOV_ENABLE

GCOV to Host Enable

Found in: Component config > Application Level Tracing

Enables support for GCOV data transfer to host.

ESP-ASIO Contains:

- *CONFIG_ASIO_SSL_SUPPORT*

CONFIG_ASIO_SSL_SUPPORT

Enable SSL/TLS support of ASIO

Found in: Component config > ESP-ASIO

Enable support for basic SSL/TLS features, available for mbedTLS/OpenSSL as well as wolfSSL TLS library.

Default value:

- No (disabled)

CONFIG_ASIO_SSL_LIBRARY_CHOICE

Choose SSL/TLS library for ESP-TLS (See help for more Info)

Found in: Component config > ESP-ASIO > CONFIG_ASIO_SSL_SUPPORT

The ASIO support multiple backend TLS libraries. Currently the mbedTLS with a thin ESP-OpenSSL port layer (default choice) and WolfSSL are supported. Different TLS libraries may support different features and have different resource usage. Consult the ESP-TLS documentation in ESP-IDF Programming guide for more details.

Available options:

- esp-openssl (ASIO_USE_ESP_OPENSSL)
- wolfSSL (License info in wolfSSL directory README) (ASIO_USE_ESP_WOLFSSL)

Bluetooth Contains:

- *Bluedroid Options*
- *CONFIG_BT_ENABLED*
- *NimBLE Options*

CONFIG_BT_ENABLED

Bluetooth

Found in: Component config > Bluetooth

Select this option to enable Bluetooth and show the submenu with Bluetooth configuration choices.

Bluetooth controller Contains:

- *CONFIG_BTDM_CTRL_AUTO_LATENCY*
- *CONFIG_BTDM_BLE_ADV_REPORT_FLOW_CTRL_SUPP*
- *CONFIG_BTDM_CTRL_FULL_SCAN_SUPPORTED*
- *CONFIG_BTDM_CTRL_BLE_MAX_CONN*
- *CONFIG_BTDM_BLE_SCAN_DUPL*
- *CONFIG_BTDM_BLE_SLEEP_CLOCK_ACCURACY*
- *CONFIG_BTDM_CTRL_MODE*
- *CONFIG_BTDM_CTRL_BR_EDR_MAX_ACL_CONN*
- *CONFIG_BTDM_CTRL_BR_EDR_SCO_DATA_PATH*
- *CONFIG_BTDM_CTRL_BR_EDR_MAX_SYNC_CONN*
- *CONFIG_BTDM_CTRL_HCI_MODE_CHOICE*
- *HCI UART(H4) Options*
- *CONFIG_BTDM_CTRL_LEGACY_AUTH_VENDOR_EVT*
- *MODEM SLEEP Options*
- *CONFIG_BTDM_CTRL_PCM_ROLE_EDGE_CONFIG*
- *CONFIG_BTDM_CTRL_PINNED_TO_CORE_CHOICE*

CONFIG_BTDM_CTRL_MODE

Bluetooth controller mode (BR/EDR/BLE/DUALMODE)

Found in: Component config > Bluetooth > CONFIG_BT_ENABLED > Bluetooth controller

Specify the bluetooth controller mode (BR/EDR, BLE or dual mode).

Available options:

- BLE Only (BTDM_CTRL_MODE_BLE_ONLY)
- BR/EDR Only (BTDM_CTRL_MODE_BR_EDR_ONLY)
- Bluetooth Dual Mode (BTDM_CTRL_MODE_BTDM)

CONFIG_BTDM_CTRL_BLE_MAX_CONN

BLE Max Connections

Found in: Component config > Bluetooth > CONFIG_BT_ENABLED > Bluetooth controller

BLE maximum connections of bluetooth controller. Each connection uses 1KB static DRAM whenever the BT controller is enabled.

Range:

- from 1 to 9 if (BTDM_CTRL_MODE_BLE_ONLY || BTDM_CTRL_MODE_BTDM) && *CONFIG_BT_ENABLED*

Default value:

- 3 if (BTDM_CTRL_MODE_BLE_ONLY || BTDM_CTRL_MODE_BTDM) && *CONFIG_BT_ENABLED*

CONFIG_BTDM_CTRL_BR_EDR_MAX_ACL_CONN

BR/EDR ACL Max Connections

Found in: Component config > Bluetooth > CONFIG_BT_ENABLED > Bluetooth controller

BR/EDR ACL maximum connections of bluetooth controller. Each connection uses 1.2KB static DRAM whenever the BT controller is enabled.

Range:

- from 1 to 7 if (BTDM_CTRL_MODE_BR_EDR_ONLY || BTDM_CTRL_MODE_BTDM) && *CONFIG_BT_ENABLED*

Default value:

- 2 if (BTDM_CTRL_MODE_BR_EDR_ONLY || BTDM_CTRL_MODE_BTDM) && *CONFIG_BT_ENABLED*

CONFIG_BTDM_CTRL_BR_EDR_MAX_SYNC_CONN

BR/EDR Sync(SCO/eSCO) Max Connections

Found in: Component config > Bluetooth > CONFIG_BT_ENABLED > Bluetooth controller

BR/EDR Synchronize maximum connections of bluetooth controller. Each connection uses 2KB static DRAM whenever the BT controller is enabled.

Range:

- from 0 to 3 if (BTDM_CTRL_MODE_BR_EDR_ONLY || BTDM_CTRL_MODE_BTDM) && *CONFIG_BT_ENABLED*

Default value:

- 0 if (BTDM_CTRL_MODE_BR_EDR_ONLY || BTDM_CTRL_MODE_BTDM) && *CONFIG_BT_ENABLED*

CONFIG_BTDM_CTRL_BR_EDR_SCO_DATA_PATH

BR/EDR Sync(SCO/eSCO) default data path

Found in: Component config > Bluetooth > CONFIG_BT_ENABLED > Bluetooth controller

SCO data path, i.e. HCI or PCM. SCO data can be sent/received through HCI synchronous packets, or the data can be routed to on-chip PCM module on ESP32. PCM input/output signals can be "matrixed" to GPIOs. The default data path can also be set using API "esp_bredr_sco_datapath_set"

Available options:

- HCI (BTDM_CTRL_BR_EDR_SCO_DATA_PATH_HCI)
- PCM (BTDM_CTRL_BR_EDR_SCO_DATA_PATH_PCM)

CONFIG_BTDM_CTRL_PCM_ROLE_EDGE_CONFIG

PCM Signal Config (Role and Polar)

Found in: Component config > Bluetooth > CONFIG_BT_ENABLED > Bluetooth controller

Default value:

- Yes (enabled) if BTDM_CTRL_BR_EDR_SCO_DATA_PATH_PCM && *CONFIG_BT_ENABLED*

Contains:

- *CONFIG_BTDM_CTRL_PCM_POLAR*
- *CONFIG_BTDM_CTRL_PCM_ROLE*

CONFIG_BTDM_CTRL_PCM_ROLE

PCM Role

Found in: Component config > Bluetooth > CONFIG_BT_ENABLED > Bluetooth controller > CONFIG_BTDM_CTRL_PCM_ROLE_EDGE_CONFIG

PCM role can be configured as PCM master or PCM slave

Available options:

- PCM Master (BTDM_CTRL_PCM_ROLE_MASTER)
- PCM Slave (BTDM_CTRL_PCM_ROLE_SLAVE)

CONFIG_BTDM_CTRL_PCM_POLAR

PCM Polar

Found in: Component config > Bluetooth > CONFIG_BT_ENABLED > Bluetooth controller > CONFIG_BTDM_CTRL_PCM_ROLE_EDGE_CONFIG

PCM polarity can be configured as Falling Edge or Rising Edge

Available options:

- Falling Edge (BTDM_CTRL_PCM_POLAR_FALLING_EDGE)
- Rising Edge (BTDM_CTRL_PCM_POLAR_RISING_EDGE)

CONFIG_BTDM_CTRL_AUTO_LATENCY

Auto latency

Found in: Component config > Bluetooth > CONFIG_BT_ENABLED > Bluetooth controller

BLE auto latency, used to enhance classic BT performance while classic BT and BLE are enabled at the same time.

Default value:

- No (disabled) if BTDM_CTRL_MODE_BTDM && *CONFIG_BT_ENABLED*

CONFIG_BTDM_CTRL_LEGACY_AUTH_VENDOR_EVT

Legacy Authentication Vendor Specific Event Enable

Found in: Component config > Bluetooth > CONFIG_BT_ENABLED > Bluetooth controller

To protect from BIAS attack during Legacy authentication, Legacy authentication Vendor specific event should be enabled

Default value:

- Yes (enabled) if (BTDM_CTRL_MODE_BR_EDR_ONLY || BTDM_CTRL_MODE_BTDM) && *CONFIG_BT_ENABLED*

CONFIG_BTDM_CTRL_PINNED_TO_CORE_CHOICE

The cpu core which bluetooth controller run

Found in: Component config > Bluetooth > CONFIG_BT_ENABLED > Bluetooth controller

Specify the cpu core to run bluetooth controller. Can not specify no-affinity.

Available options:

- Core 0 (PRO CPU) (BTDM_CTRL_PINNED_TO_CORE_0)
- Core 1 (APP CPU) (BTDM_CTRL_PINNED_TO_CORE_1)

CONFIG_BTDM_CTRL_HCI_MODE_CHOICE

HCI mode

Found in: Component config > Bluetooth > CONFIG_BT_ENABLED > Bluetooth controller

Speicify HCI mode as VHCI or UART(H4)

Available options:

- VHCI (BTDM_CTRL_HCI_MODE_VHCI)
  Normal option. Mostly, choose this VHCI when bluetooth host run on ESP32, too.
- UART(H4) (BTDM_CTRL_HCI_MODE_UART_H4)
  If use external bluetooth host which run on other hardware and use UART as the HCI interface, choose this option.

HCI UART(H4) Options Contains:

- *CONFIG_BTDM_CTRL_HCI_UART_BAUDRATE*
- *CONFIG_BTDM_CTRL_HCI_UART_NO*

CONFIG_BTDM_CTRL_HCI_UART_NO

UART Number for HCI

Found in: Component config > Bluetooth > CONFIG_BT_ENABLED > Bluetooth controller > HCI UART(H4) Options

Uart number for HCI. The available uart is UART1 and UART2.

Range:

- from 1 to 2 if BTDM_CTRL_HCI_MODE_UART_H4 && *CONFIG_BT_ENABLED*

Default value:

- 1 if BTDM_CTRL_HCI_MODE_UART_H4 && *CONFIG_BT_ENABLED*

CONFIG_BTDM_CTRL_HCI_UART_BAUDRATE

UART Baudrate for HCI

Found in: Component config > Bluetooth > CONFIG_BT_ENABLED > Bluetooth controller > HCI UART(H4) Options

UART Baudrate for HCI. Please use standard baudrate.

Range:

- from 115200 to 921600 if BTDM_CTRL_HCI_MODE_UART_H4 && *CONFIG_BT_ENABLED*

Default value:

- 921600 if BTDM_CTRL_HCI_MODE_UART_H4 && *CONFIG_BT_ENABLED*

MODEM SLEEP Options

Contains:

- *CONFIG_BTDM_CTRL_LOW_POWER_CLOCK*
- *CONFIG_BTDM_CTRL_MODEM_SLEEP*

CONFIG_BTDM_CTRL_MODEM_SLEEP

Bluetooth modem sleep

Found in: Component config > Bluetooth > CONFIG_BT_ENABLED > Bluetooth controller > MODEM SLEEP Options

Enable/disable bluetooth controller low power mode.

Default value:

- Yes (enabled) if *CONFIG_BT_ENABLED*

CONFIG_BTDM_CTRL_MODEM_SLEEP_MODE

Bluetooth Modem sleep mode

Found in: Component config > Bluetooth > CONFIG_BT_ENABLED > Bluetooth controller > MODEM SLEEP Options > CONFIG_BTDM_CTRL_MODEM_SLEEP

To select which strategy to use for modem sleep

Available options:

- ORIG Mode(sleep with low power clock) (BTDM_CTRL_MODEM_SLEEP_MODE_ORIG)
  ORIG mode is a bluetooth sleep mode that can be used for dual mode controller. In this mode, bluetooth controller sleeps between BR/EDR frames and BLE events. A low power clock is used to maintain bluetooth reference clock.
- EVED Mode(For internal test only) (BTDM_CTRL_MODEM_SLEEP_MODE_EVED)
  EVED mode is for BLE only and is only for internal test. Do not use it for production. this mode is not compatible with DFS nor light sleep

CONFIG_BTDM_CTRL_LOW_POWER_CLOCK

Bluetooth low power clock

Found in: Component config > Bluetooth > CONFIG_BT_ENABLED > Bluetooth controller > MODEM SLEEP Options

Select the low power clock source for bluetooth controller. Bluetooth low power clock is the clock source to maintain time in sleep mode.

- "Main crystal" option provides good accuracy and can support Dynamic Frequency Scaling to be used with Bluetooth modem sleep. Light sleep is not supported.

- “External 32kHz crystal” option allows user to use a 32.768kHz crystal as Bluetooth low power clock. This option is allowed as long as External 32kHz crystal is configured as the system RTC clock source. This option provides good accuracy and supports Bluetooth modem sleep to be used alongside Dynamic Frequency Scaling or light sleep.

Available options:

- Main crystal (BTDM_CTRL_LPCLK_SEL_MAIN_XTAL)
  Main crystal can be used as low power clock for bluetooth modem sleep. If this option is selected, bluetooth modem sleep can work under Dynamic Frequency Scaling(DFS) enabled, but cannot work when light sleep is enabled. Main crystal has a good performance in accuracy as the bluetooth low power clock source.
- External 32kHz crystal (BTDM_CTRL_LPCLK_SEL_EXT_32K_XTAL)
  External 32kHz crystal has a nominal frequency of 32.768kHz and provides good frequency stability. If used as Bluetooth low power clock, External 32kHz can support Bluetooth modem sleep to be used with both DFS and light sleep.

CONFIG_BTDM_BLE_SLEEP_CLOCK_ACCURACY

BLE Sleep Clock Accuracy

Found in: Component config > Bluetooth > CONFIG_BT_ENABLED > Bluetooth controller

BLE Sleep Clock Accuracy(SCA) for the local device is used to estimate window widening in BLE connection events. With a lower level of clock accuracy(e.g. 500ppm over 250ppm), the slave needs a larger RX window to synchronize with master in each anchor point, thus resulting in an increase of power consumption but a higher level of robustness in keeping connected. According to the requirements of Bluetooth Core specification 4.2, the worst-case accuracy of Classic Bluetooth low power oscialltor(LPO) is +/-250ppm in STANDBY and in low power modes such as sniff. For BLE the worst-case SCA is +/-500ppm.

- “151ppm to 250ppm” option is the default value for Bluetooth Dual mode
- **“251ppm to 500ppm” option can be used in BLE only mode when using external 32kHz crystal as** low power clock. This option is provided in case that BLE sleep clock has a lower level of accuracy, or other error sources contribute to the inaccurate timing during sleep.

Available options:

- 251ppm to 500ppm (BTDM_BLE_DEFAULT_SCA_500PPM)
- 151ppm to 250ppm (BTDM_BLE_DEFAULT_SCA_250PPM)

CONFIG_BTDM_BLE_SCAN_DUPL

BLE Scan Duplicate Options

Found in: Component config > Bluetooth > CONFIG_BT_ENABLED > Bluetooth controller

This select enables parameters setting of BLE scan duplicate.

Default value:

- Yes (enabled) if (BTDM_CTRL_MODE_BTDM || BTDM_CTRL_MODE_BLE_ONLY) && *CONFIG_BT_ENABLED*

CONFIG_BTDM_SCAN_DUPL_TYPE

Scan Duplicate Type

Found in: Component config > Bluetooth > CONFIG_BT_ENABLED > Bluetooth controller > CONFIG_BTDM_BLE_SCAN_DUPL

Scan duplicate have three ways. one is “Scan Duplicate By Device Address”, This way is to use advertiser address filtering. The adv packet of the same address is only allowed to be reported once. Another way is “Scan Duplicate By Device Address And Advertising Data” . This way is to use advertising data and device address filtering. All different adv packets with the same address are allowed to be reported. The

last way is “Scan Duplicate By Advertising Data” . This way is to use advertising data filtering. All same advertising data only allow to be reported once even though they are from different devices.

Available options:

- Scan Duplicate By Device Address (BTDM_SCAN_DUPL_TYPE_DEVICE)
  This way is to use advertiser address filtering. The adv packet of the same address is only allowed to be reported once
- Scan Duplicate By Advertising Data (BTDM_SCAN_DUPL_TYPE_DATA)
  This way is to use advertising data filtering. All same advertising data only allow to be reported once even though they are from different devices.
- Scan Duplicate By Device Address And Advertising Data (BTDM_SCAN_DUPL_TYPE_DATA_DEVICE)
  This way is to use advertising data and device address filtering. All different adv packets with the same address are allowed to be reported.

CONFIG_BTDM_SCAN_DUPL_CACHE_SIZE

Maximum number of devices in scan duplicate filter

Found in: Component config > Bluetooth > CONFIG_BT_ENABLED > Bluetooth controller > CONFIG_BTDM_BLE_SCAN_DUPL

Maximum number of devices which can be recorded in scan duplicate filter. When the maximum amount of device in the filter is reached, the cache will be refreshed.

Range:

- from 10 to 1000 if *CONFIG_BTDM_BLE_SCAN_DUPL* && *CONFIG_BT_ENABLED*

Default value:

- 100 if *CONFIG_BTDM_BLE_SCAN_DUPL* && *CONFIG_BT_ENABLED*

CONFIG_BTDM_SCAN_DUPL_CACHE_REFRESH_PERIOD

Duplicate scan list refresh period (seconds)

Found in: Component config > Bluetooth > CONFIG_BT_ENABLED > Bluetooth controller > CONFIG_BTDM_BLE_SCAN_DUPL

If the period value is non-zero, the controller will periodically clear the device information stored in the scan duuplicate filter. If it is 0, the scan duuplicate filter will not be cleared until the scanning is disabled. Duplicate advertisements for this period should not be sent to the Host in advertising report events. There are two scenarios where the ADV packet will be repeatedly reported: 1. The duplicate scan cache is full, the controller will delete the oldest device information and add new device information. 2. When the refresh period is up, the controller will clear all device information and start filtering again.

Range:

- from 0 to 1000 if *CONFIG_BTDM_BLE_SCAN_DUPL* && *CONFIG_BT_ENABLED*

Default value:

- 0 if *CONFIG_BTDM_BLE_SCAN_DUPL* && *CONFIG_BT_ENABLED*

CONFIG_BTDM_BLE_MESH_SCAN_DUPL_EN

Special duplicate scan mechanism for BLE Mesh scan

Found in: Component config > Bluetooth > CONFIG_BT_ENABLED > Bluetooth controller > CONFIG_BTDM_BLE_SCAN_DUPL

This enables the BLE scan duplicate for special BLE Mesh scan.

Default value:

- No (disabled) if *CONFIG_BTDM_BLE_SCAN_DUPL* && *CONFIG_BT_ENABLED*

CONFIG_BTDM_MESH_DUPL_SCAN_CACHE_SIZE

Maximum number of Mesh adv packets in scan duplicate filter

Found in: Component config > Bluetooth > CONFIG_BT_ENABLED > Bluetooth controller > CONFIG_BTDM_BLE_SCAN_DUPL > CONFIG_BTDM_BLE_MESH_SCAN_DUPL_EN

Maximum number of adv packets which can be recorded in duplicate scan cache for BLE Mesh. When the maximum amount of device in the filter is reached, the cache will be refreshed.

Range:

- from 10 to 1000 if *CONFIG_BTDM_BLE_MESH_SCAN_DUPL_EN* && *CONFIG_BT_ENABLED*

Default value:

- 100 if *CONFIG_BTDM_BLE_MESH_SCAN_DUPL_EN* && *CONFIG_BT_ENABLED*

CONFIG_BTDM_CTRL_FULL_SCAN_SUPPORTED

BLE full scan feature supported

Found in: Component config > Bluetooth > CONFIG_BT_ENABLED > Bluetooth controller

The full scan function is mainly used to provide BLE scan performance. This is required for scenes with high scan performance requirements, such as BLE Mesh scenes.

Default value:

- Yes (enabled) if (BTDM_CTRL_MODE_BLE_ONLY || BTDM_CTRL_MODE_BTDM) && *CONFIG_BT_ENABLED*

CONFIG_BTDM_BLE_ADV_REPORT_FLOW_CTRL_SUPP

BLE adv report flow control supported

Found in: Component config > Bluetooth > CONFIG_BT_ENABLED > Bluetooth controller

The function is mainly used to enable flow control for advertising reports. When it is enabled, advertising reports will be discarded by the controller if the number of unprocessed advertising reports exceeds the size of BLE adv report flow control.

Default value:

- Yes (enabled) if (BTDM_CTRL_MODE_BTDM || BTDM_CTRL_MODE_BLE_ONLY) && *CONFIG_BT_ENABLED*

CONFIG_BTDM_BLE_ADV_REPORT_FLOW_CTRL_NUM

BLE adv report flow control number

Found in: Component config > Bluetooth > CONFIG_BT_ENABLED > Bluetooth controller > CONFIG_BTDM_BLE_ADV_REPORT_FLOW_CTRL_SUPP

The number of unprocessed advertising report that Bluedroid can save.If you set *BTDM_BLE_ADV_REPORT_FLOW_CTRL_NUM* to a small value, this may cause adv packets lost. If you set *BTDM_BLE_ADV_REPORT_FLOW_CTRL_NUM* to a large value, Bluedroid may cache a lot of adv packets and this may cause system memory run out. For example, if you set it to 50, the maximum memory consumed by host is 35 * 50 bytes. Please set *BTDM_BLE_ADV_REPORT_FLOW_CTRL_NUM* according to your system free memory and handle adv packets as fast as possible, otherwise it will cause adv packets lost.

Range:

- from 50 to 1000 if *CONFIG_BTDM_BLE_ADV_REPORT_FLOW_CTRL_SUPP* && *CONFIG_BT_ENABLED*

Default value:

- 100 if *CONFIG_BTDM_BLE_ADV_REPORT_FLOW_CTRL_SUPP* && *CONFIG_BT_ENABLED*

CONFIG_BTDM_BLE_ADV_REPORT_DISCARD_THRSHOLD

BLE adv lost event threshold value

Found in: Component config > Bluetooth > CONFIG_BT_ENABLED > Bluetooth controller > CONFIG_BTDM_BLE_ADV_REPORT_FLOW_CTRL_SUPP

When adv report flow control is enabled, The ADV lost event will be generated when the number of ADV packets lost in the controller reaches this threshold. It is better to set a larger value. If you set it to a small value or printf every adv lost event, it may cause adv packets lost more.

Range:

- from 1 to 1000 if *CONFIG_BTDM_BLE_ADV_REPORT_FLOW_CTRL_SUPP* && *CONFIG_BT_ENABLED*

Default value:

- 20 if *CONFIG_BTDM_BLE_ADV_REPORT_FLOW_CTRL_SUPP* && *CONFIG_BT_ENABLED*

CONFIG_BT_HOST

Bluetooth Host

Found in: Component config > Bluetooth > CONFIG_BT_ENABLED

This helps to choose Bluetooth host stack

Available options:

- Bluedroid - Dual-mode (BT_BLUEDROID_ENABLED)
  This option is recommended for classic Bluetooth or for dual-mode usecases
- NimBLE - BLE only (BT_NIMBLE_ENABLED)
  This option is recommended for BLE only usecases to save on memory
- Controller Only (BT_CONTROLLER_ONLY)
  This option is recommended when you want to communicate directly with the controller (without any host) or when you are using any other host stack not supported by Espressif (not mentioned here).

Bluedroid Options Contains:

- *CONFIG_BT_BLE_HOST_QUEUE_CONG_CHECK*
- *CONFIG_BT_BLUEDROID_MEM_DEBUG*
- *CONFIG_BT_BTU_TASK_STACK_SIZE*
- *CONFIG_BT_BTC_TASK_STACK_SIZE*
- *CONFIG_BT_BLE_ENABLED*
- *BT DEBUG LOG LEVEL*
- *CONFIG_BT_ACL_CONNECTIONS*
- *CONFIG_BT_ALLOCATION_FROM_SPIRAM_FIRST*
- *CONFIG_BT_CLASSIC_ENABLED*
- *CONFIG_BT_HID_HOST_ENABLED*
- *CONFIG_BT_STACK_NO_LOG*
- *CONFIG_BT_MULTI_CONNECTION_ENBALE*
- *CONFIG_BT_MAX_DEVICE_NAME_LEN*
- *CONFIG_BT_BLE_ACT_SCAN_REP_ADV_SCAN*
- *CONFIG_BT_SSP_ENABLED*
- *CONFIG_BT_BLUEDROID_PINNED_TO_CORE_CHOICE*
- *CONFIG_BT_BLE_ESTAB_LINK_CONN_TOUT*
- *CONFIG_BT_BLE_RPA_SUPPORTED*
- *CONFIG_BT_BLE_DYNAMIC_ENV_MEMORY*
- *CONFIG_BT_HFP_WBS_ENABLE*

CONFIG_BT_BTC_TASK_STACK_SIZE

Bluetooth event (callback to application) task stack size

Found in: Component config > Bluetooth > Bluedroid Options

This select btc task stack size

Default value:

- 3072 if BT_BLUEDROID_ENABLED && BT_BLUEDROID_ENABLED

CONFIG_BT_BLUEDROID_PINNED_TO_CORE_CHOICE

The cpu core which Bluedroid run

Found in: Component config > Bluetooth > Bluedroid Options

Which the cpu core to run Bluedroid. Can choose core0 and core1. Can not specify no-affinity.

Available options:

- Core 0 (PRO CPU) (BT_BLUEDROID_PINNED_TO_CORE_0)
- Core 1 (APP CPU) (BT_BLUEDROID_PINNED_TO_CORE_1)

CONFIG_BT_BTU_TASK_STACK_SIZE

Bluetooth Bluedroid Host Stack task stack size

Found in: Component config > Bluetooth > Bluedroid Options

This select btu task stack size

Default value:

- 4096 if BT_BLUEDROID_ENABLED && BT_BLUEDROID_ENABLED

CONFIG_BT_BLUEDROID_MEM_DEBUG

Bluedroid memory debug

Found in: Component config > Bluetooth > Bluedroid Options

Bluedroid memory debug

Default value:

- No (disabled) if BT_BLUEDROID_ENABLED && BT_BLUEDROID_ENABLED

CONFIG_BT_CLASSIC_ENABLED

Classic Bluetooth

Found in: Component config > Bluetooth > Bluedroid Options

For now this option needs "SMP_ENABLE" to be set to yes

Default value:

- No (disabled) if BT_BLUEDROID_ENABLED && BT_BLUEDROID_ENABLED

CONFIG_BT_A2DP_ENABLE

A2DP

Found in: Component config > Bluetooth > Bluedroid Options > CONFIG_BT_CLASSIC_ENABLED

Advanced Audio Distrubution Profile

Default value:

- No (disabled) if *CONFIG_BT_CLASSIC_ENABLED* && BT_BLUEDROID_ENABLED

CONFIG_BT_SPP_ENABLED

SPP

Found in: Component config > Bluetooth > Bluedroid Options > CONFIG_BT_CLASSIC_ENABLED

This enables the Serial Port Profile

Default value:

- No (disabled) if *CONFIG_BT_CLASSIC_ENABLED* && BT_BLUEDROID_ENABLED

CONFIG_BT_HFP_ENABLE

Hands Free/Handset Profile

Found in: Component config > Bluetooth > Bluedroid Options > CONFIG_BT_CLASSIC_ENABLED

Default value:

- No (disabled) if *CONFIG_BT_CLASSIC_ENABLED* && BT_BLUEDROID_ENABLED

CONFIG_BT_HFP_ROLE

Hands-free Profile Role configuration

Found in: Component config > Bluetooth > Bluedroid Options > CONFIG_BT_CLASSIC_ENABLED > CONFIG_BT_HFP_ENABLE

Available options:

- Hands Free Unit (BT_HFP_CLIENT_ENABLE)
- Audio Gateway (BT_HFP_AG_ENABLE)

CONFIG_BT_HFP_AUDIO_DATA_PATH

audio(SCO) data path

Found in: Component config > Bluetooth > Bluedroid Options > CONFIG_BT_CLASSIC_ENABLED > CONFIG_BT_HFP_ENABLE

SCO data path, i.e. HCI or PCM. This option is set using API "esp_bredr_sco_datapath_set" in Bluetooth host. Default SCO data path can also be set in Bluetooth Controller.

Available options:

- PCM (BT_HFP_AUDIO_DATA_PATH_PCM)
- HCI (BT_HFP_AUDIO_DATA_PATH_HCI)

CONFIG_BT_HFP_WBS_ENABLE

Wide Band Speech

Found in: Component config > Bluetooth > Bluedroid Options

This enables Wide Band Speech. Should disable it when SCO data path is PCM. Otherwise there will be no data transmited via GPIOs.

Default value:

- Yes (enabled) if BT_HFP_AUDIO_DATA_PATH_HCI && BT_BLUEDROID_ENABLED

CONFIG_BT_HID_HOST_ENABLED

Classic BT HID Host

Found in: Component config > Bluetooth > Bluedroid Options

This enables the BT HID Host

Default value:

- No (disabled) if *CONFIG_BT_CLASSIC_ENABLED* && BT_BLUEDROID_ENABLED

CONFIG_BT_SSP_ENABLED

Secure Simple Pairing

Found in: Component config > Bluetooth > Bluedroid Options

This enables the Secure Simple Pairing. If disable this option, Bluedroid will only support Legacy Pairing

Default value:

- Yes (enabled) if *CONFIG_BT_CLASSIC_ENABLED* && BT_BLUEDROID_ENABLED

CONFIG_BT_BLE_ENABLED

Bluetooth Low Energy

Found in: Component config > Bluetooth > Bluedroid Options

This enables Bluetooth Low Energy

Default value:

- Yes (enabled) if BT_BLUEDROID_ENABLED && BT_BLUEDROID_ENABLED

CONFIG_BT_GATTS_ENABLE

Include GATT server module(GATTS)

Found in: Component config > Bluetooth > Bluedroid Options > CONFIG_BT_BLE_ENABLED

This option can be disabled when the app work only on gatt client mode

Default value:

- Yes (enabled) if *CONFIG_BT_BLE_ENABLED* && BT_BLUEDROID_ENABLED

CONFIG_BT_GATTS_PPCP_CHAR_GAP

Enable Peripheral Preferred Connection Parameters characteristic in GAP service

Found in: Component config > Bluetooth > Bluedroid Options > CONFIG_BT_BLE_ENABLED > CONFIG_BT_GATTS_ENABLE

This enables "Peripheral Preferred Connection Parameters" characteristic (UUID: 0x2A04) in GAP service that has connection parameters like min/max connection interval, slave latency and supervision timeout multiplier

Default value:

- No (disabled) if *CONFIG_BT_GATTS_ENABLE* && BT_BLUEDROID_ENABLED

CONFIG_BT_BLE_BLUFI_ENABLE

Include blufi function

Found in: Component config > Bluetooth > Bluedroid Options > CONFIG_BT_BLE_ENABLED > CONFIG_BT_GATTS_ENABLE

This option can be close when the app does not require blufi function.

Default value:

- No (disabled) if *CONFIG_BT_GATTS_ENABLE* && BT_BLUEDROID_ENABLED

CONFIG_BT_GATT_MAX_SR_PROFILES

Max GATT Server Profiles

Found in: Component config > Bluetooth > Bluedroid Options > CONFIG_BT_BLE_ENABLED > CONFIG_BT_GATTS_ENABLE

Maximum GATT Server Profiles Count

Range:
- from 1 to 32 if *CONFIG_BT_GATTS_ENABLE* && BT_BLUEDROID_ENABLED && BT_BLUEDROID_ENABLED

Default value:
- 8 if *CONFIG_BT_GATTS_ENABLE* && BT_BLUEDROID_ENABLED && BT_BLUEDROID_ENABLED

CONFIG_BT_GATT_MAX_SR_ATTRIBUTES

Max GATT Service Attributes

Found in: Component config > Bluetooth > Bluedroid Options > CONFIG_BT_BLE_ENABLED > CONFIG_BT_GATTS_ENABLE

Maximum GATT Service Attributes Count

Range:
- from 1 to 500 if *CONFIG_BT_GATTS_ENABLE* && BT_BLUEDROID_ENABLED && BT_BLUEDROID_ENABLED

Default value:
- 100 if *CONFIG_BT_GATTS_ENABLE* && BT_BLUEDROID_ENABLED && BT_BLUEDROID_ENABLED

CONFIG_BT_GATTS_SEND_SERVICE_CHANGE_MODE

GATTS Service Change Mode

Found in: Component config > Bluetooth > Bluedroid Options > CONFIG_BT_BLE_ENABLED > CONFIG_BT_GATTS_ENABLE

Service change indication mode for GATT Server.

Available options:
- GATTS manually send service change indication (BT_GATTS_SEND_SERVICE_CHANGE_MANUAL)
  Manually send service change indication through API esp_ble_gatts_send_service_change_indication()
- GATTS automatically send service change indication (BT_GATTS_SEND_SERVICE_CHANGE_AUTO)
  Let Bluedroid handle the service change indication internally

CONFIG_BT_GATTC_ENABLE

Include GATT client module(GATTC)

Found in: Component config > Bluetooth > Bluedroid Options > CONFIG_BT_BLE_ENABLED

This option can be close when the app work only on gatt server mode

Default value:
- Yes (enabled) if *CONFIG_BT_BLE_ENABLED* && BT_BLUEDROID_ENABLED

CONFIG_BT_GATTC_MAX_CACHE_CHAR

Max gattc cache characteristic for discover

Found in: Component config > Bluetooth > Bluedroid Options > CONFIG_BT_BLE_ENABLED > CONFIG_BT_GATTC_ENABLE

Maximum GATTC cache characteristic count

Range:
- from 1 to 500 if *CONFIG_BT_GATTC_ENABLE* && BT_BLUEDROID_ENABLED

Default value:
- 40 if *CONFIG_BT_GATTC_ENABLE* && BT_BLUEDROID_ENABLED

CONFIG_BT_GATTC_CACHE_NVS_FLASH

Save gattc cache data to nvs flash

Found in: Component config > Bluetooth > Bluedroid Options > CONFIG_BT_BLE_ENABLED > CONFIG_BT_GATTC_ENABLE

This select can save gattc cache data to nvs flash

Default value:
- No (disabled) if *CONFIG_BT_GATTC_ENABLE* && BT_BLUEDROID_ENABLED

CONFIG_BT_GATTC_CONNECT_RETRY_COUNT

The number of attempts to reconnect if the connection establishment failed

Found in: Component config > Bluetooth > Bluedroid Options > CONFIG_BT_BLE_ENABLED > CONFIG_BT_GATTC_ENABLE

The number of attempts to reconnect if the connection establishment failed

Range:
- from 0 to 7 if *CONFIG_BT_GATTC_ENABLE* && BT_BLUEDROID_ENABLED

Default value:
- 3 if *CONFIG_BT_GATTC_ENABLE* && BT_BLUEDROID_ENABLED

CONFIG_BT_BLE_SMP_ENABLE

Include BLE security module(SMP)

Found in: Component config > Bluetooth > Bluedroid Options > CONFIG_BT_BLE_ENABLED

This option can be close when the app not used the ble security connect.

Default value:
- Yes (enabled) if *CONFIG_BT_BLE_ENABLED* && BT_BLUEDROID_ENABLED

CONFIG_BT_SMP_SLAVE_CON_PARAMS_UPD_ENABLE

Slave enable connection parameters update during pairing

Found in: Component config > Bluetooth > Bluedroid Options > CONFIG_BT_BLE_ENABLED > CONFIG_BT_BLE_SMP_ENABLE

In order to reduce the pairing time, slave actively initiates connection parameters update during pairing.

Default value:
- No (disabled) if *CONFIG_BT_BLE_SMP_ENABLE* && BT_BLUEDROID_ENABLED

CONFIG_BT_STACK_NO_LOG

Disable BT debug logs (minimize bin size)

Found in: Component config > Bluetooth > Bluedroid Options

This select can save the rodata code size

Default value:

- No (disabled) if BT_BLUEDROID_ENABLED && BT_BLUEDROID_ENABLED

BT DEBUG LOG LEVEL

Contains:

- *CONFIG_BT_LOG_A2D_TRACE_LEVEL*
- *CONFIG_BT_LOG_APPL_TRACE_LEVEL*
- *CONFIG_BT_LOG_AVCT_TRACE_LEVEL*
- *CONFIG_BT_LOG_AVDT_TRACE_LEVEL*
- *CONFIG_BT_LOG_AVRC_TRACE_LEVEL*
- *CONFIG_BT_LOG_BLUFI_TRACE_LEVEL*
- *CONFIG_BT_LOG_BNEP_TRACE_LEVEL*
- *CONFIG_BT_LOG_BTC_TRACE_LEVEL*
- *CONFIG_BT_LOG_BTIF_TRACE_LEVEL*
- *CONFIG_BT_LOG_BTM_TRACE_LEVEL*
- *CONFIG_BT_LOG_GAP_TRACE_LEVEL*
- *CONFIG_BT_LOG_GATT_TRACE_LEVEL*
- *CONFIG_BT_LOG_HCI_TRACE_LEVEL*
- *CONFIG_BT_LOG_HID_TRACE_LEVEL*
- *CONFIG_BT_LOG_L2CAP_TRACE_LEVEL*
- *CONFIG_BT_LOG_MCA_TRACE_LEVEL*
- *CONFIG_BT_LOG_OSI_TRACE_LEVEL*
- *CONFIG_BT_LOG_PAN_TRACE_LEVEL*
- *CONFIG_BT_LOG_RFCOMM_TRACE_LEVEL*
- *CONFIG_BT_LOG_SDP_TRACE_LEVEL*
- *CONFIG_BT_LOG_SMP_TRACE_LEVEL*

CONFIG_BT_LOG_HCI_TRACE_LEVEL

HCI layer

Found in: Component config > Bluetooth > Bluedroid Options > BT DEBUG LOG LEVEL

Define BT trace level for HCI layer

Available options:

- NONE (BT_LOG_HCI_TRACE_LEVEL_NONE)
- ERROR (BT_LOG_HCI_TRACE_LEVEL_ERROR)
- WARNING (BT_LOG_HCI_TRACE_LEVEL_WARNING)
- API (BT_LOG_HCI_TRACE_LEVEL_API)
- EVENT (BT_LOG_HCI_TRACE_LEVEL_EVENT)
- DEBUG (BT_LOG_HCI_TRACE_LEVEL_DEBUG)
- VERBOSE (BT_LOG_HCI_TRACE_LEVEL_VERBOSE)

CONFIG_BT_LOG_BTM_TRACE_LEVEL

BTM layer

Found in: Component config > Bluetooth > Bluedroid Options > BT DEBUG LOG LEVEL

Define BT trace level for BTM layer

Available options:

- NONE (BT_LOG_BTM_TRACE_LEVEL_NONE)

- ERROR (BT_LOG_BTM_TRACE_LEVEL_ERROR)
- WARNING (BT_LOG_BTM_TRACE_LEVEL_WARNING)
- API (BT_LOG_BTM_TRACE_LEVEL_API)
- EVENT (BT_LOG_BTM_TRACE_LEVEL_EVENT)
- DEBUG (BT_LOG_BTM_TRACE_LEVEL_DEBUG)
- VERBOSE (BT_LOG_BTM_TRACE_LEVEL_VERBOSE)

CONFIG_BT_LOG_L2CAP_TRACE_LEVEL

L2CAP layer

Found in: Component config > Bluetooth > Bluedroid Options > BT DEBUG LOG LEVEL

Define BT trace level for L2CAP layer

Available options:

- NONE (BT_LOG_L2CAP_TRACE_LEVEL_NONE)
- ERROR (BT_LOG_L2CAP_TRACE_LEVEL_ERROR)
- WARNING (BT_LOG_L2CAP_TRACE_LEVEL_WARNING)
- API (BT_LOG_L2CAP_TRACE_LEVEL_API)
- EVENT (BT_LOG_L2CAP_TRACE_LEVEL_EVENT)
- DEBUG (BT_LOG_L2CAP_TRACE_LEVEL_DEBUG)
- VERBOSE (BT_LOG_L2CAP_TRACE_LEVEL_VERBOSE)

CONFIG_BT_LOG_RFCOMM_TRACE_LEVEL

RFCOMM layer

Found in: Component config > Bluetooth > Bluedroid Options > BT DEBUG LOG LEVEL

Define BT trace level for RFCOMM layer

Available options:

- NONE (BT_LOG_RFCOMM_TRACE_LEVEL_NONE)
- ERROR (BT_LOG_RFCOMM_TRACE_LEVEL_ERROR)
- WARNING (BT_LOG_RFCOMM_TRACE_LEVEL_WARNING)
- API (BT_LOG_RFCOMM_TRACE_LEVEL_API)
- EVENT (BT_LOG_RFCOMM_TRACE_LEVEL_EVENT)
- DEBUG (BT_LOG_RFCOMM_TRACE_LEVEL_DEBUG)
- VERBOSE (BT_LOG_RFCOMM_TRACE_LEVEL_VERBOSE)

CONFIG_BT_LOG_SDP_TRACE_LEVEL

SDP layer

Found in: Component config > Bluetooth > Bluedroid Options > BT DEBUG LOG LEVEL

Define BT trace level for SDP layer

Available options:

- NONE (BT_LOG_SDP_TRACE_LEVEL_NONE)
- ERROR (BT_LOG_SDP_TRACE_LEVEL_ERROR)
- WARNING (BT_LOG_SDP_TRACE_LEVEL_WARNING)
- API (BT_LOG_SDP_TRACE_LEVEL_API)
- EVENT (BT_LOG_SDP_TRACE_LEVEL_EVENT)
- DEBUG (BT_LOG_SDP_TRACE_LEVEL_DEBUG)
- VERBOSE (BT_LOG_SDP_TRACE_LEVEL_VERBOSE)

CONFIG_BT_LOG_GAP_TRACE_LEVEL

GAP layer

Found in: Component config > Bluetooth > Bluedroid Options > BT DEBUG LOG LEVEL

Define BT trace level for GAP layer

Available options:

- NONE (BT_LOG_GAP_TRACE_LEVEL_NONE)
- ERROR (BT_LOG_GAP_TRACE_LEVEL_ERROR)
- WARNING (BT_LOG_GAP_TRACE_LEVEL_WARNING)
- API (BT_LOG_GAP_TRACE_LEVEL_API)
- EVENT (BT_LOG_GAP_TRACE_LEVEL_EVENT)
- DEBUG (BT_LOG_GAP_TRACE_LEVEL_DEBUG)
- VERBOSE (BT_LOG_GAP_TRACE_LEVEL_VERBOSE)

CONFIG_BT_LOG_BNEP_TRACE_LEVEL

BNEP layer

Found in: Component config > Bluetooth > Bluedroid Options > BT DEBUG LOG LEVEL

Define BT trace level for BNEP layer

Available options:

- NONE (BT_LOG_BNEP_TRACE_LEVEL_NONE)
- ERROR (BT_LOG_BNEP_TRACE_LEVEL_ERROR)
- WARNING (BT_LOG_BNEP_TRACE_LEVEL_WARNING)
- API (BT_LOG_BNEP_TRACE_LEVEL_API)
- EVENT (BT_LOG_BNEP_TRACE_LEVEL_EVENT)
- DEBUG (BT_LOG_BNEP_TRACE_LEVEL_DEBUG)
- VERBOSE (BT_LOG_BNEP_TRACE_LEVEL_VERBOSE)

CONFIG_BT_LOG_PAN_TRACE_LEVEL

PAN layer

Found in: Component config > Bluetooth > Bluedroid Options > BT DEBUG LOG LEVEL

Define BT trace level for PAN layer

Available options:

- NONE (BT_LOG_PAN_TRACE_LEVEL_NONE)
- ERROR (BT_LOG_PAN_TRACE_LEVEL_ERROR)
- WARNING (BT_LOG_PAN_TRACE_LEVEL_WARNING)
- API (BT_LOG_PAN_TRACE_LEVEL_API)
- EVENT (BT_LOG_PAN_TRACE_LEVEL_EVENT)
- DEBUG (BT_LOG_PAN_TRACE_LEVEL_DEBUG)
- VERBOSE (BT_LOG_PAN_TRACE_LEVEL_VERBOSE)

CONFIG_BT_LOG_A2D_TRACE_LEVEL

A2D layer

Found in: Component config > Bluetooth > Bluedroid Options > BT DEBUG LOG LEVEL

Define BT trace level for A2D layer

Available options:

- NONE (BT_LOG_A2D_TRACE_LEVEL_NONE)
- ERROR (BT_LOG_A2D_TRACE_LEVEL_ERROR)
- WARNING (BT_LOG_A2D_TRACE_LEVEL_WARNING)
- API (BT_LOG_A2D_TRACE_LEVEL_API)
- EVENT (BT_LOG_A2D_TRACE_LEVEL_EVENT)

- DEBUG (BT_LOG_A2D_TRACE_LEVEL_DEBUG)
- VERBOSE (BT_LOG_A2D_TRACE_LEVEL_VERBOSE)

CONFIG_BT_LOG_AVDT_TRACE_LEVEL

AVDT layer

Found in: Component config > Bluetooth > Bluedroid Options > BT DEBUG LOG LEVEL

Define BT trace level for AVDT layer

Available options:

- NONE (BT_LOG_AVDT_TRACE_LEVEL_NONE)
- ERROR (BT_LOG_AVDT_TRACE_LEVEL_ERROR)
- WARNING (BT_LOG_AVDT_TRACE_LEVEL_WARNING)
- API (BT_LOG_AVDT_TRACE_LEVEL_API)
- EVENT (BT_LOG_AVDT_TRACE_LEVEL_EVENT)
- DEBUG (BT_LOG_AVDT_TRACE_LEVEL_DEBUG)
- VERBOSE (BT_LOG_AVDT_TRACE_LEVEL_VERBOSE)

CONFIG_BT_LOG_AVCT_TRACE_LEVEL

AVCT layer

Found in: Component config > Bluetooth > Bluedroid Options > BT DEBUG LOG LEVEL

Define BT trace level for AVCT layer

Available options:

- NONE (BT_LOG_AVCT_TRACE_LEVEL_NONE)
- ERROR (BT_LOG_AVCT_TRACE_LEVEL_ERROR)
- WARNING (BT_LOG_AVCT_TRACE_LEVEL_WARNING)
- API (BT_LOG_AVCT_TRACE_LEVEL_API)
- EVENT (BT_LOG_AVCT_TRACE_LEVEL_EVENT)
- DEBUG (BT_LOG_AVCT_TRACE_LEVEL_DEBUG)
- VERBOSE (BT_LOG_AVCT_TRACE_LEVEL_VERBOSE)

CONFIG_BT_LOG_AVRC_TRACE_LEVEL

AVRC layer

Found in: Component config > Bluetooth > Bluedroid Options > BT DEBUG LOG LEVEL

Define BT trace level for AVRC layer

Available options:

- NONE (BT_LOG_AVRC_TRACE_LEVEL_NONE)
- ERROR (BT_LOG_AVRC_TRACE_LEVEL_ERROR)
- WARNING (BT_LOG_AVRC_TRACE_LEVEL_WARNING)
- API (BT_LOG_AVRC_TRACE_LEVEL_API)
- EVENT (BT_LOG_AVRC_TRACE_LEVEL_EVENT)
- DEBUG (BT_LOG_AVRC_TRACE_LEVEL_DEBUG)
- VERBOSE (BT_LOG_AVRC_TRACE_LEVEL_VERBOSE)

CONFIG_BT_LOG_MCA_TRACE_LEVEL

MCA layer

Found in: Component config > Bluetooth > Bluedroid Options > BT DEBUG LOG LEVEL

Define BT trace level for MCA layer

Available options:

- NONE (BT_LOG_MCA_TRACE_LEVEL_NONE)
- ERROR (BT_LOG_MCA_TRACE_LEVEL_ERROR)
- WARNING (BT_LOG_MCA_TRACE_LEVEL_WARNING)
- API (BT_LOG_MCA_TRACE_LEVEL_API)
- EVENT (BT_LOG_MCA_TRACE_LEVEL_EVENT)
- DEBUG (BT_LOG_MCA_TRACE_LEVEL_DEBUG)
- VERBOSE (BT_LOG_MCA_TRACE_LEVEL_VERBOSE)

CONFIG_BT_LOG_HID_TRACE_LEVEL

HID layer

Found in: Component config > Bluetooth > Bluedroid Options > BT DEBUG LOG LEVEL

Define BT trace level for HID layer

Available options:

- NONE (BT_LOG_HID_TRACE_LEVEL_NONE)
- ERROR (BT_LOG_HID_TRACE_LEVEL_ERROR)
- WARNING (BT_LOG_HID_TRACE_LEVEL_WARNING)
- API (BT_LOG_HID_TRACE_LEVEL_API)
- EVENT (BT_LOG_HID_TRACE_LEVEL_EVENT)
- DEBUG (BT_LOG_HID_TRACE_LEVEL_DEBUG)
- VERBOSE (BT_LOG_HID_TRACE_LEVEL_VERBOSE)

CONFIG_BT_LOG_APPL_TRACE_LEVEL

APPL layer

Found in: Component config > Bluetooth > Bluedroid Options > BT DEBUG LOG LEVEL

Define BT trace level for APPL layer

Available options:

- NONE (BT_LOG_APPL_TRACE_LEVEL_NONE)
- ERROR (BT_LOG_APPL_TRACE_LEVEL_ERROR)
- WARNING (BT_LOG_APPL_TRACE_LEVEL_WARNING)
- API (BT_LOG_APPL_TRACE_LEVEL_API)
- EVENT (BT_LOG_APPL_TRACE_LEVEL_EVENT)
- DEBUG (BT_LOG_APPL_TRACE_LEVEL_DEBUG)
- VERBOSE (BT_LOG_APPL_TRACE_LEVEL_VERBOSE)

CONFIG_BT_LOG_GATT_TRACE_LEVEL

GATT layer

Found in: Component config > Bluetooth > Bluedroid Options > BT DEBUG LOG LEVEL

Define BT trace level for GATT layer

Available options:

- NONE (BT_LOG_GATT_TRACE_LEVEL_NONE)
- ERROR (BT_LOG_GATT_TRACE_LEVEL_ERROR)
- WARNING (BT_LOG_GATT_TRACE_LEVEL_WARNING)
- API (BT_LOG_GATT_TRACE_LEVEL_API)
- EVENT (BT_LOG_GATT_TRACE_LEVEL_EVENT)
- DEBUG (BT_LOG_GATT_TRACE_LEVEL_DEBUG)
- VERBOSE (BT_LOG_GATT_TRACE_LEVEL_VERBOSE)

CONFIG_BT_LOG_SMP_TRACE_LEVEL

SMP layer

Found in: Component config > Bluetooth > Bluedroid Options > BT DEBUG LOG LEVEL

Define BT trace level for SMP layer

Available options:

- NONE (BT_LOG_SMP_TRACE_LEVEL_NONE)
- ERROR (BT_LOG_SMP_TRACE_LEVEL_ERROR)
- WARNING (BT_LOG_SMP_TRACE_LEVEL_WARNING)
- API (BT_LOG_SMP_TRACE_LEVEL_API)
- EVENT (BT_LOG_SMP_TRACE_LEVEL_EVENT)
- DEBUG (BT_LOG_SMP_TRACE_LEVEL_DEBUG)
- VERBOSE (BT_LOG_SMP_TRACE_LEVEL_VERBOSE)

CONFIG_BT_LOG_BTIF_TRACE_LEVEL

BTIF layer

Found in: Component config > Bluetooth > Bluedroid Options > BT DEBUG LOG LEVEL

Define BT trace level for BTIF layer

Available options:

- NONE (BT_LOG_BTIF_TRACE_LEVEL_NONE)
- ERROR (BT_LOG_BTIF_TRACE_LEVEL_ERROR)
- WARNING (BT_LOG_BTIF_TRACE_LEVEL_WARNING)
- API (BT_LOG_BTIF_TRACE_LEVEL_API)
- EVENT (BT_LOG_BTIF_TRACE_LEVEL_EVENT)
- DEBUG (BT_LOG_BTIF_TRACE_LEVEL_DEBUG)
- VERBOSE (BT_LOG_BTIF_TRACE_LEVEL_VERBOSE)

CONFIG_BT_LOG_BTC_TRACE_LEVEL

BTC layer

Found in: Component config > Bluetooth > Bluedroid Options > BT DEBUG LOG LEVEL

Define BT trace level for BTC layer

Available options:

- NONE (BT_LOG_BTC_TRACE_LEVEL_NONE)
- ERROR (BT_LOG_BTC_TRACE_LEVEL_ERROR)
- WARNING (BT_LOG_BTC_TRACE_LEVEL_WARNING)
- API (BT_LOG_BTC_TRACE_LEVEL_API)
- EVENT (BT_LOG_BTC_TRACE_LEVEL_EVENT)
- DEBUG (BT_LOG_BTC_TRACE_LEVEL_DEBUG)
- VERBOSE (BT_LOG_BTC_TRACE_LEVEL_VERBOSE)

CONFIG_BT_LOG_OSI_TRACE_LEVEL

OSI layer

Found in: Component config > Bluetooth > Bluedroid Options > BT DEBUG LOG LEVEL

Define BT trace level for OSI layer

Available options:

- NONE (BT_LOG_OSI_TRACE_LEVEL_NONE)
- ERROR (BT_LOG_OSI_TRACE_LEVEL_ERROR)
- WARNING (BT_LOG_OSI_TRACE_LEVEL_WARNING)
- API (BT_LOG_OSI_TRACE_LEVEL_API)

- EVENT (BT_LOG_OSI_TRACE_LEVEL_EVENT)
- DEBUG (BT_LOG_OSI_TRACE_LEVEL_DEBUG)
- VERBOSE (BT_LOG_OSI_TRACE_LEVEL_VERBOSE)

CONFIG_BT_LOG_BLUFI_TRACE_LEVEL

BLUFI layer

Found in: Component config > Bluetooth > Bluedroid Options > BT DEBUG LOG LEVEL

Define BT trace level for BLUFI layer

Available options:

- NONE (BT_LOG_BLUFI_TRACE_LEVEL_NONE)
- ERROR (BT_LOG_BLUFI_TRACE_LEVEL_ERROR)
- WARNING (BT_LOG_BLUFI_TRACE_LEVEL_WARNING)
- API (BT_LOG_BLUFI_TRACE_LEVEL_API)
- EVENT (BT_LOG_BLUFI_TRACE_LEVEL_EVENT)
- DEBUG (BT_LOG_BLUFI_TRACE_LEVEL_DEBUG)
- VERBOSE (BT_LOG_BLUFI_TRACE_LEVEL_VERBOSE)

CONFIG_BT_ACL_CONNECTIONS

BT/BLE MAX ACL CONNECTIONS(1~9)

Found in: Component config > Bluetooth > Bluedroid Options

Maximum BT/BLE connection count. The ESP32-C3/S3 chip supports a maximum of 10 instances, including ADV, SCAN and connections. The ESP32-C3/S3 chip can connect up to 9 devices if ADV or SCAN uses only one. If ADV and SCAN are both used, The ESP32-C3/S3 chip is connected to a maximum of 8 devices. Because Bluetooth cannot reclaim used instances once ADV or SCAN is used.

Range:

- from 1 to 9 if BT_BLUEDROID_ENABLED && BT_BLUEDROID_ENABLED

Default value:

- 4 if BT_BLUEDROID_ENABLED && BT_BLUEDROID_ENABLED

CONFIG_BT_MULTI_CONNECTION_ENBALE

Enable BLE multi-conections

Found in: Component config > Bluetooth > Bluedroid Options

Enable this option if there are multiple connections

Default value:

- Yes (enabled) if BT_BLUEDROID_ENABLED && BT_BLUEDROID_ENABLED

CONFIG_BT_ALLOCATION_FROM_SPIRAM_FIRST

BT/BLE will first malloc the memory from the PSRAM

Found in: Component config > Bluetooth > Bluedroid Options

This select can save the internal RAM if there have the PSRAM

Default value:

- No (disabled) if BT_BLUEDROID_ENABLED && BT_BLUEDROID_ENABLED

CONFIG_BT_BLE_DYNAMIC_ENV_MEMORY

Use dynamic memory allocation in BT/BLE stack

Found in: Component config > Bluetooth > Bluedroid Options

This select can make the allocation of memory will become more flexible

Default value:

- No (disabled) if BT_BLUEDROID_ENABLED && BT_BLUEDROID_ENABLED

CONFIG_BT_BLE_HOST_QUEUE_CONG_CHECK

BLE queue congestion check

Found in: Component config > Bluetooth > Bluedroid Options

When scanning and scan duplicate is not enabled, if there are a lot of adv packets around or application layer handling adv packets is slow, it will cause the controller memory to run out. if enabled, adv packets will be lost when host queue is congested.

Default value:

- No (disabled) if BT_BLUEDROID_ENABLED && BT_BLUEDROID_ENABLED

CONFIG_BT_BLE_ACT_SCAN_REP_ADV_SCAN

Report adv data and scan response individually when BLE active scan

Found in: Component config > Bluetooth > Bluedroid Options

Originally, when doing BLE active scan, Bluedroid will not report adv to application layer until receive scan response. This option is used to disable the behavior. When enable this option, Bluedroid will report adv data or scan response to application layer immediately.

Memory reserved at start of DRAM for Bluetooth stack

Default value:

- No (disabled) if BT_BLUEDROID_ENABLED && *CONFIG_BT_BLE_ENABLED* && BT_BLUEDROID_ENABLED

CONFIG_BT_BLE_ESTAB_LINK_CONN_TOUT

Timeout of BLE connection establishment

Found in: Component config > Bluetooth > Bluedroid Options

Bluetooth Connection establishment maximum time, if connection time exceeds this value, the connection establishment fails, ESP_GATTC_OPEN_EVT or ESP_GATTS_OPEN_EVT is triggered.

Range:

- from 1 to 60 if BT_BLUEDROID_ENABLED && BT_BLUEDROID_ENABLED

Default value:

- 30 if BT_BLUEDROID_ENABLED && BT_BLUEDROID_ENABLED

CONFIG_BT_MAX_DEVICE_NAME_LEN

length of bluetooth device name

Found in: Component config > Bluetooth > Bluedroid Options

Bluetooth Device name length shall be no larger than 248 octets, If the broadcast data cannot contain the complete device name, then only the shortname will be displayed, the rest parts that can't fit in will be truncated.

Range:

- from 32 to 248 if BT_BLUEDROID_ENABLED && BT_BLUEDROID_ENABLED

Default value:

- 32 if BT_BLUEDROID_ENABLED && BT_BLUEDROID_ENABLED

CONFIG_BT_BLE_RPA_SUPPORTED

Update RPA to Controller

Found in: Component config > Bluetooth > Bluedroid Options

This enables controller RPA list function. For ESP32, ESP32 only support network privacy mode. If this option is enabled, ESP32 will only accept advertising packets from peer devices that contain private address, HW will not receive the advertising packets contain identity address after IRK changed. If this option is disabled, address resolution will be performed in the host, so the functions that require controller to resolve address in the white list cannot be used. This option is disabled by default on ESP32, please enable or disable this option according to your own needs.

For BLE other chips, devices support network privacy mode and device privacy mode, users can switch the two modes according to their own needs. So this option is enabled by default.

Default value:

- No (disabled) if BT_BLUEDROID_ENABLED && BT_BLUEDROID_ENABLED

NimBLE Options Contains:

- *CONFIG_BT_NIMBLE_ACL_BUF_COUNT*
- *CONFIG_BT_NIMBLE_ACL_BUF_SIZE*
- *CONFIG_BT_NIMBLE_SVC_GAP_DEVICE_NAME*
- *CONFIG_BT_NIMBLE_HS_STOP_TIMEOUT_MS*
- *CONFIG_BT_NIMBLE_ROLE_BROADCASTER*
- *CONFIG_BT_NIMBLE_ROLE_CENTRAL*
- *CONFIG_BT_NIMBLE_MESH*
- *CONFIG_BT_NIMBLE_ROLE_OBSERVER*
- *CONFIG_BT_NIMBLE_ROLE_PERIPHERAL*
- *CONFIG_BT_NIMBLE_BLUFI_ENABLE*
- *CONFIG_BT_NIMBLE_ENABLE_CONN_REATTEMPT*
- *CONFIG_BT_NIMBLE_USE_ESP_TIMER*
- *CONFIG_BT_NIMBLE_DEBUG*
- *CONFIG_BT_NIMBLE_HS_FLOW_CTRL*
- *CONFIG_BT_NIMBLE_SVC_GAP_APPEARANCE*
- *CONFIG_BT_NIMBLE_HCI_EVT_BUF_SIZE*
- *CONFIG_BT_NIMBLE_HCI_EVT_HI_BUF_COUNT*
- *CONFIG_BT_NIMBLE_HCI_EVT_LO_BUF_COUNT*
- *CONFIG_BT_NIMBLE_GAP_DEVICE_NAME_MAX_LEN*
- *CONFIG_BT_NIMBLE_MAX_BONDS*
- *CONFIG_BT_NIMBLE_MAX_CCCDS*
- *CONFIG_BT_NIMBLE_MAX_CONNECTIONS*
- *CONFIG_BT_NIMBLE_L2CAP_COC_MAX_NUM*
- *CONFIG_BT_NIMBLE_MEM_ALLOC_MODE*
- *CONFIG_BT_NIMBLE_MSYS1_BLOCK_COUNT*
- *CONFIG_BT_NIMBLE_LOG_LEVEL*
- *CONFIG_BT_NIMBLE_TASK_STACK_SIZE*
- *CONFIG_BT_NIMBLE_CRYPTO_STACK_MBEDTLS*
- *CONFIG_BT_NIMBLE_NVS_PERSIST*
- *CONFIG_BT_NIMBLE_ATT_PREFERRED_MTU*
- *CONFIG_BT_NIMBLE_RPA_TIMEOUT*
- *CONFIG_BT_NIMBLE_SM_LEGACY*
- *CONFIG_BT_NIMBLE_SM_SC*
- *CONFIG_BT_NIMBLE_PINNED_TO_CORE_CHOICE*
- *CONFIG_BT_NIMBLE_SM_SC_DEBUG_KEYS*

CONFIG_BT_NIMBLE_MEM_ALLOC_MODE

Memory allocation strategy

Found in: Component config > Bluetooth > NimBLE Options

Allocation strategy for NimBLE host stack, essentially provides ability to allocate all required dynamic allocations from,

- Internal DRAM memory only
- External SPIRAM memory only
- Either internal or external memory based on default malloc() behavior in ESP-IDF
- Internal IRAM memory wherever applicable else internal DRAM

Available options:

- Internal memory (BT_NIMBLE_MEM_ALLOC_MODE_INTERNAL)
- External SPIRAM (BT_NIMBLE_MEM_ALLOC_MODE_EXTERNAL)
- Default alloc mode (BT_NIMBLE_MEM_ALLOC_MODE_DEFAULT)
- Internal IRAM (BT_NIMBLE_MEM_ALLOC_MODE_IRAM_8BIT)
  Allows to use IRAM memory region as 8bit accessible region.
  Every unaligned (8bit or 16bit) access will result in an exception and incur penalty of certain clock cycles per unaligned read/write.

CONFIG_BT_NIMBLE_LOG_LEVEL

NimBLE Host log verbosity

Found in: Component config > Bluetooth > NimBLE Options

Select NimBLE log level. Please make a note that the selected NimBLE log verbosity can not exceed the level set in "Component config –> Log output –> Default log verbosity".

Available options:

- No logs (BT_NIMBLE_LOG_LEVEL_NONE)
- Error logs (BT_NIMBLE_LOG_LEVEL_ERROR)
- Warning logs (BT_NIMBLE_LOG_LEVEL_WARNING)
- Info logs (BT_NIMBLE_LOG_LEVEL_INFO)
- Debug logs (BT_NIMBLE_LOG_LEVEL_DEBUG)

CONFIG_BT_NIMBLE_MAX_CONNECTIONS

Maximum number of concurrent connections

Found in: Component config > Bluetooth > NimBLE Options

Defines maximum number of concurrent BLE connections. For ESP32, user is expected to configure BTDM_CTRL_BLE_MAX_CONN from controller menu along with this option. Similarly for ESP32-C3 or ESP32-S3, user is expected to configure BT_CTRL_BLE_MAX_ACT from controller menu.

Range:

- from 1 to 9 if BT_NIMBLE_ENABLED && BT_NIMBLE_ENABLED

Default value:

- 3 if BT_NIMBLE_ENABLED && BT_NIMBLE_ENABLED

CONFIG_BT_NIMBLE_MAX_BONDS

Maximum number of bonds to save across reboots

Found in: Component config > Bluetooth > NimBLE Options

Defines maximum number of bonds to save for peer security and our security

Default value:

- 3 if BT_NIMBLE_ENABLED && BT_NIMBLE_ENABLED

CONFIG_BT_NIMBLE_MAX_CCCDS

Maximum number of CCC descriptors to save across reboots

Found in: Component config > Bluetooth > NimBLE Options

Defines maximum number of CCC descriptors to save

Default value:

- 8 if BT_NIMBLE_ENABLED && BT_NIMBLE_ENABLED

CONFIG_BT_NIMBLE_L2CAP_COC_MAX_NUM

Maximum number of connection oriented channels

Found in: Component config > Bluetooth > NimBLE Options

Defines maximum number of BLE Connection Oriented Channels. When set to (0), BLE COC is not compiled in

Range:

- from 0 to 9 if BT_NIMBLE_ENABLED && BT_NIMBLE_ENABLED

Default value:

- 0 if BT_NIMBLE_ENABLED && BT_NIMBLE_ENABLED

CONFIG_BT_NIMBLE_PINNED_TO_CORE_CHOICE

The CPU core on which NimBLE host will run

Found in: Component config > Bluetooth > NimBLE Options

The CPU core on which NimBLE host will run. You can choose Core 0 or Core 1. Cannot specify no-affinity

Available options:

- Core 0 (PRO CPU) (BT_NIMBLE_PINNED_TO_CORE_0)
- Core 1 (APP CPU) (BT_NIMBLE_PINNED_TO_CORE_1)

CONFIG_BT_NIMBLE_TASK_STACK_SIZE

NimBLE Host task stack size

Found in: Component config > Bluetooth > NimBLE Options

This configures stack size of NimBLE host task

Default value:

- 5120 if *CONFIG_BLE_MESH* && BT_NIMBLE_ENABLED && BT_NIMBLE_ENABLED
- 4096 if BT_NIMBLE_ENABLED && BT_NIMBLE_ENABLED

CONFIG_BT_NIMBLE_ROLE_CENTRAL

Enable BLE Central role

Found in: Component config > Bluetooth > NimBLE Options

Default value:

- Yes (enabled) if BT_NIMBLE_ENABLED && BT_NIMBLE_ENABLED

CONFIG_BT_NIMBLE_ROLE_PERIPHERAL

Enable BLE Peripheral role

Found in: Component config > Bluetooth > NimBLE Options

Default value:

- Yes (enabled) if BT_NIMBLE_ENABLED && BT_NIMBLE_ENABLED

CONFIG_BT_NIMBLE_ROLE_BROADCASTER

Enable BLE Broadcaster role

Found in: Component config > Bluetooth > NimBLE Options

Default value:

- Yes (enabled) if BT_NIMBLE_ENABLED && BT_NIMBLE_ENABLED

CONFIG_BT_NIMBLE_ROLE_OBSERVER

Enable BLE Observer role

Found in: Component config > Bluetooth > NimBLE Options

Default value:

- Yes (enabled) if BT_NIMBLE_ENABLED && BT_NIMBLE_ENABLED

CONFIG_BT_NIMBLE_NVS_PERSIST

Persist the BLE Bonding keys in NVS

Found in: Component config > Bluetooth > NimBLE Options

Enable this flag to make bonding persistent across device reboots

Default value:

- Yes (enabled) if BT_NIMBLE_ENABLED && BT_NIMBLE_ENABLED

CONFIG_BT_NIMBLE_SM_LEGACY

Security manager legacy pairing

Found in: Component config > Bluetooth > NimBLE Options

Enable security manager legacy pairing

Default value:

- Yes (enabled) if BT_NIMBLE_ENABLED && BT_NIMBLE_ENABLED

CONFIG_BT_NIMBLE_SM_SC

Security manager secure connections (4.2)

Found in: Component config > Bluetooth > NimBLE Options

Enable security manager secure connections

Default value:

- Yes (enabled) if BT_NIMBLE_ENABLED && BT_NIMBLE_ENABLED

CONFIG_BT_NIMBLE_DEBUG

Enable extra runtime asserts and host debugging

Found in: Component config > Bluetooth > NimBLE Options

This enables extra runtime asserts and host debugging

Default value:

- No (disabled) if BT_NIMBLE_ENABLED && BT_NIMBLE_ENABLED

CONFIG_BT_NIMBLE_SM_SC_DEBUG_KEYS

Use predefined public-private key pair

Found in: Component config > Bluetooth > NimBLE Options

If this option is enabled, SM uses predefined DH key pair as described in Core Specification, Vol. 3, Part H, 2.3.5.6.1. This allows to decrypt air traffic easily and thus should only be used for debugging.

Default value:

- No (disabled) if *CONFIG_BT_NIMBLE_SM_SC* && BT_NIMBLE_ENABLED

CONFIG_BT_NIMBLE_SVC_GAP_DEVICE_NAME

BLE GAP default device name

Found in: Component config > Bluetooth > NimBLE Options

The Device Name characteristic shall contain the name of the device as an UTF-8 string. This name can be changed by using API ble_svc_gap_device_name_set()

Default value:

- “nimble” if BT_NIMBLE_ENABLED && BT_NIMBLE_ENABLED

CONFIG_BT_NIMBLE_GAP_DEVICE_NAME_MAX_LEN

Maximum length of BLE device name in octets

Found in: Component config > Bluetooth > NimBLE Options

Device Name characteristic value shall be 0 to 248 octets in length

Default value:

- 31 if BT_NIMBLE_ENABLED && BT_NIMBLE_ENABLED

CONFIG_BT_NIMBLE_ATT_PREFERRED_MTU

Preferred MTU size in octets

Found in: Component config > Bluetooth > NimBLE Options

This is the default value of ATT MTU indicated by the device during an ATT MTU exchange. This value can be changed using API ble_att_set_preferred_mtu()

Default value:

- 256 if BT_NIMBLE_ENABLED && BT_NIMBLE_ENABLED

CONFIG_BT_NIMBLE_SVC_GAP_APPEARANCE

External appearance of the device

Found in: Component config > Bluetooth > NimBLE Options

Standard BLE GAP Appearance value in HEX format e.g. 0x02C0

Default value:

- 0 if BT_NIMBLE_ENABLED && BT_NIMBLE_ENABLED

CONFIG_BT_NIMBLE_ACL_BUF_COUNT

ACL Buffer count

Found in: Component config > Bluetooth > NimBLE Options

The number of ACL data buffers.

Default value:

- 20 if BT_NIMBLE_ENABLED && BT_NIMBLE_ENABLED

CONFIG_BT_NIMBLE_ACL_BUF_SIZE

ACL Buffer size

Found in: Component config > Bluetooth > NimBLE Options

This is the maximum size of the data portion of HCI ACL data packets. It does not include the HCI data header (of 4 bytes)

Default value:

- 255 if BT_NIMBLE_ENABLED && BT_NIMBLE_ENABLED

CONFIG_BT_NIMBLE_HCI_EVT_BUF_SIZE

HCI Event Buffer size

Found in: Component config > Bluetooth > NimBLE Options

This is the size of each HCI event buffer in bytes. In case of extended advertising, packets can be fragmented. 257 bytes is the maximum size of a packet.

Default value:

- 70 if BT_NIMBLE_ENABLED && BT_NIMBLE_ENABLED

CONFIG_BT_NIMBLE_HCI_EVT_HI_BUF_COUNT

High Priority HCI Event Buffer count

Found in: Component config > Bluetooth > NimBLE Options

This is the high priority HCI events' buffer size. High-priority event buffers are for everything except advertising reports. If there are no free high-priority event buffers then host will try to allocate a low-priority buffer instead

Default value:

- 30 if BT_NIMBLE_ENABLED && BT_NIMBLE_ENABLED

CONFIG_BT_NIMBLE_HCI_EVT_LO_BUF_COUNT

Low Priority HCI Event Buffer count

Found in: Component config > Bluetooth > NimBLE Options

This is the low priority HCI events' buffer size. Low-priority event buffers are only used for advertising reports. If there are no free low-priority event buffers, then an incoming advertising report will get dropped

Default value:

- 8 if BT_NIMBLE_ENABLED && BT_NIMBLE_ENABLED

CONFIG_BT_NIMBLE_MSYS1_BLOCK_COUNT

MSYS_1 Block Count

Found in: Component config > Bluetooth > NimBLE Options

MSYS is a system level mbuf registry. For prepare write & prepare responses MBUFs are allocated out of msys_1 pool. For NIMBLE_MESH enabled cases, this block count is increased by 8 than user defined count.

Default value:

- 12 if BT_NIMBLE_ENABLED && BT_NIMBLE_ENABLED

CONFIG_BT_NIMBLE_HS_FLOW_CTRL

Enable Host Flow control

Found in: Component config > Bluetooth > NimBLE Options

Enable Host Flow control

Default value:

- Yes (enabled) if BT_NIMBLE_ENABLED && BT_NIMBLE_ENABLED

CONFIG_BT_NIMBLE_HS_FLOW_CTRL_ITVL

Host Flow control interval

Found in: Component config > Bluetooth > NimBLE Options > CONFIG_BT_NIMBLE_HS_FLOW_CTRL

Host flow control interval in msecs

Default value:

- 1000 if *CONFIG_BT_NIMBLE_HS_FLOW_CTRL* && BT_NIMBLE_ENABLED

CONFIG_BT_NIMBLE_HS_FLOW_CTRL_THRESH

Host Flow control threshold

Found in: Component config > Bluetooth > NimBLE Options > CONFIG_BT_NIMBLE_HS_FLOW_CTRL

Host flow control threshold, if the number of free buffers are at or below this threshold, send an immediate number-of-completed-packets event

Default value:

- 2 if *CONFIG_BT_NIMBLE_HS_FLOW_CTRL* && BT_NIMBLE_ENABLED

CONFIG_BT_NIMBLE_HS_FLOW_CTRL_TX_ON_DISCONNECT

Host Flow control on disconnect

Found in: Component config > Bluetooth > NimBLE Options > CONFIG_BT_NIMBLE_HS_FLOW_CTRL

Enable this option to send number-of-completed-packets event to controller after disconnection

Default value:

- Yes (enabled) if *CONFIG_BT_NIMBLE_HS_FLOW_CTRL* && BT_NIMBLE_ENABLED

CONFIG_BT_NIMBLE_RPA_TIMEOUT

RPA timeout in seconds

Found in: Component config > Bluetooth > NimBLE Options

Time interval between RPA address change. This is applicable in case of Host based RPA

Range:

- from 1 to 41400 if BT_NIMBLE_ENABLED && BT_NIMBLE_ENABLED

Default value:

- 900 if BT_NIMBLE_ENABLED && BT_NIMBLE_ENABLED

CONFIG_BT_NIMBLE_MESH

Enable BLE mesh functionality

Found in: Component config > Bluetooth > NimBLE Options

Enable BLE Mesh example present in upstream mynewt-nimble and not maintained by Espressif.

IDF maintains ESP-BLE-MESH as the official Mesh solution. Please refer to ESP-BLE-MESH guide at: :doc:../esp32/api-guides/esp-ble-mesh/ble-mesh-index“

Default value:

- No (disabled) if BT_NIMBLE_ENABLED && BT_NIMBLE_ENABLED

Contains:

- *CONFIG_BT_NIMBLE_MESH_PROVISIONER*
- *CONFIG_BT_NIMBLE_MESH_PROV*
- *CONFIG_BT_NIMBLE_MESH_GATT_PROXY*
- *CONFIG_BT_NIMBLE_MESH_FRIEND*
- *CONFIG_BT_NIMBLE_MESH_LOW_POWER*
- *CONFIG_BT_NIMBLE_MESH_PROXY*
- *CONFIG_BT_NIMBLE_MESH_RELAY*
- *CONFIG_BT_NIMBLE_MESH_DEVICE_NAME*
- *CONFIG_BT_NIMBLE_MESH_NODE_COUNT*

CONFIG_BT_NIMBLE_MESH_PROXY

Enable mesh proxy functionality

Found in: Component config > Bluetooth > NimBLE Options > CONFIG_BT_NIMBLE_MESH

Enable proxy. This is automatically set whenever NIMBLE_MESH_PB_GATT or NIMBLE_MESH_GATT_PROXY is set

Default value:

- No (disabled) if *CONFIG_BT_NIMBLE_MESH* && BT_NIMBLE_ENABLED

CONFIG_BT_NIMBLE_MESH_PROV

Enable BLE mesh provisioning

Found in: Component config > Bluetooth > NimBLE Options > CONFIG_BT_NIMBLE_MESH

Enable mesh provisioning

Default value:

- Yes (enabled) if *CONFIG_BT_NIMBLE_MESH* && BT_NIMBLE_ENABLED

CONFIG_BT_NIMBLE_MESH_PB_ADV

Enable mesh provisioning over advertising bearer

Found in: Component config > Bluetooth > NimBLE Options > CONFIG_BT_NIMBLE_MESH > CONFIG_BT_NIMBLE_MESH_PROV

Enable this option to allow the device to be provisioned over the advertising bearer

Default value:

- Yes (enabled) if *CONFIG_BT_NIMBLE_MESH_PROV* && BT_NIMBLE_ENABLED

CONFIG_BT_NIMBLE_MESH_PB_GATT

Enable mesh provisioning over GATT bearer

Found in: Component config > Bluetooth > NimBLE Options > CONFIG_BT_NIMBLE_MESH > CONFIG_BT_NIMBLE_MESH_PROV

Enable this option to allow the device to be provisioned over the GATT bearer

Default value:

- Yes (enabled) if *CONFIG_BT_NIMBLE_MESH_PROV* && BT_NIMBLE_ENABLED

CONFIG_BT_NIMBLE_MESH_GATT_PROXY

Enable GATT Proxy functionality

Found in: Component config > Bluetooth > NimBLE Options > CONFIG_BT_NIMBLE_MESH

This option enables support for the Mesh GATT Proxy Service, i.e. the ability to act as a proxy between a Mesh GATT Client and a Mesh network

Default value:

- Yes (enabled) if *CONFIG_BT_NIMBLE_MESH* && BT_NIMBLE_ENABLED

CONFIG_BT_NIMBLE_MESH_RELAY

Enable mesh relay functionality

Found in: Component config > Bluetooth > NimBLE Options > CONFIG_BT_NIMBLE_MESH

Support for acting as a Mesh Relay Node

Default value:

- No (disabled) if *CONFIG_BT_NIMBLE_MESH* && BT_NIMBLE_ENABLED

CONFIG_BT_NIMBLE_MESH_LOW_POWER

Enable mesh low power mode

Found in: Component config > Bluetooth > NimBLE Options > CONFIG_BT_NIMBLE_MESH

Enable this option to be able to act as a Low Power Node

Default value:

- No (disabled) if *CONFIG_BT_NIMBLE_MESH* && BT_NIMBLE_ENABLED

CONFIG_BT_NIMBLE_MESH_FRIEND

Enable mesh friend functionality

Found in: Component config > Bluetooth > NimBLE Options > CONFIG_BT_NIMBLE_MESH

Enable this option to be able to act as a Friend Node

Default value:

- No (disabled) if *CONFIG_BT_NIMBLE_MESH* && BT_NIMBLE_ENABLED

CONFIG_BT_NIMBLE_MESH_DEVICE_NAME

Set mesh device name

Found in: Component config > Bluetooth > NimBLE Options > CONFIG_BT_NIMBLE_MESH

This value defines Bluetooth Mesh device/node name

Default value:

- “nimble-mesh-node” if *CONFIG_BT_NIMBLE_MESH* && BT_NIMBLE_ENABLED

CONFIG_BT_NIMBLE_MESH_NODE_COUNT

Set mesh node count

Found in: Component config > Bluetooth > NimBLE Options > CONFIG_BT_NIMBLE_MESH

Defines mesh node count.

Default value:

- 1 if *CONFIG_BT_NIMBLE_MESH* && BT_NIMBLE_ENABLED

CONFIG_BT_NIMBLE_MESH_PROVISIONER

Enable BLE mesh provisioner

Found in: Component config > Bluetooth > NimBLE Options > CONFIG_BT_NIMBLE_MESH

Enable mesh provisioner.

Default value:

- 0 if *CONFIG_BT_NIMBLE_MESH* && BT_NIMBLE_ENABLED

CONFIG_BT_NIMBLE_CRYPTO_STACK_MBEDTLS

Override TinyCrypt with mbedTLS for crypto computations

Found in: Component config > Bluetooth > NimBLE Options

Enable this option to choose mbedTLS instead of TinyCrypt for crypto computations.

Default value:

- Yes (enabled) if BT_NIMBLE_ENABLED && BT_NIMBLE_ENABLED

CONFIG_BT_NIMBLE_HS_STOP_TIMEOUT_MS

BLE host stop timeout in msec

Found in: Component config > Bluetooth > NimBLE Options

BLE Host stop procedure timeout in milliseconds.

Default value:

- 2000 if BT_NIMBLE_ENABLED && BT_NIMBLE_ENABLED

CONFIG_BT_NIMBLE_ENABLE_CONN_REATTEMPT

Enable connection reattempts on connection establishment error

Found in: Component config > Bluetooth > NimBLE Options

Enable to make the NimBLE host to reattempt GAP connection on connection establishment failure.

Default value:

- No (disabled) if BT_NIMBLE_ENABLED

CONFIG_BT_NIMBLE_MAX_CONN_REATTEMPT

Maximum number connection reattempts

Found in: Component config > Bluetooth > NimBLE Options > CONFIG_BT_NIMBLE_ENABLE_CONN_REATTEMPT

Defines maximum number of connection reattempts.

Range:

- from 1 to 7 if BT_NIMBLE_ENABLED && *CONFIG_BT_NIMBLE_ENABLE_CONN_REATTEMPT* && BT_NIMBLE_ENABLED

Default value:

- 3 if BT_NIMBLE_ENABLED && *CONFIG_BT_NIMBLE_ENABLE_CONN_REATTEMPT* && BT_NIMBLE_ENABLED

CONFIG_BT_NIMBLE_USE_ESP_TIMER

Enable Esp Timer for Nimble

Found in: Component config > Bluetooth > NimBLE Options

Set this option to use Esp Timer which has higher priority timer instead of FreeRTOS timer

Default value:

- Yes (enabled) if BT_NIMBLE_ENABLED

CONFIG_BT_NIMBLE_BLUFI_ENABLE

Enable blufi functionality

Found in: Component config > Bluetooth > NimBLE Options

Set this option to enable blufi functionality.

Default value:

- No (disabled) if BT_NIMBLE_ENABLED && BT_NIMBLE_ENABLED

CONFIG_BLE_MESH

ESP BLE Mesh Support

Found in: Component config

This option enables ESP BLE Mesh support. The specific features that are available may depend on other features that have been enabled in the stack, such as Bluetooth Support, Bluedroid Support & GATT support.

Contains:

- *BLE Mesh and BLE coexistence support*
- *CONFIG_BLE_MESH_GATT_PROXY_CLIENT*
- *CONFIG_BLE_MESH_GATT_PROXY_SERVER*
- *BLE Mesh NET BUF DEBUG LOG LEVEL*
- *CONFIG_BLE_MESH_PROV*
- *CONFIG_BLE_MESH_PROXY*
- *BLE Mesh specific test option*
- *BLE Mesh STACK DEBUG LOG LEVEL*
- *CONFIG_BLE_MESH_NO_LOG*
- *CONFIG_BLE_MESH_IVU_DIVIDER*
- *CONFIG_BLE_MESH_FAST_PROV*
- *CONFIG_BLE_MESH_FREERTOS_STATIC_ALLOC*
- *CONFIG_BLE_MESH_CRPL*
- *CONFIG_BLE_MESH_RX_SDU_MAX*
- *CONFIG_BLE_MESH_MODEL_KEY_COUNT*
- *CONFIG_BLE_MESH_APP_KEY_COUNT*
- *CONFIG_BLE_MESH_MODEL_GROUP_COUNT*
- *CONFIG_BLE_MESH_LABEL_COUNT*
- *CONFIG_BLE_MESH_SUBNET_COUNT*
- *CONFIG_BLE_MESH_TX_SEG_MAX*
- *CONFIG_BLE_MESH_RX_SEG_MSG_COUNT*
- *CONFIG_BLE_MESH_TX_SEG_MSG_COUNT*
- *CONFIG_BLE_MESH_MEM_ALLOC_MODE*
- *CONFIG_BLE_MESH_MSG_CACHE_SIZE*

- *CONFIG_BLE_MESH_ADV_BUF_COUNT*
- *CONFIG_BLE_MESH_PB_GATT*
- *CONFIG_BLE_MESH_PB_ADV*
- *CONFIG_BLE_MESH_IVU_RECOVERY_IVI*
- *CONFIG_BLE_MESH_RELAY*
- *CONFIG_BLE_MESH_SETTINGS*
- *CONFIG_BLE_MESH_DEINIT*
- *CONFIG_BLE_MESH_USE_DUPLICATE_SCAN*
- *Support for BLE Mesh Client/Server models*
- *Support for BLE Mesh Foundation models*
- *CONFIG_BLE_MESH_NODE*
- *CONFIG_BLE_MESH_PROVISIONER*
- *CONFIG_BLE_MESH_FRIEND*
- *CONFIG_BLE_MESH_LOW_POWER*
- *CONFIG_BLE_MESH_HCI_5_0*
- *CONFIG_BLE_MESH_IV_UPDATE_TEST*
- *CONFIG_BLE_MESH_CLIENT_MSG_TIMEOUT*

CONFIG_BLE_MESH_HCI_5_0

Support sending 20ms non-connectable adv packets

Found in: Component config > CONFIG_BLE_MESH

It is a temporary solution and needs further modifications.

Default value:

- Yes (enabled) if *CONFIG_BLE_MESH*

CONFIG_BLE_MESH_USE_DUPLICATE_SCAN

Support Duplicate Scan in BLE Mesh

Found in: Component config > CONFIG_BLE_MESH

Enable this option to allow using specific duplicate scan filter in BLE Mesh, and Scan Duplicate Type must be set by choosing the option in the Bluetooth Controller section in menuconfig, which is “Scan Duplicate By Device Address and Advertising Data”.

Default value:

- Yes (enabled) if BT_BLUEDROID_ENABLED && *CONFIG_BLE_MESH*

CONFIG_BLE_MESH_MEM_ALLOC_MODE

Memory allocation strategy

Found in: Component config > CONFIG_BLE_MESH

Allocation strategy for BLE Mesh stack, essentially provides ability to allocate all required dynamic allocations from,

- Internal DRAM memory only
- External SPIRAM memory only
- Either internal or external memory based on default malloc() behavior in ESP-IDF
- Internal IRAM memory wherever applicable else internal DRAM

Recommended mode here is always internal (*), since that is most preferred from security perspective. But if application requirement does not allow sufficient free internal memory then alternate mode can be selected.

(*) In case of ESP32-S2/ESP32-S3, hardware allows encryption of external SPIRAM contents provided hardware flash encryption feature is enabled. In that case, using external SPIRAM allocation strategy is also safe choice from security perspective.

Available options:

- Internal DRAM (BLE_MESH_MEM_ALLOC_MODE_INTERNAL)
- External SPIRAM (BLE_MESH_MEM_ALLOC_MODE_EXTERNAL)
- Default alloc mode (BLE_MESH_MEM_ALLOC_MODE_DEFAULT)
  Enable this option to use the default memory allocation strategy when external SPIRAM is enabled. See the SPIRAM options for more details.
- Internal IRAM (BLE_MESH_MEM_ALLOC_MODE_IRAM_8BIT)
  Allows to use IRAM memory region as 8bit accessible region. Every unaligned (8bit or 16bit) access will result in an exception and incur penalty of certain clock cycles per unaligned read/write.

CONFIG_BLE_MESH_FREERTOS_STATIC_ALLOC

Enable FreeRTOS static allocation

Found in: Component config > CONFIG_BLE_MESH

Enable this option to use FreeRTOS static allocation APIs for BLE Mesh, which provides the ability to use different dynamic memory (i.e. SPIRAM or IRAM) for FreeRTOS objects. If this option is disabled, the FreeRTOS static allocation APIs will not be used, and internal DRAM will be allocated for FreeRTOS objects.

Default value:

- No (disabled) if (*CONFIG_ESP32_SPIRAM_SUPPORT* || *CONFIG_ESP32_IRAM_AS_8BIT_ACCESSIBLE_MEMORY*) && *CONFIG_BLE_MESH*

CONFIG_BLE_MESH_FREERTOS_STATIC_ALLOC_MODE

Memory allocation for FreeRTOS objects

Found in: Component config > CONFIG_BLE_MESH > CONFIG_BLE_MESH_FREERTOS_STATIC_ALLOC

Choose the memory to be used for FreeRTOS objects.

Available options:

- External SPIRAM (BLE_MESH_FREERTOS_STATIC_ALLOC_EXTERNAL)
  If enabled, BLE Mesh allocates dynamic memory from external SPIRAM for FreeRTOS objects, i.e. mutex, queue, and task stack. External SPIRAM can only be used for task stack when SPIRAM_ALLOW_STACK_EXTERNAL_MEMORY is enabled. See the SPIRAM options for more details.
- Internal IRAM (BLE_MESH_FREERTOS_STATIC_ALLOC_IRAM_8BIT)
  If enabled, BLE Mesh allocates dynamic memory from internal IRAM for FreeRTOS objects, i.e. mutex, queue. Note: IRAM region cannot be used as task stack.

CONFIG_BLE_MESH_DEINIT

Support de-initialize BLE Mesh stack

Found in: Component config > CONFIG_BLE_MESH

If enabled, users can use the function esp_ble_mesh_deinit() to de-initialize the whole BLE Mesh stack.

Default value:

- Yes (enabled) if *CONFIG_BLE_MESH*

BLE Mesh and BLE coexistence support Contains:

- *CONFIG_BLE_MESH_SUPPORT_BLE_SCAN*
- *CONFIG_BLE_MESH_SUPPORT_BLE_ADV*

CONFIG_BLE_MESH_SUPPORT_BLE_ADV

Support sending normal BLE advertising packets

Found in: Component config > CONFIG_BLE_MESH > BLE Mesh and BLE coexistence support

When selected, users can send normal BLE advertising packets with specific API.

Default value:

- No (disabled) if *CONFIG_BLE_MESH*

CONFIG_BLE_MESH_BLE_ADV_BUF_COUNT

Number of advertising buffers for BLE advertising packets

Found in: Component config > CONFIG_BLE_MESH > BLE Mesh and BLE coexistence support > CONFIG_BLE_MESH_SUPPORT_BLE_ADV

Number of advertising buffers for BLE packets available.

Range:

- from 1 to 255 if *CONFIG_BLE_MESH_SUPPORT_BLE_ADV* && *CONFIG_BLE_MESH*

Default value:

- 3 if *CONFIG_BLE_MESH_SUPPORT_BLE_ADV* && *CONFIG_BLE_MESH*

CONFIG_BLE_MESH_SUPPORT_BLE_SCAN

Support scanning normal BLE advertising packets

Found in: Component config > CONFIG_BLE_MESH > BLE Mesh and BLE coexistence support

When selected, users can register a callback and receive normal BLE advertising packets in the application layer.

Default value:

- No (disabled) if *CONFIG_BLE_MESH*

CONFIG_BLE_MESH_FAST_PROV

Enable BLE Mesh Fast Provisioning

Found in: Component config > CONFIG_BLE_MESH

Enable this option to allow BLE Mesh fast provisioning solution to be used. When there are multiple unprovisioned devices around, fast provisioning can greatly reduce the time consumption of the whole provisioning process. When this option is enabled, and after an unprovisioned device is provisioned into a node successfully, it can be changed to a temporary Provisioner.

Default value:

- No (disabled) if *CONFIG_BLE_MESH*

CONFIG_BLE_MESH_NODE

Support for BLE Mesh Node

Found in: Component config > CONFIG_BLE_MESH

Enable the device to be provisioned into a node. This option should be enabled when an unprovisioned device is going to be provisioned into a node and communicate with other nodes in the BLE Mesh network.

CONFIG_BLE_MESH_PROVISIONER

Support for BLE Mesh Provisioner

Found in: Component config > CONFIG_BLE_MESH

Enable the device to be a Provisioner. The option should be enabled when a device is going to act as a Provisioner and provision unprovisioned devices into the BLE Mesh network.

CONFIG_BLE_MESH_WAIT_FOR_PROV_MAX_DEV_NUM

Maximum number of unprovisioned devices that can be added to device queue

Found in: Component config > CONFIG_BLE_MESH > CONFIG_BLE_MESH_PROVISIONER

This option specifies how many unprovisioned devices can be added to device queue for provisioning. Users can use this option to define the size of the queue in the bottom layer which is used to store unprovisioned device information (e.g. Device UUID, address).

Range:

- from 1 to 100 if *CONFIG_BLE_MESH_PROVISIONER* && *CONFIG_BLE_MESH*

Default value:

- 10 if *CONFIG_BLE_MESH_PROVISIONER* && *CONFIG_BLE_MESH*

CONFIG_BLE_MESH_MAX_PROV_NODES

Maximum number of devices that can be provisioned by Provisioner

Found in: Component config > CONFIG_BLE_MESH > CONFIG_BLE_MESH_PROVISIONER

This option specifies how many devices can be provisioned by a Provisioner. This value indicates the maximum number of unprovisioned devices which can be provisioned by a Provisioner. For instance, if the value is 6, it means the Provisioner can provision up to 6 unprovisioned devices. Theoretically a Provisioner without the limitation of its memory can provision up to 32766 unprovisioned devices, here we limit the maximum number to 100 just to limit the memory used by a Provisioner. The bigger the value is, the more memory it will cost by a Provisioner to store the information of nodes.

Range:

- from 1 to 1000 if *CONFIG_BLE_MESH_PROVISIONER* && *CONFIG_BLE_MESH*

Default value:

- 10 if *CONFIG_BLE_MESH_PROVISIONER* && *CONFIG_BLE_MESH*

CONFIG_BLE_MESH_PBA_SAME_TIME

Maximum number of PB-ADV running at the same time by Provisioner

Found in: Component config > CONFIG_BLE_MESH > CONFIG_BLE_MESH_PROVISIONER

This option specifies how many devices can be provisioned at the same time using PB-ADV. For examples, if the value is 2, it means a Provisioner can provision two unprovisioned devices with PB-ADV at the same time.

Range:

- from 1 to 10 if *CONFIG_BLE_MESH_PB_ADV* && *CONFIG_BLE_MESH_PROVISIONER* && *CONFIG_BLE_MESH*

Default value:

- 2 if *CONFIG_BLE_MESH_PB_ADV* && *CONFIG_BLE_MESH_PROVISIONER* && *CONFIG_BLE_MESH*

CONFIG_BLE_MESH_PBG_SAME_TIME

Maximum number of PB-GATT running at the same time by Provisioner

Found in: Component config > CONFIG_BLE_MESH > CONFIG_BLE_MESH_PROVISIONER

This option specifies how many devices can be provisioned at the same time using PB-GATT. For example, if the value is 2, it means a Provisioner can provision two unprovisioned devices with PB-GATT at the same time.

Range:

- from 1 to 5 if *CONFIG_BLE_MESH_PB_GATT* && *CONFIG_BLE_MESH_PROVISIONER* && *CONFIG_BLE_MESH*

Default value:

- 1 if *CONFIG_BLE_MESH_PB_GATT* && *CONFIG_BLE_MESH_PROVISIONER* && *CONFIG_BLE_MESH*

CONFIG_BLE_MESH_PROVISIONER_SUBNET_COUNT

Maximum number of mesh subnets that can be created by Provisioner

Found in: Component config > CONFIG_BLE_MESH > CONFIG_BLE_MESH_PROVISIONER

This option specifies how many subnets per network a Provisioner can create. Indeed, this value decides the number of network keys which can be added by a Provisioner.

Range:

- from 1 to 4096 if *CONFIG_BLE_MESH_PROVISIONER* && *CONFIG_BLE_MESH*

Default value:

- 3 if *CONFIG_BLE_MESH_PROVISIONER* && *CONFIG_BLE_MESH*

CONFIG_BLE_MESH_PROVISIONER_APP_KEY_COUNT

Maximum number of application keys that can be owned by Provisioner

Found in: Component config > CONFIG_BLE_MESH > CONFIG_BLE_MESH_PROVISIONER

This option specifies how many application keys the Provisioner can have. Indeed, this value decides the number of the application keys which can be added by a Provisioner.

Range:

- from 1 to 4096 if *CONFIG_BLE_MESH_PROVISIONER* && *CONFIG_BLE_MESH*

Default value:

- 3 if *CONFIG_BLE_MESH_PROVISIONER* && *CONFIG_BLE_MESH*

CONFIG_BLE_MESH_PROVISIONER_RECV_HB

Support receiving Heartbeat messages

Found in: Component config > CONFIG_BLE_MESH > CONFIG_BLE_MESH_PROVISIONER

When this option is enabled, Provisioner can call specific functions to enable or disable receiving Heartbeat messages and notify them to the application layer.

Default value:

- No (disabled) if *CONFIG_BLE_MESH_PROVISIONER* && *CONFIG_BLE_MESH*

CONFIG_BLE_MESH_PROVISIONER_RECV_HB_FILTER_SIZE

Maximum number of filter entries for receiving Heartbeat messages

Found in: Component config > CONFIG_BLE_MESH > CONFIG_BLE_MESH_PROVISIONER > CONFIG_BLE_MESH_PROVISIONER_RECV_HB

This option specifies how many heartbeat filter entries Provisioner supports. The heartbeat filter (acceptlist or rejectlist) entries are used to store a list of SRC and DST which can be used to decide if a heartbeat message will be processed and notified to the application layer by Provisioner. Note: The filter is an empty rejectlist by default.

Range:

- from 1 to 1000 if *CONFIG_BLE_MESH_PROVISIONER_RECV_HB* && *CONFIG_BLE_MESH_PROVISIONER* && *CONFIG_BLE_MESH*

Default value:

- 3 if *CONFIG_BLE_MESH_PROVISIONER_RECV_HB* && *CONFIG_BLE_MESH_PROVISIONER* && *CONFIG_BLE_MESH*

CONFIG_BLE_MESH_PROV

BLE Mesh Provisioning support

Found in: Component config > *CONFIG_BLE_MESH*

Enable this option to support BLE Mesh Provisioning functionality. For BLE Mesh, this option should be always enabled.

Default value:

- Yes (enabled) if *CONFIG_BLE_MESH*

CONFIG_BLE_MESH_PB_ADV

Provisioning support using the advertising bearer (PB-ADV)

Found in: Component config > *CONFIG_BLE_MESH*

Enable this option to allow the device to be provisioned over the advertising bearer. This option should be enabled if PB-ADV is going to be used during provisioning procedure.

Default value:

- Yes (enabled) if *CONFIG_BLE_MESH*

CONFIG_BLE_MESH_UNPROVISIONED_BEACON_INTERVAL

Interval between two consecutive Unprovisioned Device Beacon

Found in: Component config > *CONFIG_BLE_MESH* > *CONFIG_BLE_MESH_PB_ADV*

This option specifies the interval of sending two consecutive unprovisioned device beacon, users can use this option to change the frequency of sending unprovisioned device beacon. For example, if the value is 5, it means the unprovisioned device beacon will send every 5 seconds. When the option of BLE_MESH_FAST_PROV is selected, the value is better to be 3 seconds, or less.

Range:

- from 1 to 100 if *CONFIG_BLE_MESH_NODE* && *CONFIG_BLE_MESH_PB_ADV* && *CONFIG_BLE_MESH*

Default value:

- 5 if *CONFIG_BLE_MESH_NODE* && *CONFIG_BLE_MESH_PB_ADV* && *CONFIG_BLE_MESH*
- 3 if *CONFIG_BLE_MESH_FAST_PROV* && *CONFIG_BLE_MESH_NODE* && *CONFIG_BLE_MESH_PB_ADV* && *CONFIG_BLE_MESH*

CONFIG_BLE_MESH_PB_GATT

Provisioning support using GATT (PB-GATT)

Found in: Component config > *CONFIG_BLE_MESH*

Enable this option to allow the device to be provisioned over GATT. This option should be enabled if PB-GATT is going to be used during provisioning procedure.

Virtual option enabled whenever any Proxy protocol is needed

CONFIG_BLE_MESH_PROXY

BLE Mesh Proxy protocol support

Found in: Component config > CONFIG_BLE_MESH

Enable this option to support BLE Mesh Proxy protocol used by PB-GATT and other proxy pdu transmission.

Default value:

- Yes (enabled) if *CONFIG_BLE_MESH*

CONFIG_BLE_MESH_GATT_PROXY_SERVER

BLE Mesh GATT Proxy Server

Found in: Component config > CONFIG_BLE_MESH

This option enables support for Mesh GATT Proxy Service, i.e. the ability to act as a proxy between a Mesh GATT Client and a Mesh network. This option should be enabled if a node is going to be a Proxy Server.

Default value:

- Yes (enabled) if *CONFIG_BLE_MESH_NODE* && *CONFIG_BLE_MESH*

CONFIG_BLE_MESH_NODE_ID_TIMEOUT

Node Identity advertising timeout

Found in: Component config > CONFIG_BLE_MESH > CONFIG_BLE_MESH_GATT_PROXY_SERVER

This option determines for how long the local node advertises using Node Identity. The given value is in seconds. The specification limits this to 60 seconds and lists it as the recommended value as well. So leaving the default value is the safest option. When an unprovisioned device is provisioned successfully and becomes a node, it will start to advertise using Node Identity during the time set by this option. And after that, Network ID will be advertised.

Range:

- from 1 to 60 if *CONFIG_BLE_MESH_GATT_PROXY_SERVER* && *CONFIG_BLE_MESH*

Default value:

- 60 if *CONFIG_BLE_MESH_GATT_PROXY_SERVER* && *CONFIG_BLE_MESH*

CONFIG_BLE_MESH_PROXY_FILTER_SIZE

Maximum number of filter entries per Proxy Client

Found in: Component config > CONFIG_BLE_MESH > CONFIG_BLE_MESH_GATT_PROXY_SERVER

This option specifies how many Proxy Filter entries the local node supports. The entries of Proxy filter (whitelist or blacklist) are used to store a list of addresses which can be used to decide which messages will be forwarded to the Proxy Client by the Proxy Server.

Range:

- from 1 to 32767 if *CONFIG_BLE_MESH_GATT_PROXY_SERVER* && *CONFIG_BLE_MESH*

Default value:

- 4 if *CONFIG_BLE_MESH_GATT_PROXY_SERVER* && *CONFIG_BLE_MESH*

CONFIG_BLE_MESH_GATT_PROXY_CLIENT

BLE Mesh GATT Proxy Client

Found in: Component config > CONFIG_BLE_MESH

This option enables support for Mesh GATT Proxy Client. The Proxy Client can use the GATT bearer to send mesh messages to a node that supports the advertising bearer.

Default value:

- No (disabled) if *CONFIG_BLE_MESH*

CONFIG_BLE_MESH_SETTINGS

Store BLE Mesh configuration persistently

Found in: Component config > CONFIG_BLE_MESH

When selected, the BLE Mesh stack will take care of storing/restoring the BLE Mesh configuration persistently in flash. If the device is a BLE Mesh node, when this option is enabled, the configuration of the device will be stored persistently, including unicast address, NetKey, AppKey, etc. And if the device is a BLE Mesh Provisioner, the information of the device will be stored persistently, including the information of provisioned nodes, NetKey, AppKey, etc.

Default value:

- No (disabled) if *CONFIG_BLE_MESH*

CONFIG_BLE_MESH_STORE_TIMEOUT

Delay (in seconds) before storing anything persistently

Found in: Component config > CONFIG_BLE_MESH > CONFIG_BLE_MESH_SETTINGS

This value defines in seconds how soon any pending changes are actually written into persistent storage (flash) after a change occurs. The option allows nodes to delay a certain period of time to save proper information to flash. The default value is 0, which means information will be stored immediately once there are updates.

Range:

- from 0 to 1000000 if *CONFIG_BLE_MESH_SETTINGS* && *CONFIG_BLE_MESH*

Default value:

- 0 if *CONFIG_BLE_MESH_SETTINGS* && *CONFIG_BLE_MESH*

CONFIG_BLE_MESH_SEQ_STORE_RATE

How often the sequence number gets updated in storage

Found in: Component config > CONFIG_BLE_MESH > CONFIG_BLE_MESH_SETTINGS

This value defines how often the local sequence number gets updated in persistent storage (i.e. flash). e.g. a value of 100 means that the sequence number will be stored to flash on every 100th increment. If the node sends messages very frequently a higher value makes more sense, whereas if the node sends infrequently a value as low as 0 (update storage for every increment) can make sense. When the stack gets initialized it will add sequence number to the last stored one, so that it starts off with a value that's guaranteed to be larger than the last one used before power off.

Range:

- from 0 to 1000000 if *CONFIG_BLE_MESH_SETTINGS* && *CONFIG_BLE_MESH*

Default value:

- 0 if *CONFIG_BLE_MESH_SETTINGS* && *CONFIG_BLE_MESH*

CONFIG_BLE_MESH_RPL_STORE_TIMEOUT

Minimum frequency that the RPL gets updated in storage

Found in: Component config > CONFIG_BLE_MESH > CONFIG_BLE_MESH_SETTINGS

This value defines in seconds how soon the RPL (Replay Protection List) gets written to persistent storage after a change occurs. If the node receives messages frequently, then a large value is recommended. If the node receives messages rarely, then the value can be as low as 0 (which means the RPL is written into the storage immediately). Note that if the node operates in a security-sensitive case, and there is a risk of sudden power-off, then a value of 0 is strongly recommended. Otherwise, a power loss before RPL being written into the storage may introduce message replay attacks and system security will be in a vulnerable state.

Range:

- from 0 to 1000000 if *CONFIG_BLE_MESH_SETTINGS* && *CONFIG_BLE_MESH*

Default value:

- 0 if *CONFIG_BLE_MESH_SETTINGS* && *CONFIG_BLE_MESH*

CONFIG_BLE_MESH_SETTINGS_BACKWARD_COMPATIBILITY

A specific option for settings backward compatibility

Found in: Component config > CONFIG_BLE_MESH > CONFIG_BLE_MESH_SETTINGS

This option is created to solve the issue of failure in recovering node information after mesh stack updates. In the old version mesh stack, there is no key of "mesh/role" in nvs. In the new version mesh stack, key of "mesh/role" is added in nvs, recovering node information needs to check "mesh/role" key in nvs and implements selective recovery of mesh node information. Therefore, there may be failure in recovering node information during node restarting after OTA.

The new version mesh stack adds the option of "mesh/role" because we have added the support of storing Provisioner information, while the old version only supports storing node information.

If users are updating their nodes from old version to new version, we recommend enabling this option, so that system could set the flag in advance before recovering node information and make sure the node information recovering could work as expected.

Default value:

- No (disabled) if *CONFIG_BLE_MESH_NODE* && *CONFIG_BLE_MESH_SETTINGS* && *CONFIG_BLE_MESH*

CONFIG_BLE_MESH_SPECIFIC_PARTITION

Use a specific NVS partition for BLE Mesh

Found in: Component config > CONFIG_BLE_MESH > CONFIG_BLE_MESH_SETTINGS

When selected, the mesh stack will use a specified NVS partition instead of default NVS partition. Note that the specified partition must be registered with NVS using nvs_flash_init_partition() API, and the partition must exists in the csv file. When Provisioner needs to store a large amount of nodes ' information in the flash (e.g. more than 20), this option is recommended to be enabled.

Default value:

- No (disabled) if *CONFIG_BLE_MESH_SETTINGS* && *CONFIG_BLE_MESH*

CONFIG_BLE_MESH_PARTITION_NAME

Name of the NVS partition for BLE Mesh

Found in: Component config > CONFIG_BLE_MESH > CONFIG_BLE_MESH_SETTINGS > CONFIG_BLE_MESH_SPECIFIC_PARTITION

This value defines the name of the specified NVS partition used by the mesh stack.

Default value:

- “ble_mesh” if *CONFIG_BLE_MESH_SPECIFIC_PARTITION* && *CONFIG_BLE_MESH_SETTINGS* && *CONFIG_BLE_MESH*

CONFIG_BLE_MESH_USE_MULTIPLE_NAMESPACE

Support using multiple NVS namespaces by Provisioner

Found in: Component config > *CONFIG_BLE_MESH* > *CONFIG_BLE_MESH_SETTINGS*

When selected, Provisioner can use different NVS namespaces to store different instances of mesh information. For example, if in the first room, Provisioner uses NetKey A, AppKey A and provisions three devices, these information will be treated as mesh information instance A. When the Provisioner moves to the second room, it uses NetKey B, AppKey B and provisions two devices, then the information will be treated as mesh information instance B. Here instance A and instance B will be stored in different namespaces. With this option enabled, Provisioner needs to use specific functions to open the corresponding NVS namespace, restore the mesh information, release the mesh information or erase the mesh information.

Default value:

- No (disabled) if *CONFIG_BLE_MESH_PROVISIONER* && *CONFIG_BLE_MESH_SETTINGS* && *CONFIG_BLE_MESH*

CONFIG_BLE_MESH_MAX_NVS_NAMESPACE

Maximum number of NVS namespaces

Found in: Component config > *CONFIG_BLE_MESH* > *CONFIG_BLE_MESH_SETTINGS* > *CONFIG_BLE_MESH_USE_MULTIPLE_NAMESPACE*

This option specifies the maximum NVS namespaces supported by Provisioner.

Range:

- from 1 to 255 if *CONFIG_BLE_MESH_USE_MULTIPLE_NAMESPACE* && *CONFIG_BLE_MESH_SETTINGS* && *CONFIG_BLE_MESH*

Default value:

- 2 if *CONFIG_BLE_MESH_USE_MULTIPLE_NAMESPACE* && *CONFIG_BLE_MESH_SETTINGS* && *CONFIG_BLE_MESH*

CONFIG_BLE_MESH_SUBNET_COUNT

Maximum number of mesh subnets per network

Found in: Component config > *CONFIG_BLE_MESH*

This option specifies how many subnets a Mesh network can have at the same time. Indeed, this value decides the number of the network keys which can be owned by a node.

Range:

- from 1 to 4096 if *CONFIG_BLE_MESH*

Default value:

- 3 if *CONFIG_BLE_MESH*

CONFIG_BLE_MESH_APP_KEY_COUNT

Maximum number of application keys per network

Found in: Component config > *CONFIG_BLE_MESH*

This option specifies how many application keys the device can store per network. Indeed, this value decides the number of the application keys which can be owned by a node.

Range:

- from 1 to 4096 if *CONFIG_BLE_MESH*

Default value:

- 3 if *CONFIG_BLE_MESH*

CONFIG_BLE_MESH_MODEL_KEY_COUNT

Maximum number of application keys per model

Found in: Component config > CONFIG_BLE_MESH

This option specifies the maximum number of application keys to which each model can be bound.

Range:

- from 1 to 4096 if *CONFIG_BLE_MESH*

Default value:

- 3 if *CONFIG_BLE_MESH*

CONFIG_BLE_MESH_MODEL_GROUP_COUNT

Maximum number of group address subscriptions per model

Found in: Component config > CONFIG_BLE_MESH

This option specifies the maximum number of addresses to which each model can be subscribed.

Range:

- from 1 to 4096 if *CONFIG_BLE_MESH*

Default value:

- 3 if *CONFIG_BLE_MESH*

CONFIG_BLE_MESH_LABEL_COUNT

Maximum number of Label UUIDs used for Virtual Addresses

Found in: Component config > CONFIG_BLE_MESH

This option specifies how many Label UUIDs can be stored. Indeed, this value decides the number of the Virtual Addresses can be supported by a node.

Range:

- from 0 to 4096 if *CONFIG_BLE_MESH*

Default value:

- 3 if *CONFIG_BLE_MESH*

CONFIG_BLE_MESH_CRPL

Maximum capacity of the replay protection list

Found in: Component config > CONFIG_BLE_MESH

This option specifies the maximum capacity of the replay protection list. It is similar to Network message cache size, but has a different purpose. The replay protection list is used to prevent a node from replay attack, which will store the source address and sequence number of the received mesh messages. For Provisioner, the replay protection list size should not be smaller than the maximum number of nodes whose information can be stored. And the element number of each node should also be taken into consideration. For example, if Provisioner can provision up to 20 nodes and each node contains two elements, then the replay protection list size of Provisioner should be at least 40.

Range:

- from 2 to 65535 if *CONFIG_BLE_MESH*

Default value:

- 10 if *CONFIG_BLE_MESH*

CONFIG_BLE_MESH_MSG_CACHE_SIZE

Network message cache size

Found in: Component config > CONFIG_BLE_MESH

Number of messages that are cached for the network. This helps prevent unnecessary decryption operations and unnecessary relays. This option is similar to Replay protection list, but has a different purpose. A node is not required to cache the entire Network PDU and may cache only part of it for tracking, such as values for SRC/SEQ or others.

Range:
- from 2 to 65535 if *CONFIG_BLE_MESH*

Default value:
- 10 if *CONFIG_BLE_MESH*

CONFIG_BLE_MESH_ADV_BUF_COUNT

Number of advertising buffers

Found in: Component config > CONFIG_BLE_MESH

Number of advertising buffers available. The transport layer reserves ADV_BUF_COUNT - 3 buffers for outgoing segments. The maximum outgoing SDU size is 12 times this value (out of which 4 or 8 bytes are used for the Transport Layer MIC). For example, 5 segments means the maximum SDU size is 60 bytes, which leaves 56 bytes for application layer data using a 4-byte MIC, or 52 bytes using an 8-byte MIC.

Range:
- from 6 to 256 if *CONFIG_BLE_MESH*

Default value:
- 60 if *CONFIG_BLE_MESH*

CONFIG_BLE_MESH_IVU_DIVIDER

Divider for IV Update state refresh timer

Found in: Component config > CONFIG_BLE_MESH

When the IV Update state enters Normal operation or IV Update in Progress, we need to keep track of how many hours has passed in the state, since the specification requires us to remain in the state at least for 96 hours (Update in Progress has an additional upper limit of 144 hours).

In order to fulfill the above requirement, even if the node might be powered off once in a while, we need to store persistently how many hours the node has been in the state. This doesn't necessarily need to happen every hour (thanks to the flexible duration range). The exact cadence will depend a lot on the ways that the node will be used and what kind of power source it has.

Since there is no single optimal answer, this configuration option allows specifying a divider, i.e. how many intervals the 96 hour minimum gets split into. After each interval the duration that the node has been in the current state gets stored to flash. E.g. the default value of 4 means that the state is saved every 24 hours (96 / 4).

Range:
- from 2 to 96 if *CONFIG_BLE_MESH*

Default value:
- 4 if *CONFIG_BLE_MESH*

CONFIG_BLE_MESH_IVU_RECOVERY_IVI

Recovery the IV index when the latest whole IV update procedure is missed

Found in: Component config > CONFIG_BLE_MESH

According to Section 3.10.5 of Mesh Specification v1.0.1. If a node in Normal Operation receives a Secure Network beacon with an IV index equal to the last known IV index+1 and the IV Update Flag set to 0, the node may update its IV without going to the IV Update in Progress state, or it may initiate an IV Index Recovery procedure (Section 3.10.6), or it may ignore the Secure Network beacon. The node makes the choice depending on the time since last IV update and the likelihood that the node has missed the Secure Network beacons with the IV update Flag. When the above situation is encountered, this option can be used to decide whether to perform the IV index recovery procedure.

Default value:

- No (disabled) if *CONFIG_BLE_MESH*

CONFIG_BLE_MESH_TX_SEG_MSG_COUNT

Maximum number of simultaneous outgoing segmented messages

Found in: Component config > CONFIG_BLE_MESH

Maximum number of simultaneous outgoing multi-segment and/or reliable messages. The default value is 1, which means the device can only send one segmented message at a time. And if another segmented message is going to be sent, it should wait for the completion of the previous one. If users are going to send multiple segmented messages at the same time, this value should be configured properly.

Range:

- from 1 to if *CONFIG_BLE_MESH*

Default value:

- 1 if *CONFIG_BLE_MESH*

CONFIG_BLE_MESH_RX_SEG_MSG_COUNT

Maximum number of simultaneous incoming segmented messages

Found in: Component config > CONFIG_BLE_MESH

Maximum number of simultaneous incoming multi-segment and/or reliable messages. The default value is 1, which means the device can only receive one segmented message at a time. And if another segmented message is going to be received, it should wait for the completion of the previous one. If users are going to receive multiple segmented messages at the same time, this value should be configured properly.

Range:

- from 1 to 255 if *CONFIG_BLE_MESH*

Default value:

- 1 if *CONFIG_BLE_MESH*

CONFIG_BLE_MESH_RX_SDU_MAX

Maximum incoming Upper Transport Access PDU length

Found in: Component config > CONFIG_BLE_MESH

Maximum incoming Upper Transport Access PDU length. Leave this to the default value, unless you really need to optimize memory usage.

Range:

- from 36 to 384 if *CONFIG_BLE_MESH*

Default value:

- 384 if *CONFIG_BLE_MESH*

CONFIG_BLE_MESH_TX_SEG_MAX

Maximum number of segments in outgoing messages

Found in: Component config > CONFIG_BLE_MESH

Maximum number of segments supported for outgoing messages. This value should typically be fine-tuned based on what models the local node supports, i.e. what's the largest message payload that the node needs to be able to send. This value affects memory and call stack consumption, which is why the default is lower than the maximum that the specification would allow (32 segments).

The maximum outgoing SDU size is 12 times this number (out of which 4 or 8 bytes is used for the Transport Layer MIC). For example, 5 segments means the maximum SDU size is 60 bytes, which leaves 56 bytes for application layer data using a 4-byte MIC and 52 bytes using an 8-byte MIC.

Be sure to specify a sufficient number of advertising buffers when setting this option to a higher value. There must be at least three more advertising buffers (BLE_MESH_ADV_BUF_COUNT) as there are outgoing segments.

Range:

- from 2 to 32 if *CONFIG_BLE_MESH*

Default value:

- 32 if *CONFIG_BLE_MESH*

CONFIG_BLE_MESH_RELAY

Relay support

Found in: Component config > CONFIG_BLE_MESH

Support for acting as a Mesh Relay Node. Enabling this option will allow a node to support the Relay feature, and the Relay feature can still be enabled or disabled by proper configuration messages. Disabling this option will let a node not support the Relay feature.

Default value:

- Yes (enabled) if *CONFIG_BLE_MESH_NODE* && *CONFIG_BLE_MESH*

CONFIG_BLE_MESH_RELAY_ADV_BUF

Use separate advertising buffers for relay packets

Found in: Component config > CONFIG_BLE_MESH > CONFIG_BLE_MESH_RELAY

When selected, self-send packets will be put in a high-priority queue and relay packets will be put in a low-priority queue.

Default value:

- No (disabled) if *CONFIG_BLE_MESH_RELAY* && *CONFIG_BLE_MESH*

CONFIG_BLE_MESH_RELAY_ADV_BUF_COUNT

Number of advertising buffers for relay packets

Found in: Component config > CONFIG_BLE_MESH > CONFIG_BLE_MESH_RELAY > CONFIG_BLE_MESH_RELAY_ADV_BUF

Number of advertising buffers for relay packets available.

Range:

- from 6 to 256 if *CONFIG_BLE_MESH_RELAY_ADV_BUF* && *CONFIG_BLE_MESH_RELAY* && *CONFIG_BLE_MESH*

Default value:

- 60 if *CONFIG_BLE_MESH_RELAY_ADV_BUF* && *CONFIG_BLE_MESH_RELAY* && *CONFIG_BLE_MESH*

CONFIG_BLE_MESH_LOW_POWER

Support for Low Power features

Found in: Component config > CONFIG_BLE_MESH

Enable this option to operate as a Low Power Node. If low power consumption is required by a node, this option should be enabled. And once the node enters the mesh network, it will try to find a Friend node and establish a friendship.

CONFIG_BLE_MESH_LPN_ESTABLISHMENT

Perform Friendship establishment using low power

Found in: Component config > CONFIG_BLE_MESH > CONFIG_BLE_MESH_LOW_POWER

Perform the Friendship establishment using low power with the help of a reduced scan duty cycle. The downside of this is that the node may miss out on messages intended for it until it has successfully set up Friendship with a Friend node. When this option is enabled, the node will stop scanning for a period of time after a Friend Request or Friend Poll is sent, so as to reduce more power consumption.

Default value:

- No (disabled) if *CONFIG_BLE_MESH_LOW_POWER* && *CONFIG_BLE_MESH*

CONFIG_BLE_MESH_LPN_AUTO

Automatically start looking for Friend nodes once provisioned

Found in: Component config > CONFIG_BLE_MESH > CONFIG_BLE_MESH_LOW_POWER

Once provisioned, automatically enable LPN functionality and start looking for Friend nodes. If this option is disabled LPN mode needs to be manually enabled by calling bt_mesh_lpn_set(true). When an unprovisioned device is provisioned successfully and becomes a node, enabling this option will trigger the node starts to send Friend Request at a certain period until it finds a proper Friend node.

Default value:

- No (disabled) if *CONFIG_BLE_MESH_LOW_POWER* && *CONFIG_BLE_MESH*

CONFIG_BLE_MESH_LPN_AUTO_TIMEOUT

Time from last received message before going to LPN mode

Found in: Component config > CONFIG_BLE_MESH > CONFIG_BLE_MESH_LOW_POWER > CONFIG_BLE_MESH_LPN_AUTO

Time in seconds from the last received message, that the node waits out before starting to look for Friend nodes.

Range:

- from 0 to 3600 if *CONFIG_BLE_MESH_LPN_AUTO* && *CONFIG_BLE_MESH_LOW_POWER* && *CONFIG_BLE_MESH*

Default value:

- 15 if *CONFIG_BLE_MESH_LPN_AUTO* && *CONFIG_BLE_MESH_LOW_POWER* && *CONFIG_BLE_MESH*

CONFIG_BLE_MESH_LPN_RETRY_TIMEOUT

Retry timeout for Friend requests

Found in: Component config > CONFIG_BLE_MESH > CONFIG_BLE_MESH_LOW_POWER

Time in seconds between Friend Requests, if a previous Friend Request did not yield any acceptable Friend Offers.

Range:

- from 1 to 3600 if *CONFIG_BLE_MESH_LOW_POWER* && *CONFIG_BLE_MESH*

Default value:

- 6 if *CONFIG_BLE_MESH_LOW_POWER* && *CONFIG_BLE_MESH*

CONFIG_BLE_MESH_LPN_RSSI_FACTOR

RSSIFactor, used in Friend Offer Delay calculation

Found in: Component config > *CONFIG_BLE_MESH* > *CONFIG_BLE_MESH_LOW_POWER*

The contribution of the RSSI, measured by the Friend node, used in Friend Offer Delay calculations. 0 = 1, 1 = 1.5, 2 = 2, 3 = 2.5. RSSIFactor, one of the parameters carried by Friend Request sent by Low Power node, which is used to calculate the Friend Offer Delay.

Range:

- from 0 to 3 if *CONFIG_BLE_MESH_LOW_POWER* && *CONFIG_BLE_MESH*

Default value:

- 0 if *CONFIG_BLE_MESH_LOW_POWER* && *CONFIG_BLE_MESH*

CONFIG_BLE_MESH_LPN_RECV_WIN_FACTOR

ReceiveWindowFactor, used in Friend Offer Delay calculation

Found in: Component config > *CONFIG_BLE_MESH* > *CONFIG_BLE_MESH_LOW_POWER*

The contribution of the supported Receive Window used in Friend Offer Delay calculations. 0 = 1, 1 = 1.5, 2 = 2, 3 = 2.5. ReceiveWindowFactor, one of the parameters carried by Friend Request sent by Low Power node, which is used to calculate the Friend Offer Delay.

Range:

- from 0 to 3 if *CONFIG_BLE_MESH_LOW_POWER* && *CONFIG_BLE_MESH*

Default value:

- 0 if *CONFIG_BLE_MESH_LOW_POWER* && *CONFIG_BLE_MESH*

CONFIG_BLE_MESH_LPN_MIN_QUEUE_SIZE

Minimum size of the acceptable friend queue (MinQueueSizeLog)

Found in: Component config > *CONFIG_BLE_MESH* > *CONFIG_BLE_MESH_LOW_POWER*

The MinQueueSizeLog field is defined as log_2(N), where N is the minimum number of maximum size Lower Transport PDUs that the Friend node can store in its Friend Queue. As an example, MinQueueSizeLog value 1 gives N = 2, and value 7 gives N = 128.

Range:

- from 1 to 7 if *CONFIG_BLE_MESH_LOW_POWER* && *CONFIG_BLE_MESH*

Default value:

- 1 if *CONFIG_BLE_MESH_LOW_POWER* && *CONFIG_BLE_MESH*

CONFIG_BLE_MESH_LPN_RECV_DELAY

Receive delay requested by the local node

Found in: Component config > *CONFIG_BLE_MESH* > *CONFIG_BLE_MESH_LOW_POWER*

The ReceiveDelay is the time between the Low Power node sending a request and listening for a response. This delay allows the Friend node time to prepare the response. The value is in units of milliseconds.

Range:

- from 10 to 255 if *CONFIG_BLE_MESH_LOW_POWER* && *CONFIG_BLE_MESH*

Default value:

- 100 if *CONFIG_BLE_MESH_LOW_POWER* && *CONFIG_BLE_MESH*

CONFIG_BLE_MESH_LPN_POLL_TIMEOUT

The value of the PollTimeout timer

Found in: Component config > CONFIG_BLE_MESH > CONFIG_BLE_MESH_LOW_POWER

PollTimeout timer is used to measure time between two consecutive requests sent by a Low Power node. If no requests are received the Friend node before the PollTimeout timer expires, then the friendship is considered terminated. The value is in units of 100 milliseconds, so e.g. a value of 300 means 30 seconds. The smaller the value, the faster the Low Power node tries to get messages from corresponding Friend node and vice versa.

Range:
- from 10 to 244735 if *CONFIG_BLE_MESH_LOW_POWER* && *CONFIG_BLE_MESH*

Default value:
- 300 if *CONFIG_BLE_MESH_LOW_POWER* && *CONFIG_BLE_MESH*

CONFIG_BLE_MESH_LPN_INIT_POLL_TIMEOUT

The starting value of the PollTimeout timer

Found in: Component config > CONFIG_BLE_MESH > CONFIG_BLE_MESH_LOW_POWER

The initial value of the PollTimeout timer when Friendship is to be established for the first time. After this, the timeout gradually grows toward the actual PollTimeout, doubling in value for each iteration. The value is in units of 100 milliseconds, so e.g. a value of 300 means 30 seconds.

Range:
- from 10 to if *CONFIG_BLE_MESH_LOW_POWER* && *CONFIG_BLE_MESH*

Default value:
- if *CONFIG_BLE_MESH_LOW_POWER* && *CONFIG_BLE_MESH*

CONFIG_BLE_MESH_LPN_SCAN_LATENCY

Latency for enabling scanning

Found in: Component config > CONFIG_BLE_MESH > CONFIG_BLE_MESH_LOW_POWER

Latency (in milliseconds) is the time it takes to enable scanning. In practice, it means how much time in advance of the Receive Window, the request to enable scanning is made.

Range:
- from 0 to 50 if *CONFIG_BLE_MESH_LOW_POWER* && *CONFIG_BLE_MESH*

Default value:
- 10 if *CONFIG_BLE_MESH_LOW_POWER* && *CONFIG_BLE_MESH*

CONFIG_BLE_MESH_LPN_GROUPS

Number of groups the LPN can subscribe to

Found in: Component config > CONFIG_BLE_MESH > CONFIG_BLE_MESH_LOW_POWER

Maximum number of groups to which the LPN can subscribe.

Range:
- from 0 to 16384 if *CONFIG_BLE_MESH_LOW_POWER* && *CONFIG_BLE_MESH*

Default value:
- 8 if *CONFIG_BLE_MESH_LOW_POWER* && *CONFIG_BLE_MESH*

CONFIG_BLE_MESH_LPN_SUB_ALL_NODES_ADDR

Automatically subscribe all nodes address

Found in: Component config > CONFIG_BLE_MESH > CONFIG_BLE_MESH_LOW_POWER

Automatically subscribe all nodes address when friendship established.

Default value:

- No (disabled) if *CONFIG_BLE_MESH_LOW_POWER* && *CONFIG_BLE_MESH*

CONFIG_BLE_MESH_FRIEND

Support for Friend feature

Found in: Component config > CONFIG_BLE_MESH

Enable this option to be able to act as a Friend Node.

CONFIG_BLE_MESH_FRIEND_RECV_WIN

Friend Receive Window

Found in: Component config > CONFIG_BLE_MESH > CONFIG_BLE_MESH_FRIEND

Receive Window in milliseconds supported by the Friend node.

Range:

- from 1 to 255 if *CONFIG_BLE_MESH_FRIEND* && *CONFIG_BLE_MESH*

Default value:

- 255 if *CONFIG_BLE_MESH_FRIEND* && *CONFIG_BLE_MESH*

CONFIG_BLE_MESH_FRIEND_QUEUE_SIZE

Minimum number of buffers supported per Friend Queue

Found in: Component config > CONFIG_BLE_MESH > CONFIG_BLE_MESH_FRIEND

Minimum number of buffers available to be stored for each local Friend Queue. This option decides the size of each buffer which can be used by a Friend node to store messages for each Low Power node.

Range:

- from 2 to 65536 if *CONFIG_BLE_MESH_FRIEND* && *CONFIG_BLE_MESH*

Default value:

- 16 if *CONFIG_BLE_MESH_FRIEND* && *CONFIG_BLE_MESH*

CONFIG_BLE_MESH_FRIEND_SUB_LIST_SIZE

Friend Subscription List Size

Found in: Component config > CONFIG_BLE_MESH > CONFIG_BLE_MESH_FRIEND

Size of the Subscription List that can be supported by a Friend node for a Low Power node. And Low Power node can send Friend Subscription List Add or Friend Subscription List Remove messages to the Friend node to add or remove subscription addresses.

Range:

- from 0 to 1023 if *CONFIG_BLE_MESH_FRIEND* && *CONFIG_BLE_MESH*

Default value:

- 3 if *CONFIG_BLE_MESH_FRIEND* && *CONFIG_BLE_MESH*

CONFIG_BLE_MESH_FRIEND_LPN_COUNT

Number of supported LPN nodes

Found in: Component config > CONFIG_BLE_MESH > CONFIG_BLE_MESH_FRIEND

Number of Low Power Nodes with which a Friend can have Friendship simultaneously. A Friend node can have friendship with multiple Low Power nodes at the same time, while a Low Power node can only establish friendship with only one Friend node at the same time.

Range:
- from 1 to 1000 if *CONFIG_BLE_MESH_FRIEND* && *CONFIG_BLE_MESH*

Default value:
- 2 if *CONFIG_BLE_MESH_FRIEND* && *CONFIG_BLE_MESH*

CONFIG_BLE_MESH_FRIEND_SEG_RX

Number of incomplete segment lists per LPN

Found in: Component config > CONFIG_BLE_MESH > CONFIG_BLE_MESH_FRIEND

Number of incomplete segment lists tracked for each Friends' LPN. In other words, this determines from how many elements can segmented messages destined for the Friend queue be received simultaneously.

Range:
- from 1 to 1000 if *CONFIG_BLE_MESH_FRIEND* && *CONFIG_BLE_MESH*

Default value:
- 1 if *CONFIG_BLE_MESH_FRIEND* && *CONFIG_BLE_MESH*

CONFIG_BLE_MESH_NO_LOG

Disable BLE Mesh debug logs (minimize bin size)

Found in: Component config > CONFIG_BLE_MESH

Select this to save the BLE Mesh related rodata code size. Enabling this option will disable the output of BLE Mesh debug log.

Default value:
- No (disabled) if *CONFIG_BLE_MESH* && *CONFIG_BLE_MESH*

BLE Mesh STACK DEBUG LOG LEVEL Contains:

- *CONFIG_BLE_MESH_STACK_TRACE_LEVEL*

CONFIG_BLE_MESH_STACK_TRACE_LEVEL

BLE_MESH_STACK

Found in: Component config > CONFIG_BLE_MESH > BLE Mesh STACK DEBUG LOG LEVEL

Define BLE Mesh trace level for BLE Mesh stack.

Available options:
- NONE (BLE_MESH_TRACE_LEVEL_NONE)
- ERROR (BLE_MESH_TRACE_LEVEL_ERROR)
- WARNING (BLE_MESH_TRACE_LEVEL_WARNING)
- INFO (BLE_MESH_TRACE_LEVEL_INFO)
- DEBUG (BLE_MESH_TRACE_LEVEL_DEBUG)
- VERBOSE (BLE_MESH_TRACE_LEVEL_VERBOSE)

BLE Mesh NET BUF DEBUG LOG LEVEL Contains:

- *CONFIG_BLE_MESH_NET_BUF_TRACE_LEVEL*

CONFIG_BLE_MESH_NET_BUF_TRACE_LEVEL

BLE_MESH_NET_BUF

Found in: Component config > CONFIG_BLE_MESH > BLE Mesh NET BUF DEBUG LOG LEVEL

Define BLE Mesh trace level for BLE Mesh net buffer.

Available options:

- NONE (BLE_MESH_NET_BUF_TRACE_LEVEL_NONE)
- ERROR (BLE_MESH_NET_BUF_TRACE_LEVEL_ERROR)
- WARNING (BLE_MESH_NET_BUF_TRACE_LEVEL_WARNING)
- INFO (BLE_MESH_NET_BUF_TRACE_LEVEL_INFO)
- DEBUG (BLE_MESH_NET_BUF_TRACE_LEVEL_DEBUG)
- VERBOSE (BLE_MESH_NET_BUF_TRACE_LEVEL_VERBOSE)

CONFIG_BLE_MESH_CLIENT_MSG_TIMEOUT

Timeout(ms) for client message response

Found in: Component config > CONFIG_BLE_MESH

Timeout value used by the node to get response of the acknowledged message which is sent by the client model. This value indicates the maximum time that a client model waits for the response of the sent acknowledged messages. If a client model uses 0 as the timeout value when sending acknowledged messages, then the default value will be used which is four seconds.

Range:

- from 100 to 1200000 if *CONFIG_BLE_MESH*

Default value:

- 4000 if *CONFIG_BLE_MESH*

Support for BLE Mesh Foundation models

Contains:

- *CONFIG_BLE_MESH_CFG_CLI*
- *CONFIG_BLE_MESH_HEALTH_CLI*
- *CONFIG_BLE_MESH_HEALTH_SRV*

CONFIG_BLE_MESH_CFG_CLI

Configuration Client model

Found in: Component config > CONFIG_BLE_MESH > Support for BLE Mesh Foundation models

Enable support for Configuration Client model.

CONFIG_BLE_MESH_HEALTH_CLI

Health Client model

Found in: Component config > CONFIG_BLE_MESH > Support for BLE Mesh Foundation models

Enable support for Health Client model.

CONFIG_BLE_MESH_HEALTH_SRV

Health Server model

Found in: Component config > CONFIG_BLE_MESH > Support for BLE Mesh Foundation models

Enable support for Health Server model.

Default value:

- Yes (enabled) if *CONFIG_BLE_MESH*

Support for BLE Mesh Client/Server models Contains:

- *CONFIG_BLE_MESH_GENERIC_BATTERY_CLI*
- *CONFIG_BLE_MESH_GENERIC_DEF_TRANS_TIME_CLI*
- *CONFIG_BLE_MESH_GENERIC_LEVEL_CLI*
- *CONFIG_BLE_MESH_GENERIC_LOCATION_CLI*
- *CONFIG_BLE_MESH_GENERIC_ONOFF_CLI*
- *CONFIG_BLE_MESH_GENERIC_POWER_LEVEL_CLI*
- *CONFIG_BLE_MESH_GENERIC_POWER_ONOFF_CLI*
- *CONFIG_BLE_MESH_GENERIC_PROPERTY_CLI*
- *CONFIG_BLE_MESH_GENERIC_SERVER*
- *CONFIG_BLE_MESH_LIGHT_CTL_CLI*
- *CONFIG_BLE_MESH_LIGHT_HSL_CLI*
- *CONFIG_BLE_MESH_LIGHT_LC_CLI*
- *CONFIG_BLE_MESH_LIGHT_LIGHTNESS_CLI*
- *CONFIG_BLE_MESH_LIGHT_XYL_CLI*
- *CONFIG_BLE_MESH_LIGHTING_SERVER*
- *CONFIG_BLE_MESH_SCENE_CLI*
- *CONFIG_BLE_MESH_SCHEDULER_CLI*
- *CONFIG_BLE_MESH_SENSOR_CLI*
- *CONFIG_BLE_MESH_SENSOR_SERVER*
- *CONFIG_BLE_MESH_TIME_SCENE_SERVER*
- *CONFIG_BLE_MESH_TIME_CLI*

CONFIG_BLE_MESH_GENERIC_ONOFF_CLI

Generic OnOff Client model

Found in: Component config > CONFIG_BLE_MESH > Support for BLE Mesh Client/Server models

Enable support for Generic OnOff Client model.

CONFIG_BLE_MESH_GENERIC_LEVEL_CLI

Generic Level Client model

Found in: Component config > CONFIG_BLE_MESH > Support for BLE Mesh Client/Server models

Enable support for Generic Level Client model.

CONFIG_BLE_MESH_GENERIC_DEF_TRANS_TIME_CLI

Generic Default Transition Time Client model

Found in: Component config > CONFIG_BLE_MESH > Support for BLE Mesh Client/Server models

Enable support for Generic Default Transition Time Client model.

CONFIG_BLE_MESH_GENERIC_POWER_ONOFF_CLI

Generic Power OnOff Client model

Found in: Component config > CONFIG_BLE_MESH > Support for BLE Mesh Client/Server models

Enable support for Generic Power OnOff Client model.

CONFIG_BLE_MESH_GENERIC_POWER_LEVEL_CLI

Generic Power Level Client model

Found in: Component config > CONFIG_BLE_MESH > Support for BLE Mesh Client/Server models

Enable support for Generic Power Level Client model.

CONFIG_BLE_MESH_GENERIC_BATTERY_CLI

Generic Battery Client model

Found in: Component config > CONFIG_BLE_MESH > Support for BLE Mesh Client/Server models

Enable support for Generic Battery Client model.

CONFIG_BLE_MESH_GENERIC_LOCATION_CLI

Generic Location Client model

Found in: Component config > CONFIG_BLE_MESH > Support for BLE Mesh Client/Server models

Enable support for Generic Location Client model.

CONFIG_BLE_MESH_GENERIC_PROPERTY_CLI

Generic Property Client model

Found in: Component config > CONFIG_BLE_MESH > Support for BLE Mesh Client/Server models

Enable support for Generic Property Client model.

CONFIG_BLE_MESH_SENSOR_CLI

Sensor Client model

Found in: Component config > CONFIG_BLE_MESH > Support for BLE Mesh Client/Server models

Enable support for Sensor Client model.

CONFIG_BLE_MESH_TIME_CLI

Time Client model

Found in: Component config > CONFIG_BLE_MESH > Support for BLE Mesh Client/Server models

Enable support for Time Client model.

CONFIG_BLE_MESH_SCENE_CLI

Scene Client model

Found in: Component config > CONFIG_BLE_MESH > Support for BLE Mesh Client/Server models

Enable support for Scene Client model.

CONFIG_BLE_MESH_SCHEDULER_CLI

Scheduler Client model

Found in: Component config > CONFIG_BLE_MESH > Support for BLE Mesh Client/Server models

Enable support for Scheduler Client model.

CONFIG_BLE_MESH_LIGHT_LIGHTNESS_CLI

Light Lightness Client model

Found in: Component config > CONFIG_BLE_MESH > Support for BLE Mesh Client/Server models

Enable support for Light Lightness Client model.

CONFIG_BLE_MESH_LIGHT_CTL_CLI

Light CTL Client model

Found in: Component config > CONFIG_BLE_MESH > Support for BLE Mesh Client/Server models

Enable support for Light CTL Client model.

CONFIG_BLE_MESH_LIGHT_HSL_CLI

Light HSL Client model

Found in: Component config > CONFIG_BLE_MESH > Support for BLE Mesh Client/Server models

Enable support for Light HSL Client model.

CONFIG_BLE_MESH_LIGHT_XYL_CLI

Light XYL Client model

Found in: Component config > CONFIG_BLE_MESH > Support for BLE Mesh Client/Server models

Enable support for Light XYL Client model.

CONFIG_BLE_MESH_LIGHT_LC_CLI

Light LC Client model

Found in: Component config > CONFIG_BLE_MESH > Support for BLE Mesh Client/Server models

Enable support for Light LC Client model.

CONFIG_BLE_MESH_GENERIC_SERVER

Generic server models

Found in: Component config > CONFIG_BLE_MESH > Support for BLE Mesh Client/Server models

Enable support for Generic server models.

Default value:

- Yes (enabled) if *CONFIG_BLE_MESH*

CONFIG_BLE_MESH_SENSOR_SERVER

Sensor server models

Found in: Component config > CONFIG_BLE_MESH > Support for BLE Mesh Client/Server models

Enable support for Sensor server models.

Default value:

- Yes (enabled) if *CONFIG_BLE_MESH*

CONFIG_BLE_MESH_TIME_SCENE_SERVER

Time and Scenes server models

Found in: Component config > CONFIG_BLE_MESH > Support for BLE Mesh Client/Server models

Enable support for Time and Scenes server models.

Default value:

- Yes (enabled) if *CONFIG_BLE_MESH*

CONFIG_BLE_MESH_LIGHTING_SERVER

Lighting server models

Found in: Component config > CONFIG_BLE_MESH > Support for BLE Mesh Client/Server models

Enable support for Lighting server models.

Default value:

- Yes (enabled) if *CONFIG_BLE_MESH*

CONFIG_BLE_MESH_IV_UPDATE_TEST

Test the IV Update Procedure

Found in: Component config > CONFIG_BLE_MESH

This option removes the 96 hour limit of the IV Update Procedure and lets the state to be changed at any time. If IV Update test mode is going to be used, this option should be enabled.

Default value:

- No (disabled) if *CONFIG_BLE_MESH*

BLE Mesh specific test option

Contains:

- *CONFIG_BLE_MESH_DEBUG*
- *CONFIG_BLE_MESH_SHELL*
- *CONFIG_BLE_MESH_SELF_TEST*

CONFIG_BLE_MESH_SELF_TEST

Perform BLE Mesh self-tests

Found in: Component config > CONFIG_BLE_MESH > BLE Mesh specific test option

This option adds extra self-tests which are run every time BLE Mesh networking is initialized.

Default value:

- No (disabled) if *CONFIG_BLE_MESH*

CONFIG_BLE_MESH_TEST_AUTO_ENTER_NETWORK

Unprovisioned device enters mesh network automatically

Found in: Component config > CONFIG_BLE_MESH > BLE Mesh specific test option > CONFIG_BLE_MESH_SELF_TEST

With this option enabled, an unprovisioned device can automatically enters mesh network using a specific test function without the pro- visioning procedure. And on the Provisioner side, a test function needs to be invoked to add the node information into the mesh stack.

Default value:

- Yes (enabled) if *CONFIG_BLE_MESH_SELF_TEST* && *CONFIG_BLE_MESH*

CONFIG_BLE_MESH_TEST_USE_WHITE_LIST

Use white list to filter mesh advertising packets

Found in: Component config > CONFIG_BLE_MESH > BLE Mesh specific test option > CONFIG_BLE_MESH_SELF_TEST

With this option enabled, users can use white list to filter mesh advertising packets while scanning.

Default value:

- No (disabled) if *CONFIG_BLE_MESH_SELF_TEST* && *CONFIG_BLE_MESH*

CONFIG_BLE_MESH_SHELL

Enable BLE Mesh shell

Found in: Component config > CONFIG_BLE_MESH > BLE Mesh specific test option

Activate shell module that provides BLE Mesh commands to the console.

Default value:

- No (disabled) if *CONFIG_BLE_MESH*

CONFIG_BLE_MESH_DEBUG

Enable BLE Mesh debug logs

Found in: Component config > CONFIG_BLE_MESH > BLE Mesh specific test option

Enable debug logs for the BLE Mesh functionality.

Default value:

- No (disabled) if *CONFIG_BLE_MESH*

CONFIG_BLE_MESH_DEBUG_NET

Network layer debug

Found in: Component config > CONFIG_BLE_MESH > BLE Mesh specific test option > CONFIG_BLE_MESH_DEBUG

Enable Network layer debug logs for the BLE Mesh functionality.

CONFIG_BLE_MESH_DEBUG_TRANS

Transport layer debug

Found in: Component config > CONFIG_BLE_MESH > BLE Mesh specific test option > CONFIG_BLE_MESH_DEBUG

Enable Transport layer debug logs for the BLE Mesh functionality.

CONFIG_BLE_MESH_DEBUG_BEACON

Beacon debug

Found in: Component config > CONFIG_BLE_MESH > BLE Mesh specific test option > CONFIG_BLE_MESH_DEBUG

Enable Beacon-related debug logs for the BLE Mesh functionality.

CONFIG_BLE_MESH_DEBUG_CRYPTO

Crypto debug

Found in: Component config > CONFIG_BLE_MESH > BLE Mesh specific test option > CONFIG_BLE_MESH_DEBUG

Enable cryptographic debug logs for the BLE Mesh functionality.

CONFIG_BLE_MESH_DEBUG_PROV

Provisioning debug

Found in: Component config > CONFIG_BLE_MESH > BLE Mesh specific test option > CONFIG_BLE_MESH_DEBUG

Enable Provisioning debug logs for the BLE Mesh functionality.

CONFIG_BLE_MESH_DEBUG_ACCESS

Access layer debug

Found in: Component config > CONFIG_BLE_MESH > BLE Mesh specific test option > CONFIG_BLE_MESH_DEBUG

Enable Access layer debug logs for the BLE Mesh functionality.

CONFIG_BLE_MESH_DEBUG_MODEL

Foundation model debug

Found in: Component config > CONFIG_BLE_MESH > BLE Mesh specific test option > CONFIG_BLE_MESH_DEBUG

Enable Foundation Models debug logs for the BLE Mesh functionality.

CONFIG_BLE_MESH_DEBUG_ADV

Advertising debug

Found in: Component config > CONFIG_BLE_MESH > BLE Mesh specific test option > CONFIG_BLE_MESH_DEBUG

Enable advertising debug logs for the BLE Mesh functionality.

CONFIG_BLE_MESH_DEBUG_LOW_POWER

Low Power debug

Found in: Component config > CONFIG_BLE_MESH > BLE Mesh specific test option > CONFIG_BLE_MESH_DEBUG

Enable Low Power debug logs for the BLE Mesh functionality.

CONFIG_BLE_MESH_DEBUG_FRIEND

Friend debug

Found in: Component config > CONFIG_BLE_MESH > BLE Mesh specific test option > CONFIG_BLE_MESH_DEBUG

Enable Friend debug logs for the BLE Mesh functionality.

CONFIG_BLE_MESH_DEBUG_PROXY

Proxy debug

Found in: Component config > CONFIG_BLE_MESH > BLE Mesh specific test option > CONFIG_BLE_MESH_DEBUG

Enable Proxy protocol debug logs for the BLE Mesh functionality.

CoAP Configuration Contains:

- *CONFIG_COAP_MBEDTLS_ENCRYPTION_MODE*
- *CONFIG_COAP_MBEDTLS_DEBUG*

CONFIG_COAP_MBEDTLS_ENCRYPTION_MODE

CoAP Encryption method

Found in: Component config > CoAP Configuration

If the CoAP information is to be encrypted, the encryption environment can be set up in one of two ways (default being Pre-Shared key mode)

- Encrypt using defined Pre-Shared Keys (PSK if uri includes coaps://)
- Encrypt using defined Public Key Infrastructure (PKI if uri includes coaps://)

Available options:

- Pre-Shared Keys (COAP_MBEDTLS_PSK)
- PKI Certificates (COAP_MBEDTLS_PKI)

CONFIG_COAP_MBEDTLS_DEBUG

Enable CoAP debugging

Found in: Component config > CoAP Configuration

Enable CoAP debugging functions at compile time for the example code.

If this option is enabled, call coap_set_log_level() at runtime in order to enable CoAP debug output via the ESP log mechanism.

Default value:

- No (disabled)

CONFIG_COAP_MBEDTLS_DEBUG_LEVEL

Set CoAP debugging level

Found in: Component config > CoAP Configuration > CONFIG_COAP_MBEDTLS_DEBUG

Set CoAP debugging level

Available options:

- Emergency (COAP_LOG_EMERG)
- Alert (COAP_LOG_ALERT)
- Critical (COAP_LOG_CRIT)
- Error (COAP_LOG_ERROR)
- Warning (COAP_LOG_WARNING)
- Notice (COAP_LOG_NOTICE)
- Info (COAP_LOG_INFO)
- Debug (COAP_LOG_DEBUG)

Driver configurations Contains:

- *ADC configuration*
- *GPIO Configuration*
- *RTCIO configuration*
- *SPI configuration*
- *TWAI configuration*
- *UART configuration*

ADC configuration Contains:

- *CONFIG_ADC_DISABLE_DAC*
- *CONFIG_ADC_FORCE_XPD_FSM*

CONFIG_ADC_FORCE_XPD_FSM

Use the FSM to control ADC power

Found in: Component config > Driver configurations > ADC configuration

ADC power can be controlled by the FSM instead of software. This allows the ADC to be shut off when it is not working leading to lower power consumption. However using the FSM control ADC power will increase the noise of ADC.

Default value:

- No (disabled)

CONFIG_ADC_DISABLE_DAC

Disable DAC when ADC2 is used on GPIO 25 and 26

Found in: Component config > Driver configurations > ADC configuration

If this is set, the ADC2 driver will disable the output of the DAC corresponding to the specified channel. This is the default value.

For testing, disable this option so that we can measure the output of DAC by internal ADC.

Default value:

- Yes (enabled)

SPI configuration Contains:

- *CONFIG_SPI_MASTER_ISR_IN_IRAM*
- *CONFIG_SPI_SLAVE_ISR_IN_IRAM*
- *CONFIG_SPI_MASTER_IN_IRAM*
- *CONFIG_SPI_SLAVE_IN_IRAM*

CONFIG_SPI_MASTER_IN_IRAM

Place transmitting functions of SPI master into IRAM

Found in: Component config > Driver configurations > SPI configuration

Normally only the ISR of SPI master is placed in the IRAM, so that it can work without the flash when interrupt is triggered. For other functions, there's some possibility that the flash cache miss when running inside and out of SPI functions, which may increase the interval of SPI transactions. Enable this to put `queue\_trans`, `get\_trans\_result` and `transmit` functions into the IRAM to avoid possible cache miss.

During unit test, this is enabled to measure the ideal case of api.

Default value:

- No (disabled)

CONFIG_SPI_MASTER_ISR_IN_IRAM

Place SPI master ISR function into IRAM

Found in: Component config > Driver configurations > SPI configuration

Place the SPI master ISR in to IRAM to avoid possible cache miss.

Also you can forbid the ISR being disabled during flash writing access, by add ESP_INTR_FLAG_IRAM when initializing the driver.

Default value:

- Yes (enabled)

CONFIG_SPI_SLAVE_IN_IRAM

Place transmitting functions of SPI slave into IRAM

Found in: Component config > Driver configurations > SPI configuration

Normally only the ISR of SPI slave is placed in the IRAM, so that it can work without the flash when interrupt is triggered. For other functions, there's some possibility that the flash cache miss when running inside and out of SPI functions, which may increase the interval of SPI transactions. Enable this to put `queue\_trans`, `get\_trans\_result` and `transmit` functions into the IRAM to avoid possible cache miss.

Default value:

- No (disabled)

CONFIG_SPI_SLAVE_ISR_IN_IRAM

Place SPI slave ISR function into IRAM

Found in: Component config > Driver configurations > SPI configuration

Place the SPI slave ISR in to IRAM to avoid possible cache miss.

Also you can forbid the ISR being disabled during flash writing access, by add ESP_INTR_FLAG_IRAM when initializing the driver.

Default value:

- Yes (enabled)

TWAI configuration

Contains:

- *CONFIG_TWAI_ERRATA_FIX_RX_FRAME_INVALID*
- *CONFIG_TWAI_ERRATA_FIX_LISTEN_ONLY_DOM*
- *CONFIG_TWAI_ERRATA_FIX_BUS_OFF_REC*
- *CONFIG_TWAI_ERRATA_FIX_RX_FIFO_CORRUPT*
- *CONFIG_TWAI_ERRATA_FIX_TX_INTR_LOST*
- *CONFIG_TWAI_ISR_IN_IRAM*

CONFIG_TWAI_ISR_IN_IRAM

Place TWAI ISR function into IRAM

Found in: Component config > Driver configurations > TWAI configuration

Place the TWAI ISR in to IRAM. This will allow the ISR to avoid cache misses, and also be able to run whilst the cache is disabled (such as when writing to SPI Flash). Note that if this option is enabled: - Users should also set the ESP_INTR_FLAG_IRAM in the driver configuration structure when installing the driver (see docs for specifics). - Alert logging (i.e., setting of the TWAI_ALERT_AND_LOG flag) will have no effect.

Default value:

- No (disabled)

CONFIG_TWAI_ERRATA_FIX_BUS_OFF_REC

Add SW workaround for REC change during bus-off

Found in: Component config > Driver configurations > TWAI configuration

When the bus-off condition is reached, the REC should be reset to 0 and frozen (via LOM) by the driver's ISR. However on the ESP32, there is an edge case where the REC will increase before the driver's ISR can respond in time (e.g., due to the rapid occurrence of bus errors), thus causing the REC to be non-zero after bus-off. A non-zero REC can prevent bus-off recovery as the bus-off recovery condition is that both TEC and REC become 0. Enabling this option will add a workaround in the driver to forcibly reset REC to zero on reaching bus-off.

Default value:

- No (disabled)

CONFIG_TWAI_ERRATA_FIX_TX_INTR_LOST

Add SW workaround for TX interrupt lost errata

Found in: Component config > Driver configurations > TWAI configuration

On the ESP32, when a transmit interrupt occurs, and interrupt register is read on the same APB clock cycle, the transmit interrupt could be lost. Enabling this option will add a workaround that checks the transmit buffer status bit to recover any lost transmit interrupt.

Default value:

- No (disabled)

CONFIG_TWAI_ERRATA_FIX_RX_FRAME_INVALID

Add SW workaround for invalid RX frame errata

Found in: Component config > Driver configurations > TWAI configuration

On the ESP32, when receiving a data or remote frame, if a bus error occurs in the data or CRC field, the data of the next received frame could be invalid. Enabling this option will add a workaround that will reset the peripheral on detection of this errata condition. Note that if a frame is transmitted on the bus whilst the reset is ongoing, the message will not be receive by the peripheral sent on the bus during the reset, the message will be lost.

Default value:

- No (disabled)

CONFIG_TWAI_ERRATA_FIX_RX_FIFO_CORRUPT

Add SW workaround for RX FIFO corruption errata

Found in: Component config > Driver configurations > TWAI configuration

On the ESP32, when the RX FIFO overruns and the RX message counter maxes out at 64 messages, the entire RX FIFO is no longer recoverable. Enabling this option will add a workaround that resets the peripheral on detection of this errata condition. Note that if a frame is being sent on the bus during the reset bus during the reset, the message will be lost.

Default value:

- No (disabled)

CONFIG_TWAI_ERRATA_FIX_LISTEN_ONLY_DOM

Add SW workaround for listen only transmits dominant bit errata

Found in: Component config > Driver configurations > TWAI configuration

When in the listen only mode, the TWAI controller must not influence the TWAI bus (i.e., must not send any dominant bits). However, while in listen only mode on the ESP32/ESP32-S2/ESP32-S3/ESP32-C3, the TWAI controller will still transmit dominant bits when it detects an error (i.e., as part of an active error frame). Enabling this option will add a workaround that forces the TWAI controller into an error passive state on initialization, thus preventing any dominant bits from being sent.

Default value:

- No (disabled)

UART configuration Contains:

- *CONFIG_UART_ISR_IN_IRAM*

CONFIG_UART_ISR_IN_IRAM

Place UART ISR function into IRAM

Found in: Component config > Driver configurations > UART configuration

If this option is not selected, UART interrupt will be disabled for a long time and may cause data lost when doing spi flash operation.

Default value:

- No (disabled)

RTCIO configuration Contains:

- *CONFIG_RTCIO_SUPPORT_RTC_GPIO_DESC*

CONFIG_RTCIO_SUPPORT_RTC_GPIO_DESC

Support array *rtc_gpio_desc* for ESP32

Found in: Component config > Driver configurations > RTCIO configuration

The the array *rtc_gpio_desc* will don't compile by default. If this option is selected, the array *rtc_gpio_desc* can be compile. If user use this array, please enable this configuration.

Default value:

- No (disabled)

GPIO Configuration Contains:

- *CONFIG_GPIO_ESP32_SUPPORT_SWITCH_SLP_PULL*

CONFIG_GPIO_ESP32_SUPPORT_SWITCH_SLP_PULL

Support light sleep GPIO pullup/pulldown configuration for ESP32

Found in: Component config > Driver configurations > GPIO Configuration

This option is intended to fix the bug that ESP32 is not able to switch to configured pullup/pulldown mode in sleep. If this option is selected, chip will automatically emulate the behaviour of switching, and about 450B of source codes would be placed into IRAM.

eFuse Bit Manager Contains:

- *CONFIG_EFUSE_CODE_SCHEME_SELECTOR*
- *CONFIG_EFUSE_VIRTUAL*
- *CONFIG_EFUSE_CUSTOM_TABLE*

CONFIG_EFUSE_CUSTOM_TABLE

Use custom eFuse table

Found in: Component config > eFuse Bit Manager

Allows to generate a structure for eFuse from the CSV file.

Default value:

- No (disabled)

CONFIG_EFUSE_CUSTOM_TABLE_FILENAME

Custom eFuse CSV file

Found in: Component config > eFuse Bit Manager > CONFIG_EFUSE_CUSTOM_TABLE

Name of the custom eFuse CSV filename. This path is evaluated relative to the project root directory.

Default value:

- "main/esp_efuse_custom_table.csv" if *CONFIG_EFUSE_CUSTOM_TABLE*

CONFIG_EFUSE_VIRTUAL

Simulate eFuse operations in RAM

Found in: Component config > eFuse Bit Manager

All read and writes operations are redirected to RAM instead of eFuse registers. If this option is set, all permanent changes (via eFuse) are disabled. Log output will state changes which would be applied, but they will not be.

Default value:

- No (disabled)

CONFIG_EFUSE_CODE_SCHEME_SELECTOR

Coding Scheme Compatibility

Found in: Component config > eFuse Bit Manager

Selector eFuse code scheme.

Available options:

- None Only (EFUSE_CODE_SCHEME_COMPAT_NONE)
- 3/4 and None (EFUSE_CODE_SCHEME_COMPAT_3_4)
- Repeat, 3/4 and None (common table does not support it) (EFUSE_CODE_SCHEME_COMPAT_REPEAT)

ESP-TLS Contains:

- *CONFIG_ESP_TLS_INSECURE*
- *CONFIG_ESP_TLS_LIBRARY_CHOOSE*
- *CONFIG_ESP_DEBUG_WOLFSSL*
- *CONFIG_ESP_TLS_SERVER*
- *CONFIG_ESP_TLS_PSK_VERIFICATION*
- *CONFIG_ESP_WOLFSSL_SMALL_CERT_VERIFY*
- *CONFIG_ESP_TLS_USE_SECURE_ELEMENT*

CONFIG_ESP_TLS_LIBRARY_CHOOSE

Choose SSL/TLS library for ESP-TLS (See help for more Info)

Found in: Component config > ESP-TLS

The ESP-TLS APIs support multiple backend TLS libraries. Currently mbedTLS and WolfSSL are supported. Different TLS libraries may support different features and have different resource usage. Consult the ESP-TLS documentation in ESP-IDF Programming guide for more details.

Available options:

- mbedTLS (ESP_TLS_USING_MBEDTLS)
- wolfSSL (License info in wolfSSL directory README) (ESP_TLS_USING_WOLFSSL)

CONFIG_ESP_TLS_USE_SECURE_ELEMENT

Use Secure Element (ATECC608A) with ESP-TLS

Found in: Component config > ESP-TLS

Enable use of Secure Element for ESP-TLS, this enables internal support for ATECC608A peripheral on ESPWROOM32SE, which can be used for TLS connection.

Default value:

- No (disabled)

CONFIG_ESP_TLS_SERVER

Enable ESP-TLS Server

Found in: Component config > ESP-TLS

Enable support for creating server side SSL/TLS session, available for mbedTLS as well as wolfSSL TLS library.

Default value:

- No (disabled)

CONFIG_ESP_TLS_PSK_VERIFICATION

Enable PSK verification

Found in: Component config > ESP-TLS

Enable support for pre shared key ciphers, supported for both mbedTLS as well as wolfSSL TLS library.

Default value:

- No (disabled)

CONFIG_ESP_TLS_INSECURE

Allow potentially insecure options

Found in: Component config > ESP-TLS

You can enable some potentially insecure options. These options should only be used for testing pusposes. Only enable these options if you are very sure.

CONFIG_ESP_TLS_SKIP_SERVER_CERT_VERIFY

Skip server certificate verification by default (WARNING: ONLY FOR TESTING PURPOSE, READ HELP)

Found in: Component config > ESP-TLS > CONFIG_ESP_TLS_INSECURE

After enabling this option the esp-tls client will skip the server certificate verification by default. Note that this option will only modify the default behaviour of esp-tls client regarding server cert verification. The default behaviour should only be applicable when no other option regarding the server cert verification is opted in the esp-tls config (e.g. crt_bundle_attach, use_global_ca_store etc.). WARNING : Enabling this option comes with a potential risk of establishing a TLS connection with a server which has a fake identity, provided that the server certificate is not provided either through API or other mechanism like ca_store etc.

CONFIG_ESP_WOLFSSL_SMALL_CERT_VERIFY

Enable SMALL_CERT_VERIFY

Found in: Component config > ESP-TLS

Enables server verification with Intermediate CA cert, does not authenticate full chain of trust upto the root CA cert (After Enabling this option client only needs to have Intermediate CA certificate of the server to authenticate server, root CA cert is not necessary).

Default value:

- Yes (enabled) if ESP_TLS_USING_WOLFSSL

CONFIG_ESP_DEBUG_WOLFSSL

Enable debug logs for wolfSSL

Found in: Component config > ESP-TLS

Enable detailed debug prints for wolfSSL SSL library.

Default value:

- No (disabled) if ESP_TLS_USING_WOLFSSL

ESP32-specific

Contains:

- *CONFIG_ESP32_RTC_EXT_CRYST_ADDIT_CURRENT_METHOD*
- *CONFIG_ESP32_COMPATIBLE_PRE_V3_1_BOOTLOADERS*
- *CONFIG_ESP32_COMPATIBLE_PRE_V2_1_BOOTLOADERS*
- *CONFIG_ESP32_DEFAULT_CPU_FREQ_MHZ*
- *CONFIG_ESP32_DPORT_DIS_INTERRUPT_LVL*
- *CONFIG_ESP32_IRAM_AS_8BIT_ACCESSIBLE_MEMORY*
- *CONFIG_ESP32_ULP_COPROC_ENABLED*
- *CONFIG_ESP32_DEEP_SLEEP_WAKEUP_DELAY*
- *CONFIG_ESP32_BROWNOUT_DET*
- *CONFIG_ESP32_XTAL_FREQ_SEL*
- *CONFIG_ESP32_DEBUG_OCDAWARE*
- *CONFIG_ESP32_REV_MAX_FULL_STR*
- *CONFIG_ESP32_REV_MIN*
- *CONFIG_ESP32_NO_BLOBS*
- *CONFIG_ESP32_RTC_XTAL_CAL_RETRY*
- *CONFIG_ESP32_RTC_CLK_CAL_CYCLES*
- *CONFIG_ESP32_UNIVERSAL_MAC_ADDRESSES*
- *CONFIG_ESP32_DISABLE_BASIC_ROM_CONSOLE*
- *CONFIG_ESP32_RTCDATA_IN_FAST_MEM*
- *CONFIG_ESP32_REDUCE_PHY_TX_POWER*
- *CONFIG_ESP32_RTC_CLK_SRC*
- *CONFIG_ESP32_SPIRAM_SUPPORT*
- *CONFIG_ESP32_TIME_SYSCALL*
- *CONFIG_ESP32_USE_FIXED_STATIC_RAM_SIZE*
- *CONFIG_ESP32_TRAX*

CONFIG_ESP32_REV_MIN

Minimum Supported ESP32 Revision

Found in: Component config > ESP32-specific

Required minimum chip revision. ESP-IDF will check for it and reject to boot if the chip revision fails the check. This ensures the chip used will have some modifications (features, or bugfixes).

The complied binary will only support chips above this revision, this will also help to reduce binary size.

Available options:

- Rev v0.0 (ECO0) (ESP32_REV_MIN_0)
- Rev v1.0 (ECO1) (ESP32_REV_MIN_1)
- Rev v1.1 (ECO1.1) (ESP32_REV_MIN_1_1)
- Rev v2.0 (ECO2) (ESP32_REV_MIN_2)
- Rev v3.0 (ECO3) (ESP32_REV_MIN_3)
- Rev v3.1 (ECO4) (ESP32_REV_MIN_3_1)

CONFIG_ESP32_REV_MAX_FULL_STR

Maximum Supported ESP32 Revision

Found in: Component config > ESP32-specific

Available options:

- Rev v3.99 (ESP32_REV_MAX_FULL_STR_OPT)

CONFIG_ESP32_DEFAULT_CPU_FREQ_MHZ

CPU frequency

Found in: Component config > ESP32-specific

CPU frequency to be set on application startup.

Available options:

- 80 MHz (ESP32_DEFAULT_CPU_FREQ_80)
- 160 MHz (ESP32_DEFAULT_CPU_FREQ_160)
- 240 MHz (ESP32_DEFAULT_CPU_FREQ_240)

CONFIG_ESP32_SPIRAM_SUPPORT

Support for external, SPI-connected RAM

Found in: Component config > ESP32-specific

This enables support for an external SPI RAM chip, connected in parallel with the main SPI flash chip.

Default value:

- No (disabled)

SPI RAM config

Contains:

- *CONFIG_SPIRAM_ALLOW_BSS_SEG_EXTERNAL_MEMORY*
- *CONFIG_SPIRAM_ALLOW_STACK_EXTERNAL_MEMORY*
- *CONFIG_SPIRAM_SPIWP_SD3_PIN*
- *CONFIG_SPIRAM_BANKSWITCH_ENABLE*
- *CONFIG_SPIRAM_2T_MODE*
- *CONFIG_SPIRAM_CACHE_WORKAROUND*
- *CONFIG_SPIRAM_BOOT_INIT*
- *CONFIG_SPIRAM_MALLOC_ALWAYSINTERNAL*
- *PSRAM clock and cs IO for ESP32-D2WD*
- *PSRAM clock and cs IO for ESP32-DOWD*

- *PSRAM clock and cs IO for ESP32-PICO*
- *CONFIG_SPIRAM_MALLOC_RESERVE_INTERNAL*
- *CONFIG_SPIRAM_MEMTEST*
- *CONFIG_SPIRAM_SPEED*
- *CONFIG_SPIRAM_OCCUPY_SPI_HOST*
- *CONFIG_SPIRAM_USE*
- *SPIRAM cache workaround debugging*
- *CONFIG_SPIRAM_TRY_ALLOCATE_WIFI_LWIP*
- *CONFIG_SPIRAM_TYPE*
- *CONFIG_SPIRAM_CUSTOM_SPIWP_SD3_PIN*

CONFIG_SPIRAM_TYPE

Type of SPI RAM chip in use

Found in: Component config > ESP32-specific > CONFIG_ESP32_SPIRAM_SUPPORT > SPI RAM config

Available options:

- Auto-detect (SPIRAM_TYPE_AUTO)
- ESP-PSRAM16 or APS1604 (SPIRAM_TYPE_ESPPSRAM16)
- ESP-PSRAM32 or IS25WP032 (SPIRAM_TYPE_ESPPSRAM32)
- ESP-PSRAM64 or LY68L6400 (SPIRAM_TYPE_ESPPSRAM64)

CONFIG_SPIRAM_SPEED

Set RAM clock speed

Found in: Component config > ESP32-specific > CONFIG_ESP32_SPIRAM_SUPPORT > SPI RAM config

Select the speed for the SPI RAM chip. If SPI RAM is enabled, we only support three combinations of SPI speed mode we supported now:

1. Flash SPI running at 40Mhz and RAM SPI running at 40Mhz
2. Flash SPI running at 80Mhz and RAM SPI running at 40Mhz
3. Flash SPI running at 80Mhz and RAM SPI running at 80Mhz

Note: If the third mode(80Mhz+80Mhz) is enabled for SPI RAM of type 32MBit, one of the HSPI/VSPI host will be occupied by the system. Which SPI host to use can be selected by the config item SPIRAM_OCCUPY_SPI_HOST. Application code should never touch HSPI/VSPI hardware in this case. The option to select 80MHz will only be visible if the flash SPI speed is also 80MHz. (ESPTOOLPY_FLASHFREQ_80M is true)

Available options:

- 40MHz clock speed (SPIRAM_SPEED_40M)
- 80MHz clock speed (SPIRAM_SPEED_80M)

CONFIG_SPIRAM_BOOT_INIT

Initialize SPI RAM during startup

Found in: Component config > ESP32-specific > CONFIG_ESP32_SPIRAM_SUPPORT > SPI RAM config

If this is enabled, the SPI RAM will be enabled during initial boot. Unless you have specific requirements, you'll want to leave this enabled so memory allocated during boot-up can also be placed in SPI RAM.

Default value:

- Yes (enabled) if *CONFIG_ESP32_SPIRAM_SUPPORT*

CONFIG_SPIRAM_IGNORE_NOTFOUND

Ignore PSRAM when not found

Found in: Component config > ESP32-specific > CONFIG_ESP32_SPIRAM_SUPPORT > SPI RAM config > CONFIG_SPIRAM_BOOT_INIT

Normally, if psram initialization is enabled during compile time but not found at runtime, it is seen as an error making the CPU panic. If this is enabled, booting will complete but no PSRAM will be available.

Default value:

- No (disabled) if *CONFIG_SPIRAM_BOOT_INIT* && *CONFIG_SPIRAM_ALLOW_BSS_SEG_EXTERNAL_MEMORY* && *CONFIG_ESP32_SPIRAM_SUPPORT*

CONFIG_SPIRAM_USE

SPI RAM access method

Found in: Component config > ESP32-specific > CONFIG_ESP32_SPIRAM_SUPPORT > SPI RAM config

The SPI RAM can be accessed in multiple methods: by just having it available as an unmanaged memory region in the CPU's memory map, by integrating it in the heap as 'special' memory needing heap_caps_malloc to allocate, or by fully integrating it making malloc() also able to return SPI RAM pointers.

Available options:

- Integrate RAM into memory map (SPIRAM_USE_MEMMAP)
- Make RAM allocatable using heap_caps_malloc(···, MALLOC_CAP_SPIRAM) (SPIRAM_USE_CAPS_ALLOC)
- Make RAM allocatable using malloc() as well (SPIRAM_USE_MALLOC)

CONFIG_SPIRAM_MEMTEST

Run memory test on SPI RAM initialization

Found in: Component config > ESP32-specific > CONFIG_ESP32_SPIRAM_SUPPORT > SPI RAM config

Runs a rudimentary memory test on initialization. Aborts when memory test fails. Disable this for slightly faster startup.

Default value:

- Yes (enabled) if *CONFIG_SPIRAM_BOOT_INIT* && *CONFIG_ESP32_SPIRAM_SUPPORT*

CONFIG_SPIRAM_MALLOC_ALWAYSINTERNAL

Maximum malloc() size, in bytes, to always put in internal memory

Found in: Component config > ESP32-specific > CONFIG_ESP32_SPIRAM_SUPPORT > SPI RAM config

If malloc() is capable of also allocating SPI-connected ram, its allocation strategy will prefer to allocate chunks less than this size in internal memory, while allocations larger than this will be done from external RAM. If allocation from the preferred region fails, an attempt is made to allocate from the non-preferred region instead, so malloc() will not suddenly fail when either internal or external memory is full.

Range:

- from 0 to 131072 if SPIRAM_USE_MALLOC && *CONFIG_ESP32_SPIRAM_SUPPORT*

Default value:

- 16384 if SPIRAM_USE_MALLOC && *CONFIG_ESP32_SPIRAM_SUPPORT*

CONFIG_SPIRAM_TRY_ALLOCATE_WIFI_LWIP

Try to allocate memories of WiFi and LWIP in SPIRAM firstly. If failed, allocate internal memory

Found in: Component config > ESP32-specific > CONFIG_ESP32_SPIRAM_SUPPORT > SPI RAM config

Try to allocate memories of WiFi and LWIP in SPIRAM firstly. If failed, try to allocate internal memory then.

Default value:

- No (disabled) if (SPIRAM_USE_CAPS_ALLOC || SPIRAM_USE_MALLOC) && *CONFIG_ESP32_SPIRAM_SUPPORT*

CONFIG_SPIRAM_MALLOC_RESERVE_INTERNAL

Reserve this amount of bytes for data that specifically needs to be in DMA or internal memory

Found in: Component config > ESP32-specific > CONFIG_ESP32_SPIRAM_SUPPORT > SPI RAM config

Because the external/internal RAM allocation strategy is not always perfect, it sometimes may happen that the internal memory is entirely filled up. This causes allocations that are specifically done in internal memory, for example the stack for new tasks or memory to service DMA or have memory that's also available when SPI cache is down, to fail. This option reserves a pool specifically for requests like that; the memory in this pool is not given out when a normal malloc() is called.

Set this to 0 to disable this feature.

Note that because FreeRTOS stacks are forced to internal memory, they will also use this memory pool; be sure to keep this in mind when adjusting this value.

Note also that the DMA reserved pool may not be one single contiguous memory region, depending on the configured size and the static memory usage of the app.

Range:

- from 0 to 262144 if SPIRAM_USE_MALLOC && *CONFIG_ESP32_SPIRAM_SUPPORT*

Default value:

- 32768 if SPIRAM_USE_MALLOC && *CONFIG_ESP32_SPIRAM_SUPPORT*

CONFIG_SPIRAM_ALLOW_BSS_SEG_EXTERNAL_MEMORY

Allow .bss segment placed in external memory

Found in: Component config > ESP32-specific > CONFIG_ESP32_SPIRAM_SUPPORT > SPI RAM config

If enabled, variables with EXT_RAM_ATTR attribute will be placed in SPIRAM instead of internal DRAM. BSS section of *lwip*, *net80211*, *pp*, *bt* libraries will be automatically placed in SPIRAM. BSS sections from other object files and libraries can also be placed in SPIRAM through linker fragment scheme *extram_bss*.

Note that the variables placed in SPIRAM using EXT_RAM_ATTR will be zero initialized.

CONFIG_SPIRAM_CACHE_WORKAROUND

Enable workaround for bug in SPI RAM cache for Rev1 ESP32s

Found in: Component config > ESP32-specific > CONFIG_ESP32_SPIRAM_SUPPORT > SPI RAM config

Revision 1 of the ESP32 has a bug that can cause a write to PSRAM not to take place in some situations when the cache line needs to be fetched from external RAM and an interrupt occurs. This enables a fix in the compiler (-mfix-esp32-psram-cache-issue) that makes sure the specific code that is vulnerable to this will not be emitted.

This will also not use any bits of newlib that are located in ROM, opting for a version that is compiled with the workaround and located in flash instead.

The workaround is not required for ESP32 revision 3 and above.

Default value:

- Yes (enabled) if (SPIRAM_USE_MEMMAP || SPIRAM_USE_CAPS_ALLOC || SPIRAM_USE_MALLOC) && *CONFIG_ESP32_SPIRAM_SUPPORT*

SPIRAM cache workaround debugging Contains:

- *CONFIG_SPIRAM_CACHE_WORKAROUND_STRATEGY*

CONFIG_SPIRAM_CACHE_WORKAROUND_STRATEGY

Workaround strategy

Found in: Component config > ESP32-specific > CONFIG_ESP32_SPIRAM_SUPPORT > SPI RAM config > SPIRAM cache workaround debugging

Select the workaround strategy. Note that the strategy for precompiled libraries (libgcc, newlib, bt, wifi) is not affected by this selection.

Unless you know you need a different strategy, it's suggested you stay with the default MEMW strategy. Note that DUPLDST can interfere with hardware encryption and this will be automatically disabled if this workaround is selected. 'Insert nops' is the workaround that was used in older esp-idf versions. This workaround still can cause faulty data transfers from/to SPI RAM in some situation.

Available options:

- Insert memw after vulnerable instructions (default) (SPIRAM_CACHE_WORKAROUND_STRATEGY_MEMW)
- Duplicate LD/ST for 32-bit, memw for 8/16 bit (SPIRAM_CACHE_WORKAROUND_STRATEGY_DUPLDST)
- Insert nops between vulnerable loads/stores (old strategy, obsolete) (SPIRAM_CACHE_WORKAROUND_STRATEGY_NOPS)

CONFIG_SPIRAM_BANKSWITCH_ENABLE

Enable bank switching for >4MiB external RAM

Found in: Component config > ESP32-specific > CONFIG_ESP32_SPIRAM_SUPPORT > SPI RAM config

The ESP32 only supports 4MiB of external RAM in its address space. The hardware does support larger memories, but these have to be bank-switched in and out of this address space. Enabling this allows you to reserve some MMU pages for this, which allows the use of the esp_himem api to manage these banks.

#Note that this is limited to 62 banks, as esp_spiram_writeback_cache needs some kind of mapping of #some banks below that mark to work. We cannot at this moment guarantee this to exist when himem is #enabled.

If spiram 2T mode is enabled, the size of 64Mbit psram will be changed as 32Mbit, so himem will be unusable.

Default value:

- Yes (enabled) if (SPIRAM_USE_MEMMAP || SPIRAM_USE_CAPS_ALLOC || SPIRAM_USE_MALLOC) && *CONFIG_ESP32_SPIRAM_SUPPORT*

CONFIG_SPIRAM_BANKSWITCH_RESERVE

Amount of 32K pages to reserve for bank switching

Found in: Component config > ESP32-specific > CONFIG_ESP32_SPIRAM_SUPPORT > SPI RAM config > CONFIG_SPIRAM_BANKSWITCH_ENABLE

Select the amount of banks reserved for bank switching. Note that the amount of RAM allocatable with malloc/esp_heap_alloc_caps will decrease by 32K for each page reserved here.

Note that this reservation is only actually done if your program actually uses the himem API. Without any himem calls, the reservation is not done and the original amount of memory will be available to malloc/esp_heap_alloc_caps.

Range:

- from 1 to 62 if *CONFIG_SPIRAM_BANKSWITCH_ENABLE* && *CONFIG_ESP32_SPIRAM_SUPPORT*

Default value:

- 8 if *CONFIG_SPIRAM_BANKSWITCH_ENABLE* && *CONFIG_ESP32_SPIRAM_SUPPORT*

CONFIG_SPIRAM_ALLOW_STACK_EXTERNAL_MEMORY

Allow external memory as an argument to xTaskCreateStatic

Found in: Component config > ESP32-specific > CONFIG_ESP32_SPIRAM_SUPPORT > SPI RAM config

Because some bits of the ESP32 code environment cannot be recompiled with the cache workaround, normally tasks cannot be safely run with their stack residing in external memory; for this reason xTaskCreate and friends always allocate stack in internal memory and xTaskCreateStatic will check if the memory passed to it is in internal memory. If you have a task that needs a large amount of stack and does not call on ROM code in any way (no direct calls, but also no Bluetooth/WiFi), you can try to disable this and use xTaskCreateStatic to create the tasks stack in external memory.

Default value:

- No (disabled) if SPIRAM_USE_MALLOC && *CONFIG_ESP32_SPIRAM_SUPPORT*

CONFIG_SPIRAM_OCCUPY_SPI_HOST

SPI host to use for 32MBit PSRAM

Found in: Component config > ESP32-specific > CONFIG_ESP32_SPIRAM_SUPPORT > SPI RAM config

When both flash and PSRAM is working under 80MHz, and the PSRAM is of type 32MBit, one of the HSPI/VSPI host will be used to output the clock. Select which one to use here.

Available options:

- HSPI host (SPI2) (SPIRAM_OCCUPY_HSPI_HOST)
- VSPI host (SPI3) (SPIRAM_OCCUPY_VSPI_HOST)
- Will not try to use any host, will abort if not able to use the PSRAM (SPIRAM_OCCUPY_NO_HOST)

PSRAM clock and cs IO for ESP32-DOWD

Contains:

- *CONFIG_D0WD_PSRAM_CLK_IO*
- *CONFIG_D0WD_PSRAM_CS_IO*

CONFIG_D0WD_PSRAM_CLK_IO

PSRAM CLK IO number

Found in: Component config > ESP32-specific > CONFIG_ESP32_SPIRAM_SUPPORT > SPI RAM config > PSRAM clock and cs IO for ESP32-DOWD

The PSRAM CLOCK IO can be any unused GPIO, user can config it based on hardware design. If user use 1.8V flash and 1.8V psram, this value can only be one of 6, 7, 8, 9, 10, 11, 16, 17.

Range:

- from 0 to 33 if *CONFIG_ESP32_SPIRAM_SUPPORT* && *CONFIG_ESP32_SPIRAM_SUPPORT*

Default value:

- 17 if *CONFIG_ESP32_SPIRAM_SUPPORT* && *CONFIG_ESP32_SPIRAM_SUPPORT*

CONFIG_D0WD_PSRAM_CS_IO

PSRAM CS IO number

Found in: Component config > ESP32-specific > CONFIG_ESP32_SPIRAM_SUPPORT > SPI RAM config > PSRAM clock and cs IO for ESP32-DOWD

The PSRAM CS IO can be any unused GPIO, user can config it based on hardware design. If user use 1.8V flash and 1.8V psram, this value can only be one of 6, 7, 8, 9, 10, 11, 16, 17.

Range:

- from 0 to 33 if *CONFIG_ESP32_SPIRAM_SUPPORT* && *CONFIG_ESP32_SPIRAM_SUPPORT*

Default value:

- 16 if *CONFIG_ESP32_SPIRAM_SUPPORT* && *CONFIG_ESP32_SPIRAM_SUPPORT*

PSRAM clock and cs IO for ESP32-D2WD Contains:

- *CONFIG_D2WD_PSRAM_CLK_IO*
- *CONFIG_D2WD_PSRAM_CS_IO*

CONFIG_D2WD_PSRAM_CLK_IO

PSRAM CLK IO number

Found in: Component config > ESP32-specific > CONFIG_ESP32_SPIRAM_SUPPORT > SPI RAM config > PSRAM clock and cs IO for ESP32-D2WD

User can config it based on hardware design. For ESP32-D2WD chip, the psram can only be 1.8V psram, so this value can only be one of 6, 7, 8, 9, 10, 11, 16, 17.

Range:

- from 0 to 33 if *CONFIG_ESP32_SPIRAM_SUPPORT* && *CONFIG_ESP32_SPIRAM_SUPPORT*

Default value:

- 9 if *CONFIG_ESP32_SPIRAM_SUPPORT* && *CONFIG_ESP32_SPIRAM_SUPPORT*

CONFIG_D2WD_PSRAM_CS_IO

PSRAM CS IO number

Found in: Component config > ESP32-specific > CONFIG_ESP32_SPIRAM_SUPPORT > SPI RAM config > PSRAM clock and cs IO for ESP32-D2WD

User can config it based on hardware design. For ESP32-D2WD chip, the psram can only be 1.8V psram, so this value can only be one of 6, 7, 8, 9, 10, 11, 16, 17.

Range:

- from 0 to 33 if *CONFIG_ESP32_SPIRAM_SUPPORT* && *CONFIG_ESP32_SPIRAM_SUPPORT*

Default value:

- 10 if *CONFIG_ESP32_SPIRAM_SUPPORT* && *CONFIG_ESP32_SPIRAM_SUPPORT*

PSRAM clock and cs IO for ESP32-PICO Contains:

- *CONFIG_PICO_PSRAM_CS_IO*

CONFIG_PICO_PSRAM_CS_IO

PSRAM CS IO number

Found in: Component config > ESP32-specific > CONFIG_ESP32_SPIRAM_SUPPORT > SPI RAM config > PSRAM clock and cs IO for ESP32-PICO

The PSRAM CS IO can be any unused GPIO, user can config it based on hardware design.

For ESP32-PICO chip, the psram share clock with flash, so user do not need to configure the clock IO. For the reference hardware design, please refer to https://www.espressif.com/sites/default/files/documentation/esp32-pico-d4_datasheet_en.pdf

Range:

- from 0 to 33 if *CONFIG_ESP32_SPIRAM_SUPPORT* && *CONFIG_ESP32_SPIRAM_SUPPORT*

Default value:

- 10 if *CONFIG_ESP32_SPIRAM_SUPPORT* && *CONFIG_ESP32_SPIRAM_SUPPORT*

CONFIG_SPIRAM_CUSTOM_SPIWP_SD3_PIN

Use custom SPI PSRAM WP(SD3) Pin when flash pins set in eFuse (read help)

Found in: Component config > ESP32-specific > CONFIG_ESP32_SPIRAM_SUPPORT > SPI RAM config

This setting is only used if the SPI flash pins have been overridden by setting the eFuses SPI_PAD_CONFIG_xxx, and the SPI flash mode is DIO or DOUT.

When this is the case, the eFuse config only defines 3 of the 4 Quad I/O data pins. The WP pin (aka ESP32 pin "SD_DATA_3" or SPI flash pin "IO2") is not specified in eFuse. The psram only has QPI mode, so a WP pin setting is necessary.

If this config item is set to N (default), the correct WP pin will be automatically used for any Espressif chip or module with integrated flash. If a custom setting is needed, set this config item to Y and specify the GPIO number connected to the WP pin.

When flash mode is set to QIO or QOUT, the PSRAM WP pin will be set the same as the SPI Flash WP pin configured in the bootloader.

Default value:

- No (disabled) if (ESPTOOLPY_FLASHMODE_DIO || ESPTOOLPY_FLASHMODE_DOUT) && *CONFIG_ESP32_SPIRAM_SUPPORT*

CONFIG_SPIRAM_SPIWP_SD3_PIN

Custom SPI PSRAM WP(SD3) Pin

Found in: Component config > ESP32-specific > CONFIG_ESP32_SPIRAM_SUPPORT > SPI RAM config

The option "Use custom SPI PSRAM WP(SD3) pin" must be set or this value is ignored

If burning a customized set of SPI flash pins in eFuse and using DIO or DOUT mode for flash, set this value to the GPIO number of the SPIRAM WP pin.

Range:

- from 0 to 33 if (ESPTOOLPY_FLASHMODE_DIO || ESPTOOLPY_FLASHMODE_DOUT) && *CONFIG_ESP32_SPIRAM_SUPPORT*

Default value:

- 7 if (ESPTOOLPY_FLASHMODE_DIO || ESPTOOLPY_FLASHMODE_DOUT) && *CONFIG_ESP32_SPIRAM_SUPPORT*

CONFIG_SPIRAM_2T_MODE

Enable SPI PSRAM 2T mode

Found in: Component config > ESP32-specific > CONFIG_ESP32_SPIRAM_SUPPORT > SPI RAM config

Enable this option to fix single bit errors inside 64Mbit PSRAM.

Some 64Mbit PSRAM chips have a hardware issue in the RAM which causes bit errors at multiple fixed bit positions.

Note: If this option is enabled, the 64Mbit PSRAM chip will appear to be 32Mbit in size. Applications will not be affected unless the use the esp_himem APIs, which are not supported in 2T mode.

Default value:

- No (disabled) if *CONFIG_ESP32_SPIRAM_SUPPORT* && *CONFIG_ESP32_SPIRAM_SUPPORT*

CONFIG_ESP32_TRAX

Use TRAX tracing feature

Found in: Component config > ESP32-specific

The ESP32 contains a feature which allows you to trace the execution path the processor has taken through the program. This is stored in a chunk of 32K (16K for single-processor) of memory that can't be used for general purposes anymore. Disable this if you do not know what this is.

Default value:

- No (disabled)

CONFIG_ESP32_TRAX_TWOBANKS

Reserve memory for tracing both pro as well as app cpu execution

Found in: Component config > ESP32-specific > CONFIG_ESP32_TRAX

The ESP32 contains a feature which allows you to trace the execution path the processor has taken through the program. This is stored in a chunk of 32K (16K for single-processor) of memory that can't be used for general purposes anymore. Disable this if you do not know what this is.

Memory to reverse for trace, used in linker script

Default value:

- No (disabled) if *CONFIG_ESP32_TRAX* && *CONFIG_FREERTOS_UNICORE*

CONFIG_ESP32_UNIVERSAL_MAC_ADDRESSES

Number of universally administered (by IEEE) MAC address

Found in: Component config > ESP32-specific

Configure the number of universally administered (by IEEE) MAC addresses. During initialization, MAC addresses for each network interface are generated or derived from a single base MAC address. If the number of universal MAC addresses is four, all four interfaces (WiFi station, WiFi softap, Bluetooth and Ethernet) receive a universally administered MAC address. These are generated sequentially by adding 0, 1, 2 and 3 (respectively) to the final octet of the base MAC address. If the number of universal MAC addresses is two, only two interfaces (WiFi station and Bluetooth) receive a universally administered MAC address. These are generated sequentially by adding 0 and 1 (respectively) to the base MAC address. The remaining two interfaces (WiFi softap and Ethernet) receive local MAC addresses. These are derived from the universal WiFi station and Bluetooth MAC addresses, respectively. When using the default (Espressif-assigned) base MAC address, either setting can be used. When using a custom universal MAC address range, the correct setting will depend on the allocation of MAC addresses in this range (either 2 or 4 per device.)

Available options:

- Two (ESP32_UNIVERSAL_MAC_ADDRESSES_TWO)
- Four (ESP32_UNIVERSAL_MAC_ADDRESSES_FOUR)

CONFIG_ESP32_ULP_COPROC_ENABLED

Enable Ultra Low Power (ULP) Coprocessor

Found in: Component config > ESP32-specific

Set to 'y' if you plan to load a firmware for the coprocessor.

If this option is enabled, further coprocessor configuration will appear in the Components menu.

Default value:

- No (disabled)

CONFIG_ESP32_ULP_COPROC_RESERVE_MEM

RTC slow memory reserved for coprocessor

Found in: Component config > ESP32-specific > CONFIG_ESP32_ULP_COPROC_ENABLED

Bytes of memory to reserve for ULP coprocessor firmware & data.

Data is reserved at the beginning of RTC slow memory.

Range:

- from 32 to 8176 if *CONFIG_ESP32_ULP_COPROC_ENABLED*
- from 0 to 0 if *CONFIG_ESP32_ULP_COPROC_ENABLED*

Default value:

- 512 if *CONFIG_ESP32_ULP_COPROC_ENABLED*
- 0 if *CONFIG_ESP32_ULP_COPROC_ENABLED*

CONFIG_ESP32_DEBUG_OCDAWARE

Make exception and panic handlers JTAG/OCD aware

Found in: Component config > ESP32-specific

The FreeRTOS panic and unhandled exception handers can detect a JTAG OCD debugger and instead of panicking, have the debugger stop on the offending instruction.

Default value:

- Yes (enabled)

CONFIG_ESP32_BROWNOUT_DET

Hardware brownout detect & reset

Found in: Component config > ESP32-specific

The ESP32 has a built-in brownout detector which can detect if the voltage is lower than a specific value. If this happens, it will reset the chip in order to prevent unintended behaviour.

Default value:

- Yes (enabled)

CONFIG_ESP32_BROWNOUT_DET_LVL_SEL

Brownout voltage level

Found in: Component config > ESP32-specific > CONFIG_ESP32_BROWNOUT_DET

The brownout detector will reset the chip when the supply voltage is approximately below this level. Note that there may be some variation of brownout voltage level between each ESP32 chip.

#The voltage levels here are estimates, more work needs to be done to figure out the exact voltages #of the brownout threshold levels.

Available options:

- 2.43V +/- 0.05 (ESP32_BROWNOUT_DET_LVL_SEL_0)
- 2.48V +/- 0.05 (ESP32_BROWNOUT_DET_LVL_SEL_1)
- 2.58V +/- 0.05 (ESP32_BROWNOUT_DET_LVL_SEL_2)
- 2.62V +/- 0.05 (ESP32_BROWNOUT_DET_LVL_SEL_3)
- 2.67V +/- 0.05 (ESP32_BROWNOUT_DET_LVL_SEL_4)
- 2.70V +/- 0.05 (ESP32_BROWNOUT_DET_LVL_SEL_5)
- 2.77V +/- 0.05 (ESP32_BROWNOUT_DET_LVL_SEL_6)
- 2.80V +/- 0.05 (ESP32_BROWNOUT_DET_LVL_SEL_7)

CONFIG_ESP32_REDUCE_PHY_TX_POWER

Reduce PHY TX power when brownout reset

Found in: Component config > ESP32-specific

When brownout reset occurs, reduce PHY TX power to keep the code running

Note about the use of "FRC1" name: currently FRC1 timer is not used for # high resolution time-keeping anymore. Instead the esp_timer API is used. # FRC1 name in the option name is kept for compatibility.

Default value:

- No (disabled)

CONFIG_ESP32_TIME_SYSCALL

Timers used for gettimeofday function

Found in: Component config > ESP32-specific

This setting defines which hardware timers are used to implement 'gettimeofday' and 'time' functions in C library.

- If both high-resolution and RTC timers are used, timekeeping will continue in deep sleep. Time will be reported at 1 microsecond resolution. This is the default, and the recommended option.
- If only high-resolution timer is used, gettimeofday will provide time at microsecond resolution. Time will not be preserved when going into deep sleep mode.
- If only RTC timer is used, timekeeping will continue in deep sleep, but time will be measured at 6.(6) microsecond resolution. Also the gettimeofday function itself may take longer to run.
- If no timers are used, gettimeofday and time functions return -1 and set errno to ENOSYS.
- When RTC is used for timekeeping, two RTC_STORE registers are used to keep time in deep sleep mode.

Available options:

- RTC and high-resolution timer (ESP32_TIME_SYSCALL_USE_RTC_FRC1)
- RTC (ESP32_TIME_SYSCALL_USE_RTC)
- High-resolution timer (ESP32_TIME_SYSCALL_USE_FRC1)
- None (ESP32_TIME_SYSCALL_USE_NONE)

CONFIG_ESP32_RTC_CLK_SRC

RTC clock source

Found in: Component config > ESP32-specific

Choose which clock is used as RTC clock source.

- "Internal 150kHz oscillator" option provides lowest deep sleep current consumption, and does not require extra external components. However frequency stability with respect to temperature is poor, so time may drift in deep/light sleep modes.
- "External 32kHz crystal" provides better frequency stability, at the expense of slightly higher (1uA) deep sleep current consumption.

- “External 32kHz oscillator” allows using 32kHz clock generated by an external circuit. In this case, external clock signal must be connected to 32K_XN pin. Amplitude should be <1.2V in case of sine wave signal, and <1V in case of square wave signal. Common mode voltage should be 0.1 < Vcm < 0.5Vamp, where Vamp is the signal amplitude. Additionally, 1nF capacitor must be connected between 32K_XP pin and ground. 32K_XP pin can not be used as a GPIO in this case.
- “Internal 8.5MHz oscillator divided by 256” option results in higher deep sleep current (by 5uA) but has better frequency stability than the internal 150kHz oscillator. It does not require external components.

Available options:

- Internal 150kHz RC oscillator (ESP32_RTC_CLK_SRC_INT_RC)
- External 32kHz crystal (ESP32_RTC_CLK_SRC_EXT_CRYS)
- External 32kHz oscillator at 32K_XN pin (ESP32_RTC_CLK_SRC_EXT_OSC)
- Internal 8.5MHz oscillator, divided by 256 (~33kHz) (ESP32_RTC_CLK_SRC_INT_8MD256)

CONFIG_ESP32_RTC_EXT_CRYST_ADDIT_CURRENT_METHOD

Additional current for external 32kHz crystal

Found in: Component config > ESP32-specific

With some 32kHz crystal configurations, the X32N and X32P pins may not have enough drive strength to keep the crystal oscillating. Choose the method to provide additional current from touchpad 9 to the external 32kHz crystal. Note that the deep sleep current is slightly high (4-5uA) and the touchpad and the wakeup sources of both touchpad and ULP are not available in method 1 and method 2.

This problem is fixed in ESP32 ECO 3, so this workaround is not needed. Setting the project configuration to minimum revision ECO3 will disable this option, , allow all wakeup sources, and save some code size.

- “None” option will not provide additional current to external crystal
- “Method 1” option can’t ensure 100% to solve the external 32k crystal start failed issue, but the touchpad can work in this method.
- “Method 2” option can solve the external 32k issue, but the touchpad can’t work in this method.

Available options:

- None (ESP32_RTC_EXT_CRYST_ADDIT_CURRENT_NONE)
- Method 1 (ESP32_RTC_EXT_CRYST_ADDIT_CURRENT)
- Method 2 (ESP32_RTC_EXT_CRYST_ADDIT_CURRENT_V2)

CONFIG_ESP32_RTC_CLK_CAL_CYCLES

Number of cycles for RTC_SLOW_CLK calibration

Found in: Component config > ESP32-specific

When the startup code initializes RTC_SLOW_CLK, it can perform calibration by comparing the RTC_SLOW_CLK frequency with main XTAL frequency. This option sets the number of RTC_SLOW_CLK cycles measured by the calibration routine. Higher numbers increase calibration precision, which may be important for applications which spend a lot of time in deep sleep. Lower numbers reduce startup time.

When this option is set to 0, clock calibration will not be performed at startup, and approximate clock frequencies will be assumed:

- 150000 Hz if internal RC oscillator is used as clock source. For this use value 1024.
- 32768 Hz if the 32k crystal oscillator is used. For this use value 3000 or more. In case more value will help improve the definition of the launch of the crystal. If the crystal could not start, it will be switched to internal RC.

Range:

- from 0 to 27000 if ESP32_RTC_CLK_SRC_EXT_CRYS || ESP32_RTC_CLK_SRC_EXT_OSC || ESP32_RTC_CLK_SRC_INT_8MD256
- from 0 to 32766

Default value:

- 3000 if ESP32_RTC_CLK_SRC_EXT_CRYS || ESP32_RTC_CLK_SRC_EXT_OSC || ESP32_RTC_CLK_SRC_INT_8MD256
- 1024

CONFIG_ESP32_RTC_XTAL_CAL_RETRY

Number of attempts to repeat 32k XTAL calibration

Found in: Component config > ESP32-specific

Number of attempts to repeat 32k XTAL calibration before giving up and switching to the internal RC. Increase this option if the 32k crystal oscillator does not start and switches to internal RC.

Default value:

- 1 if ESP32_RTC_CLK_SRC_EXT_CRYS

CONFIG_ESP32_DEEP_SLEEP_WAKEUP_DELAY

Extra delay in deep sleep wake stub (in us)

Found in: Component config > ESP32-specific

When ESP32 exits deep sleep, the CPU and the flash chip are powered on at the same time. CPU will run deep sleep stub first, and then proceed to load code from flash. Some flash chips need sufficient time to pass between power on and first read operation. By default, without any extra delay, this time is approximately 900us, although some flash chip types need more than that.

By default extra delay is set to 2000us. When optimizing startup time for applications which require it, this value may be reduced.

If you are seeing "flash read err, 1000" message printed to the console after deep sleep reset, try increasing this value.

Range:

- from 0 to 5000

Default value:

- 2000

CONFIG_ESP32_XTAL_FREQ_SEL

Main XTAL frequency

Found in: Component config > ESP32-specific

ESP32 currently supports the following XTAL frequencies:

- 26 MHz
- 40 MHz

Startup code can automatically estimate XTAL frequency. This feature uses the internal 8MHz oscillator as a reference. Because the internal oscillator frequency is temperature dependent, it is not recommended to use automatic XTAL frequency detection in applications which need to work at high ambient temperatures and use high-temperature qualified chips and modules.

Available options:

- 40 MHz (ESP32_XTAL_FREQ_40)
- 26 MHz (ESP32_XTAL_FREQ_26)
- Autodetect (ESP32_XTAL_FREQ_AUTO)

CONFIG_ESP32_DISABLE_BASIC_ROM_CONSOLE

Permanently disable BASIC ROM Console

Found in: Component config > ESP32-specific

If set, the first time the app boots it will disable the BASIC ROM Console permanently (by burning an eFuse).

Otherwise, the BASIC ROM Console starts on reset if no valid bootloader is read from the flash.

(Enabling secure boot also disables the BASIC ROM Console by default.)

Default value:

- No (disabled)

CONFIG_ESP32_NO_BLOBS

No Binary Blobs

Found in: Component config > ESP32-specific

If enabled, this disables the linking of binary libraries in the application build. Note that after enabling this Wi-Fi/Bluetooth will not work.

Default value:

- No (disabled) if *CONFIG_BT_ENABLED*

CONFIG_ESP32_COMPATIBLE_PRE_V2_1_BOOTLOADERS

App compatible with bootloaders before ESP-IDF v2.1

Found in: Component config > ESP32-specific

Bootloaders before ESP-IDF v2.1 did less initialisation of the system clock. This setting needs to be enabled to build an app which can be booted by these older bootloaders.

If this setting is enabled, the app can be booted by any bootloader from IDF v1.0 up to the current version.

If this setting is disabled, the app can only be booted by bootloaders from IDF v2.1 or newer.

Enabling this setting adds approximately 1KB to the app’s IRAM usage.

Default value:

- No (disabled)

CONFIG_ESP32_COMPATIBLE_PRE_V3_1_BOOTLOADERS

App compatible with bootloader and partition table before ESP-IDF v3.1

Found in: Component config > ESP32-specific

Partition tables before ESP-IDF V3.1 do not contain an MD5 checksum field, and the bootloader before ESP-IDF v3.1 cannot read a partition table that contains an MD5 checksum field.

Enable this option only if your app needs to boot on a bootloader and/or partition table that was generated from a version *before* ESP-IDF v3.1.

If this option and Flash Encryption are enabled at the same time, and any data partitions in the partition table are marked Encrypted, then the partition encrypted flag should be manually verified in the app before accessing the partition (see CVE-2021-27926).

Default value:

- No (disabled)

CONFIG_ESP32_RTCDATA_IN_FAST_MEM

Place RTC_DATA_ATTR and RTC_RODATA_ATTR variables into RTC fast memory segment

Found in: Component config > ESP32-specific

This option allows to place .rtc_data and .rtc_rodata sections into RTC fast memory segment to free the slow memory region for ULP programs. This option depends on the CONFIG_FREERTOS_UNICORE option because RTC fast memory can be accessed only by PRO_CPU core.

Default value:

- No (disabled) if *CONFIG_FREERTOS_UNICORE*

CONFIG_ESP32_USE_FIXED_STATIC_RAM_SIZE

Use fixed static RAM size

Found in: Component config > ESP32-specific

If this option is disabled, the DRAM part of the heap starts right after the .bss section, within the dram0_0 region. As a result, adding or removing some static variables will change the available heap size.

If this option is enabled, the DRAM part of the heap starts right after the dram0_0 region, where its length is set with ESP32_FIXED_STATIC_RAM_SIZE

Default value:

- No (disabled)

CONFIG_ESP32_FIXED_STATIC_RAM_SIZE

Fixed Static RAM size

Found in: Component config > ESP32-specific > CONFIG_ESP32_USE_FIXED_STATIC_RAM_SIZE

RAM size dedicated for static variables (.data & .bss sections). Please note that the actual length will be reduced by BTDM_RESERVE_DRAM if Bluetooth controller is enabled.

Range:

- from 0 to 0x2c200 if *CONFIG_ESP32_USE_FIXED_STATIC_RAM_SIZE*

Default value:

- “0x1E000” if *CONFIG_ESP32_USE_FIXED_STATIC_RAM_SIZE*

CONFIG_ESP32_DPORT_DIS_INTERRUPT_LVL

Disable the interrupt level for the DPORT workarounds

Found in: Component config > ESP32-specific

To prevent interrupting DPORT workarounds, need to disable interrupt with a maximum used level in the system.

Default value:

- 5

CONFIG_ESP32_IRAM_AS_8BIT_ACCESSIBLE_MEMORY

Enable IRAM as 8 bit accessible memory

Found in: Component config > ESP32-specific

If enabled, application can use IRAM as byte accessible region for storing data (Note: IRAM region cannot be used as task stack)

This is possible due to handling of exceptions *LoadStoreError (3)* and *LoadStoreAlignmentError (9)* Each unaligned read/write access will incur a penalty of maximum of 167 CPU cycles.

ADC-Calibration Contains:

- *CONFIG_ADC_CAL_EFUSE_VREF_ENABLE*
- *CONFIG_ADC_CAL_LUT_ENABLE*
- *CONFIG_ADC_CAL_EFUSE_TP_ENABLE*

CONFIG_ADC_CAL_EFUSE_TP_ENABLE

Use Two Point Values

Found in: Component config > ADC-Calibration

Some ESP32s have Two Point calibration values burned into eFuse BLOCK3. This option will allow the ADC calibration component to characterize the ADC-Voltage curve using Two Point values if they are available.

Default value:

- Yes (enabled)

CONFIG_ADC_CAL_EFUSE_VREF_ENABLE

Use eFuse Vref

Found in: Component config > ADC-Calibration

Some ESP32s have Vref burned into eFuse BLOCK0. This option will allow the ADC calibration component to characterize the ADC-Voltage curve using eFuse Vref if it is available.

Default value:

- Yes (enabled)

CONFIG_ADC_CAL_LUT_ENABLE

Use Lookup Tables

Found in: Component config > ADC-Calibration

This option will allow the ADC calibration component to use Lookup Tables to correct for non-linear behavior in 11db attenuation. Other attenuations do not exhibit non-linear behavior hence will not be affected by this option.

Default value:

- Yes (enabled)

Common ESP-related Contains:

- *CONFIG_ESP_CONSOLE_UART*
- *CONFIG_ESP_ERR_TO_NAME_LOOKUP*
- *CONFIG_ESP_SYSTEM_EVENT_TASK_STACK_SIZE*
- *CONFIG_ESP_TASK_WDT*
- *CONFIG_ESP_IPC_TASK_STACK_SIZE*
- *CONFIG_ESP_INT_WDT*
- *CONFIG_ESP_IPC_USES_CALLERS_PRIORITY*
- *CONFIG_ESP_MAIN_TASK_STACK_SIZE*
- *CONFIG_ESP_MINIMAL_SHARED_STACK_SIZE*
- *CONFIG_ESP_PANIC_HANDLER_IRAM*
- *CONFIG_ESP_SYSTEM_EVENT_QUEUE_SIZE*
- *CONFIG_ESP_CONSOLE_UART_BAUDRATE*
- *CONFIG_ESP_CONSOLE_UART_NUM*
- *CONFIG_ESP_CONSOLE_UART_RX_GPIO*
- *CONFIG_ESP_CONSOLE_UART_TX_GPIO*

CONFIG_ESP_ERR_TO_NAME_LOOKUP

Enable lookup of error code strings

Found in: Component config > Common ESP-related

Functions esp_err_to_name() and esp_err_to_name_r() return string representations of error codes from a pre-generated lookup table. This option can be used to turn off the use of the look-up table in order to save memory but this comes at the price of sacrificing distinguishable (meaningful) output string representations.

Default value:

- Yes (enabled)

CONFIG_ESP_SYSTEM_EVENT_QUEUE_SIZE

System event queue size

Found in: Component config > Common ESP-related

Config system event queue size in different application.

Default value:

- 32

CONFIG_ESP_SYSTEM_EVENT_TASK_STACK_SIZE

Event loop task stack size

Found in: Component config > Common ESP-related

Config system event task stack size in different application.

Default value:

- 2304

CONFIG_ESP_MAIN_TASK_STACK_SIZE

Main task stack size

Found in: Component config > Common ESP-related

Configure the "main task" stack size. This is the stack of the task which calls app_main(). If app_main() returns then this task is deleted and its stack memory is freed.

Default value:

- 3584

CONFIG_ESP_IPC_TASK_STACK_SIZE

Inter-Processor Call (IPC) task stack size

Found in: Component config > Common ESP-related

Configure the IPC tasks stack size. One IPC task runs on each core (in dual core mode), and allows for cross-core function calls.

See IPC documentation for more details.

The default stack size should be enough for most common use cases. It can be shrunk if you are sure that you do not use any custom IPC functionality.

Range:

- from 512 to 65536

Default value:

- 1024

CONFIG_ESP_IPC_USES_CALLERS_PRIORITY

IPC runs at caller’ s priority

Found in: Component config > Common ESP-related

If this option is not enabled then the IPC task will keep behavior same as prior to that of ESP-IDF v4.0, and hence IPC task will run at (configMAX_PRIORITIES - 1) priority.

Default value:

- Yes (enabled) if *CONFIG_FREERTOS_UNICORE*

CONFIG_ESP_MINIMAL_SHARED_STACK_SIZE

Minimal allowed size for shared stack

Found in: Component config > Common ESP-related

Minimal value of size, in bytes, accepted to execute a expression with shared stack.

Default value:

- 2048

CONFIG_ESP_CONSOLE_UART

Channel for console output

Found in: Component config > Common ESP-related

Select where to send console output (through stdout and stderr).

- Default is to use UART0 on pre-defined GPIOs.
- If “Custom” is selected, UART0 or UART1 can be chosen, and any pins can be selected.
- If “None” is selected, there will be no console output on any UART, except for initial output from ROM bootloader. This ROM output can be suppressed by GPIO strapping or EFUSE, refer to chip datasheet for details.
- On chips with USB OTG peripheral, “USB CDC” option redirects output to the CDC port. This option uses the CDC driver in the chip ROM. This option is incompatible with TinyUSB stack.
- On chips with an USB serial/JTAG debug controller, selecting the option for that redirects output to the CDC/ACM (serial port emulation) component of that device.

Available options:

- Default: UART0 (ESP_CONSOLE_UART_DEFAULT)
- USB CDC (ESP_CONSOLE_USB_CDC)
- USB Serial/JTAG Controller (ESP_CONSOLE_USB_SERIAL_JTAG)
- Custom UART (ESP_CONSOLE_UART_CUSTOM)
- None (ESP_CONSOLE_NONE)

CONFIG_ESP_CONSOLE_UART_NUM

UART peripheral to use for console output (0-1)

Found in: Component config > Common ESP-related

This UART peripheral is used for console output from the ESP-IDF Bootloader and the app.

If the configuration is different in the Bootloader binary compared to the app binary, UART is reconfigured after the bootloader exits and the app starts.

Due to an ESP32 ROM bug, UART2 is not supported for console output via esp_rom_printf.

Available options:

- UART0 (ESP_CONSOLE_UART_CUSTOM_NUM_0)
- UART1 (ESP_CONSOLE_UART_CUSTOM_NUM_1)

CONFIG_ESP_CONSOLE_UART_TX_GPIO

UART TX on GPIO#

Found in: Component config > Common ESP-related

This GPIO is used for console UART TX output in the ESP-IDF Bootloader and the app (including boot log output and default standard output and standard error of the app).

If the configuration is different in the Bootloader binary compared to the app binary, UART is reconfigured after the bootloader exits and the app starts.

Range:
- from 0 to 46 if ESP_CONSOLE_UART_CUSTOM

Default value:
- 1 if ESP_CONSOLE_UART_CUSTOM
- 43 if ESP_CONSOLE_UART_CUSTOM

CONFIG_ESP_CONSOLE_UART_RX_GPIO

UART RX on GPIO#

Found in: Component config > Common ESP-related

This GPIO is used for UART RX input in the ESP-IDF Bootloader and the app (including default default standard input of the app).

Note: The default ESP-IDF Bootloader configures this pin but doesn't read anything from the UART.

If the configuration is different in the Bootloader binary compared to the app binary, UART is reconfigured after the bootloader exits and the app starts.

Range:
- from 0 to 46 if ESP_CONSOLE_UART_CUSTOM

Default value:
- 3 if ESP_CONSOLE_UART_CUSTOM
- 44 if ESP_CONSOLE_UART_CUSTOM

CONFIG_ESP_CONSOLE_UART_BAUDRATE

UART console baud rate

Found in: Component config > Common ESP-related

This baud rate is used by both the ESP-IDF Bootloader and the app (including boot log output and default standard input/output/error of the app).

The app's maximum baud rate depends on the UART clock source. If Power Management is disabled, the UART clock source is the APB clock and all baud rates in the available range will be sufficiently accurate. If Power Management is enabled, REF_TICK clock source is used so the baud rate is divided from 1MHz. Baud rates above 1Mbps are not possible and values between 500Kbps and 1Mbps may not be accurate.

If the configuration is different in the Bootloader binary compared to the app binary, UART is reconfigured after the bootloader exits and the app starts.

Range:
- from 1200 to 4000000 if *CONFIG_PM_ENABLE*
- from 1200 to 1000000 if *CONFIG_PM_ENABLE*

Default value:
- 115200

CONFIG_ESP_INT_WDT

Interrupt watchdog

Found in: Component config > Common ESP-related

This watchdog timer can detect if the FreeRTOS tick interrupt has not been called for a certain time, either because a task turned off interrupts and did not turn them on for a long time, or because an interrupt handler did not return. It will try to invoke the panic handler first and failing that reset the SoC.

Default value:

- Yes (enabled)

CONFIG_ESP_INT_WDT_TIMEOUT_MS

Interrupt watchdog timeout (ms)

Found in: Component config > Common ESP-related > CONFIG_ESP_INT_WDT

The timeout of the watchdog, in miliseconds. Make this higher than the FreeRTOS tick rate.

Range:

- from 10 to 10000

Default value:

- 300 if *CONFIG_ESP32_SPIRAM_SUPPORT* && *CONFIG_ESP_INT_WDT*
- 800 if *CONFIG_ESP32_SPIRAM_SUPPORT* && *CONFIG_ESP_INT_WDT*

CONFIG_ESP_INT_WDT_CHECK_CPU1

Also watch CPU1 tick interrupt

Found in: Component config > Common ESP-related > CONFIG_ESP_INT_WDT

Also detect if interrupts on CPU 1 are disabled for too long.

Default value:

- Yes (enabled) if *CONFIG_ESP_INT_WDT* && *CONFIG_FREERTOS_UNICORE*

CONFIG_ESP_TASK_WDT

Initialize Task Watchdog Timer on startup

Found in: Component config > Common ESP-related

The Task Watchdog Timer can be used to make sure individual tasks are still running. Enabling this option will cause the Task Watchdog Timer to be initialized automatically at startup. The Task Watchdog timer can be initialized after startup as well (see Task Watchdog Timer API Reference)

Default value:

- Yes (enabled)

CONFIG_ESP_TASK_WDT_PANIC

Invoke panic handler on Task Watchdog timeout

Found in: Component config > Common ESP-related > CONFIG_ESP_TASK_WDT

If this option is enabled, the Task Watchdog Timer will be configured to trigger the panic handler when it times out. This can also be configured at run time (see Task Watchdog Timer API Reference)

Default value:

- No (disabled)

CONFIG_ESP_TASK_WDT_TIMEOUT_S

Task Watchdog timeout period (seconds)

Found in: Component config > Common ESP-related > CONFIG_ESP_TASK_WDT

Timeout period configuration for the Task Watchdog Timer in seconds. This is also configurable at run time (see Task Watchdog Timer API Reference)

Range:
- from 1 to 60

Default value:
- 5

CONFIG_ESP_TASK_WDT_CHECK_IDLE_TASK_CPU0

Watch CPU0 Idle Task

Found in: Component config > Common ESP-related > CONFIG_ESP_TASK_WDT

If this option is enabled, the Task Watchdog Timer will watch the CPU0 Idle Task. Having the Task Watchdog watch the Idle Task allows for detection of CPU starvation as the Idle Task not being called is usually a symptom of CPU starvation. Starvation of the Idle Task is detrimental as FreeRTOS household tasks depend on the Idle Task getting some runtime every now and then.

Default value:
- Yes (enabled)

CONFIG_ESP_TASK_WDT_CHECK_IDLE_TASK_CPU1

Watch CPU1 Idle Task

Found in: Component config > Common ESP-related > CONFIG_ESP_TASK_WDT

If this option is enabled, the Task Wtachdog Timer will wach the CPU1 Idle Task.

Default value:
- Yes (enabled) if *CONFIG_ESP_TASK_WDT* && *CONFIG_FREERTOS_UNICORE*

CONFIG_ESP_PANIC_HANDLER_IRAM

Place panic handler code in IRAM

Found in: Component config > Common ESP-related

If this option is disabled (default), the panic handler code is placed in flash not IRAM. This means that if ESP-IDF crashes while flash cache is disabled, the panic handler will automatically re-enable flash cache before running GDB Stub or Core Dump. This adds some minor risk, if the flash cache status is also corrupted during the crash.

If this option is enabled, the panic handler code is placed in IRAM. This allows the panic handler to run without needing to re-enable cache first. This may be necessary to debug some complex issues with crashes while flash cache is disabled (for example, when writing to SPI flash.)

Default value:
- No (disabled)

Ethernet

Contains:

- *CONFIG_ETH_USE_ESP32_EMAC*
- *CONFIG_ETH_USE_OPENETH*
- *CONFIG_ETH_USE_SPI_ETHERNET*

CONFIG_ETH_USE_ESP32_EMAC

Support ESP32 internal EMAC controller

Found in: Component config > Ethernet

ESP32 integrates a 10/100M Ethernet MAC controller.

Default value:

- Yes (enabled)

Contains:

- *CONFIG_ETH_DMA_RX_BUFFER_NUM*
- *CONFIG_ETH_DMA_TX_BUFFER_NUM*
- *CONFIG_ETH_SOFT_FLOW_CONTROL*
- *CONFIG_ETH_DMA_BUFFER_SIZE*
- *CONFIG_ETH_RMII_CLK_OUTPUT_GPIO0*
- *CONFIG_ETH_PHY_INTERFACE*
- *CONFIG_ETH_RMII_CLK_OUT_GPIO*
- *CONFIG_ETH_RMII_CLK_MODE*

CONFIG_ETH_PHY_INTERFACE

PHY interface

Found in: Component config > Ethernet > CONFIG_ETH_USE_ESP32_EMAC

Select the communication interface between MAC and PHY chip.

Available options:

- Reduced Media Independent Interface (RMII) (ETH_PHY_INTERFACE_RMII)
- Media Independent Interface (MII) (ETH_PHY_INTERFACE_MII)

CONFIG_ETH_RMII_CLK_MODE

RMII clock mode

Found in: Component config > Ethernet > CONFIG_ETH_USE_ESP32_EMAC

Select external or internal RMII clock.

Available options:

- Input RMII clock from external (ETH_RMII_CLK_INPUT)
  MAC will get RMII clock from outside. Note that ESP32 only supports GPIO0 to input the RMII clock.
- Output RMII clock from internal (ETH_RMII_CLK_OUTPUT)
  ESP32 can generate RMII clock by internal APLL. This clock can be routed to the external PHY device. ESP32 supports to route the RMII clock to GPIO0/16/17.

CONFIG_ETH_RMII_CLK_OUTPUT_GPIO0

Output RMII clock from GPIO0 (Experimental!)

Found in: Component config > Ethernet > CONFIG_ETH_USE_ESP32_EMAC

GPIO0 can be set to output a pre-divided PLL clock (test only!). Enabling this option will configure GPIO0 to output a 50MHz clock. In fact this clock doesn't have directly relationship with EMAC peripheral. Sometimes this clock won't work well with your PHY chip. You might need to add some extra devices after GPIO0 (e.g. inverter). Note that outputting RMII clock on GPIO0 is an experimental practice. If you want the Ethernet to work with WiFi, don't select GPIO0 output mode for stability.

Default value:

- No (disabled) if ETH_RMII_CLK_OUTPUT && *CONFIG_ETH_USE_ESP32_EMAC*

CONFIG_ETH_RMII_CLK_OUT_GPIO

RMII clock GPIO number

Found in: Component config > Ethernet > CONFIG_ETH_USE_ESP32_EMAC

Set the GPIO number to output RMII Clock.

Range:
- from 16 to 17 if *CONFIG_ETH_RMII_CLK_OUTPUT_GPIO0* && ETH_RMII_CLK_OUTPUT && *CONFIG_ETH_USE_ESP32_EMAC*

Default value:
- 17 if *CONFIG_ETH_RMII_CLK_OUTPUT_GPIO0* && ETH_RMII_CLK_OUTPUT && *CONFIG_ETH_USE_ESP32_EMAC*

CONFIG_ETH_DMA_BUFFER_SIZE

Ethernet DMA buffer size (Byte)

Found in: Component config > Ethernet > CONFIG_ETH_USE_ESP32_EMAC

Set the size of each buffer used by Ethernet MAC DMA.

Range:
- from 256 to 1600

Default value:
- 512

CONFIG_ETH_DMA_RX_BUFFER_NUM

Amount of Ethernet DMA Rx buffers

Found in: Component config > Ethernet > CONFIG_ETH_USE_ESP32_EMAC

Number of DMA receive buffers. Each buffer’ s size is ETH_DMA_BUFFER_SIZE. Larger number of buffers could increase throughput somehow.

Range:
- from 3 to 30

Default value:
- 10

CONFIG_ETH_DMA_TX_BUFFER_NUM

Amount of Ethernet DMA Tx buffers

Found in: Component config > Ethernet > CONFIG_ETH_USE_ESP32_EMAC

Number of DMA transmit buffers. Each buffer’ s size is ETH_DMA_BUFFER_SIZE. Larger number of buffers could increase throughput somehow.

Range:
- from 3 to 30

Default value:
- 10

CONFIG_ETH_SOFT_FLOW_CONTROL

Enable software flow control

Found in: Component config > Ethernet > CONFIG_ETH_USE_ESP32_EMAC

Ethernet MAC engine on ESP32 doesn’ t feature a flow control logic. The MAC driver can perform a software flow control if you enable this option. Note that, if the RX buffer number is small, enabling software flow control will cause obvious performance loss.

Default value:

- No (disabled) if *CONFIG_ETH_DMA_RX_BUFFER_NUM* > 15 && *CONFIG_ETH_USE_ESP32_EMAC*

CONFIG_ETH_USE_SPI_ETHERNET

Support SPI to Ethernet Module

Found in: Component config > Ethernet

ESP-IDF can also support some SPI-Ethernet modules.

Default value:

- Yes (enabled)

Contains:

- *CONFIG_ETH_SPI_ETHERNET_DM9051*
- *CONFIG_ETH_SPI_ETHERNET_W5500*

CONFIG_ETH_SPI_ETHERNET_DM9051

Use DM9051

Found in: Component config > Ethernet > CONFIG_ETH_USE_SPI_ETHERNET

DM9051 is a fast Ethernet controller with an SPI interface. It’s also integrated with a 10/100M PHY and MAC. Select this to enable DM9051 driver.

CONFIG_ETH_SPI_ETHERNET_W5500

Use W5500 (MAC RAW)

Found in: Component config > Ethernet > CONFIG_ETH_USE_SPI_ETHERNET

W5500 is a HW TCP/IP embedded Ethernet controller. TCP/IP stack, 10/100 Ethernet MAC and PHY are embedded in a single chip. However the driver in ESP-IDF only enables the RAW MAC mode, making it compatible with the software TCP/IP stack. Say yes to enable W5500 driver.

CONFIG_ETH_USE_OPENETH

Support OpenCores Ethernet MAC (for use with QEMU)

Found in: Component config > Ethernet

OpenCores Ethernet MAC driver can be used when an ESP-IDF application is executed in QEMU. This driver is not supported when running on a real chip.

Default value:

- No (disabled)

Contains:

- *CONFIG_ETH_OPENETH_DMA_RX_BUFFER_NUM*
- *CONFIG_ETH_OPENETH_DMA_TX_BUFFER_NUM*

CONFIG_ETH_OPENETH_DMA_RX_BUFFER_NUM

Number of Ethernet DMA Rx buffers

Found in: Component config > Ethernet > CONFIG_ETH_USE_OPENETH

Number of DMA receive buffers, each buffer is 1600 bytes.

Range:

- from 1 to 64 if *CONFIG_ETH_USE_OPENETH*

Default value:

- 4 if *CONFIG_ETH_USE_OPENETH*

CONFIG_ETH_OPENETH_DMA_TX_BUFFER_NUM

Number of Ethernet DMA Tx buffers

Found in: Component config > Ethernet > CONFIG_ETH_USE_OPENETH

Number of DMA transmit buffers, each buffer is 1600 bytes.

Range:

- from 1 to 64 if *CONFIG_ETH_USE_OPENETH*

Default value:

- 1 if *CONFIG_ETH_USE_OPENETH*

Event Loop Library

Contains:

- *CONFIG_ESP_EVENT_LOOP_PROFILING*
- *CONFIG_ESP_EVENT_POST_FROM_ISR*

CONFIG_ESP_EVENT_LOOP_PROFILING

Enable event loop profiling

Found in: Component config > Event Loop Library

Enables collections of statistics in the event loop library such as the number of events posted to/recieved by an event loop, number of callbacks involved, number of events dropped to to a full event loop queue, run time of event handlers, and number of times/run time of each event handler.

Default value:

- No (disabled)

CONFIG_ESP_EVENT_POST_FROM_ISR

Support posting events from ISRs

Found in: Component config > Event Loop Library

Enable posting events from interrupt handlers.

Default value:

- Yes (enabled)

CONFIG_ESP_EVENT_POST_FROM_IRAM_ISR

Support posting events from ISRs placed in IRAM

Found in: Component config > Event Loop Library > CONFIG_ESP_EVENT_POST_FROM_ISR

Enable posting events from interrupt handlers placed in IRAM. Enabling this option places API functions esp_event_post and esp_event_post_to in IRAM.

Default value:

- Yes (enabled)

GDB Stub

Contains:

- *CONFIG_ESP_GDBSTUB_SUPPORT_TASKS*

CONFIG_ESP_GDBSTUB_SUPPORT_TASKS

Enable listing FreeRTOS tasks through GDB Stub

Found in: Component config > GDB Stub

If enabled, GDBStub can supply the list of FreeRTOS tasks to GDB. Thread list can be queried from GDB using ‘info threads’ command. Note that if GDB task lists were corrupted, this feature may not work. If GDBStub fails, try disabling this feature.

CONFIG_ESP_GDBSTUB_MAX_TASKS

Maximum number of tasks supported by GDB Stub

Found in: Component config > GDB Stub > CONFIG_ESP_GDBSTUB_SUPPORT_TASKS

Set the number of tasks which GDB Stub will support.

Default value:

- 32 if *CONFIG_ESP_GDBSTUB_SUPPORT_TASKS*

ESP HTTP client Contains:

- *CONFIG_ESP_HTTP_CLIENT_ENABLE_BASIC_AUTH*
- *CONFIG_ESP_HTTP_CLIENT_ENABLE_HTTPS*

CONFIG_ESP_HTTP_CLIENT_ENABLE_HTTPS

Enable https

Found in: Component config > ESP HTTP client

This option will enable https protocol by linking esp-tls library and initializing SSL transport

Default value:

- Yes (enabled)

CONFIG_ESP_HTTP_CLIENT_ENABLE_BASIC_AUTH

Enable HTTP Basic Authentication

Found in: Component config > ESP HTTP client

This option will enable HTTP Basic Authentication. It is disabled by default as Basic auth uses unencrypted encoding, so it introduces a vulnerability when not using TLS

Default value:

- No (disabled)

HTTP Server Contains:

- *CONFIG_HTTPD_PURGE_BUF_LEN*
- *CONFIG_HTTPD_LOG_PURGE_DATA*
- *CONFIG_HTTPD_MAX_REQ_HDR_LEN*
- *CONFIG_HTTPD_MAX_URI_LEN*
- *CONFIG_HTTPD_ERR_RESP_NO_DELAY*
- *CONFIG_HTTPD_WS_SUPPORT*

CONFIG_HTTPD_MAX_REQ_HDR_LEN

Max HTTP Request Header Length

Found in: Component config > HTTP Server

This sets the maximum supported size of headers section in HTTP request packet to be processed by the server

Default value:

- 512

CONFIG_HTTPD_MAX_URI_LEN

Max HTTP URI Length

Found in: Component config > HTTP Server

This sets the maximum supported size of HTTP request URI to be processed by the server

Default value:

- 512

CONFIG_HTTPD_ERR_RESP_NO_DELAY

Use TCP_NODELAY socket option when sending HTTP error responses

Found in: Component config > HTTP Server

Using TCP_NODEALY socket option ensures that HTTP error response reaches the client before the underlying socket is closed. Please note that turning this off may cause multiple test failures

Default value:

- Yes (enabled)

CONFIG_HTTPD_PURGE_BUF_LEN

Length of temporary buffer for purging data

Found in: Component config > HTTP Server

This sets the size of the temporary buffer used to receive and discard any remaining data that is received from the HTTP client in the request, but not processed as part of the server HTTP request handler.

If the remaining data is larger than the available buffer size, the buffer will be filled in multiple iterations. The buffer should be small enough to fit on the stack, but large enough to avoid excessive iterations.

Default value:

- 32

CONFIG_HTTPD_LOG_PURGE_DATA

Log purged content data at Debug level

Found in: Component config > HTTP Server

Enabling this will log discarded binary HTTP request data at Debug level. For large content data this may not be desirable as it will clutter the log.

Default value:

- No (disabled)

CONFIG_HTTPD_WS_SUPPORT

WebSocket server support

Found in: Component config > HTTP Server

This sets the WebSocket server support.

Default value:

- No (disabled)

ESP HTTPS OTA

Contains:

- *CONFIG_OTA_ALLOW_HTTP*

CONFIG_OTA_ALLOW_HTTP

Allow HTTP for OTA (WARNING: ONLY FOR TESTING PURPOSE, READ HELP)

Found in: Component config > ESP HTTPS OTA

It is highly recommended to keep HTTPS (along with server certificate validation) enabled. Enabling this option comes with potential risk of: - Non-encrypted communication channel with server - Accepting firmware upgrade image from server with fake identity

Default value:

- No (disabled)

ESP HTTPS server

Contains:

- *CONFIG_ESP_HTTPS_SERVER_ENABLE*

CONFIG_ESP_HTTPS_SERVER_ENABLE

Enable ESP_HTTPS_SERVER component

Found in: Component config > ESP HTTPS server

Enable ESP HTTPS server component

ESP NETIF Adapter

Contains:

- *CONFIG_ESP_NETIF_TCPIP_ADAPTER_COMPATIBLE_LAYER*
- *CONFIG_ESP_NETIF_IP_LOST_TIMER_INTERVAL*
- *CONFIG_ESP_NETIF_USE_TCPIP_STACK_LIB*

CONFIG_ESP_NETIF_IP_LOST_TIMER_INTERVAL

IP Address lost timer interval (seconds)

Found in: Component config > ESP NETIF Adapter

The value of 0 indicates the IP lost timer is disabled, otherwise the timer is enabled.

The IP address may be lost because of some reasons, e.g. when the station disconnects from soft-AP, or when DHCP IP renew fails etc. If the IP lost timer is enabled, it will be started everytime the IP is lost. Event SYSTEM_EVENT_STA_LOST_IP will be raised if the timer expires. The IP lost timer is stopped if the station get the IP again before the timer expires.

Range:

- from 0 to 65535

Default value:

- 120

CONFIG_ESP_NETIF_USE_TCPIP_STACK_LIB

TCP/IP Stack Library

Found in: Component config > ESP NETIF Adapter

Choose the TCP/IP Stack to work, for example, LwIP, uIP, etc.

Available options:

- LwIP (ESP_NETIF_TCPIP_LWIP)
  lwIP is a small independent implementation of the TCP/IP protocol suite.
- Loopback (ESP_NETIF_LOOPBACK)
  Dummy implementation of esp-netif functionality which connects driver transmit to receive function. This option is for testing purpose only

CONFIG_ESP_NETIF_TCPIP_ADAPTER_COMPATIBLE_LAYER

Enable backward compatible tcpip_adapter interface

Found in: Component config > ESP NETIF Adapter

Backward compatible interface to tcpip_adapter is enabled by default to support legacy TCP/IP stack initialisation code. Disable this option to use only esp-netif interface.

Default value:

- Yes (enabled)

Power Management Contains:

- *CONFIG_PM_SLP_DISABLE_GPIO*
- *CONFIG_PM_SLP_IRAM_OPT*
- *CONFIG_PM_RTOS_IDLE_OPT*
- *CONFIG_PM_ENABLE*

CONFIG_PM_ENABLE

Support for power management

Found in: Component config > Power Management

If enabled, application is compiled with support for power management. This option has run-time overhead (increased interrupt latency, longer time to enter idle state), and it also reduces accuracy of RTOS ticks and timers used for timekeeping. Enable this option if application uses power management APIs.

Default value:

- No (disabled)

CONFIG_PM_DFS_INIT_AUTO

Enable dynamic frequency scaling (DFS) at startup

Found in: Component config > Power Management > CONFIG_PM_ENABLE

If enabled, startup code configures dynamic frequency scaling. Max CPU frequency is set to DEFAULT_CPU_FREQ_MHZ setting, min frequency is set to XTAL frequency. If disabled, DFS will not be active until the application configures it using esp_pm_configure function.

Default value:

- No (disabled) if *CONFIG_PM_ENABLE*

CONFIG_PM_USE_RTC_TIMER_REF

Use RTC timer to prevent time drift (EXPERIMENTAL)

Found in: Component config > Power Management > CONFIG_PM_ENABLE

When APB clock frequency changes, high-resolution timer (esp_timer) scale and base value need to be adjusted. Each adjustment may cause small error, and over time such small errors may cause time drift. If this option is enabled, RTC timer will be used as a reference to compensate for the drift. It is recommended that this option is only used if 32k XTAL is selected as RTC clock source.

Default value:

- No (disabled) if *CONFIG_PM_ENABLE* && ESP_TIMER_IMPL_FRC2

CONFIG_PM_PROFILING

Enable profiling counters for PM locks

Found in: Component config > Power Management > CONFIG_PM_ENABLE

If enabled, esp_pm_* functions will keep track of the amount of time each of the power management locks has been held, and esp_pm_dump_locks function will print this information. This feature can be used to analyze which locks are preventing the chip from going into a lower power state, and see what time the chip spends in each power saving mode. This feature does incur some run-time overhead, so should typically be disabled in production builds.

Default value:

- No (disabled) if *CONFIG_PM_ENABLE*

CONFIG_PM_TRACE

Enable debug tracing of PM using GPIOs

Found in: Component config > Power Management > CONFIG_PM_ENABLE

If enabled, some GPIOs will be used to signal events such as RTOS ticks, frequency switching, entry/exit from idle state. Refer to pm_trace.c file for the list of GPIOs. This feature is intended to be used when analyzing/debugging behavior of power management implementation, and should be kept disabled in applications.

Default value:

- No (disabled) if *CONFIG_PM_ENABLE*

CONFIG_PM_SLP_IRAM_OPT

Put lightsleep related codes in internal RAM

Found in: Component config > Power Management

If enabled, about 1.8KB of lightsleep related source code would be in IRAM and chip would sleep longer for 760us at most each time. This feature is intended to be used when lower power consumption is needed while there is enough place in IRAM to place source code.

CONFIG_PM_RTOS_IDLE_OPT

Put RTOS IDLE related codes in internal RAM

Found in: Component config > Power Management

If enabled, about 260B of RTOS_IDLE related source code would be in IRAM and chip would sleep longer for 40us at most each time. This feature is intended to be used when lower power consumption is needed while there is enough place in IRAM to place source code.

CONFIG_PM_SLP_DISABLE_GPIO

Disable all GPIO when chip at sleep

Found in: Component config > Power Management

This feature is intended to disable all GPIO pins at automantic sleep to get a lower power mode. If enabled, chips will disable all GPIO pins at automantic sleep to reduce about 200~300 uA current. If you want to specifically use some pins normally as chip wakes when chip sleeps, you can call ‘gpio_sleep_sel_dis’ to disable this feature on those pins. You can also keep this feature on and call ‘gpio_sleep_set_direction’ and ‘gpio_sleep_set_pull_mode’ to have a different GPIO configuration at sleep. Waring: If you want to enable this option on ESP32, you should enable *GPIO_ESP32_SUPPORT_SWITCH_SLP_PULL* at first, otherwise you will not be able to switch pullup/pulldown mode.

ESP System Settings Contains:

- *CONFIG_ESP_SYSTEM_RTC_EXT_XTAL_BOOTSTRAP_CYCLES*
- *CONFIG_ESP_SYSTEM_ALLOW_RTC_FAST_MEM_AS_HEAP*
- *CONFIG_ESP_SYSTEM_FLASH_LEAKAGE_WORKAROUND*
- *Memory protection*
- *CONFIG_ESP_SYSTEM_PANIC*
- *CONFIG_ESP_SYSTEM_PD_FLASH*
- *CONFIG_ESP_SYSTEM_PSRAM_LEAKAGE_WORKAROUND*
- *RTC Clock Config*

CONFIG_ESP_SYSTEM_PANIC

Panic handler behaviour

Found in: Component config > ESP System Settings

If FreeRTOS detects unexpected behaviour or an unhandled exception, the panic handler is invoked. Configure the panic handler’s action here.

Available options:

- Print registers and halt (ESP_SYSTEM_PANIC_PRINT_HALT)
  Outputs the relevant registers over the serial port and halt the processor. Needs a manual reset to restart.
- Print registers and reboot (ESP_SYSTEM_PANIC_PRINT_REBOOT)
  Outputs the relevant registers over the serial port and immediately reset the processor.
- Silent reboot (ESP_SYSTEM_PANIC_SILENT_REBOOT)
  Just resets the processor without outputting anything
- Invoke GDBStub (ESP_SYSTEM_PANIC_GDBSTUB)
  Invoke gdbstub on the serial port, allowing for gdb to attach to it to do a postmortem of the crash.

CONFIG_ESP_SYSTEM_RTC_EXT_XTAL_BOOTSTRAP_CYCLES

Bootstrap cycles for external 32kHz crystal

Found in: Component config > ESP System Settings

To reduce the startup time of an external RTC crystal, we bootstrap it with a 32kHz square wave for a fixed number of cycles. Setting 0 will disable bootstrapping (if disabled, the crystal may take longer to start up or fail to oscillate under some conditions).

If this value is too high, a faulty crystal may initially start and then fail. If this value is too low, an otherwise good crystal may not start.

To accurately determine if the crystal has started, set a larger “Number of cycles for RTC_SLOW_CLK calibration” (about 3000).

CONFIG_ESP_SYSTEM_ALLOW_RTC_FAST_MEM_AS_HEAP

Enable RTC fast memory for dynamic allocations

Found in: Component config > ESP System Settings

This config option allows to add RTC fast memory region to system heap with capability similar to that of DRAM region but without DMA. This memory will be consumed first per heap initialization order by early startup services and scheduler related code. Speed wise RTC fast memory operates on APB clock and hence does not have much performance impact.

CONFIG_ESP_SYSTEM_PD_FLASH

PD flash at light sleep when there is no SPIRAM

Found in: Component config > ESP System Settings

If enabled, chip will try to power down flash at light sleep, which costs more time when chip wakes up. Can only be enabled if there is no SPIRAM configured. This option will in fact consider VDD_SDIO auto power value (ESP_PD_OPTION_AUTO) as OFF. Also, it is possible to force a power domain to stay ON during light sleep by using esp_sleep_pd_config() function.

Default value:

- Yes (enabled)

CONFIG_ESP_SYSTEM_PSRAM_LEAKAGE_WORKAROUND

PSRAM leakage current workaround in light sleep

Found in: Component config > ESP System Settings

When the CS pin of SPIRAM is not pulled up, the sleep current will increase during light sleep. If the CS pin of SPIRAM has an external pull-up, you do not need to select this option, otherwise, you should enable this option.

CONFIG_ESP_SYSTEM_FLASH_LEAKAGE_WORKAROUND

Flash leakage current workaround in light sleep

Found in: Component config > ESP System Settings

When the CS pin of Flash is not pulled up, the sleep current will increase during light sleep. If the CS pin of Flash has an external pull-up, you do not need to select this option, otherwise, you should enable this option.

RTC Clock Config

Memory protection

High resolution timer (esp_timer)

Contains:

- *CONFIG_ESP_TIMER_PROFILING*
- *CONFIG_ESP_TIMER_IMPL*
- *CONFIG_ESP_TIMER_TASK_STACK_SIZE*

CONFIG_ESP_TIMER_PROFILING

Enable esp_timer profiling features

Found in: Component config > High resolution timer (esp_timer)

If enabled, esp_timer_dump will dump information such as number of times the timer was started, number of times the timer has triggered, and the total time it took for the callback to run. This option has some effect on timer performance and the amount of memory used for timer storage, and should only be used for debugging/testing purposes.

Default value:

- No (disabled)

CONFIG_ESP_TIMER_TASK_STACK_SIZE

High-resolution timer task stack size

Found in: Component config > High resolution timer (esp_timer)

Configure the stack size of "timer_task" task. This task is used to dispatch callbacks of timers created using ets_timer and esp_timer APIs. If you are seing stack overflow errors in timer task, increase this value.

Note that this is not the same as FreeRTOS timer task. To configure FreeRTOS timer task size, see "FreeRTOS timer task stack size" option in "FreeRTOS" menu.

Range:

- from 2048 to 65536

Default value:

- 3584

CONFIG_ESP_TIMER_IMPL

Hardware timer to use for esp_timer

Found in: Component config > High resolution timer (esp_timer)

esp_timer APIs can be implemented using different hardware timers.

- "FRC2 (legacy)" implementation has been used in ESP-IDF v2.x - v4.1.
- "LAC timer of Timer Group 0" implementation is simpler, and has smaller run time overhead because software handling of timer overflow is not needed.
- "SYSTIMER" implementation is similar to "LAC timer of Timer Group 0" but for non ESP32 chips.

Available options:

- FRC2 (legacy) timer (ESP_TIMER_IMPL_FRC2)
- LAC timer of Timer Group 0 (ESP_TIMER_IMPL_TG0_LAC)
- SYSTIMER (ESP_TIMER_IMPL_SYSTIMER)

Wi-Fi Contains:

- *CONFIG_ESP32_WIFI_ENABLE_WPA3_SAE*
- *CONFIG_ESP32_WIFI_SOFTAP_BEACON_MAX_LEN*
- *CONFIG_ESP32_WIFI_CACHE_TX_BUFFER_NUM*
- *CONFIG_ESP32_WIFI_DYNAMIC_RX_BUFFER_NUM*
- *CONFIG_ESP32_WIFI_DYNAMIC_TX_BUFFER_NUM*
- *CONFIG_ESP32_WIFI_STATIC_RX_BUFFER_NUM*
- *CONFIG_ESP32_WIFI_STATIC_TX_BUFFER_NUM*
- *CONFIG_ESP_WIFI_STA_DISCONNECTED_PM_ENABLE*
- *CONFIG_ESP32_WIFI_SW_COEXIST_ENABLE*
- *CONFIG_ESP32_WIFI_TX_BUFFER*

- *CONFIG_ESP32_WIFI_AMPDU_RX_ENABLED*
- *CONFIG_ESP32_WIFI_AMPDU_TX_ENABLED*
- *CONFIG_ESP32_WIFI_AMSDU_TX_ENABLED*
- *CONFIG_ESP32_WIFI_CSI_ENABLED*
- *CONFIG_ESP32_WIFI_LOG_DEFAULT_LEVEL*
- *CONFIG_ESP32_WIFI_IRAM_OPT*
- *CONFIG_ESP32_WIFI_MGMT_SBUF_NUM*
- *CONFIG_ESP32_WIFI_NVS_ENABLED*
- *CONFIG_ESP32_WIFI_RX_IRAM_OPT*
- *CONFIG_ESP_WIFI_SLP_BEACON_LOST_OPT*
- *CONFIG_ESP_WIFI_SLP_IRAM_OPT*
- *CONFIG_ESP32_WIFI_TASK_CORE_ID*

CONFIG_ESP32_WIFI_SW_COEXIST_ENABLE

Software controls WiFi/Bluetooth coexistence

Found in: Component config > Wi-Fi

If enabled, WiFi & Bluetooth coexistence is controlled by software rather than hardware. Recommended for heavy traffic scenarios. Both coexistence configuration options are automatically managed, no user intervention is required. If only Bluetooth is used, it is recommended to disable this option to reduce binary file size.

Default value:

- Yes (enabled) if *CONFIG_BT_ENABLED*

CONFIG_ESP32_WIFI_STATIC_RX_BUFFER_NUM

Max number of WiFi static RX buffers

Found in: Component config > Wi-Fi

Set the number of WiFi static RX buffers. Each buffer takes approximately 1.6KB of RAM. The static rx buffers are allocated when esp_wifi_init is called, they are not freed until esp_wifi_deinit is called.

WiFi hardware use these buffers to receive all 802.11 frames. A higher number may allow higher throughput but increases memory use. If ESP32_WIFI_AMPDU_RX_ENABLED is enabled, this value is recommended to set equal or bigger than ESP32_WIFI_RX_BA_WIN in order to achieve better throughput and compatibility with both stations and APs.

Range:

- from 2 to 25

Default value:

- 10 if *CONFIG_SPIRAM_TRY_ALLOCATE_WIFI_LWIP*
- 16 if *CONFIG_SPIRAM_TRY_ALLOCATE_WIFI_LWIP*

CONFIG_ESP32_WIFI_DYNAMIC_RX_BUFFER_NUM

Max number of WiFi dynamic RX buffers

Found in: Component config > Wi-Fi

Set the number of WiFi dynamic RX buffers, 0 means unlimited RX buffers will be allocated (provided sufficient free RAM). The size of each dynamic RX buffer depends on the size of the received data frame.

For each received data frame, the WiFi driver makes a copy to an RX buffer and then delivers it to the high layer TCP/IP stack. The dynamic RX buffer is freed after the higher layer has successfully received the data frame.

For some applications, WiFi data frames may be received faster than the application can process them. In these cases we may run out of memory if RX buffer number is unlimited (0).

If a dynamic RX buffer limit is set, it should be at least the number of static RX buffers.

Range:
- from 0 to 128 if *CONFIG_LWIP_WND_SCALE*
- from 0 to 1024 if *CONFIG_LWIP_WND_SCALE*

Default value:
- 32

CONFIG_ESP32_WIFI_TX_BUFFER

Type of WiFi TX buffers

Found in: Component config > Wi-Fi

Select type of WiFi TX buffers:

If "Static" is selected, WiFi TX buffers are allocated when WiFi is initialized and released when WiFi is de-initialized. The size of each static TX buffer is fixed to about 1.6KB.

If "Dynamic" is selected, each WiFi TX buffer is allocated as needed when a data frame is delivered to the Wifi driver from the TCP/IP stack. The buffer is freed after the data frame has been sent by the WiFi driver. The size of each dynamic TX buffer depends on the length of each data frame sent by the TCP/IP layer.

If PSRAM is enabled, "Static" should be selected to guarantee enough WiFi TX buffers. If PSRAM is disabled, "Dynamic" should be selected to improve the utilization of RAM.

Available options:
- Static (ESP32_WIFI_STATIC_TX_BUFFER)
- Dynamic (ESP32_WIFI_DYNAMIC_TX_BUFFER)

CONFIG_ESP32_WIFI_STATIC_TX_BUFFER_NUM

Max number of WiFi static TX buffers

Found in: Component config > Wi-Fi

Set the number of WiFi static TX buffers. Each buffer takes approximately 1.6KB of RAM. The static RX buffers are allocated when esp_wifi_init() is called, they are not released until esp_wifi_deinit() is called.

For each transmitted data frame from the higher layer TCP/IP stack, the WiFi driver makes a copy of it in a TX buffer. For some applications especially UDP applications, the upper layer can deliver frames faster than WiFi layer can transmit. In these cases, we may run out of TX buffers.

Range:
- from 1 to 64 if ESP32_WIFI_STATIC_TX_BUFFER

Default value:
- 16 if ESP32_WIFI_STATIC_TX_BUFFER

CONFIG_ESP32_WIFI_CACHE_TX_BUFFER_NUM

Max number of WiFi cache TX buffers

Found in: Component config > Wi-Fi

Set the number of WiFi cache TX buffer number.

For each TX packet from uplayer, such as LWIP etc, WiFi driver needs to allocate a static TX buffer and makes a copy of uplayer packet. If WiFi driver fails to allocate the static TX buffer, it caches the uplayer packets to a dedicated buffer queue, this option is used to configure the size of the cached TX queue.

Range:

- from 16 to 128 if *CONFIG_ESP32_SPIRAM_SUPPORT* || ESP32S2_SPIRAM_SUPPORT || ESP32S3_SPIRAM_SUPPORT

Default value:

- 32 if *CONFIG_ESP32_SPIRAM_SUPPORT* || ESP32S2_SPIRAM_SUPPORT || ESP32S3_SPIRAM_SUPPORT

CONFIG_ESP32_WIFI_DYNAMIC_TX_BUFFER_NUM

Max number of WiFi dynamic TX buffers

Found in: Component config > Wi-Fi

Set the number of WiFi dynamic TX buffers. The size of each dynamic TX buffer is not fixed, it depends on the size of each transmitted data frame.

For each transmitted frame from the higher layer TCP/IP stack, the WiFi driver makes a copy of it in a TX buffer. For some applications, especially UDP applications, the upper layer can deliver frames faster than WiFi layer can transmit. In these cases, we may run out of TX buffers.

Range:

- from 1 to 128

Default value:

- 32

CONFIG_ESP32_WIFI_CSI_ENABLED

WiFi CSI(Channel State Information)

Found in: Component config > Wi-Fi

Select this option to enable CSI(Channel State Information) feature. CSI takes about CONFIG_ESP32_WIFI_STATIC_RX_BUFFER_NUM KB of RAM. If CSI is not used, it is better to disable this feature in order to save memory.

Default value:

- No (disabled)

CONFIG_ESP32_WIFI_AMPDU_TX_ENABLED

WiFi AMPDU TX

Found in: Component config > Wi-Fi

Select this option to enable AMPDU TX feature

Default value:

- Yes (enabled)

CONFIG_ESP32_WIFI_TX_BA_WIN

WiFi AMPDU TX BA window size

Found in: Component config > Wi-Fi > CONFIG_ESP32_WIFI_AMPDU_TX_ENABLED

Set the size of WiFi Block Ack TX window. Generally a bigger value means higher throughput but more memory. Most of time we should NOT change the default value unless special reason, e.g. test the maximum UDP TX throughput with iperf etc. For iperf test in shieldbox, the recommended value is 9~12.

Range:

- from 2 to 32

Default value:

- 6

CONFIG_ESP32_WIFI_AMPDU_RX_ENABLED

WiFi AMPDU RX

Found in: Component config > Wi-Fi

Select this option to enable AMPDU RX feature

Default value:

- Yes (enabled)

CONFIG_ESP32_WIFI_RX_BA_WIN

WiFi AMPDU RX BA window size

Found in: Component config > Wi-Fi > CONFIG_ESP32_WIFI_AMPDU_RX_ENABLED

Set the size of WiFi Block Ack RX window. Generally a bigger value means higher throughput and better compatibility but more memory. Most of time we should NOT change the default value unless special reason, e.g. test the maximum UDP RX throughput with iperf etc. For iperf test in shieldbox, the recommended value is 9~12. If PSRAM is used and WiFi memory is prefered to allocat in PSRAM first, the default and minimum value should be 16 to achieve better throughput and compatibility with both stations and APs.

Range:

- from 2 to 32

Default value:

- 6 if *CONFIG_SPIRAM_TRY_ALLOCATE_WIFI_LWIP* && *CONFIG_ESP32_WIFI_AMPDU_RX_ENABLED*
- 16 if *CONFIG_SPIRAM_TRY_ALLOCATE_WIFI_LWIP* && *CONFIG_ESP32_WIFI_AMPDU_RX_ENABLED*

CONFIG_ESP32_WIFI_AMSDU_TX_ENABLED

WiFi AMSDU TX

Found in: Component config > Wi-Fi

Select this option to enable AMSDU TX feature

Default value:

- No (disabled) if *CONFIG_ESP32_SPIRAM_SUPPORT* || ESP32S2_SPIRAM_SUPPORT || ESP32S3_SPIRAM_SUPPORT

CONFIG_ESP32_WIFI_NVS_ENABLED

WiFi NVS flash

Found in: Component config > Wi-Fi

Select this option to enable WiFi NVS flash

Default value:

- Yes (enabled)

CONFIG_ESP32_WIFI_TASK_CORE_ID

WiFi Task Core ID

Found in: Component config > Wi-Fi

Pinned WiFi task to core 0 or core 1.

Available options:

- Core 0 (ESP32_WIFI_TASK_PINNED_TO_CORE_0)

- Core 1 (ESP32_WIFI_TASK_PINNED_TO_CORE_1)

CONFIG_ESP32_WIFI_SOFTAP_BEACON_MAX_LEN

Max length of WiFi SoftAP Beacon

Found in: Component config > Wi-Fi

ESP-MESH utilizes beacon frames to detect and resolve root node conflicts (see documentation). However the default length of a beacon frame can simultaneously hold only five root node identifier structures, meaning that a root node conflict of up to five nodes can be detected at one time. In the occurence of more root nodes conflict involving more than five root nodes, the conflict resolution process will detect five of the root nodes, resolve the conflict, and re-detect more root nodes. This process will repeat until all root node conflicts are resolved. However this process can generally take a very long time.

To counter this situation, the beacon frame length can be increased such that more root nodes can be detected simultaneously. Each additional root node will require 36 bytes and should be added ontop of the default beacon frame length of 752 bytes. For example, if you want to detect 10 root nodes simultaneously, you need to set the beacon frame length as 932 (752+36*5).

Setting a longer beacon length also assists with debugging as the conflicting root nodes can be identified more quickly.

Range:
- from 752 to 1256

Default value:
- 752

CONFIG_ESP32_WIFI_MGMT_SBUF_NUM

WiFi mgmt short buffer number

Found in: Component config > Wi-Fi

Set the number of WiFi management short buffer.

Range:
- from 6 to 32

Default value:
- 32

CONFIG_ESP32_WIFI_LOG_DEFAULT_LEVEL

WiFi default log level

Found in: Component config > Wi-Fi

Specify how much output to see in logs by default. You can set lower verbosity level at runtime using esp_log_level_set function.

Note that this setting limits which log statements are compiled into the program. So setting this to, say, "Warning" would mean that changing log level to "Debug" at runtime will not be possible.

Available options:
- No output (WIFI_LOG_DEFAULT_LEVEL_NONE)
- Error (WIFI_LOG_DEFAULT_LEVEL_ERROR)
- Warning (WIFI_LOG_DEFAULT_LEVEL_WARN)
- Info (WIFI_LOG_DEFAULT_LEVEL_INFO)
- Debug (WIFI_LOG_DEFAULT_LEVEL_DEBUG)
- Verbose (WIFI_LOG_DEFAULT_LEVEL_VERBOSE)

CONFIG_ESP32_WIFI_IRAM_OPT

WiFi IRAM speed optimization

Found in: Component config > Wi-Fi

Select this option to place frequently called Wi-Fi library functions in IRAM. When this option is disabled, more than 10Kbytes of IRAM memory will be saved but Wi-Fi throughput will be reduced.

Default value:

- No (disabled) if *CONFIG_BT_ENABLED* && *CONFIG_ESP32_SPIRAM_SUPPORT*
- Yes (enabled)

CONFIG_ESP32_WIFI_RX_IRAM_OPT

WiFi RX IRAM speed optimization

Found in: Component config > Wi-Fi

Select this option to place frequently called Wi-Fi library RX functions in IRAM. When this option is disabled, more than 17Kbytes of IRAM memory will be saved but Wi-Fi performance will be reduced.

Default value:

- No (disabled) if *CONFIG_BT_ENABLED* && *CONFIG_ESP32_SPIRAM_SUPPORT*
- Yes (enabled)

CONFIG_ESP32_WIFI_ENABLE_WPA3_SAE

Enable WPA3-Personal

Found in: Component config > Wi-Fi

Select this option to allow the device to establish a WPA3-Personal connection with eligible AP' s. PMF (Protected Management Frames) is a prerequisite feature for a WPA3 connection, it needs to be explicitly configured before attempting connection. Please refer to the Wi-Fi Driver API Guide for details.

Default value:

- Yes (enabled)

CONFIG_ESP_WIFI_SLP_IRAM_OPT

WiFi SLP IRAM speed optimization

Found in: Component config > Wi-Fi

Select this option to place called Wi-Fi library TBTT process and receive beacon functions in IRAM. Some functions can be put in IRAM either by ESP32_WIFI_IRAM_OPT and ESP32_WIFI_RX_IRAM_OPT, or this one. If already enabled ESP32_WIFI_IRAM_OPT, the other 7.3KB IRAM memory would be taken by this option. If already enabled ESP32_WIFI_RX_IRAM_OPT, the other 1.3KB IRAM memory would be taken by this option. If neither of them are enabled, the other 7.4KB IRAM memory would be taken by this option. Wi-Fi power-save mode average current would be reduced if this option is enabled.

CONFIG_ESP_WIFI_SLP_DEFAULT_MIN_ACTIVE_TIME

Minimum active time

Found in: Component config > Wi-Fi > CONFIG_ESP_WIFI_SLP_IRAM_OPT

The minimum timeout for waiting to receive data, unit: milliseconds.

Range:

- from 8 to 60 if *CONFIG_ESP_WIFI_SLP_IRAM_OPT*

Default value:

- 50 if *CONFIG_ESP_WIFI_SLP_IRAM_OPT*

CONFIG_ESP_WIFI_SLP_DEFAULT_MAX_ACTIVE_TIME

Maximum keep alive time

Found in: Component config > Wi-Fi > CONFIG_ESP_WIFI_SLP_IRAM_OPT

The maximum time that wifi keep alive, unit: seconds.

Range:
- from 10 to 60 if *CONFIG_ESP_WIFI_SLP_IRAM_OPT*

Default value:
- 10 if *CONFIG_ESP_WIFI_SLP_IRAM_OPT*

CONFIG_ESP_WIFI_STA_DISCONNECTED_PM_ENABLE

Power Management for station at disconnected

Found in: Component config > Wi-Fi

Select this option to enable power_management for station when disconnected. Chip will do modem-sleep when rf module is not in use any more.

CONFIG_ESP_WIFI_SLP_BEACON_LOST_OPT

Wifi sleep optimize when beacon lost

Found in: Component config > Wi-Fi

Enable wifi sleep optimization when beacon loss occurs and immediately enter sleep mode when the WiFi module detects beacon loss.

CONFIG_ESP_WIFI_SLP_BEACON_LOST_TIMEOUT

Beacon loss timeout

Found in: Component config > Wi-Fi > CONFIG_ESP_WIFI_SLP_BEACON_LOST_OPT

Timeout time for close rf phy when beacon loss occurs, Unit: 1024 microsecond.

Range:
- from 5 to 100 if *CONFIG_ESP_WIFI_SLP_BEACON_LOST_OPT*

Default value:
- 10 if *CONFIG_ESP_WIFI_SLP_BEACON_LOST_OPT*

CONFIG_ESP_WIFI_SLP_BEACON_LOST_THRESHOLD

Maximum number of consecutive lost beacons allowed

Found in: Component config > Wi-Fi > CONFIG_ESP_WIFI_SLP_BEACON_LOST_OPT

Maximum number of consecutive lost beacons allowed, WiFi keeps Rx state when the number of consecutive beacons lost is greater than the given threshold.

Range:
- from 0 to 8 if *CONFIG_ESP_WIFI_SLP_BEACON_LOST_OPT*

Default value:
- 3 if *CONFIG_ESP_WIFI_SLP_BEACON_LOST_OPT*

CONFIG_ESP_WIFI_SLP_PHY_ON_DELTA_EARLY_TIME

Delta early time for RF PHY on

Found in: Component config > Wi-Fi > CONFIG_ESP_WIFI_SLP_BEACON_LOST_OPT

Delta early time for rf phy on, When the beacon is lost, the next rf phy on will be earlier the time specified by the configuration item, Unit: 32 microsecond.

Range:
- from 0 to 100 if *CONFIG_ESP_WIFI_SLP_BEACON_LOST_OPT*

Default value:
- 2 if *CONFIG_ESP_WIFI_SLP_BEACON_LOST_OPT*

CONFIG_ESP_WIFI_SLP_PHY_OFF_DELTA_TIMEOUT_TIME

Delta timeout time for RF PHY off

Found in: Component config > Wi-Fi > CONFIG_ESP_WIFI_SLP_BEACON_LOST_OPT

Delta timeout time for rf phy off, When the beacon is lost, the next rf phy off will be delayed for the time specified by the configuration item. Unit: 1024 microsecond.

Range:
- from 0 to 8 if *CONFIG_ESP_WIFI_SLP_BEACON_LOST_OPT*

Default value:
- 2 if *CONFIG_ESP_WIFI_SLP_BEACON_LOST_OPT*

PHY

Contains:

- *CONFIG_ESP_PHY_CALIBRATION_MODE*
- *CONFIG_ESP_PHY_ENABLE_USB*
- *CONFIG_ESP32_PHY_MAX_WIFI_TX_POWER*
- *CONFIG_ESP32_PHY_CALIBRATION_AND_DATA_STORAGE*
- *CONFIG_ESP32_PHY_INIT_DATA_IN_PARTITION*

CONFIG_ESP32_PHY_CALIBRATION_AND_DATA_STORAGE

Store phy calibration data in NVS

Found in: Component config > PHY

If this option is enabled, NVS will be initialized and calibration data will be loaded from there. PHY calibration will be skipped on deep sleep wakeup. If calibration data is not found, full calibration will be performed and stored in NVS. Normally, only partial calibration will be performed. If this option is disabled, full calibration will be performed.

If it’s easy that your board calibrate bad data, choose ‘n’. Two cases for example, you should choose ‘n’: 1.If your board is easy to be booted up with antenna disconnected. 2.Because of your board design, each time when you do calibration, the result are too unstable. If unsure, choose ‘y’.

Default value:
- Yes (enabled)

CONFIG_ESP32_PHY_INIT_DATA_IN_PARTITION

Use a partition to store PHY init data

Found in: Component config > PHY

If enabled, PHY init data will be loaded from a partition. When using a custom partition table, make sure that PHY data partition is included (type: ‘data’, subtype: ‘phy’). With default partition tables, this is done automatically. If PHY init data is stored in a partition, it has to be flashed there, otherwise runtime error will occur.

If this option is not enabled, PHY init data will be embedded into the application binary.

If unsure, choose ‘n’.

Default value:

- No (disabled)

Contains:

- *CONFIG_ESP32_PHY_DEFAULT_INIT_IF_INVALID*
- *CONFIG_ESP32_SUPPORT_MULTIPLE_PHY_INIT_DATA_BIN*

CONFIG_ESP32_PHY_DEFAULT_INIT_IF_INVALID

Reset default PHY init data if invalid

Found in: Component config > PHY > CONFIG_ESP32_PHY_INIT_DATA_IN_PARTITION

If enabled, PHY init data will be restored to default if it cannot be verified successfully to avoid endless bootloops.

If unsure, choose ‘n’.

Default value:

- No (disabled) if *CONFIG_ESP32_PHY_INIT_DATA_IN_PARTITION*

CONFIG_ESP32_SUPPORT_MULTIPLE_PHY_INIT_DATA_BIN

Support multiple PHY init data bin

Found in: Component config > PHY > CONFIG_ESP32_PHY_INIT_DATA_IN_PARTITION

If enabled, the corresponding PHY init data type can be automatically switched according to the country code. China’s PHY init data bin is used by default. Can be modified by country information in API esp_wifi_set_country(). The priority of switching the PHY init data type is: 1. Country configured by API esp_wifi_set_country() and the parameter policy is WIFI_COUNTRY_POLICY_MANUAL. 2. Country notified by the connected AP. 3. Country configured by API esp_wifi_set_country() and the parameter policy is WIFI_COUNTRY_POLICY_AUTO.

Default value:

- No (disabled) if *CONFIG_ESP32_PHY_INIT_DATA_IN_PARTITION* && *CONFIG_ESP32_PHY_INIT_DATA_IN_PARTITION*

CONFIG_ESP32_MULTIPLE_PHY_DATA_BIN_EMBEDDED

Support embedded multiple phy init data bin to app bin

Found in: Component config > PHY > CONFIG_ESP32_PHY_INIT_DATA_IN_PARTITION > CONFIG_ESP32_SUPPORT_MULTIPLE_PHY_INIT_DATA_BIN

If enabled, multiple phy init data bin will embedded into app bin If not enabled, multiple phy init data bin will still leave alone, and need to be flashed by users.

Default value:

- No (disabled) if *CONFIG_ESP32_SUPPORT_MULTIPLE_PHY_INIT_DATA_BIN* && *CONFIG_ESP32_PHY_INIT_DATA_IN_PARTITION*

CONFIG_ESP32_PHY_INIT_DATA_ERROR

Terminate operation when PHY init data error

Found in: Component config > PHY > CONFIG_ESP32_PHY_INIT_DATA_IN_PARTITION > CONFIG_ESP32_SUPPORT_MULTIPLE_PHY_INIT_DATA_BIN

If enabled, when an error occurs while the PHY init data is updated, the program will terminate and restart. If not enabled, the PHY init data will not be updated when an error occurs.

Default value:

- No (disabled) if *CONFIG_ESP32_SUPPORT_MULTIPLE_PHY_INIT_DATA_BIN* && *CONFIG_ESP32_PHY_INIT_DATA_IN_PARTITION*

CONFIG_ESP32_PHY_MAX_WIFI_TX_POWER

Max WiFi TX power (dBm)

Found in: Component config > PHY

Set maximum transmit power for WiFi radio. Actual transmit power for high data rates may be lower than this setting.

Range:

- from 10 to 20

Default value:

- 20

CONFIG_ESP_PHY_ENABLE_USB

Enable USB when phy init

Found in: Component config > PHY

When using USB Serial/JTAG/OTG/CDC, PHY should enable USB, otherwise USB module can not work properly. Notice: Enabling this configuration option will slightly impact wifi performance.

Default value:

- No (disabled) if USB_OTG_SUPPORTED

CONFIG_ESP_PHY_CALIBRATION_MODE

Calibration mode

Found in: Component config > PHY

Select PHY calibration mode. During RF initialization, the partial calibration method is used by default for RF calibration. Full calibration takes about 100ms more than partial calibration. If boot duration is not critical, it is suggested to use the full calibration method. No calibration method is only used when the device wakes up from deep sleep.

Available options:

- Calibration partial (ESP_PHY_RF_CAL_PARTIAL)
- Calibration none (ESP_PHY_RF_CAL_NONE)
- Calibration full (ESP_PHY_RF_CAL_FULL)

Core dump Contains:

- *CONFIG_ESP_COREDUMP_CHECK_BOOT*
- *CONFIG_ESP_COREDUMP_DATA_FORMAT*
- *CONFIG_ESP_COREDUMP_CHECKSUM*
- *CONFIG_ESP_COREDUMP_TO_FLASH_OR_UART*
- *CONFIG_ESP_COREDUMP_UART_DELAY*
- *CONFIG_ESP_COREDUMP_DECODE*
- *CONFIG_ESP_COREDUMP_MAX_TASKS_NUM*

CONFIG_ESP_COREDUMP_TO_FLASH_OR_UART

Data destination

Found in: Component config > Core dump

Select place to store core dump: flash, uart or none (to disable core dumps generation).

Core dumps to Flash are not available if PSRAM is used for task stacks.

If core dump is configured to be stored in flash and custom partition table is used add corresponding entry to your CSV. For examples, please see predefined partition table CSV descriptions in the components/partition_table directory.

Available options:

- Flash (ESP_COREDUMP_ENABLE_TO_FLASH)
- UART (ESP_COREDUMP_ENABLE_TO_UART)
- None (ESP_COREDUMP_ENABLE_TO_NONE)

CONFIG_ESP_COREDUMP_DATA_FORMAT

Core dump data format

Found in: Component config > Core dump

Select the data format for core dump.

Available options:

- Binary format (ESP_COREDUMP_DATA_FORMAT_BIN)
- ELF format (ESP_COREDUMP_DATA_FORMAT_ELF)

CONFIG_ESP_COREDUMP_CHECKSUM

Core dump data integrity check

Found in: Component config > Core dump

Select the integrity check for the core dump.

Available options:

- Use CRC32 for integrity verification (ESP_COREDUMP_CHECKSUM_CRC32)
- Use SHA256 for integrity verification (ESP_COREDUMP_CHECKSUM_SHA256)

CONFIG_ESP_COREDUMP_CHECK_BOOT

Check core dump data integrity on boot

Found in: Component config > Core dump

When enabled, if any data are found on the flash core dump partition, they will be checked by calculating their checksum.

Default value:

- Yes (enabled) if ESP_COREDUMP_ENABLE_TO_FLASH

CONFIG_ESP_COREDUMP_MAX_TASKS_NUM

Maximum number of tasks

Found in: Component config > Core dump

Maximum number of tasks snapshots in core dump.

CONFIG_ESP_COREDUMP_UART_DELAY

Delay before print to UART

Found in: Component config > Core dump

Config delay (in ms) before printing core dump to UART. Delay can be interrupted by pressing Enter key.

Default value:

- 0 if ESP_COREDUMP_ENABLE_TO_UART

CONFIG_ESP_COREDUMP_DECODE

Handling of UART core dumps in IDF Monitor

Found in: Component config > Core dump

Available options:

- Decode and show summary (info_corefile) (ESP_COREDUMP_DECODE_INFO)
- Don’t decode (ESP_COREDUMP_DECODE_DISABLE)

FAT Filesystem support

Contains:

- *CONFIG_FATFS_API_ENCODING*
- *CONFIG_FATFS_USE_FASTSEEK*
- *CONFIG_FATFS_LONG_FILENAMES*
- *CONFIG_FATFS_MAX_LFN*
- *CONFIG_FATFS_FS_LOCK*
- *CONFIG_FATFS_CHOOSE_CODEPAGE*
- *CONFIG_FATFS_ALLOC_PREFER_EXTRAM*
- *CONFIG_FATFS_TIMEOUT_MS*
- *CONFIG_FATFS_PER_FILE_CACHE*

CONFIG_FATFS_CHOOSE_CODEPAGE

OEM Code Page

Found in: Component config > FAT Filesystem support

OEM code page used for file name encodings.

If “Dynamic” is selected, code page can be chosen at runtime using f_setcp function. Note that choosing this option will increase application size by ~480kB.

Available options:

- Dynamic (all code pages supported) (FATFS_CODEPAGE_DYNAMIC)
- US (CP437) (FATFS_CODEPAGE_437)
- Arabic (CP720) (FATFS_CODEPAGE_720)
- Greek (CP737) (FATFS_CODEPAGE_737)
- KBL (CP771) (FATFS_CODEPAGE_771)
- Baltic (CP775) (FATFS_CODEPAGE_775)
- Latin 1 (CP850) (FATFS_CODEPAGE_850)
- Latin 2 (CP852) (FATFS_CODEPAGE_852)
- Cyrillic (CP855) (FATFS_CODEPAGE_855)
- Turkish (CP857) (FATFS_CODEPAGE_857)
- Portugese (CP860) (FATFS_CODEPAGE_860)
- Icelandic (CP861) (FATFS_CODEPAGE_861)
- Hebrew (CP862) (FATFS_CODEPAGE_862)
- Canadian French (CP863) (FATFS_CODEPAGE_863)
- Arabic (CP864) (FATFS_CODEPAGE_864)
- Nordic (CP865) (FATFS_CODEPAGE_865)

- Russian (CP866) (FATFS_CODEPAGE_866)
- Greek 2 (CP869) (FATFS_CODEPAGE_869)
- Japanese (DBCS) (CP932) (FATFS_CODEPAGE_932)
- Simplified Chinese (DBCS) (CP936) (FATFS_CODEPAGE_936)
- Korean (DBCS) (CP949) (FATFS_CODEPAGE_949)
- Traditional Chinese (DBCS) (CP950) (FATFS_CODEPAGE_950)

CONFIG_FATFS_LONG_FILENAMES

Long filename support

Found in: Component config > FAT Filesystem support

Support long filenames in FAT. Long filename data increases memory usage. FATFS can be configured to store the buffer for long filename data in stack or heap.

Available options:

- No long filenames (FATFS_LFN_NONE)
- Long filename buffer in heap (FATFS_LFN_HEAP)
- Long filename buffer on stack (FATFS_LFN_STACK)

CONFIG_FATFS_MAX_LFN

Max long filename length

Found in: Component config > FAT Filesystem support

Maximum long filename length. Can be reduced to save RAM.

Range:

- from 12 to 255

Default value:

- 255

CONFIG_FATFS_API_ENCODING

API character encoding

Found in: Component config > FAT Filesystem support

Choose encoding for character and string arguments/returns when using FATFS APIs. The encoding of arguments will usually depend on text editor settings.

Available options:

- API uses ANSI/OEM encoding (FATFS_API_ENCODING_ANSI_OEM)
- API uses UTF-16 encoding (FATFS_API_ENCODING_UTF_16)
- API uses UTF-8 encoding (FATFS_API_ENCODING_UTF_8)

CONFIG_FATFS_FS_LOCK

Number of simultaneously open files protected by lock function

Found in: Component config > FAT Filesystem support

This option sets the FATFS configuration value _FS_LOCK. The option _FS_LOCK switches file lock function to control duplicated file open and illegal operation to open objects.

* 0: Disable file lock function. To avoid volume corruption, application should avoid illegal open, remove and rename to the open objects.

* >0: Enable file lock function. The value defines how many files/sub-directories can be opened simultaneously under file lock control.

Note that the file lock control is independent of re-entrancy.

Range:
- from 0 to 65535

Default value:
- 0

CONFIG_FATFS_TIMEOUT_MS

Timeout for acquiring a file lock, ms

Found in: Component config > FAT Filesystem support

This option sets FATFS configuration value _FS_TIMEOUT, scaled to milliseconds. Sets the number of milliseconds FATFS will wait to acquire a mutex when operating on an open file. For example, if one task is performing a lenghty operation, another task will wait for the first task to release the lock, and time out after amount of time set by this option.

Default value:
- 10000

CONFIG_FATFS_PER_FILE_CACHE

Use separate cache for each file

Found in: Component config > FAT Filesystem support

This option affects FATFS configuration value _FS_TINY.

If this option is set, _FS_TINY is 0, and each open file has its own cache, size of the cache is equal to the _MAX_SS variable (512 or 4096 bytes). This option uses more RAM if more than 1 file is open, but needs less reads and writes to the storage for some operations.

If this option is not set, _FS_TINY is 1, and single cache is used for all open files, size is also equal to _MAX_SS variable. This reduces the amount of heap used when multiple files are open, but increases the number of read and write operations which FATFS needs to make.

Default value:
- Yes (enabled)

CONFIG_FATFS_ALLOC_PREFER_EXTRAM

Perfer external RAM when allocating FATFS buffers

Found in: Component config > FAT Filesystem support

When the option is enabled, internal buffers used by FATFS will be allocated from external RAM. If the allocation from external RAM fails, the buffer will be allocated from the internal RAM. Disable this option if optimizing for performance. Enable this option if optimizing for internal memory size.

Default value:
- Yes (enabled) if SPIRAM_USE_CAPS_ALLOC || SPIRAM_USE_MALLOC

CONFIG_FATFS_USE_FASTSEEK

Enable fast seek algorithm when using lseek function through VFS FAT

Found in: Component config > FAT Filesystem support

The fast seek feature enables fast backward/long seek operations without FAT access by using an in-memory CLMT (cluster link map table). Please note, fast-seek is only allowed for read-mode files, if a file is opened in write-mode, the seek mechanism will automatically fallback to the default implementation.

Default value:
- No (disabled)

CONFIG_FATFS_FAST_SEEK_BUFFER_SIZE

Fast seek CLMT buffer size

Found in: Component config > FAT Filesystem support > CONFIG_FATFS_USE_FASTSEEK

If fast seek algorithm is enabled, this defines the size of CLMT buffer used by this algorithm in 32-bit word units. This value should be chosen based on prior knowledge of maximum elements of each file entry would store.

Default value:

- 64 if *CONFIG_FATFS_USE_FASTSEEK*

Modbus configuration Contains:

- *CONFIG_FMB_COMM_MODE_ASCII_EN*
- *CONFIG_FMB_COMM_MODE_RTU_EN*
- *CONFIG_FMB_COMM_MODE_TCP_EN*
- *CONFIG_FMB_MASTER_TIMER_GROUP*
- *CONFIG_FMB_MASTER_TIMER_INDEX*
- *CONFIG_FMB_CONTROLLER_NOTIFY_QUEUE_SIZE*
- *CONFIG_FMB_CONTROLLER_NOTIFY_TIMEOUT*
- *CONFIG_FMB_CONTROLLER_SLAVE_ID_SUPPORT*
- *CONFIG_FMB_CONTROLLER_STACK_SIZE*
- *CONFIG_FMB_PORT_TASK_PRIO*
- *CONFIG_FMB_PORT_TASK_STACK_SIZE*
- *CONFIG_FMB_QUEUE_LENGTH*
- *CONFIG_FMB_SERIAL_BUF_SIZE*
- *CONFIG_FMB_EVENT_QUEUE_TIMEOUT*
- *CONFIG_FMB_TIMER_PORT_ENABLED*
- *CONFIG_FMB_PORT_TASK_AFFINITY*
- *CONFIG_FMB_SERIAL_ASCII_BITS_PER_SYMB*
- *CONFIG_FMB_TIMER_ISR_IN_IRAM*
- *CONFIG_FMB_SERIAL_ASCII_TIMEOUT_RESPOND_MS*
- *CONFIG_FMB_MASTER_DELAY_MS_CONVERT*
- *CONFIG_FMB_MASTER_TIMEOUT_MS_RESPOND*
- *CONFIG_FMB_TIMER_GROUP*
- *CONFIG_FMB_TIMER_INDEX*

CONFIG_FMB_COMM_MODE_TCP_EN

Enable Modbus stack support for TCP communication mode

Found in: Component config > Modbus configuration

Enable Modbus TCP option for stack.

Default value:

- Yes (enabled)

CONFIG_FMB_TCP_PORT_DEFAULT

Modbus TCP port number

Found in: Component config > Modbus configuration > CONFIG_FMB_COMM_MODE_TCP_EN

Modbus default port number used by Modbus TCP stack

Range:

- from 0 to 65535

Default value:

- 502

CONFIG_FMB_TCP_PORT_MAX_CONN

Maximum allowed connections for TCP stack

Found in: Component config > Modbus configuration > CONFIG_FMB_COMM_MODE_TCP_EN

Maximum allowed connections number for Modbus TCP stack. This is used by Modbus master and slave port layer to establish connections. This parameter may decrease performance of Modbus stack and can cause increasing of processing time (increase only if absolutely necessary).

Range:
- from 1 to 6

Default value:
- 5

CONFIG_FMB_TCP_CONNECTION_TOUT_SEC

Modbus TCP connection timeout

Found in: Component config > Modbus configuration > CONFIG_FMB_COMM_MODE_TCP_EN

Modbus TCP connection timeout in seconds. Once expired the current connection with the client will be closed and Modbus slave will be waiting for new connection to accept.

Range:
- from 1 to 3600

Default value:
- 20

CONFIG_FMB_COMM_MODE_RTU_EN

Enable Modbus stack support for RTU mode

Found in: Component config > Modbus configuration

Enable RTU Modbus communication mode option for Modbus serial stack.

Default value:
- Yes (enabled)

CONFIG_FMB_COMM_MODE_ASCII_EN

Enable Modbus stack support for ASCII mode

Found in: Component config > Modbus configuration

Enable ASCII Modbus communication mode option for Modbus serial stack.

Default value:
- Yes (enabled)

CONFIG_FMB_MASTER_TIMEOUT_MS_RESPOND

Slave respond timeout (Milliseconds)

Found in: Component config > Modbus configuration

If master sends a frame which is not broadcast, it has to wait sometime for slave response. if slave is not respond in this time, the master will process timeout error.

Range:
- from 50 to 3000

Default value:
- 150

CONFIG_FMB_MASTER_DELAY_MS_CONVERT

Slave conversion delay (Milliseconds)

Found in: Component config > Modbus configuration

If master sends a broadcast frame, it has to wait conversion time to delay, then master can send next frame.

Range:
- from 50 to 400

Default value:
- 200

CONFIG_FMB_QUEUE_LENGTH

Modbus serial task queue length

Found in: Component config > Modbus configuration

Modbus serial driver queue length. It is used by event queue task. See the serial driver API for more information.

Range:
- from 0 to 200

Default value:
- 20

CONFIG_FMB_PORT_TASK_STACK_SIZE

Modbus port task stack size

Found in: Component config > Modbus configuration

Modbus port task stack size for rx/tx event processing. It may be adjusted when debugging is enabled (for example).

Range:
- from 2048 to 8192

Default value:
- 4096

CONFIG_FMB_SERIAL_BUF_SIZE

Modbus serial task RX/TX buffer size

Found in: Component config > Modbus configuration

Modbus serial task RX and TX buffer size for UART driver initialization. This buffer is used for modbus frame transfer. The Modbus protocol maximum frame size is 256 bytes. Bigger size can be used for non standard implementations.

Range:
- from 0 to 2048

Default value:
- 256

CONFIG_FMB_SERIAL_ASCII_BITS_PER_SYMB

Number of data bits per ASCII character

Found in: Component config > Modbus configuration

This option defines the number of data bits per ASCII character.

Range:
- from 7 to 8

Default value:
- 8

CONFIG_FMB_SERIAL_ASCII_TIMEOUT_RESPOND_MS

Response timeout for ASCII communication mode (ms)

Found in: Component config > Modbus configuration

This option defines response timeout of slave in milliseconds for ASCII communication mode. Thus the timeout will expire and allow the master program to handle the error.

Range:
- from 300 to 2000

Default value:
- 1000

CONFIG_FMB_PORT_TASK_PRIO

Modbus port task priority

Found in: Component config > Modbus configuration

Modbus port data processing task priority. The priority of Modbus controller task is equal to (CONFIG_FMB_PORT_TASK_PRIO - 1).

Range:
- from 3 to 23

Default value:
- 10

CONFIG_FMB_PORT_TASK_AFFINITY

Modbus task affinity

Found in: Component config > Modbus configuration

Allows setting the core affinity of the Modbus controller task, i.e. whether the task is pinned to particular CPU, or allowed to run on any CPU.

Available options:
- No affinity (FMB_PORT_TASK_AFFINITY_NO_AFFINITY)
- CPU0 (FMB_PORT_TASK_AFFINITY_CPU0)
- CPU1 (FMB_PORT_TASK_AFFINITY_CPU1)

CONFIG_FMB_CONTROLLER_SLAVE_ID_SUPPORT

Modbus controller slave ID support

Found in: Component config > Modbus configuration

Modbus slave ID support enable. When enabled the Modbus <Report Slave ID> command is supported by stack.

Default value:
- Yes (enabled)

CONFIG_FMB_CONTROLLER_SLAVE_ID

Modbus controller slave ID

Found in: Component config > Modbus configuration > CONFIG_FMB_CONTROLLER_SLAVE_ID_SUPPORT

Modbus slave ID value to identify modbus device in the network using <Report Slave ID> command. Most significant byte of ID is used as short device ID and other three bytes used as long ID.

Range:
- from 0 to 4294967295

Default value:
- "0x00112233"

CONFIG_FMB_CONTROLLER_NOTIFY_TIMEOUT

Modbus controller notification timeout (ms)

Found in: Component config > Modbus configuration

Modbus controller notification timeout in milliseconds. This timeout is used to send notification about accessed parameters.

Range:
- from 0 to 200

Default value:
- 20

CONFIG_FMB_CONTROLLER_NOTIFY_QUEUE_SIZE

Modbus controller notification queue size

Found in: Component config > Modbus configuration

Modbus controller notification queue size. The notification queue is used to get information about accessed parameters.

Range:
- from 0 to 200

Default value:
- 20

CONFIG_FMB_CONTROLLER_STACK_SIZE

Modbus controller stack size

Found in: Component config > Modbus configuration

Modbus controller task stack size. The Stack size may be adjusted when debug mode is used which requires more stack size (for example).

Range:
- from 0 to 8192

Default value:
- 4096

CONFIG_FMB_EVENT_QUEUE_TIMEOUT

Modbus stack event queue timeout (ms)

Found in: Component config > Modbus configuration

Modbus stack event queue timeout in milliseconds. This may help to optimize Modbus stack event processing time.

Range:
- from 0 to 500

Default value:
- 20

CONFIG_FMB_TIMER_PORT_ENABLED

Modbus stack use timer for 3.5T symbol time measurement

Found in: Component config > Modbus configuration

If this option is set the Modbus stack uses timer for T3.5 time measurement. Else the internal UART TOUT timeout is used for 3.5T symbol time measurement.

Default value:
- No (disabled)

CONFIG_FMB_TIMER_GROUP

Slave Timer group number

Found in: Component config > Modbus configuration

Modbus slave Timer group number that is used for timeout measurement.

Range:
- from 0 to 1

Default value:
- 0

CONFIG_FMB_TIMER_INDEX

Slave Timer index in the group

Found in: Component config > Modbus configuration

Modbus slave Timer Index in the group that is used for timeout measurement.

Range:
- from 0 to 1

Default value:
- 0

CONFIG_FMB_MASTER_TIMER_GROUP

Master Timer group number

Found in: Component config > Modbus configuration

Modbus master Timer group number that is used for timeout measurement.

Range:
- from 0 to 1

Default value:
- 0

CONFIG_FMB_MASTER_TIMER_INDEX

Master Timer index

Found in: Component config > Modbus configuration

Modbus master Timer Index in the group that is used for timeout measurement. Note: Modbus master and slave should have different timer index to be able to work simultaneously.

Range:
- from 0 to 1

Default value:
- 0

CONFIG_FMB_TIMER_ISR_IN_IRAM

Place timer interrupt handler into IRAM

Found in: Component config > Modbus configuration

This option places Modbus timer IRQ handler into IRAM. This allows to avoid delays related to processing of non-IRAM-safe interrupts during a flash write operation (NVS updating a value, or some other flash API which has to perform an read/write operation and disable CPU cache). This option has dependency with the UART_ISR_IN_IRAM option which places UART interrupt handler into IRAM to prevent delays related to processing of UART events.

Default value:
- No (disabled)

FreeRTOS

Contains:

- *CONFIG_FREERTOS_FPU_IN_ISR*
- *CONFIG_FREERTOS_CHECK_STACKOVERFLOW*
- *CONFIG_FREERTOS_CHECK_MUTEX_GIVEN_BY_OWNER*
- *CONFIG_FREERTOS_INTERRUPT_BACKTRACE*
- *CONFIG_FREERTOS_OPTIMIZED_SCHEDULER*
- *CONFIG_FREERTOS_GENERATE_RUN_TIME_STATS*
- *CONFIG_FREERTOS_USE_TRACE_FACILITY*
- *CONFIG_FREERTOS_ENABLE_STATIC_TASK_CLEAN_UP*
- *CONFIG_FREERTOS_TASK_FUNCTION_WRAPPER*
- *CONFIG_FREERTOS_ASSERT*
- *CONFIG_FREERTOS_QUEUE_REGISTRY_SIZE*
- *CONFIG_FREERTOS_TIMER_QUEUE_LENGTH*
- *CONFIG_FREERTOS_TIMER_TASK_PRIORITY*
- *CONFIG_FREERTOS_TIMER_TASK_STACK_DEPTH*
- *CONFIG_FREERTOS_ASSERT_ON_UNTESTED_FUNCTION*
- *CONFIG_FREERTOS_IDLE_TASK_STACKSIZE*
- *CONFIG_FREERTOS_ISR_STACKSIZE*
- *CONFIG_FREERTOS_MAX_TASK_NAME_LEN*
- *CONFIG_FREERTOS_THREAD_LOCAL_STORAGE_POINTERS*
- *CONFIG_FREERTOS_PLACE_FUNCTIONS_INTO_FLASH*
- *CONFIG_FREERTOS_UNICORE*
- *CONFIG_FREERTOS_WATCHPOINT_END_OF_STACK*
- *CONFIG_FREERTOS_CHECK_PORT_CRITICAL_COMPLIANCE*
- *CONFIG_FREERTOS_HZ*
- *CONFIG_FREERTOS_USE_TICKLESS_IDLE*
- *CONFIG_FREERTOS_LEGACY_HOOKS*
- *CONFIG_FREERTOS_CORETIMER*

CONFIG_FREERTOS_UNICORE

Run FreeRTOS only on first core

Found in: Component config > FreeRTOS

This version of FreeRTOS normally takes control of all cores of the CPU. Select this if you only want to start it on the first core. This is needed when e.g. another process needs complete control over the second core.

This invisible config value sets the value of tskNO_AFFINITY in task.h. # Intended to be used as a constant from other Kconfig files. # Value is (32-bit) INT_MAX.

CONFIG_FREERTOS_CORETIMER

Xtensa timer to use as the FreeRTOS tick source

Found in: Component config > FreeRTOS

FreeRTOS needs a timer with an associated interrupt to use as the main tick source to increase counters, run timers and do pre-emptive multitasking with. There are multiple timers available to do this, with different interrupt priorities. Check

Available options:

- Timer 0 (int 6, level 1) (FREERTOS_CORETIMER_0)
  Select this to use timer 0
- Timer 1 (int 15, level 3) (FREERTOS_CORETIMER_1)
  Select this to use timer 1

CONFIG_FREERTOS_OPTIMIZED_SCHEDULER

Enable FreeRTOS ṕlatform optimized scheduler

Found in: Component config > FreeRTOS

On most platforms there are instructions can speedup the ready task searching. Enabling this option the FreeRTOS with this instructions support will be built.

Default value:

- Yes (enabled) if *CONFIG_FREERTOS_UNICORE*

CONFIG_FREERTOS_HZ

Tick rate (Hz)

Found in: Component config > FreeRTOS

Select the tick rate at which FreeRTOS does pre-emptive context switching.

Range:

- from 1 to 1000

Default value:

- 100

CONFIG_FREERTOS_ASSERT_ON_UNTESTED_FUNCTION

Halt when an SMP-untested function is called

Found in: Component config > FreeRTOS

Some functions in FreeRTOS have not been thoroughly tested yet when moving to the SMP implementation of FreeRTOS. When this option is enabled, these fuctions will throw an assert().

Default value:

- Yes (enabled)

CONFIG_FREERTOS_CHECK_STACKOVERFLOW

Check for stack overflow

Found in: Component config > FreeRTOS

FreeRTOS can check for stack overflows in threads and trigger an user function called vApplicationStackOverflowHook when this happens.

Available options:

- No checking (FREERTOS_CHECK_STACKOVERFLOW_NONE)
  Do not check for stack overflows (configCHECK_FOR_STACK_OVERFLOW=0)
- Check by stack pointer value (FREERTOS_CHECK_STACKOVERFLOW_PTRVAL)
  Check for stack overflows on each context switch by checking if the stack pointer is in a valid range. Quick but does not detect stack overflows that happened between context switches (configCHECK_FOR_STACK_OVERFLOW=1)
- Check using canary bytes (FREERTOS_CHECK_STACKOVERFLOW_CANARY)
  Places some magic bytes at the end of the stack area and on each context switch, check if these bytes are still intact. More thorough than just checking the pointer, but also slightly slower. (configCHECK_FOR_STACK_OVERFLOW=2)

CONFIG_FREERTOS_WATCHPOINT_END_OF_STACK

Set a debug watchpoint as a stack overflow check

Found in: Component config > FreeRTOS

FreeRTOS can check if a stack has overflown its bounds by checking either the value of the stack pointer or by checking the integrity of canary bytes. (See FREERTOS_CHECK_STACKOVERFLOW for more information.) These checks only happen on a context switch, and the situation that caused the stack overflow may already be long gone by then. This option will use the last debug memory watchpoint to allow breaking into the debugger (or panic'ing) as soon as any of the last 32 bytes on the stack of a task are overwritten. The side effect is that using gdb, you effectively have one hardware watchpoint less because the last one is overwritten as soon as a task switch happens.

Another consequence is that due to alignment requirements of the watchpoint, the usable stack size decreases by up to 60 bytes. This is because the watchpoint region has to be aligned to its size and the size for the stack watchpoint in IDF is 32 bytes.

This check only triggers if the stack overflow writes within 32 bytes near the end of the stack, rather than overshooting further, so it is worth combining this approach with one of the other stack overflow check methods.

When this watchpoint is hit, gdb will stop with a SIGTRAP message. When no JTAG OCD is attached, esp-idf will panic on an unhandled debug exception.

Default value:

- No (disabled)

CONFIG_FREERTOS_INTERRUPT_BACKTRACE

Enable backtrace from interrupt to task context

Found in: Component config > FreeRTOS

If this option is enabled, interrupt stack frame will be modified to point to the code of the interrupted task as its return address. This helps the debugger (or the panic handler) show a backtrace from the interrupt to the task which was interrupted. This also works for nested interrupts: higer level interrupt stack can be traced back to the lower level interrupt. This option adds 4 instructions to the interrupt dispatching code.

Default value:

- Yes (enabled)

CONFIG_FREERTOS_THREAD_LOCAL_STORAGE_POINTERS

Number of thread local storage pointers

Found in: Component config > FreeRTOS

FreeRTOS has the ability to store per-thread pointers in the task control block. This controls the number of pointers available.

This value must be at least 1. Index 0 is reserved for use by the pthreads API thread-local-storage. Other indexes can be used for any desired purpose.

Range:
- from 1 to 256

Default value:
- 1

CONFIG_FREERTOS_ASSERT

FreeRTOS assertions

Found in: Component config > FreeRTOS

Failed FreeRTOS configASSERT() assertions can be configured to behave in different ways.

By default these behave the same as the global project assert settings.

Available options:
- abort() on failed assertions (FREERTOS_ASSERT_FAIL_ABORT)
  If a FreeRTOS configASSERT() fails, FreeRTOS will abort() and halt execution. The panic handler can be configured to handle the outcome of an abort() in different ways.
  If assertions are disabled for the entire project, they are also disabled in FreeRTOS and this option is unavailable.
- Print and continue failed assertions (FREERTOS_ASSERT_FAIL_PRINT_CONTINUE)
  If a FreeRTOS assertion fails, print it out and continue.
- Disable FreeRTOS assertions (FREERTOS_ASSERT_DISABLE)
  FreeRTOS configASSERT() will not be compiled into the binary.

CONFIG_FREERTOS_IDLE_TASK_STACKSIZE

Idle Task stack size

Found in: Component config > FreeRTOS

The idle task has its own stack, sized in bytes. The default size is enough for most uses. Size can be reduced to 768 bytes if no (or simple) FreeRTOS idle hooks are used and pthread local storage or FreeRTOS local storage cleanup callbacks are not used.

The stack size may need to be increased above the default if the app installs idle or thread local storage cleanup hooks that use a lot of stack memory.

Range:
- from 768 to 32768

Default value:
- 2304

CONFIG_FREERTOS_ISR_STACKSIZE

ISR stack size

Found in: Component config > FreeRTOS

The interrupt handlers have their own stack. The size of the stack can be defined here. Each processor has its own stack, so the total size occupied will be twice this.

Range:
- from 2096 to 32768 if ESP_COREDUMP_DATA_FORMAT_ELF
- from 1536 to 32768

Default value:
- 2096 if ESP_COREDUMP_DATA_FORMAT_ELF
- 1536

CONFIG_FREERTOS_LEGACY_HOOKS

Use FreeRTOS legacy hooks

Found in: Component config > FreeRTOS

FreeRTOS offers a number of hooks/callback functions that are called when a timer tick happens, the idle thread runs etc. esp-idf replaces these by runtime registerable hooks using the esp_register_freertos_xxx_hook system, but for legacy reasons the old hooks can also still be enabled. Please enable this only if you have code that for some reason can't be migrated to the esp_register_freertos_xxx_hook system.

Default value:

- No (disabled)

CONFIG_FREERTOS_MAX_TASK_NAME_LEN

Maximum task name length

Found in: Component config > FreeRTOS

Changes the maximum task name length. Each task allocated will include this many bytes for a task name. Using a shorter value saves a small amount of RAM, a longer value allows more complex names.

For most uses, the default of 16 is OK.

Range:

- from 1 to 256

Default value:

- 16

CONFIG_FREERTOS_ENABLE_STATIC_TASK_CLEAN_UP

Enable static task clean up hook

Found in: Component config > FreeRTOS

Enable this option to make FreeRTOS call the static task clean up hook when a task is deleted.

Bear in mind that if this option is enabled you will need to implement the following function:

```
void vPortCleanUpTCB ( void \*pxTCB ) {
    // place clean up code here
}
```

Default value:

- No (disabled)

CONFIG_FREERTOS_TIMER_TASK_PRIORITY

FreeRTOS timer task priority

Found in: Component config > FreeRTOS

The timer service task (primarily) makes use of existing FreeRTOS features, allowing timer functionality to be added to an application with minimal impact on the size of the application's executable binary.

Use this constant to define the priority that the timer task will run at.

Range:

- from 1 to 25

Default value:

- 1

CONFIG_FREERTOS_TIMER_TASK_STACK_DEPTH

FreeRTOS timer task stack size

Found in: Component config > FreeRTOS

The timer service task (primarily) makes use of existing FreeRTOS features, allowing timer functionality to be added to an application with minimal impact on the size of the application ' s executable binary.

Use this constant to define the size (in bytes) of the stack allocated for the timer task.

Range:
- from 1536 to 32768

Default value:
- 2048

CONFIG_FREERTOS_TIMER_QUEUE_LENGTH

FreeRTOS timer queue length

Found in: Component config > FreeRTOS

FreeRTOS provides a set of timer related API functions. Many of these functions use a standard FreeRTOS queue to send commands to the timer service task. The queue used for this purpose is called the 'timer command queue'. The 'timer command queue' is private to the FreeRTOS timer implementation, and cannot be accessed directly.

For most uses the default value of 10 is OK.

Range:
- from 5 to 20

Default value:
- 10

CONFIG_FREERTOS_QUEUE_REGISTRY_SIZE

FreeRTOS queue registry size

Found in: Component config > FreeRTOS

FreeRTOS uses the queue registry as a means for kernel aware debuggers to locate queues, semaphores, and mutexes. The registry allows for a textual name to be associated with a queue for easy identification within a debugging GUI. A value of 0 will disable queue registry functionality, and a value larger than 0 will specify the number of queues/semaphores/mutexes that the registry can hold.

Range:
- from 0 to 20

Default value:
- 0

CONFIG_FREERTOS_USE_TRACE_FACILITY

Enable FreeRTOS trace facility

Found in: Component config > FreeRTOS

If enabled, configUSE_TRACE_FACILITY will be defined as 1 in FreeRTOS. This will allow the usage of trace facility functions such as uxTaskGetSystemState().

Default value:
- No (disabled)

CONFIG_FREERTOS_USE_STATS_FORMATTING_FUNCTIONS

Enable FreeRTOS stats formatting functions

Found in: Component config > FreeRTOS > CONFIG_FREERTOS_USE_TRACE_FACILITY

If enabled, configUSE_STATS_FORMATTING_FUNCTIONS will be defined as 1 in FreeRTOS. This will allow the usage of stats formatting functions such as vTaskList().

Default value:

- No (disabled) if *CONFIG_FREERTOS_USE_TRACE_FACILITY*

CONFIG_FREERTOS_VTASKLIST_INCLUDE_COREID

Enable display of xCoreID in vTaskList

Found in: Component config > FreeRTOS > CONFIG_FREERTOS_USE_TRACE_FACILITY > CONFIG_FREERTOS_USE_STATS_FORMATTING_FUNCTIONS

If enabled, this will include an extra column when vTaskList is called to display the CoreID the task is pinned to (0,1) or -1 if not pinned.

Default value:

- No (disabled) if *CONFIG_FREERTOS_USE_STATS_FORMATTING_FUNCTIONS*

CONFIG_FREERTOS_GENERATE_RUN_TIME_STATS

Enable FreeRTOS to collect run time stats

Found in: Component config > FreeRTOS

If enabled, configGENERATE_RUN_TIME_STATS will be defined as 1 in FreeRTOS. This will allow FreeRTOS to collect information regarding the usage of processor time amongst FreeRTOS tasks. Run time stats are generated using either the ESP Timer or the CPU Clock as the clock source (Note that run time stats are only valid until the clock source overflows). The function vTaskGetRunTimeStats() will also be available if FREERTOS_USE_STATS_FORMATTING_FUNCTIONS and FREERTOS_USE_TRACE_FACILITY are enabled. vTaskGetRunTimeStats() will display the run time of each task as a % of the total run time of all CPUs (task run time / no of CPUs) / (total run time / 100)

Default value:

- No (disabled)

CONFIG_FREERTOS_RUN_TIME_STATS_CLK

Choose the clock source for run time stats

Found in: Component config > FreeRTOS > CONFIG_FREERTOS_GENERATE_RUN_TIME_STATS

Choose the clock source for FreeRTOS run time stats. Options are CPU0’s CPU Clock or the ESP Timer. Both clock sources are 32 bits. The CPU Clock can run at a higher frequency hence provide a finer resolution but will overflow much quicker. Note that run time stats are only valid until the clock source overflows.

Available options:

- Use ESP TIMER for run time stats (FREERTOS_RUN_TIME_STATS_USING_ESP_TIMER)
  ESP Timer will be used as the clock source for FreeRTOS run time stats. The ESP Timer runs at a frequency of 1MHz regardless of Dynamic Frequency Scaling. Therefore the ESP Timer will overflow in approximately 4290 seconds.
- Use CPU Clock for run time stats (FREERTOS_RUN_TIME_STATS_USING_CPU_CLK)
  CPU Clock will be used as the clock source for the generation of run time stats. The CPU Clock has a frequency dependent on ESP32_DEFAULT_CPU_FREQ_MHZ and Dynamic Frequency Scaling (DFS). Therefore the CPU Clock frequency can fluctuate between 80 to 240MHz. Run time stats generated using the CPU Clock represents the number of CPU cycles each task is allocated and DOES NOT reflect the amount of time each task runs for

(as CPU clock frequency can change). If the CPU clock consistently runs at the maximum frequency of 240MHz, it will overflow in approximately 17 seconds.

CONFIG_FREERTOS_USE_TICKLESS_IDLE

Tickless idle support

Found in: Component config > FreeRTOS

If power management support is enabled, FreeRTOS will be able to put the system into light sleep mode when no tasks need to run for a number of ticks. This number can be set using FREERTOS_IDLE_TIME_BEFORE_SLEEP option. This feature is also known as "automatic light sleep" .

Note that timers created using esp_timer APIs may prevent the system from entering sleep mode, even when no tasks need to run.

If disabled, automatic light sleep support will be disabled.

Default value:

- No (disabled) if *CONFIG_PM_ENABLE*

CONFIG_FREERTOS_IDLE_TIME_BEFORE_SLEEP

Minimum number of ticks to enter sleep mode for

Found in: Component config > FreeRTOS > CONFIG_FREERTOS_USE_TICKLESS_IDLE

FreeRTOS will enter light sleep mode if no tasks need to run for this number of ticks.

Range:

- from 2 to 4294967295 if *CONFIG_FREERTOS_USE_TICKLESS_IDLE*

Default value:

- 3 if *CONFIG_FREERTOS_USE_TICKLESS_IDLE*

CONFIG_FREERTOS_TASK_FUNCTION_WRAPPER

Enclose all task functions in a wrapper function

Found in: Component config > FreeRTOS

If enabled, all FreeRTOS task functions will be enclosed in a wrapper function. If a task function mistakenly returns (i.e. does not delete), the call flow will return to the wrapper function. The wrapper function will then log an error and abort the application. This option is also required for GDB backtraces and C++ exceptions to work correctly inside top-level task functions.

Default value:

- Yes (enabled)

CONFIG_FREERTOS_CHECK_MUTEX_GIVEN_BY_OWNER

Check that mutex semaphore is given by owner task

Found in: Component config > FreeRTOS

If enabled, assert that when a mutex semaphore is given, the task giving the semaphore is the task which is currently holding the mutex.

Default value:

- Yes (enabled)

CONFIG_FREERTOS_CHECK_PORT_CRITICAL_COMPLIANCE

Tests compliance with Vanilla FreeRTOS port*_CRITICAL calls

Found in: Component config > FreeRTOS

If enabled, context of port*_CRITICAL calls (ISR or Non-ISR) would be checked to be in compliance with Vanilla FreeRTOS. e.g Calling port*_CRITICAL from ISR context would cause assert failure

Default value:

- No (disabled)

CONFIG_FREERTOS_PLACE_FUNCTIONS_INTO_FLASH

Place FreeRTOS functions into Flash

Found in: Component config > FreeRTOS

When enabled the selected Non-ISR FreeRTOS functions will be placed into Flash memory instead of IRAM. This saves up to 8KB of IRAM depending on which functions are used.

Default value:

- No (disabled)

CONFIG_FREERTOS_FPU_IN_ISR

Allow use of float inside Level 1 ISR (EXPERIMENTAL)

Found in: Component config > FreeRTOS

When enabled, the usage of float type is allowed inside Level 1 ISRs.

Default value:

- No (disabled)

Heap memory debugging

Contains:

- *CONFIG_HEAP_ABORT_WHEN_ALLOCATION_FAILS*
- *CONFIG_HEAP_TASK_TRACKING*
- *CONFIG_HEAP_CORRUPTION_DETECTION*
- *CONFIG_HEAP_TRACING_DEST*
- *CONFIG_HEAP_TRACING_STACK_DEPTH*

CONFIG_HEAP_CORRUPTION_DETECTION

Heap corruption detection

Found in: Component config > Heap memory debugging

Enable heap poisoning features to detect heap corruption caused by out-of-bounds access to heap memory.

See the “Heap Memory Debugging” page of the IDF documentation for a description of each level of heap corruption detection.

Available options:

- Basic (no poisoning) (HEAP_POISONING_DISABLED)
- Light impact (HEAP_POISONING_LIGHT)
- Comprehensive (HEAP_POISONING_COMPREHENSIVE)

CONFIG_HEAP_TRACING_DEST

Heap tracing

Found in: Component config > Heap memory debugging

Enables the heap tracing API defined in esp_heap_trace.h.

This function causes a moderate increase in IRAM code side and a minor increase in heap function (malloc/free/realloc) CPU overhead, even when the tracing feature is not used. So it's best to keep it disabled unless tracing is being used.

Available options:

- Disabled (HEAP_TRACING_OFF)
- Standalone (HEAP_TRACING_STANDALONE)
- Host-based (HEAP_TRACING_TOHOST)

CONFIG_HEAP_TRACING_STACK_DEPTH

Heap tracing stack depth

Found in: Component config > Heap memory debugging

Number of stack frames to save when tracing heap operation callers.

More stack frames uses more memory in the heap trace buffer (and slows down allocation), but can provide useful information.

CONFIG_HEAP_TASK_TRACKING

Enable heap task tracking

Found in: Component config > Heap memory debugging

Enables tracking the task responsible for each heap allocation.

This function depends on heap poisoning being enabled and adds four more bytes of overhead for each block allocated.

CONFIG_HEAP_ABORT_WHEN_ALLOCATION_FAILS

Abort if memory allocation fails

Found in: Component config > Heap memory debugging

When enabled, if a memory allocation operation fails it will cause a system abort.

Default value:

- No (disabled)

jsmn Contains:

- *CONFIG_JSMN_PARENT_LINKS*
- *CONFIG_JSMN_STRICT*

CONFIG_JSMN_PARENT_LINKS

Enable parent links

Found in: Component config > jsmn

You can access to parent node of parsed json

Default value:

- No (disabled)

CONFIG_JSMN_STRICT

Enable strict mode

Found in: Component config > jsmn

In strict mode primitives are: numbers and booleans

Default value:

- No (disabled)

libsodium Contains:

- *CONFIG_LIBSODIUM_USE_MBEDTLS_SHA*

CONFIG_LIBSODIUM_USE_MBEDTLS_SHA

Use mbedTLS SHA256 & SHA512 implementations

Found in: Component config > libsodium

If this option is enabled, libsodium will use thin wrappers around mbedTLS for SHA256 & SHA512 operations.

This saves some code size if mbedTLS is also used. However it is incompatible with hardware SHA acceleration (due to the way libsodium's API manages SHA state).

Default value:

- Yes (enabled)

Log output Contains:

- *CONFIG_LOG_DEFAULT_LEVEL*
- *CONFIG_LOG_TIMESTAMP_SOURCE*
- *CONFIG_LOG_COLORS*

CONFIG_LOG_DEFAULT_LEVEL

Default log verbosity

Found in: Component config > Log output

Specify how much output to see in logs by default. You can set lower verbosity level at runtime using esp_log_level_set function.

Note that this setting limits which log statements are compiled into the program. So setting this to, say, "Warning" would mean that changing log level to "Debug" at runtime will not be possible.

Available options:

- No output (LOG_DEFAULT_LEVEL_NONE)
- Error (LOG_DEFAULT_LEVEL_ERROR)
- Warning (LOG_DEFAULT_LEVEL_WARN)
- Info (LOG_DEFAULT_LEVEL_INFO)
- Debug (LOG_DEFAULT_LEVEL_DEBUG)
- Verbose (LOG_DEFAULT_LEVEL_VERBOSE)

CONFIG_LOG_COLORS

Use ANSI terminal colors in log output

Found in: Component config > Log output

Enable ANSI terminal color codes in bootloader output.

In order to view these, your terminal program must support ANSI color codes.

Default value:

- Yes (enabled)

CONFIG_LOG_TIMESTAMP_SOURCE

Log Timestamps

Found in: Component config > Log output

Choose what sort of timestamp is displayed in the log output:

- Milliseconds since boot is calulated from the RTOS tick count multiplied by the tick period. This time will reset after a software reboot. e.g. (90000)
- System time is taken from POSIX time functions which use the ESP32's RTC and FRC1 timers to maintain an accurate time. The system time is initialized to 0 on startup, it can be set with an SNTP sync, or with POSIX time functions. This time will not reset after a software reboot. e.g. (00:01:30.000)
- NOTE: Currently this will not get used in logging from binary blobs (i.e WiFi & Bluetooth libraries), these will always print milliseconds since boot.

Available options:

- Milliseconds Since Boot (LOG_TIMESTAMP_SOURCE_RTOS)
- System Time (LOG_TIMESTAMP_SOURCE_SYSTEM)

LWIP

Contains:

- *Checksums*
- *CONFIG_LWIP_DHCP_COARSE_TIMER_SECS*
- *DHCP server*
- *CONFIG_LWIP_DHCP_DISABLE_CLIENT_ID*
- *CONFIG_LWIP_DHCP_DOES_ARP_CHECK*
- *CONFIG_LWIP_DHCP_RESTORE_LAST_IP*
- *CONFIG_LWIP_PPP_CHAP_SUPPORT*
- *CONFIG_LWIP_L2_TO_L3_COPY*
- *CONFIG_LWIP_IP4_FRAG*
- *CONFIG_LWIP_IP6_FRAG*
- *CONFIG_LWIP_IP_FORWARD*
- *CONFIG_LWIP_NETBUF_RECVINFO*
- *CONFIG_LWIP_AUTOIP*
- *CONFIG_LWIP_IPV6*
- *CONFIG_LWIP_ETHARP_TRUST_IP_MAC*
- *CONFIG_LWIP_ESP_LWIP_ASSERT*
- *CONFIG_LWIP_DEBUG*
- *CONFIG_LWIP_IRAM_OPTIMIZATION*
- *CONFIG_LWIP_STATS*
- *CONFIG_LWIP_TIMERS_ONDEMAND*
- *CONFIG_LWIP_DNS_SUPPORT_MDNS_QUERIES*
- *CONFIG_LWIP_PPP_MPPE_SUPPORT*
- *CONFIG_LWIP_PPP_MSCHAP_SUPPORT*
- *CONFIG_LWIP_PPP_NOTIFY_PHASE_SUPPORT*
- *CONFIG_LWIP_PPP_PAP_SUPPORT*
- *CONFIG_LWIP_PPP_DEBUG_ON*
- *CONFIG_LWIP_PPP_SUPPORT*
- *CONFIG_LWIP_IP4_REASSEMBLY*
- *CONFIG_LWIP_IP6_REASSEMBLY*
- *CONFIG_LWIP_SLIP_SUPPORT*
- *CONFIG_LWIP_SO_LINGER*
- *CONFIG_LWIP_SO_RCVBUF*
- *CONFIG_LWIP_SO_REUSE*
- *Hooks*

- *ICMP*
- *CONFIG_LWIP_LOCAL_HOSTNAME*
- *LWIP RAW API*
- *CONFIG_LWIP_IPV6_ND6_NUM_NEIGHBORS*
- *CONFIG_LWIP_IPV6_MEMP_NUM_ND6_QUEUE*
- *CONFIG_LWIP_MAX_SOCKETS*
- *CONFIG_LWIP_ESP_GRATUITOUS_ARP*
- *CONFIG_LWIP_ESP_MLDV6_REPORT*
- *SNTP*
- *CONFIG_LWIP_USE_ONLY_LWIP_SELECT*
- *CONFIG_LWIP_NETIF_LOOPBACK*
- *TCP*
- *CONFIG_LWIP_TCPIP_TASK_AFFINITY*
- *CONFIG_LWIP_TCPIP_TASK_STACK_SIZE*
- *CONFIG_LWIP_TCPIP_RECVMBOX_SIZE*
- *UDP*

CONFIG_LWIP_LOCAL_HOSTNAME

Local netif hostname

Found in: Component config > LWIP

The default name this device will report to other devices on the network. Could be updated at runtime with esp_netif_set_hostname()

Default value:

- “espressif”

CONFIG_LWIP_DNS_SUPPORT_MDNS_QUERIES

Enable mDNS queries in resolving host name

Found in: Component config > LWIP

If this feature is enabled, standard API such as gethostbyname support .local addresses by sending one shot multicast mDNS query

Default value:

- Yes (enabled)

CONFIG_LWIP_L2_TO_L3_COPY

Enable copy between Layer2 and Layer3 packets

Found in: Component config > LWIP

If this feature is enabled, all traffic from layer2(WIFI Driver) will be copied to a new buffer before sending it to layer3(LWIP stack), freeing the layer2 buffer. Please be notified that the total layer2 receiving buffer is fixed and ESP32 currently supports 25 layer2 receiving buffer, when layer2 buffer runs out of memory, then the incoming packets will be dropped in hardware. The layer3 buffer is allocated from the heap, so the total layer3 receiving buffer depends on the available heap size, when heap runs out of memory, no copy will be sent to layer3 and packet will be dropped in layer2. Please make sure you fully understand the impact of this feature before enabling it.

Default value:

- No (disabled)

CONFIG_LWIP_IRAM_OPTIMIZATION

Enable LWIP IRAM optimization

Found in: Component config > LWIP

If this feature is enabled, some functions relating to RX/TX in LWIP will be put into IRAM, it can improve UDP/TCP throughput by >10% for single core mode, it doesn't help too much for dual core mode. On the other hand, it needs about 10KB IRAM for these optimizations.

If this feature is disabled, all lwip functions will be put into FLASH.

Default value:

- No (disabled)

CONFIG_LWIP_TIMERS_ONDEMAND

Enable LWIP Timers on demand

Found in: Component config > LWIP

If this feature is enabled, IGMP and MLD6 timers will be activated only when joining groups or receiving QUERY packets.

This feature will reduce the power consumption for applications which do not use IGMP and MLD6.

Default value:

- Yes (enabled)

CONFIG_LWIP_MAX_SOCKETS

Max number of open sockets

Found in: Component config > LWIP

Sockets take up a certain amount of memory, and allowing fewer sockets to be open at the same time conserves memory. Specify the maximum amount of sockets here. The valid value is from 1 to 16.

Range:

- from 1 to 16

Default value:

- 10

CONFIG_LWIP_USE_ONLY_LWIP_SELECT

Support LWIP socket select() only (DEPRECATED)

Found in: Component config > LWIP

This option is deprecated. Use VFS_SUPPORT_SELECT instead, which is the inverse of this option.

The virtual filesystem layer of select() redirects sockets to lwip_select() and non-socket file descriptors to their respective driver implementations. If this option is enabled then all calls of select() will be redirected to lwip_select(), therefore, select can be used for sockets only.

Default value:

- No (disabled)

CONFIG_LWIP_SO_LINGER

Enable SO_LINGER processing

Found in: Component config > LWIP

Enabling this option allows SO_LINGER processing. l_onoff = 1,l_linger can set the timeout.

If l_linger=0, When a connection is closed, TCP will terminate the connection. This means that TCP will discard any data packets stored in the socket send buffer and send an RST to the peer.

If l_linger!=0,Then closesocket() calls to block the process until the remaining data packets has been sent or timed out.

Default value:

- No (disabled)

CONFIG_LWIP_SO_REUSE

Enable SO_REUSEADDR option

Found in: Component config > LWIP

Enabling this option allows binding to a port which remains in TIME_WAIT.

Default value:

- Yes (enabled)

CONFIG_LWIP_SO_REUSE_RXTOALL

SO_REUSEADDR copies broadcast/multicast to all matches

Found in: Component config > LWIP > CONFIG_LWIP_SO_REUSE

Enabling this option means that any incoming broadcast or multicast packet will be copied to all of the local sockets that it matches (may be more than one if SO_REUSEADDR is set on the socket.)

This increases memory overhead as the packets need to be copied, however they are only copied per matching socket. You can safely disable it if you don't plan to receive broadcast or multicast traffic on more than one socket at a time.

Default value:

- Yes (enabled)

CONFIG_LWIP_SO_RCVBUF

Enable SO_RCVBUF option

Found in: Component config > LWIP

Enabling this option allows checking for available data on a netconn.

Default value:

- No (disabled)

CONFIG_LWIP_NETBUF_RECVINFO

Enable IP_PKTINFO option

Found in: Component config > LWIP

Enabling this option allows checking for the destination address of a received IPv4 Packet.

Default value:

- No (disabled)

CONFIG_LWIP_IP4_FRAG

Enable fragment outgoing IP4 packets

Found in: Component config > LWIP

Enabling this option allows fragmenting outgoing IP4 packets if their size exceeds MTU.

Default value:

- Yes (enabled)

CONFIG_LWIP_IP6_FRAG

Enable fragment outgoing IP6 packets

Found in: Component config > LWIP

Enabling this option allows fragmenting outgoing IP6 packets if their size exceeds MTU.

Default value:

- Yes (enabled)

CONFIG_LWIP_IP4_REASSEMBLY

Enable reassembly incoming fragmented IP4 packets

Found in: Component config > LWIP

Enabling this option allows reassemblying incoming fragmented IP4 packets.

Default value:

- No (disabled)

CONFIG_LWIP_IP6_REASSEMBLY

Enable reassembly incoming fragmented IP6 packets

Found in: Component config > LWIP

Enabling this option allows reassemblying incoming fragmented IP6 packets.

Default value:

- No (disabled)

CONFIG_LWIP_IP_FORWARD

Enable IP forwarding

Found in: Component config > LWIP

Enabling this option allows packets forwarding across multiple interfaces.

Default value:

- No (disabled)

CONFIG_LWIP_IPV4_NAPT

Enable NAT (new/experimental)

Found in: Component config > LWIP > CONFIG_LWIP_IP_FORWARD

Enabling this option allows Network Address and Port Translation.

Default value:

- No (disabled) if *CONFIG_LWIP_IP_FORWARD*

CONFIG_LWIP_STATS

Enable LWIP statistics

Found in: Component config > LWIP

Enabling this option allows LWIP statistics

Default value:

- No (disabled)

CONFIG_LWIP_ETHARP_TRUST_IP_MAC

Enable LWIP ARP trust

Found in: Component config > LWIP

Enabling this option allows ARP table to be updated.

If this option is enabled, the incoming IP packets cause the ARP table to be updated with the source MAC and IP addresses supplied in the packet. You may want to disable this if you do not trust LAN peers to have the correct addresses, or as a limited approach to attempt to handle spoofing. If disabled, lwIP will need to make a new ARP request if the peer is not already in the ARP table, adding a little latency. The peer *is* in the ARP table if it requested our address before. Also notice that this slows down input processing of every IP packet!

There are two known issues in real application if this feature is enabled: - The LAN peer may have bug to update the ARP table after the ARP entry is aged out. If the ARP entry on the LAN peer is aged out but failed to be updated, all IP packets sent from LWIP to the LAN peer will be dropped by LAN peer. - The LAN peer may not be trustful, the LAN peer may send IP packets to LWIP with two different MACs, but the same IP address. If this happens, the LWIP has problem to receive IP packets from LAN peer.

So the recommendation is to disable this option. Here the LAN peer means the other side to which the ESP station or soft-AP is connected.

Default value:

- No (disabled)

CONFIG_LWIP_ESP_GRATUITOUS_ARP

Send gratuitous ARP periodically

Found in: Component config > LWIP

Enable this option allows to send gratuitous ARP periodically.

This option solve the compatibility issues.If the ARP table of the AP is old, and the AP doesn't send ARP request to update it's ARP table, this will lead to the STA sending IP packet fail. Thus we send gratuitous ARP periodically to let AP update it's ARP table.

Default value:

- Yes (enabled)

CONFIG_LWIP_GARP_TMR_INTERVAL

GARP timer interval(seconds)

Found in: Component config > LWIP > CONFIG_LWIP_ESP_GRATUITOUS_ARP

Set the timer interval for gratuitous ARP. The default value is 60s

Default value:

- 60

CONFIG_LWIP_ESP_MLDV6_REPORT

Send mldv6 report periodically

Found in: Component config > LWIP

Enable this option allows to send mldv6 report periodically.

This option solve the issue that failed to receive multicast data. Some routers fail to forward multicast packets. To solve this problem, send multicast mdlv6 report to routers regularly.

Default value:

- Yes (enabled)

CONFIG_LWIP_MLDV6_TMR_INTERVAL

mldv6 report timer interval(seconds)

Found in: Component config > LWIP > CONFIG_LWIP_ESP_MLDV6_REPORT

Set the timer interval for mldv6 report. The default value is 40s

Default value:

- 40

CONFIG_LWIP_TCPIP_RECVMBOX_SIZE

TCPIP task receive mail box size

Found in: Component config > LWIP

Set TCPIP task receive mail box size. Generally bigger value means higher throughput but more memory. The value should be bigger than UDP/TCP mail box size.

Range:

- from 6 to 64 if *CONFIG_LWIP_WND_SCALE*
- from 6 to 1024 if *CONFIG_LWIP_WND_SCALE*

Default value:

- 32

CONFIG_LWIP_DHCP_DOES_ARP_CHECK

DHCP: Perform ARP check on any offered address

Found in: Component config > LWIP

Enabling this option performs a check (via ARP request) if the offered IP address is not already in use by another host on the network.

Default value:

- Yes (enabled)

CONFIG_LWIP_DHCP_DISABLE_CLIENT_ID

DHCP: Disable Use of HW address as client identification

Found in: Component config > LWIP

This option could be used to disable DHCP client identification with its MAC address. (Client id is used by DHCP servers to uniquely identify clients and are included in the DHCP packets as an option 61) Set this option to “y” in order to exclude option 61 from DHCP packets.

Default value:

- No (disabled)

CONFIG_LWIP_DHCP_RESTORE_LAST_IP

DHCP: Restore last IP obtained from DHCP server

Found in: Component config > LWIP

When this option is enabled, DHCP client tries to re-obtain last valid IP address obtained from DHCP server. Last valid DHCP configuration is stored in nvs and restored after reset/power-up. If IP is still available, there is no need for sending discovery message to DHCP server and save some time.

Default value:

- No (disabled)

CONFIG_LWIP_DHCP_COARSE_TIMER_SECS

DHCP coarse timer interval(s)

Found in: Component config > LWIP

Set DHCP coarse interval in seconds. A higher value will be less precise but cost less power consumption.

Range:
- from 1 to 10

Default value:
- 1

DHCP server Contains:

- *CONFIG_LWIP_DHCPS*

CONFIG_LWIP_DHCPS

DHCPS: Enable IPv4 Dynamic Host Configuration Protocol Server (DHCPS)

Found in: Component config > LWIP > DHCP server

Enabling this option allows the device to run the DHCP server (to dynamically assign IPv4 addresses to clients).

Default value:
- Yes (enabled)

CONFIG_LWIP_DHCPS_LEASE_UNIT

Multiplier for lease time, in seconds

Found in: Component config > LWIP > DHCP server > CONFIG_LWIP_DHCPS

The DHCP server is calculating lease time multiplying the sent and received times by this number of seconds per unit. The default is 60, that equals one minute.

Range:
- from 1 to 3600

Default value:
- 60

CONFIG_LWIP_DHCPS_MAX_STATION_NUM

Maximum number of stations

Found in: Component config > LWIP > DHCP server > CONFIG_LWIP_DHCPS

The maximum number of DHCP clients that are connected to the server. After this number is exceeded, DHCP server removes of the oldest device from it’ s address pool, without notification.

Range:
- from 1 to 64

Default value:
- 8

CONFIG_LWIP_AUTOIP

Enable IPV4 Link-Local Addressing (AUTOIP)

Found in: Component config > LWIP

Enabling this option allows the device to self-assign an address in the 169.256/16 range if none is assigned statically or via DHCP.

See RFC 3927.

Default value:

- No (disabled)

Contains:

- *CONFIG_LWIP_AUTOIP_TRIES*
- *CONFIG_LWIP_AUTOIP_MAX_CONFLICTS*
- *CONFIG_LWIP_AUTOIP_RATE_LIMIT_INTERVAL*

CONFIG_LWIP_AUTOIP_TRIES

DHCP Probes before self-assigning IPv4 LL address

Found in: Component config > LWIP > CONFIG_LWIP_AUTOIP

DHCP client will send this many probes before self-assigning a link local address.

From LWIP help: "This can be set as low as 1 to get an AutoIP address very quickly, but you should be prepared to handle a changing IP address when DHCP overrides AutoIP." (In the case of ESP-IDF, this means multiple SYSTEM_EVENT_STA_GOT_IP events.)

Range:

- from 1 to 100 if *CONFIG_LWIP_AUTOIP*

Default value:

- 2 if *CONFIG_LWIP_AUTOIP*

CONFIG_LWIP_AUTOIP_MAX_CONFLICTS

Max IP conflicts before rate limiting

Found in: Component config > LWIP > CONFIG_LWIP_AUTOIP

If the AUTOIP functionality detects this many IP conflicts while self-assigning an address, it will go into a rate limited mode.

Range:

- from 1 to 100 if *CONFIG_LWIP_AUTOIP*

Default value:

- 9 if *CONFIG_LWIP_AUTOIP*

CONFIG_LWIP_AUTOIP_RATE_LIMIT_INTERVAL

Rate limited interval (seconds)

Found in: Component config > LWIP > CONFIG_LWIP_AUTOIP

If rate limiting self-assignment requests, wait this long between each request.

Range:

- from 5 to 120 if *CONFIG_LWIP_AUTOIP*

Default value:

- 20 if *CONFIG_LWIP_AUTOIP*

CONFIG_LWIP_IPV6

Enable IPv6

Found in: Component config > LWIP

Enable IPv6 function. If not use IPv6 function, set this option to n. If disabling LWIP_IPV6 then some other components (coap and asio) will no longer be available.

Default value:

- Yes (enabled)

CONFIG_LWIP_IPV6_AUTOCONFIG

Enable IPV6 stateless address autoconfiguration (SLAAC)

Found in: Component config > LWIP > CONFIG_LWIP_IPV6

Enabling this option allows the devices to IPV6 stateless address autoconfiguration (SLAAC).

See RFC 4862.

Default value:

- No (disabled)

CONFIG_LWIP_NETIF_LOOPBACK

Support per-interface loopback

Found in: Component config > LWIP

Enabling this option means that if a packet is sent with a destination address equal to the interface's own IP address, it will "loop back" and be received by this interface.

Default value:

- Yes (enabled)

Contains:

- *CONFIG_LWIP_LOOPBACK_MAX_PBUFS*

CONFIG_LWIP_LOOPBACK_MAX_PBUFS

Max queued loopback packets per interface

Found in: Component config > LWIP > CONFIG_LWIP_NETIF_LOOPBACK

Configure the maximum number of packets which can be queued for loopback on a given interface. Reducing this number may cause packets to be dropped, but will avoid filling memory with queued packet data.

Range:

- from 0 to 16

Default value:

- 8

TCP Contains:

- *CONFIG_LWIP_TCP_WND_DEFAULT*
- *CONFIG_LWIP_TCP_SND_BUF_DEFAULT*
- *CONFIG_LWIP_TCP_RECVMBOX_SIZE*
- *CONFIG_LWIP_TCP_RTO_TIME*
- *CONFIG_LWIP_TCP_KEEP_CONNECTION_WHEN_IP_CHANGES*
- *CONFIG_LWIP_MAX_ACTIVE_TCP*
- *CONFIG_LWIP_TCP_FIN_WAIT_TIMEOUT*
- *CONFIG_LWIP_MAX_LISTENING_TCP*
- *CONFIG_LWIP_TCP_MAXRTX*
- *CONFIG_LWIP_TCP_SYNMAXRTX*
- *CONFIG_LWIP_TCP_MSL*
- *CONFIG_LWIP_TCP_MSS*
- *CONFIG_LWIP_TCP_OVERSIZE*
- *CONFIG_LWIP_TCP_QUEUE_OOSEQ*
- *CONFIG_LWIP_TCP_SACK_OUT*

- *CONFIG_LWIP_WND_SCALE*
- *CONFIG_LWIP_TCP_HIGH_SPEED_RETRANSMISSION*
- *CONFIG_LWIP_TCP_TMR_INTERVAL*

CONFIG_LWIP_MAX_ACTIVE_TCP

Maximum active TCP Connections

Found in: Component config > LWIP > TCP

The maximum number of simultaneously active TCP connections. The practical maximum limit is determined by available heap memory at runtime.

Changing this value by itself does not substantially change the memory usage of LWIP, except for preventing new TCP connections after the limit is reached.

Range:
- from 1 to 1024

Default value:
- 16

CONFIG_LWIP_MAX_LISTENING_TCP

Maximum listening TCP Connections

Found in: Component config > LWIP > TCP

The maximum number of simultaneously listening TCP connections. The practical maximum limit is determined by available heap memory at runtime.

Changing this value by itself does not substantially change the memory usage of LWIP, except for preventing new listening TCP connections after the limit is reached.

Range:
- from 1 to 1024

Default value:
- 16

CONFIG_LWIP_TCP_HIGH_SPEED_RETRANSMISSION

TCP high speed retransmissions

Found in: Component config > LWIP > TCP

Speed up the TCP retransmission interval. If disabled, it is recommended to change the number of SYN retransmissions to 6, and TCP initial rto time to 3000.

Default value:
- Yes (enabled)

CONFIG_LWIP_TCP_MAXRTX

Maximum number of retransmissions of data segments

Found in: Component config > LWIP > TCP

Set maximum number of retransmissions of data segments.

Range:
- from 3 to 12

Default value:
- 12

CONFIG_LWIP_TCP_SYNMAXRTX

Maximum number of retransmissions of SYN segments

Found in: Component config > LWIP > TCP

Set maximum number of retransmissions of SYN segments.

Range:
- from 3 to 12

Default value:
- 6
- 12

CONFIG_LWIP_TCP_MSS

Maximum Segment Size (MSS)

Found in: Component config > LWIP > TCP

Set maximum segment size for TCP transmission.

Can be set lower to save RAM, the default value 1460(ipv4)/1440(ipv6) will give best throughput. IPv4 TCP_MSS Range: 576 <= TCP_MSS <= 1460 IPv6 TCP_MSS Range: 1220<= TCP_mSS <= 1440

Range:
- from 536 to 1460

Default value:
- 1440

CONFIG_LWIP_TCP_TMR_INTERVAL

TCP timer interval(ms)

Found in: Component config > LWIP > TCP

Set TCP timer interval in milliseconds.

Can be used to speed connections on bad networks. A lower value will redeliver unacked packets faster.

Default value:
- 250

CONFIG_LWIP_TCP_MSL

Maximum segment lifetime (MSL)

Found in: Component config > LWIP > TCP

Set maximum segment lifetime in milliseconds.

Default value:
- 60000

CONFIG_LWIP_TCP_FIN_WAIT_TIMEOUT

Maximum FIN segment lifetime

Found in: Component config > LWIP > TCP

Set maximum segment lifetime in milliseconds.

Default value:
- 20000

CONFIG_LWIP_TCP_SND_BUF_DEFAULT

Default send buffer size

Found in: Component config > LWIP > TCP

Set default send buffer size for new TCP sockets.

Per-socket send buffer size can be changed at runtime with lwip_setsockopt(s, TCP_SNDBUF, ⋯).

This value must be at least 2x the MSS size, and the default is 4x the default MSS size.

Setting a smaller default SNDBUF size can save some RAM, but will decrease performance.

Range:
- from 2440 to 65535 if *CONFIG_LWIP_WND_SCALE*
- from 2440 to 1024000 if *CONFIG_LWIP_WND_SCALE*

Default value:
- 5744

CONFIG_LWIP_TCP_WND_DEFAULT

Default receive window size

Found in: Component config > LWIP > TCP

Set default TCP receive window size for new TCP sockets.

Per-socket receive window size can be changed at runtime with lwip_setsockopt(s, TCP_WINDOW, ⋯).

Setting a smaller default receive window size can save some RAM, but will significantly decrease performance.

Range:
- from 2440 to 65535 if *CONFIG_LWIP_WND_SCALE*
- from 2440 to 1024000 if *CONFIG_LWIP_WND_SCALE*

Default value:
- 5744

CONFIG_LWIP_TCP_RECVMBOX_SIZE

Default TCP receive mail box size

Found in: Component config > LWIP > TCP

Set TCP receive mail box size. Generally bigger value means higher throughput but more memory. The recommended value is: LWIP_TCP_WND_DEFAULT/TCP_MSS + 2, e.g. if LWIP_TCP_WND_DEFAULT=14360, TCP_MSS=1436, then the recommended receive mail box size is (14360/1436 + 2) = 12.

TCP receive mail box is a per socket mail box, when the application receives packets from TCP socket, LWIP core firstly posts the packets to TCP receive mail box and the application then fetches the packets from mail box. It means LWIP can caches maximum LWIP_TCP_RECCVMBOX_SIZE packets for each TCP socket, so the maximum possible cached TCP packets for all TCP sockets is LWIP_TCP_RECCVMBOX_SIZE multiples the maximum TCP socket number. In other words, the bigger LWIP_TCP_RECVMBOX_SIZE means more memory. On the other hand, if the receiv mail box is too small, the mail box may be full. If the mail box is full, the LWIP drops the packets. So generally we need to make sure the TCP receive mail box is big enough to avoid packet drop between LWIP core and application.

Range:
- from 6 to 64 if *CONFIG_LWIP_WND_SCALE*
- from 6 to 1024 if *CONFIG_LWIP_WND_SCALE*

Default value:
- 6

CONFIG_LWIP_TCP_QUEUE_OOSEQ

Queue incoming out-of-order segments

Found in: Component config > LWIP > TCP

Queue incoming out-of-order segments for later use.

Disable this option to save some RAM during TCP sessions, at the expense of increased retransmissions if segments arrive out of order.

Default value:

- Yes (enabled)

CONFIG_LWIP_TCP_SACK_OUT

Support sending selective acknowledgements

Found in: Component config > LWIP > TCP

TCP will support sending selective acknowledgements (SACKs).

Default value:

- No (disabled)

CONFIG_LWIP_TCP_KEEP_CONNECTION_WHEN_IP_CHANGES

Keep TCP connections when IP changed

Found in: Component config > LWIP > TCP

This option is enabled when the following scenario happen: network dropped and reconnected, IP changes is like: 192.168.0.2->0.0.0.0->192.168.0.2

Disable this option to keep consistent with the original LWIP code behavior.

Default value:

- No (disabled)

CONFIG_LWIP_TCP_OVERSIZE

Pre-allocate transmit PBUF size

Found in: Component config > LWIP > TCP

Allows enabling "oversize" allocation of TCP transmission pbufs ahead of time, which can reduce the length of pbuf chains used for transmission.

This will not make a difference to sockets where Nagle's algorithm is disabled.

Default value of MSS is fine for most applications, 25% MSS may save some RAM when only transmitting small amounts of data. Disabled will have worst performance and fragmentation characteristics, but uses least RAM overall.

Available options:

- MSS (LWIP_TCP_OVERSIZE_MSS)
- 25% MSS (LWIP_TCP_OVERSIZE_QUARTER_MSS)
- Disabled (LWIP_TCP_OVERSIZE_DISABLE)

CONFIG_LWIP_WND_SCALE

Support TCP window scale

Found in: Component config > LWIP > TCP

Enable this feature to support TCP window scaling.

Default value:

- No (disabled) if *CONFIG_SPIRAM_TRY_ALLOCATE_WIFI_LWIP*

CONFIG_LWIP_TCP_RCV_SCALE

Set TCP receiving window scaling factor

Found in: Component config > LWIP > TCP > CONFIG_LWIP_WND_SCALE

Enable this feature to support TCP window scaling.

Range:

- from 0 to 14 if *CONFIG_LWIP_WND_SCALE*

Default value:

- 0 if *CONFIG_LWIP_WND_SCALE*

CONFIG_LWIP_TCP_RTO_TIME

Default TCP rto time

Found in: Component config > LWIP > TCP

Set default TCP rto time for a reasonable initial rto. In bad network environment, recommend set value of rto time to 1500.

Default value:

- 3000
- 1500

UDP

Contains:

- *CONFIG_LWIP_UDP_RECVMBOX_SIZE*
- *CONFIG_LWIP_MAX_UDP_PCBS*

CONFIG_LWIP_MAX_UDP_PCBS

Maximum active UDP control blocks

Found in: Component config > LWIP > UDP

The maximum number of active UDP "connections" (ie UDP sockets sending/receiving data). The practical maximum limit is determined by available heap memory at runtime.

Range:

- from 1 to 1024

Default value:

- 16

CONFIG_LWIP_UDP_RECVMBOX_SIZE

Default UDP receive mail box size

Found in: Component config > LWIP > UDP

Set UDP receive mail box size. The recommended value is 6.

UDP receive mail box is a per socket mail box, when the application receives packets from UDP socket, LWIP core firstly posts the packets to UDP receive mail box and the application then fetches the packets from mail box. It means LWIP can caches maximum UDP_RECCVMBOX_SIZE packets for each UDP socket, so the maximum possible cached UDP packets for all UDP sockets is UDP_RECCVMBOX_SIZE multiples the maximum UDP socket number. In other words, the bigger UDP_RECVMBOX_SIZE means more memory. On the other hand, if the receiv mail box is too small, the mail box may be full. If the mail box is full, the LWIP drops the packets. So generally we

need to make sure the UDP receive mail box is big enough to avoid packet drop between LWIP core and application.

Range:
- from 6 to 64

Default value:
- 6

Checksums Contains:

- *CONFIG_LWIP_CHECKSUM_CHECK_ICMP*
- *CONFIG_LWIP_CHECKSUM_CHECK_IP*
- *CONFIG_LWIP_CHECKSUM_CHECK_UDP*

CONFIG_LWIP_CHECKSUM_CHECK_IP

Enable LWIP IP checksums

Found in: Component config > LWIP > Checksums

Enable checksum checking for received IP messages

Default value:
- No (disabled)

CONFIG_LWIP_CHECKSUM_CHECK_UDP

Enable LWIP UDP checksums

Found in: Component config > LWIP > Checksums

Enable checksum checking for received UDP messages

Default value:
- No (disabled)

CONFIG_LWIP_CHECKSUM_CHECK_ICMP

Enable LWIP ICMP checksums

Found in: Component config > LWIP > Checksums

Enable checksum checking for received ICMP messages

Default value:
- Yes (enabled)

CONFIG_LWIP_TCPIP_TASK_STACK_SIZE

TCP/IP Task Stack Size

Found in: Component config > LWIP

Configure TCP/IP task stack size, used by LWIP to process multi-threaded TCP/IP operations. Setting this stack too small will result in stack overflow crashes.

Range:
- from 2048 to 65536

Default value:
- 3072

CONFIG_LWIP_TCPIP_TASK_AFFINITY

TCP/IP task affinity

Found in: Component config > LWIP

Allows setting LwIP tasks affinity, i.e. whether the task is pinned to CPU0, pinned to CPU1, or allowed to run on any CPU. Currently this applies to "TCP/IP" task and "Ping" task.

Available options:

- No affinity (LWIP_TCPIP_TASK_AFFINITY_NO_AFFINITY)
- CPU0 (LWIP_TCPIP_TASK_AFFINITY_CPU0)
- CPU1 (LWIP_TCPIP_TASK_AFFINITY_CPU1)

CONFIG_LWIP_PPP_SUPPORT

Enable PPP support (new/experimental)

Found in: Component config > LWIP

Enable PPP stack. Now only PPP over serial is possible.

PPP over serial support is experimental and unsupported.

Default value:

- No (disabled)

Contains:

- *CONFIG_LWIP_PPP_ENABLE_IPV6*

CONFIG_LWIP_PPP_ENABLE_IPV6

Enable IPV6 support for PPP connections (IPV6CP)

Found in: Component config > LWIP > CONFIG_LWIP_PPP_SUPPORT

Enable IPV6 support in PPP for the local link between the DTE (processor) and DCE (modem). There are some modems which do not support the IPV6 addressing in the local link. If they are requested for IPV6CP negotiation, they may time out. This would in turn fail the configuration for the whole link. If your modem is not responding correctly to PPP Phase Network, try to disable IPV6 support.

Default value:

- Yes (enabled) if *CONFIG_LWIP_PPP_SUPPORT* && *CONFIG_LWIP_IPV6*

CONFIG_LWIP_IPV6_MEMP_NUM_ND6_QUEUE

Max number of IPv6 packets to queue during MAC resolution

Found in: Component config > LWIP

Config max number of IPv6 packets to queue during MAC resolution.

Range:

- from 3 to 20

Default value:

- 3

CONFIG_LWIP_IPV6_ND6_NUM_NEIGHBORS

Max number of entries in IPv6 neighbor cache

Found in: Component config > LWIP

Config max number of entries in IPv6 neighbor cache

Range:

- from 3 to 10

Default value:

- 5

CONFIG_LWIP_PPP_NOTIFY_PHASE_SUPPORT

Enable Notify Phase Callback

Found in: Component config > LWIP

Enable to set a callback which is called on change of the internal PPP state machine.

Default value:

- No (disabled) if *CONFIG_LWIP_PPP_SUPPORT*

CONFIG_LWIP_PPP_PAP_SUPPORT

Enable PAP support

Found in: Component config > LWIP

Enable Password Authentication Protocol (PAP) support

Default value:

- No (disabled) if *CONFIG_LWIP_PPP_SUPPORT*

CONFIG_LWIP_PPP_CHAP_SUPPORT

Enable CHAP support

Found in: Component config > LWIP

Enable Challenge Handshake Authentication Protocol (CHAP) support

Default value:

- No (disabled) if *CONFIG_LWIP_PPP_SUPPORT*

CONFIG_LWIP_PPP_MSCHAP_SUPPORT

Enable MSCHAP support

Found in: Component config > LWIP

Enable Microsoft version of the Challenge-Handshake Authentication Protocol (MSCHAP) support

Default value:

- No (disabled) if *CONFIG_LWIP_PPP_SUPPORT*

CONFIG_LWIP_PPP_MPPE_SUPPORT

Enable MPPE support

Found in: Component config > LWIP

Enable Microsoft Point-to-Point Encryption (MPPE) support

Default value:

- No (disabled) if *CONFIG_LWIP_PPP_SUPPORT*

CONFIG_LWIP_PPP_DEBUG_ON

Enable PPP debug log output

Found in: Component config > LWIP

Enable PPP debug log output

Default value:

- No (disabled) if *CONFIG_LWIP_PPP_SUPPORT*

CONFIG_LWIP_SLIP_SUPPORT

Enable SLIP support (new/experimental)

Found in: Component config > LWIP

Enable SLIP stack. Now only SLIP over serial is possible.

SLIP over serial support is experimental and unsupported.

Default value:

- No (disabled)

Contains:

- *CONFIG_LWIP_SLIP_DEBUG_ON*

CONFIG_LWIP_SLIP_DEBUG_ON

Enable SLIP debug log output

Found in: Component config > LWIP > CONFIG_LWIP_SLIP_SUPPORT

Enable SLIP debug log output

Default value:

- No (disabled) if *CONFIG_LWIP_SLIP_SUPPORT*

ICMP

Contains:

- *CONFIG_LWIP_ICMP*
- *CONFIG_LWIP_BROADCAST_PING*
- *CONFIG_LWIP_MULTICAST_PING*

CONFIG_LWIP_ICMP

ICMP: Enable ICMP

Found in: Component config > LWIP > ICMP

Enable ICMP module for check network stability

Default value:

- Yes (enabled)

CONFIG_LWIP_MULTICAST_PING

Respond to multicast pings

Found in: Component config > LWIP > ICMP

Default value:

- No (disabled)

CONFIG_LWIP_BROADCAST_PING

Respond to broadcast pings

Found in: Component config > LWIP > ICMP

Default value:
- No (disabled)

LWIP RAW API Contains:

- *CONFIG_LWIP_MAX_RAW_PCBS*

CONFIG_LWIP_MAX_RAW_PCBS

Maximum LWIP RAW PCBs

Found in: Component config > LWIP > LWIP RAW API

The maximum number of simultaneously active LWIP RAW protocol control blocks. The practical maximum limit is determined by available heap memory at runtime.

Range:
- from 1 to 1024

Default value:
- 16

SNTP Contains:

- *CONFIG_LWIP_DHCP_MAX_NTP_SERVERS*
- *CONFIG_LWIP_SNTP_UPDATE_DELAY*

CONFIG_LWIP_DHCP_MAX_NTP_SERVERS

Maximum number of NTP servers

Found in: Component config > LWIP > SNTP

Set maximum number of NTP servers used by LwIP SNTP module. First argument of sntp_setserver/sntp_setservername functions is limited to this value.

Range:
- from 1 to 16

Default value:
- 1

CONFIG_LWIP_SNTP_UPDATE_DELAY

Request interval to update time (ms)

Found in: Component config > LWIP > SNTP

This option allows you to set the time update period via SNTP. Default is 1 hour. Must not be below 15 seconds by specification. (SNTPv4 RFC 4330 enforces a minimum update time of 15 seconds).

Range:
- from 15000 to 4294967295

Default value:
- 3600000

CONFIG_LWIP_ESP_LWIP_ASSERT

Enable LWIP ASSERT checks

Found in: Component config > LWIP

Enable this option keeps LWIP assertion checks enabled. It is recommended to keep this option enabled.

If asserts are disabled for the entire project, they are also disabled for LWIP and this option is ignored.

Default value:

- Yes (enabled) if COMPILER_OPTIMIZATION_ASSERTIONS_DISABLE

Hooks Contains:

- *CONFIG_LWIP_HOOK_IP6_ROUTE*
- *CONFIG_LWIP_HOOK_NETCONN_EXTERNAL_RESOLVE*
- *CONFIG_LWIP_HOOK_TCP_ISN*

CONFIG_LWIP_HOOK_TCP_ISN

TCP ISN Hook

Found in: Component config > LWIP > Hooks

Enables to define a TCP ISN hook to randomize initial sequence number in TCP connection. The default TCP ISN algorithm used in IDF (standardized in RFC 6528) produces ISN by combining an MD5 of the new TCP id and a stable secret with the current time. This is because the lwIP implementation (*tcp_next_iss*) is not very strong, as it does not take into consideration any platform specific entropy source.

Set to LWIP_HOOK_TCP_ISN_CUSTOM to provide custom implementation. Set to LWIP_HOOK_TCP_ISN_NONE to use lwIP implementation.

Available options:

- No hook declared (LWIP_HOOK_TCP_ISN_NONE)
- Default implementation (LWIP_HOOK_TCP_ISN_DEFAULT)
- Custom implementation (LWIP_HOOK_TCP_ISN_CUSTOM)

CONFIG_LWIP_HOOK_IP6_ROUTE

IPv6 route Hook

Found in: Component config > LWIP > Hooks

Enables custom IPv6 route hook. Setting this to "default" provides weak implementation stub that could be overwritten in application code. Setting this to "custom" provides hook's declaration only and expects the application to implement it.

Available options:

- No hook declared (LWIP_HOOK_IP6_ROUTE_NONE)
- Default (weak) implementation (LWIP_HOOK_IP6_ROUTE_DEFAULT)
- Custom implementation (LWIP_HOOK_IP6_ROUTE_CUSTOM)

CONFIG_LWIP_HOOK_NETCONN_EXTERNAL_RESOLVE

Netconn external resolve Hook

Found in: Component config > LWIP > Hooks

Enables custom DNS resolve hook. Setting this to "default" provides weak implementation stub that could be overwritten in application code. Setting this to "custom" provides hook's declaration only and expects the application to implement it.

Available options:

- No hook declared (LWIP_HOOK_NETCONN_EXT_RESOLVE_NONE)
- Default (weak) implementation (LWIP_HOOK_NETCONN_EXT_RESOLVE_DEFAULT)
- Custom implementation (LWIP_HOOK_NETCONN_EXT_RESOLVE_CUSTOM)

CONFIG_LWIP_DEBUG

Enable LWIP Debug

Found in: Component config > LWIP

Default value:

- No (disabled)

Contains:

- *CONFIG_LWIP_API_LIB_DEBUG*
- *CONFIG_LWIP_DHCP_DEBUG*
- *CONFIG_LWIP_DHCP_STATE_DEBUG*
- *CONFIG_LWIP_ETHARP_DEBUG*
- *CONFIG_LWIP_ICMP_DEBUG*
- *CONFIG_LWIP_ICMP6_DEBUG*
- *CONFIG_LWIP_IP_DEBUG*
- *CONFIG_LWIP_IP6_DEBUG*
- *CONFIG_LWIP_NETIF_DEBUG*
- *CONFIG_LWIP_PBUF_DEBUG*
- *CONFIG_LWIP_SOCKETS_DEBUG*
- *CONFIG_LWIP_TCP_DEBUG*
- *CONFIG_LWIP_DEBUG_ESP_LOG*

CONFIG_LWIP_DEBUG_ESP_LOG

Route LWIP debugs through ESP_LOG interface

Found in: Component config > LWIP > CONFIG_LWIP_DEBUG

Enabling this option routes all enabled LWIP debugs through ESP_LOGD.

Default value:

- No (disabled) if *CONFIG_LWIP_DEBUG*

CONFIG_LWIP_NETIF_DEBUG

Enable netif debug messages

Found in: Component config > LWIP > CONFIG_LWIP_DEBUG

Default value:

- No (disabled) if *CONFIG_LWIP_DEBUG*

CONFIG_LWIP_PBUF_DEBUG

Enable pbuf debug messages

Found in: Component config > LWIP > CONFIG_LWIP_DEBUG

Default value:

- No (disabled) if *CONFIG_LWIP_DEBUG*

CONFIG_LWIP_ETHARP_DEBUG

Enable etharp debug messages

Found in: Component config > LWIP > CONFIG_LWIP_DEBUG

Default value:

- No (disabled) if *CONFIG_LWIP_DEBUG*

CONFIG_LWIP_API_LIB_DEBUG

Enable api lib debug messages

Found in: Component config > LWIP > CONFIG_LWIP_DEBUG

Default value:

- No (disabled) if *CONFIG_LWIP_DEBUG*

CONFIG_LWIP_SOCKETS_DEBUG

Enable socket debug messages

Found in: Component config > LWIP > CONFIG_LWIP_DEBUG

Default value:

- No (disabled) if *CONFIG_LWIP_DEBUG*

CONFIG_LWIP_IP_DEBUG

Enable IP debug messages

Found in: Component config > LWIP > CONFIG_LWIP_DEBUG

Default value:

- No (disabled) if *CONFIG_LWIP_DEBUG*

CONFIG_LWIP_ICMP_DEBUG

Enable ICMP debug messages

Found in: Component config > LWIP > CONFIG_LWIP_DEBUG

Default value:

- No (disabled) if *CONFIG_LWIP_DEBUG* && *CONFIG_LWIP_ICMP*

CONFIG_LWIP_DHCP_STATE_DEBUG

Enable DHCP state tracking

Found in: Component config > LWIP > CONFIG_LWIP_DEBUG

Default value:

- No (disabled) if *CONFIG_LWIP_DEBUG*

CONFIG_LWIP_DHCP_DEBUG

Enable DHCP debug messages

Found in: Component config > LWIP > CONFIG_LWIP_DEBUG

Default value:

- No (disabled) if *CONFIG_LWIP_DEBUG*

CONFIG_LWIP_IP6_DEBUG

Enable IP6 debug messages

Found in: Component config > LWIP > CONFIG_LWIP_DEBUG

Default value:

- No (disabled) if *CONFIG_LWIP_DEBUG*

CONFIG_LWIP_ICMP6_DEBUG

Enable ICMP6 debug messages

Found in: Component config > LWIP > CONFIG_LWIP_DEBUG

Default value:

- No (disabled) if *CONFIG_LWIP_DEBUG*

CONFIG_LWIP_TCP_DEBUG

Enable TCP debug messages

Found in: Component config > LWIP > CONFIG_LWIP_DEBUG

Default value:

- No (disabled) if *CONFIG_LWIP_DEBUG*

mbedTLS Contains:

- *CONFIG_MBEDTLS_ASYMMETRIC_CONTENT_LEN*
- *Certificate Bundle*
- *Certificates*
- *CONFIG_MBEDTLS_CHACHA20_C*
- *CONFIG_MBEDTLS_ECP_C*
- *CONFIG_MBEDTLS_CMAC_C*
- *CONFIG_MBEDTLS_ECDSA_DETERMINISTIC*
- *CONFIG_MBEDTLS_HARDWARE_AES*
- *CONFIG_MBEDTLS_ATCA_HW_ECDSA_SIGN*
- *CONFIG_MBEDTLS_ATCA_HW_ECDSA_VERIFY*
- *CONFIG_MBEDTLS_HARDWARE_MPI*
- *CONFIG_MBEDTLS_HARDWARE_SHA*
- *CONFIG_MBEDTLS_DEBUG*
- *CONFIG_MBEDTLS_ECP_RESTARTABLE*
- *CONFIG_MBEDTLS_HAVE_TIME*
- *CONFIG_MBEDTLS_RIPEMD160_C*
- *CONFIG_MBEDTLS_SHA512_C*
- *CONFIG_MBEDTLS_THREADING_C*
- *CONFIG_MBEDTLS_X509_CHECK_EXTENDED_KEY_USAGE*
- *CONFIG_MBEDTLS_X509_CHECK_KEY_USAGE*
- *CONFIG_MBEDTLS_LARGE_KEY_SOFTWARE_MPI*
- *CONFIG_MBEDTLS_HKDF_C*
- *CONFIG_MBEDTLS_SSL_PROTO_SSL3*
- *mbedTLS v2.28.x related*
- *CONFIG_MBEDTLS_MEM_ALLOC_MODE*
- *CONFIG_MBEDTLS_POLY1305_C*
- *CONFIG_MBEDTLS_SECURITY_RISKS*
- *CONFIG_MBEDTLS_SSL_ALPN*
- *CONFIG_MBEDTLS_SSL_PROTO_DTLS*
- *CONFIG_MBEDTLS_SSL_PROTO_TLS1*
- *CONFIG_MBEDTLS_SSL_PROTO_TLS1_1*
- *CONFIG_MBEDTLS_SSL_PROTO_TLS1_2*

- *CONFIG_MBEDTLS_SSL_RENEGOTIATION*
- *Symmetric Ciphers*
- *TLS Key Exchange Methods*
- *CONFIG_MBEDTLS_SSL_MAX_CONTENT_LEN*
- *CONFIG_MBEDTLS_TLS_MODE*
- *CONFIG_MBEDTLS_CLIENT_SSL_SESSION_TICKETS*
- *CONFIG_MBEDTLS_SERVER_SSL_SESSION_TICKETS*
- *CONFIG_MBEDTLS_ROM_MD5*
- *CONFIG_MBEDTLS_DYNAMIC_BUFFER*

CONFIG_MBEDTLS_MEM_ALLOC_MODE

Memory allocation strategy

Found in: Component config > mbedTLS

Allocation strategy for mbedTLS, essentially provides ability to allocate all required dynamic allocations from,

- Internal DRAM memory only
- External SPIRAM memory only
- Either internal or external memory based on default malloc() behavior in ESP-IDF
- Custom allocation mode, by overwriting calloc()/free() using mbedtls_platform_set_calloc_free() function
- Internal IRAM memory wherever applicable else internal DRAM

Recommended mode here is always internal (*), since that is most preferred from security perspective. But if application requirement does not allow sufficient free internal memory then alternate mode can be selected.

(*) In case of ESP32-S2/ESP32-S3, hardware allows encryption of external SPIRAM contents provided hardware flash encryption feature is enabled. In that case, using external SPIRAM allocation strategy is also safe choice from security perspective.

Available options:

- Internal memory (MBEDTLS_INTERNAL_MEM_ALLOC)
- External SPIRAM (MBEDTLS_EXTERNAL_MEM_ALLOC)
- Default alloc mode (MBEDTLS_DEFAULT_MEM_ALLOC)
- Custom alloc mode (MBEDTLS_CUSTOM_MEM_ALLOC)
- Internal IRAM (MBEDTLS_IRAM_8BIT_MEM_ALLOC)
  Allows to use IRAM memory region as 8bit accessible region.
  TLS input and output buffers will be allocated in IRAM section which is 32bit aligned memory. Every unaligned (8bit or 16bit) access will result in an exception and incur penalty of certain clock cycles per unaligned read/write.

CONFIG_MBEDTLS_SSL_MAX_CONTENT_LEN

TLS maximum message content length

Found in: Component config > mbedTLS

Maximum TLS message length (in bytes) supported by mbedTLS.

16384 is the default and this value is required to comply fully with TLS standards.

However you can set a lower value in order to save RAM. This is safe if the other end of the connection supports Maximum Fragment Length Negotiation Extension (max_fragment_length, see RFC6066) or you know for certain that it will never send a message longer than a certain number of bytes.

If the value is set too low, symptoms are a failed TLS handshake or a return value of MBEDTLS_ERR_SSL_INVALID_RECORD (-0x7200).

Range:

- from 512 to 16384

Default value:

- 16384

CONFIG_MBEDTLS_ASYMMETRIC_CONTENT_LEN

Asymmetric in/out fragment length

Found in: Component config > mbedTLS

If enabled, this option allows customizing TLS in/out fragment length in asymmetric way. Please note that enabling this with default values saves 12KB of dynamic memory per TLS connection.

Default value:

- Yes (enabled)

CONFIG_MBEDTLS_SSL_IN_CONTENT_LEN

TLS maximum incoming fragment length

Found in: Component config > mbedTLS > CONFIG_MBEDTLS_ASYMMETRIC_CONTENT_LEN

This defines maximum incoming fragment length, overriding default maximum content length (MBEDTLS_SSL_MAX_CONTENT_LEN).

Range:

- from 512 to 16384

Default value:

- 16384

CONFIG_MBEDTLS_SSL_OUT_CONTENT_LEN

TLS maximum outgoing fragment length

Found in: Component config > mbedTLS > CONFIG_MBEDTLS_ASYMMETRIC_CONTENT_LEN

This defines maximum outgoing fragment length, overriding default maximum content length (MBEDTLS_SSL_MAX_CONTENT_LEN).

Range:

- from 512 to 16384

Default value:

- 4096

CONFIG_MBEDTLS_DYNAMIC_BUFFER

Using dynamic TX/RX buffer

Found in: Component config > mbedTLS

Using dynamic TX/RX buffer. After enabling this option, mbedTLS will allocate TX buffer when need to send data and then free it if all data is sent, allocate RX buffer when need to receive data and then free it when all data is used or read by upper layer.

By default, when SSL is initialized, mbedTLS also allocate TX and RX buffer with the default value of "MBEDTLS_SSL_OUT_CONTENT_LEN" or "MBEDTLS_SSL_IN_CONTENT_LEN" , so to save more heap, users can set the options to be an appropriate value.

Default value:

- No (disabled) if *CONFIG_MBEDTLS_SSL_PROTO_DTLS* && *CONFIG_MBEDTLS_SSL_VARIABLE_BUFFER_LENGTH*

CONFIG_MBEDTLS_DYNAMIC_FREE_PEER_CERT

Free SSL peer certificate after its usage

Found in: Component config > mbedTLS > CONFIG_MBEDTLS_DYNAMIC_BUFFER

Free peer certificate after its usage in handshake process.

Default value:

- No (disabled) if *CONFIG_MBEDTLS_DYNAMIC_BUFFER*

CONFIG_MBEDTLS_DYNAMIC_FREE_CONFIG_DATA

Free private key and DHM data after its usage

Found in: Component config > mbedTLS > CONFIG_MBEDTLS_DYNAMIC_BUFFER

Free private key and DHM data after its usage in handshake process.

The option will decrease heap cost when handshake, but also lead to problem:

Becasue all certificate, private key and DHM data are freed so users should register certificate and private key to ssl config object again.

Default value:

- No (disabled) if *CONFIG_MBEDTLS_DYNAMIC_BUFFER*

CONFIG_MBEDTLS_DYNAMIC_FREE_CA_CERT

Free SSL CA certificate after its usage

Found in: Component config > mbedTLS > CONFIG_MBEDTLS_DYNAMIC_BUFFER > CONFIG_MBEDTLS_DYNAMIC_FREE_CONFIG_DATA

Free CA certificate after its usage in the handshake process. This option will decrease the heap footprint for the TLS handshake, but may lead to a problem: If the respective ssl object needs to perform the TLS handshake again, the CA certificate should once again be registered to the ssl object.

Default value:

- Yes (enabled) if *CONFIG_MBEDTLS_DYNAMIC_FREE_CONFIG_DATA*

CONFIG_MBEDTLS_DEBUG

Enable mbedTLS debugging

Found in: Component config > mbedTLS

Enable mbedTLS debugging functions at compile time.

If this option is enabled, you can include "mbedtls/esp_debug.h" and call mbedtls_esp_enable_debug_log() at runtime in order to enable mbedTLS debug output via the ESP log mechanism.

Default value:

- No (disabled)

CONFIG_MBEDTLS_DEBUG_LEVEL

Set mbedTLS debugging level

Found in: Component config > mbedTLS > CONFIG_MBEDTLS_DEBUG

Set mbedTLS debugging level

Available options:

- Warning (MBEDTLS_DEBUG_LEVEL_WARN)
- Info (MBEDTLS_DEBUG_LEVEL_INFO)

- Debug (MBEDTLS_DEBUG_LEVEL_DEBUG)
- Verbose (MBEDTLS_DEBUG_LEVEL_VERBOSE)

mbedTLS v2.28.x related Contains:

- *DTLS-based configurations*
- *CONFIG_MBEDTLS_SSL_CONTEXT_SERIALIZATION*
- *CONFIG_MBEDTLS_X509_TRUSTED_CERT_CALLBACK*
- *CONFIG_MBEDTLS_SSL_KEEP_PEER_CERTIFICATE*
- *CONFIG_MBEDTLS_ECDH_LEGACY_CONTEXT*
- *CONFIG_MBEDTLS_SSL_VARIABLE_BUFFER_LENGTH*

CONFIG_MBEDTLS_SSL_VARIABLE_BUFFER_LENGTH

Variable SSL buffer length

Found in: Component config > mbedTLS > mbedTLS v2.28.x related

This enables the SSL buffer to be resized automatically based on the negotiated maximum fragment length in each direction.

Default value:

- No (disabled)

CONFIG_MBEDTLS_ECDH_LEGACY_CONTEXT

Use a backward compatible ECDH context (Experimental)

Found in: Component config > mbedTLS > mbedTLS v2.28.x related

Use the legacy ECDH context format. Define this option only if you enable MBEDTLS_ECP_RESTARTABLE or if you want to access ECDH context fields directly.

Default value:

- Yes (enabled) if *CONFIG_MBEDTLS_ECDH_C* && *CONFIG_MBEDTLS_ECP_RESTARTABLE*

CONFIG_MBEDTLS_X509_TRUSTED_CERT_CALLBACK

Enable trusted certificate callbacks

Found in: Component config > mbedTLS > mbedTLS v2.28.x related

Enables users to configure the set of trusted certificates through a callback instead of a linked list.

See mbedTLS documentation for required API and more details.

Default value:

- No (disabled)

CONFIG_MBEDTLS_SSL_CONTEXT_SERIALIZATION

Enable serialization of the TLS context structures

Found in: Component config > mbedTLS > mbedTLS v2.28.x related

Enable serialization of the TLS context structures This is a local optimization in handling a single, potentially long-lived connection.

See mbedTLS documentation for required API and more details. Disabling this option will save some code size.

Default value:

- No (disabled)

CONFIG_MBEDTLS_SSL_KEEP_PEER_CERTIFICATE

Keep peer certificate after handshake completion

Found in: Component config > mbedTLS > mbedTLS v2.28.x related

Keep the peer's certificate after completion of the handshake. Disabling this option will save about 4kB of heap and some code size.

See mbedTLS documentation for required API and more details.

Default value:

- Yes (enabled) if *CONFIG_MBEDTLS_DYNAMIC_FREE_PEER_CERT*

DTLS-based configurations Contains:

- *CONFIG_MBEDTLS_SSL_DTLS_SRTP*
- *CONFIG_MBEDTLS_SSL_DTLS_CONNECTION_ID*

CONFIG_MBEDTLS_SSL_DTLS_CONNECTION_ID

Support for the DTLS Connection ID extension

Found in: Component config > mbedTLS > mbedTLS v2.28.x related > DTLS-based configurations

Enable support for the DTLS Connection ID extension which allows to identify DTLS connections across changes in the underlying transport. The Connection ID extension is still in draft state. Refer: version draft-ietf-tls-dtls-connection-id-05

Default value:

- No (disabled) if *CONFIG_MBEDTLS_SSL_PROTO_DTLS*

CONFIG_MBEDTLS_SSL_CID_IN_LEN_MAX

Maximum length of CIDs used for incoming DTLS messages

Found in: Component config > mbedTLS > mbedTLS v2.28.x related > DTLS-based configurations > CONFIG_MBEDTLS_SSL_DTLS_CONNECTION_ID

Maximum length of CIDs used for incoming DTLS messages

Range:

- from 0 to 32 if *CONFIG_MBEDTLS_SSL_DTLS_CONNECTION_ID*

Default value:

- 32 if *CONFIG_MBEDTLS_SSL_DTLS_CONNECTION_ID*

CONFIG_MBEDTLS_SSL_CID_OUT_LEN_MAX

Maximum length of CIDs used for outgoing DTLS messages

Found in: Component config > mbedTLS > mbedTLS v2.28.x related > DTLS-based configurations > CONFIG_MBEDTLS_SSL_DTLS_CONNECTION_ID

Maximum length of CIDs used for outgoing DTLS messages

Range:

- from 0 to 32 if *CONFIG_MBEDTLS_SSL_DTLS_CONNECTION_ID*

Default value:

- 32 if *CONFIG_MBEDTLS_SSL_DTLS_CONNECTION_ID*

CONFIG_MBEDTLS_SSL_CID_PADDING_GRANULARITY

Record plaintext padding (for DTLS 1.2)

Found in: Component config > mbedTLS > mbedTLS v2.28.x related > DTLS-based configurations > CONFIG_MBEDTLS_SSL_DTLS_CONNECTION_ID

Controls the use of record plaintext padding when using the Connection ID extension in DTLS 1.2.

The padding will always be chosen so that the length of the padded plaintext is a multiple of the value of this option.

Notes: A value of 1 means that no padding will be used for outgoing records. On systems lacking division instructions, a power of two should be preferred.

Range:

- from 0 to 32 if *CONFIG_MBEDTLS_SSL_DTLS_CONNECTION_ID*

Default value:

- 16 if *CONFIG_MBEDTLS_SSL_DTLS_CONNECTION_ID*

CONFIG_MBEDTLS_SSL_DTLS_SRTP

Enable support for negotiation of DTLS-SRTP (RFC 5764)

Found in: Component config > mbedTLS > mbedTLS v2.28.x related > DTLS-based configurations

Enable support for negotiation of DTLS-SRTP (RFC 5764) through the use_srtp extension.

See mbedTLS documentation for required API and more details. Disabling this option will save some code size.

Default value:

- No (disabled) if *CONFIG_MBEDTLS_SSL_PROTO_DTLS*

Certificate Bundle Contains:

- *CONFIG_MBEDTLS_CERTIFICATE_BUNDLE*

CONFIG_MBEDTLS_CERTIFICATE_BUNDLE

Enable trusted root certificate bundle

Found in: Component config > mbedTLS > Certificate Bundle

Enable support for large number of default root certificates

When enabled this option allows user to store default as well as customer specific root certificates in compressed format rather than storing full certificate. For the root certificates the public key and the subject name will be stored.

Default value:

- Yes (enabled)

CONFIG_MBEDTLS_DEFAULT_CERTIFICATE_BUNDLE

Default certificate bundle options

Found in: Component config > mbedTLS > Certificate Bundle > CONFIG_MBEDTLS_CERTIFICATE_BUNDLE

Available options:

- Use the full default certificate bundle (MBEDTLS_CERTIFICATE_BUNDLE_DEFAULT_FULL)
- Use only the most common certificates from the default bundles (MBEDTLS_CERTIFICATE_BUNDLE_DEFAULT_CMN)
  Use only the most common certificates from the default bundles, reducing the size with 50%, while still having around 99% coverage.

- Do not use the default certificate bundle (MBEDTLS_CERTIFICATE_BUNDLE_DEFAULT_NONE)

CONFIG_MBEDTLS_CUSTOM_CERTIFICATE_BUNDLE

Add custom certificates to the default bundle

Found in: Component config > mbedTLS > Certificate Bundle > CONFIG_MBEDTLS_CERTIFICATE_BUNDLE

Default value:

- No (disabled)

CONFIG_MBEDTLS_CUSTOM_CERTIFICATE_BUNDLE_PATH

Custom certificate bundle path

Found in: Component config > mbedTLS > Certificate Bundle > CONFIG_MBEDTLS_CERTIFICATE_BUNDLE > CONFIG_MBEDTLS_CUSTOM_CERTIFICATE_BUNDLE

Name of the custom certificate directory or file. This path is evaluated relative to the project root directory.

CONFIG_MBEDTLS_CERTIFICATE_BUNDLE_MAX_CERTS

Maximum no of certificates allowed in certificate bundle

Found in: Component config > mbedTLS > Certificate Bundle > CONFIG_MBEDTLS_CERTIFICATE_BUNDLE

Default value:

- 200

CONFIG_MBEDTLS_ECP_RESTARTABLE

Enable mbedTLS ecp restartable

Found in: Component config > mbedTLS

Enable "non-blocking" ECC operations that can return early and be resumed.

Default value:

- No (disabled)

CONFIG_MBEDTLS_CMAC_C

Enable CMAC mode for block ciphers

Found in: Component config > mbedTLS

Enable the CMAC (Cipher-based Message Authentication Code) mode for block ciphers.

Default value:

- No (disabled)

CONFIG_MBEDTLS_HARDWARE_AES

Enable hardware AES acceleration

Found in: Component config > mbedTLS

Enable hardware accelerated AES encryption & decryption.

Note that if the ESP32 CPU is running at 240MHz, hardware AES does not offer any speed boost over software AES.

Default value:

- Yes (enabled) if SPIRAM_CACHE_WORKAROUND_STRATEGY_DUPLDST

CONFIG_MBEDTLS_HARDWARE_MPI

Enable hardware MPI (bignum) acceleration

Found in: Component config > mbedTLS

Enable hardware accelerated multiple precision integer operations.

Hardware accelerated multiplication, modulo multiplication, and modular exponentiation for up to SOC_RSA_MAX_BIT_LEN bit results.

These operations are used by RSA.

Default value:

- Yes (enabled) if SPIRAM_CACHE_WORKAROUND_STRATEGY_DUPLDST

CONFIG_MBEDTLS_HARDWARE_SHA

Enable hardware SHA acceleration

Found in: Component config > mbedTLS

Enable hardware accelerated SHA1, SHA256, SHA384 & SHA512 in mbedTLS.

Due to a hardware limitation, on the ESP32 hardware acceleration is only guaranteed if SHA digests are calculated one at a time. If more than one SHA digest is calculated at the same time, one will be calculated fully in hardware and the rest will be calculated (at least partially calculated) in software. This happens automatically.

SHA hardware acceleration is faster than software in some situations but slower in others. You should benchmark to find the best setting for you.

Default value:

- Yes (enabled) if SPIRAM_CACHE_WORKAROUND_STRATEGY_DUPLDST

CONFIG_MBEDTLS_ROM_MD5

Use MD5 implementation in ROM

Found in: Component config > mbedTLS

Use ROM MD5 in mbedTLS.

Default value:

- Yes (enabled)

CONFIG_MBEDTLS_ATCA_HW_ECDSA_SIGN

Enable hardware ECDSA sign acceleration when using ATECC608A

Found in: Component config > mbedTLS

This option enables hardware acceleration for ECDSA sign function, only when using ATECC608A cryptoauth chip (integrated with ESP32-WROOM-32SE)

Default value:

- No (disabled)

CONFIG_MBEDTLS_ATCA_HW_ECDSA_VERIFY

Enable hardware ECDSA verify acceleration when using ATECC608A

Found in: Component config > mbedTLS

This option enables hardware acceleration for ECDSA sign function, only when using ATECC608A cryptoauth chip (integrated with ESP32-WROOM-32SE)

Default value:

- No (disabled)

CONFIG_MBEDTLS_HAVE_TIME

Enable mbedtls time support

Found in: Component config > mbedTLS

Enable use of time.h functions (time() and gmtime()) by mbedTLS.

This option doesn't require the system time to be correct, but enables functionality that requires relative timekeeping - for example periodic expiry of TLS session tickets or session cache entries.

Disabling this option will save some firmware size, particularly if the rest of the firmware doesn't call any standard timekeeeping functions.

Default value:

- Yes (enabled)

CONFIG_MBEDTLS_HAVE_TIME_DATE

Enable mbedtls certificate expiry check

Found in: Component config > mbedTLS > CONFIG_MBEDTLS_HAVE_TIME

Enables X.509 certificate expiry checks in mbedTLS.

If this option is disabled (default) then X.509 certificate "valid from" and "valid to" timestamp fields are ignored.

If this option is enabled, these fields are compared with the current system date and time. The time is retrieved using the standard time() and gmtime() functions. If the certificate is not valid for the current system time then verification will fail with code MBEDTLS_X509_BADCERT_FUTURE or MBEDTLS_X509_BADCERT_EXPIRED.

Enabling this option requires adding functionality in the firmware to set the system clock to a valid timestamp before using TLS. The recommended way to do this is via ESP-IDF's SNTP functionality, but any method can be used.

In the case where only a small number of certificates are trusted by the device, please carefully consider the tradeoffs of enabling this option. There may be undesired consequences, for example if all trusted certificates expire while the device is offline and a TLS connection is required to update. Or if an issue with the SNTP server means that the system time is invalid for an extended period after a reset.

Default value:

- No (disabled)

CONFIG_MBEDTLS_ECDSA_DETERMINISTIC

Enable deterministic ECDSA

Found in: Component config > mbedTLS

Standard ECDSA is "fragile" in the sense that lack of entropy when signing may result in a compromise of the long-term signing key.

Default value:

- Yes (enabled)

CONFIG_MBEDTLS_SHA512_C

Enable the SHA-384 and SHA-512 cryptographic hash algorithms

Found in: Component config > mbedTLS

Enable MBEDTLS_SHA512_C adds support for SHA-384 and SHA-512.

Default value:

- Yes (enabled)

CONFIG_MBEDTLS_TLS_MODE

TLS Protocol Role

Found in: Component config > mbedTLS

mbedTLS can be compiled with protocol support for the TLS server, TLS client, or both server and client.

Reducing the number of TLS roles supported saves code size.

Available options:

- Server & Client (MBEDTLS_TLS_SERVER_AND_CLIENT)
- Server (MBEDTLS_TLS_SERVER_ONLY)
- Client (MBEDTLS_TLS_CLIENT_ONLY)
- None (MBEDTLS_TLS_DISABLED)

TLS Key Exchange Methods

Contains:

- *CONFIG_MBEDTLS_KEY_EXCHANGE_DHE_RSA*
- *CONFIG_MBEDTLS_KEY_EXCHANGE_ECJPAKE*
- *CONFIG_MBEDTLS_PSK_MODES*
- *CONFIG_MBEDTLS_KEY_EXCHANGE_RSA*
- *CONFIG_MBEDTLS_KEY_EXCHANGE_ELLIPTIC_CURVE*

CONFIG_MBEDTLS_PSK_MODES

Enable pre-shared-key ciphersuites

Found in: Component config > mbedTLS > TLS Key Exchange Methods

Enable to show configuration for different types of pre-shared-key TLS authentatication methods.

Leaving this options disabled will save code size if they are not used.

Default value:

- No (disabled)

CONFIG_MBEDTLS_KEY_EXCHANGE_PSK

Enable PSK based ciphersuite modes

Found in: Component config > mbedTLS > TLS Key Exchange Methods > CONFIG_MBEDTLS_PSK_MODES

Enable to support symmetric key PSK (pre-shared-key) TLS key exchange modes.

Default value:

- No (disabled) if *CONFIG_MBEDTLS_PSK_MODES*

CONFIG_MBEDTLS_KEY_EXCHANGE_DHE_PSK

Enable DHE-PSK based ciphersuite modes

Found in: Component config > mbedTLS > TLS Key Exchange Methods > CONFIG_MBEDTLS_PSK_MODES

Enable to support Diffie-Hellman PSK (pre-shared-key) TLS authentication modes.

Default value:

- Yes (enabled) if *CONFIG_MBEDTLS_PSK_MODES*

CONFIG_MBEDTLS_KEY_EXCHANGE_ECDHE_PSK

Enable ECDHE-PSK based ciphersuite modes

Found in: Component config > mbedTLS > TLS Key Exchange Methods > CONFIG_MBEDTLS_PSK_MODES

Enable to support Elliptic-Curve-Diffie-Hellman PSK (pre-shared-key) TLS authentication modes.

Default value:

- Yes (enabled) if *CONFIG_MBEDTLS_PSK_MODES* && *CONFIG_MBEDTLS_ECDH_C*

CONFIG_MBEDTLS_KEY_EXCHANGE_RSA_PSK

Enable RSA-PSK based ciphersuite modes

Found in: Component config > mbedTLS > TLS Key Exchange Methods > CONFIG_MBEDTLS_PSK_MODES

Enable to support RSA PSK (pre-shared-key) TLS authentication modes.

Default value:

- Yes (enabled) if *CONFIG_MBEDTLS_PSK_MODES*

CONFIG_MBEDTLS_KEY_EXCHANGE_RSA

Enable RSA-only based ciphersuite modes

Found in: Component config > mbedTLS > TLS Key Exchange Methods

Enable to support ciphersuites with prefix TLS-RSA-WITH-

Default value:

- Yes (enabled)

CONFIG_MBEDTLS_KEY_EXCHANGE_DHE_RSA

Enable DHE-RSA based ciphersuite modes

Found in: Component config > mbedTLS > TLS Key Exchange Methods

Enable to support ciphersuites with prefix TLS-DHE-RSA-WITH-

Default value:

- Yes (enabled)

CONFIG_MBEDTLS_KEY_EXCHANGE_ELLIPTIC_CURVE

Support Elliptic Curve based ciphersuites

Found in: Component config > mbedTLS > TLS Key Exchange Methods

Enable to show Elliptic Curve based ciphersuite mode options.

Disabling all Elliptic Curve ciphersuites saves code size and can give slightly faster TLS handshakes, provided the server supports RSA-only ciphersuite modes.

Default value:

- Yes (enabled)

CONFIG_MBEDTLS_KEY_EXCHANGE_ECDHE_RSA

Enable ECDHE-RSA based ciphersuite modes

Found in: Component config > mbedTLS > TLS Key Exchange Methods > CONFIG_MBEDTLS_KEY_EXCHANGE_ELLIPTIC_CURVE

Enable to support ciphersuites with prefix TLS-ECDHE-RSA-WITH-

Default value:

- Yes (enabled)

CONFIG_MBEDTLS_KEY_EXCHANGE_ECDHE_ECDSA

Enable ECDHE-ECDSA based ciphersuite modes

Found in: Component config > mbedTLS > TLS Key Exchange Methods > CONFIG_MBEDTLS_KEY_EXCHANGE_ELLIPTIC_CURVE

Enable to support ciphersuites with prefix TLS-ECDHE-RSA-WITH-

Default value:

- Yes (enabled)

CONFIG_MBEDTLS_KEY_EXCHANGE_ECDH_ECDSA

Enable ECDH-ECDSA based ciphersuite modes

Found in: Component config > mbedTLS > TLS Key Exchange Methods > CONFIG_MBEDTLS_KEY_EXCHANGE_ELLIPTIC_CURVE

Enable to support ciphersuites with prefix TLS-ECDHE-RSA-WITH-

Default value:

- Yes (enabled)

CONFIG_MBEDTLS_KEY_EXCHANGE_ECDH_RSA

Enable ECDH-RSA based ciphersuite modes

Found in: Component config > mbedTLS > TLS Key Exchange Methods > CONFIG_MBEDTLS_KEY_EXCHANGE_ELLIPTIC_CURVE

Enable to support ciphersuites with prefix TLS-ECDHE-RSA-WITH-

Default value:

- Yes (enabled)

CONFIG_MBEDTLS_KEY_EXCHANGE_ECJPAKE

Enable ECJPAKE based ciphersuite modes

Found in: Component config > mbedTLS > TLS Key Exchange Methods

Enable to support ciphersuites with prefix TLS-ECJPAKE-WITH-

Default value:

- No (disabled) if *CONFIG_MBEDTLS_ECJPAKE_C* && *CONFIG_MBEDTLS_ECP_DP_SECP256R1_ENABLED*

CONFIG_MBEDTLS_SSL_RENEGOTIATION

Support TLS renegotiation

Found in: Component config > mbedTLS

The two main uses of renegotiation are (1) refresh keys on long-lived connections and (2) client authentication after the initial handshake. If you don't need renegotiation, disabling it will save code size and reduce the possibility of abuse/vulnerability.

Default value:

- Yes (enabled)

CONFIG_MBEDTLS_SSL_PROTO_SSL3

Legacy SSL 3.0 support

Found in: Component config > mbedTLS

Support the legacy SSL 3.0 protocol. Most servers will speak a newer TLS protocol these days.

Default value:

- No (disabled)

CONFIG_MBEDTLS_SSL_PROTO_TLS1

Support TLS 1.0 protocol

Found in: Component config > mbedTLS

Default value:

- Yes (enabled)

CONFIG_MBEDTLS_SSL_PROTO_TLS1_1

Support TLS 1.1 protocol

Found in: Component config > mbedTLS

Default value:

- Yes (enabled)

CONFIG_MBEDTLS_SSL_PROTO_TLS1_2

Support TLS 1.2 protocol

Found in: Component config > mbedTLS

Default value:

- Yes (enabled)

CONFIG_MBEDTLS_SSL_PROTO_DTLS

Support DTLS protocol (all versions)

Found in: Component config > mbedTLS

Requires TLS 1.1 to be enabled for DTLS 1.0 Requires TLS 1.2 to be enabled for DTLS 1.2

Default value:

- No (disabled)

CONFIG_MBEDTLS_SSL_ALPN

Support ALPN (Application Layer Protocol Negotiation)

Found in: Component config > mbedTLS

Disabling this option will save some code size if it is not needed.

Default value:

- Yes (enabled)

CONFIG_MBEDTLS_CLIENT_SSL_SESSION_TICKETS

TLS: Client Support for RFC 5077 SSL session tickets

Found in: Component config > mbedTLS

Client support for RFC 5077 session tickets. See mbedTLS documentation for more details. Disabling this option will save some code size.

Default value:

- Yes (enabled)

CONFIG_MBEDTLS_X509_CHECK_KEY_USAGE

Enable verification of the keyUsage extension

Found in: Component config > mbedTLS

Disabling this avoids problems with mis-issued and/or misused (intermediate) CA and leaf certificates. Depending on your PKI use, disabling this can be a security risk.

Default value:

- Yes (enabled)

CONFIG_MBEDTLS_X509_CHECK_EXTENDED_KEY_USAGE

Enable verification of the extendedKeyUsage extension

Found in: Component config > mbedTLS

Disabling this avoids problems with mis-issued and/or misused certificates. Depending on your PKI use, disabling this can be a security risk.

Default value:

- Yes (enabled)

CONFIG_MBEDTLS_SERVER_SSL_SESSION_TICKETS

TLS: Server Support for RFC 5077 SSL session tickets

Found in: Component config > mbedTLS

Server support for RFC 5077 session tickets. See mbedTLS documentation for more details. Disabling this option will save some code size.

Default value:

- Yes (enabled)

Symmetric Ciphers Contains:

- *CONFIG_MBEDTLS_AES_C*
- *CONFIG_MBEDTLS_BLOWFISH_C*
- *CONFIG_MBEDTLS_CAMELLIA_C*
- *CONFIG_MBEDTLS_CCM_C*

- *CONFIG_MBEDTLS_DES_C*
- *CONFIG_MBEDTLS_GCM_C*
- *CONFIG_MBEDTLS_NIST_KW_C*
- *CONFIG_MBEDTLS_RC4_MODE*
- *CONFIG_MBEDTLS_XTEA_C*

CONFIG_MBEDTLS_AES_C

AES block cipher

Found in: Component config > mbedTLS > Symmetric Ciphers

Default value:
- Yes (enabled)

CONFIG_MBEDTLS_CAMELLIA_C

Camellia block cipher

Found in: Component config > mbedTLS > Symmetric Ciphers

Default value:
- No (disabled)

CONFIG_MBEDTLS_DES_C

DES block cipher (legacy, insecure)

Found in: Component config > mbedTLS > Symmetric Ciphers

Enables the DES block cipher to support 3DES-based TLS ciphersuites.

3DES is vulnerable to the Sweet32 attack and should only be enabled if absolutely necessary.

Default value:
- No (disabled)

CONFIG_MBEDTLS_RC4_MODE

RC4 Stream Cipher (legacy, insecure)

Found in: Component config > mbedTLS > Symmetric Ciphers

ARCFOUR (RC4) stream cipher can be disabled entirely, enabled but not added to default ciphersuites, or enabled completely.

Please consider the security implications before enabling RC4.

Available options:
- Disabled (MBEDTLS_RC4_DISABLED)
- Enabled, not in default ciphersuites (MBEDTLS_RC4_ENABLED_NO_DEFAULT)
- Enabled (MBEDTLS_RC4_ENABLED)

CONFIG_MBEDTLS_BLOWFISH_C

Blowfish block cipher (read help)

Found in: Component config > mbedTLS > Symmetric Ciphers

Enables the Blowfish block cipher (not used for TLS sessions.)

The Blowfish cipher is not used for mbedTLS TLS sessions but can be used for other purposes. Read up on the limitations of Blowfish (including Sweet32) before enabling.

Default value:

- No (disabled)

CONFIG_MBEDTLS_XTEA_C

XTEA block cipher

Found in: Component config > mbedTLS > Symmetric Ciphers

Enables the XTEA block cipher.

Default value:

- No (disabled)

CONFIG_MBEDTLS_CCM_C

CCM (Counter with CBC-MAC) block cipher modes

Found in: Component config > mbedTLS > Symmetric Ciphers

Enable Counter with CBC-MAC (CCM) modes for AES and/or Camellia ciphers.

Disabling this option saves some code size.

Default value:

- Yes (enabled)

CONFIG_MBEDTLS_GCM_C

GCM (Galois/Counter) block cipher modes

Found in: Component config > mbedTLS > Symmetric Ciphers

Enable Galois/Counter Mode for AES and/or Camellia ciphers.

This option is generally faster than CCM.

Default value:

- Yes (enabled)

CONFIG_MBEDTLS_NIST_KW_C

NIST key wrapping (KW) and KW padding (KWP)

Found in: Component config > mbedTLS > Symmetric Ciphers

Enable NIST key wrapping and key wrapping padding.

Default value:

- No (disabled)

CONFIG_MBEDTLS_RIPEMD160_C

Enable RIPEMD-160 hash algorithm

Found in: Component config > mbedTLS

Enable the RIPEMD-160 hash algorithm.

Default value:

- No (disabled)

Certificates Contains:

- *CONFIG_MBEDTLS_PEM_PARSE_C*
- *CONFIG_MBEDTLS_PEM_WRITE_C*
- *CONFIG_MBEDTLS_X509_CRL_PARSE_C*
- *CONFIG_MBEDTLS_X509_CSR_PARSE_C*

CONFIG_MBEDTLS_PEM_PARSE_C

Read & Parse PEM formatted certificates

Found in: Component config > mbedTLS > Certificates

Enable decoding/parsing of PEM formatted certificates.

If your certificates are all in the simpler DER format, disabling this option will save some code size.

Default value:

- Yes (enabled)

CONFIG_MBEDTLS_PEM_WRITE_C

Write PEM formatted certificates

Found in: Component config > mbedTLS > Certificates

Enable writing of PEM formatted certificates.

If writing certificate data only in DER format, disabling this option will save some code size.

Default value:

- Yes (enabled)

CONFIG_MBEDTLS_X509_CRL_PARSE_C

X.509 CRL parsing

Found in: Component config > mbedTLS > Certificates

Support for parsing X.509 Certifiificate Revocation Lists.

Default value:

- Yes (enabled)

CONFIG_MBEDTLS_X509_CSR_PARSE_C

X.509 CSR parsing

Found in: Component config > mbedTLS > Certificates

Support for parsing X.509 Certifiificate Signing Requests

Default value:

- Yes (enabled)

CONFIG_MBEDTLS_ECP_C

Elliptic Curve Ciphers

Found in: Component config > mbedTLS

Default value:

- Yes (enabled)

Contains:

- *CONFIG_MBEDTLS_ECDH_C*

- *CONFIG_MBEDTLS_ECJPAKE_C*
- *CONFIG_MBEDTLS_ECP_DP_BP256R1_ENABLED*
- *CONFIG_MBEDTLS_ECP_DP_BP384R1_ENABLED*
- *CONFIG_MBEDTLS_ECP_DP_BP512R1_ENABLED*
- *CONFIG_MBEDTLS_ECP_DP_CURVE25519_ENABLED*
- *CONFIG_MBEDTLS_ECP_DP_SECP192K1_ENABLED*
- *CONFIG_MBEDTLS_ECP_DP_SECP192R1_ENABLED*
- *CONFIG_MBEDTLS_ECP_DP_SECP224K1_ENABLED*
- *CONFIG_MBEDTLS_ECP_DP_SECP224R1_ENABLED*
- *CONFIG_MBEDTLS_ECP_DP_SECP256K1_ENABLED*
- *CONFIG_MBEDTLS_ECP_DP_SECP256R1_ENABLED*
- *CONFIG_MBEDTLS_ECP_DP_SECP384R1_ENABLED*
- *CONFIG_MBEDTLS_ECP_DP_SECP521R1_ENABLED*
- *CONFIG_MBEDTLS_ECP_NIST_OPTIM*

CONFIG_MBEDTLS_ECDH_C

Elliptic Curve Diffie-Hellman (ECDH)

Found in: Component config > mbedTLS > CONFIG_MBEDTLS_ECP_C

Enable ECDH. Needed to use ECDHE-xxx TLS ciphersuites.

Default value:

- Yes (enabled)

CONFIG_MBEDTLS_ECDSA_C

Elliptic Curve DSA

Found in: Component config > mbedTLS > CONFIG_MBEDTLS_ECP_C > CONFIG_MBEDTLS_ECDH_C

Enable ECDSA. Needed to use ECDSA-xxx TLS ciphersuites.

Default value:

- Yes (enabled)

CONFIG_MBEDTLS_ECJPAKE_C

Elliptic curve J-PAKE

Found in: Component config > mbedTLS > CONFIG_MBEDTLS_ECP_C

Enable ECJPAKE. Needed to use ECJPAKE-xxx TLS ciphersuites.

Default value:

- No (disabled)

CONFIG_MBEDTLS_ECP_DP_SECP192R1_ENABLED

Enable SECP192R1 curve

Found in: Component config > mbedTLS > CONFIG_MBEDTLS_ECP_C

Enable support for SECP192R1 Elliptic Curve.

Default value:

- Yes (enabled) if (*CONFIG_MBEDTLS_ATCA_HW_ECDSA_SIGN* || *CONFIG_MBEDTLS_ATCA_HW_ECDSA_VERIFY*) && *CONFIG_MBEDTLS_ECP_C*

CONFIG_MBEDTLS_ECP_DP_SECP224R1_ENABLED

Enable SECP224R1 curve

Found in: Component config > mbedTLS > CONFIG_MBEDTLS_ECP_C

Enable support for SECP224R1 Elliptic Curve.

Default value:

- Yes (enabled) if (*CONFIG_MBEDTLS_ATCA_HW_ECDSA_SIGN* || *CONFIG_MBEDTLS_ATCA_HW_ECDSA_VERIFY*) && *CONFIG_MBEDTLS_ECP_C*

CONFIG_MBEDTLS_ECP_DP_SECP256R1_ENABLED

Enable SECP256R1 curve

Found in: Component config > mbedTLS > CONFIG_MBEDTLS_ECP_C

Enable support for SECP256R1 Elliptic Curve.

Default value:

- Yes (enabled)

CONFIG_MBEDTLS_ECP_DP_SECP384R1_ENABLED

Enable SECP384R1 curve

Found in: Component config > mbedTLS > CONFIG_MBEDTLS_ECP_C

Enable support for SECP384R1 Elliptic Curve.

Default value:

- Yes (enabled) if (*CONFIG_MBEDTLS_ATCA_HW_ECDSA_SIGN* || *CONFIG_MBEDTLS_ATCA_HW_ECDSA_VERIFY*) && *CONFIG_MBEDTLS_ECP_C*

CONFIG_MBEDTLS_ECP_DP_SECP521R1_ENABLED

Enable SECP521R1 curve

Found in: Component config > mbedTLS > CONFIG_MBEDTLS_ECP_C

Enable support for SECP521R1 Elliptic Curve.

Default value:

- Yes (enabled) if (*CONFIG_MBEDTLS_ATCA_HW_ECDSA_SIGN* || *CONFIG_MBEDTLS_ATCA_HW_ECDSA_VERIFY*) && *CONFIG_MBEDTLS_ECP_C*

CONFIG_MBEDTLS_ECP_DP_SECP192K1_ENABLED

Enable SECP192K1 curve

Found in: Component config > mbedTLS > CONFIG_MBEDTLS_ECP_C

Enable support for SECP192K1 Elliptic Curve.

Default value:

- Yes (enabled) if (*CONFIG_MBEDTLS_ATCA_HW_ECDSA_SIGN* || *CONFIG_MBEDTLS_ATCA_HW_ECDSA_VERIFY*) && *CONFIG_MBEDTLS_ECP_C*

CONFIG_MBEDTLS_ECP_DP_SECP224K1_ENABLED

Enable SECP224K1 curve

Found in: Component config > mbedTLS > CONFIG_MBEDTLS_ECP_C

Enable support for SECP224K1 Elliptic Curve.

Default value:

- Yes (enabled) if (*CONFIG_MBEDTLS_ATCA_HW_ECDSA_SIGN* || *CONFIG_MBEDTLS_ATCA_HW_ECDSA_VERIFY*) && *CONFIG_MBEDTLS_ECP_C*

CONFIG_MBEDTLS_ECP_DP_SECP256K1_ENABLED

Enable SECP256K1 curve

Found in: Component config > mbedTLS > CONFIG_MBEDTLS_ECP_C

Enable support for SECP256K1 Elliptic Curve.

Default value:

- Yes (enabled) if (*CONFIG_MBEDTLS_ATCA_HW_ECDSA_SIGN* || *CONFIG_MBEDTLS_ATCA_HW_ECDSA_VERIFY*) && *CONFIG_MBEDTLS_ECP_C*

CONFIG_MBEDTLS_ECP_DP_BP256R1_ENABLED

Enable BP256R1 curve

Found in: Component config > mbedTLS > CONFIG_MBEDTLS_ECP_C

support for DP Elliptic Curve.

Default value:

- Yes (enabled) if (*CONFIG_MBEDTLS_ATCA_HW_ECDSA_SIGN* || *CONFIG_MBEDTLS_ATCA_HW_ECDSA_VERIFY*) && *CONFIG_MBEDTLS_ECP_C*

CONFIG_MBEDTLS_ECP_DP_BP384R1_ENABLED

Enable BP384R1 curve

Found in: Component config > mbedTLS > CONFIG_MBEDTLS_ECP_C

support for DP Elliptic Curve.

Default value:

- Yes (enabled) if (*CONFIG_MBEDTLS_ATCA_HW_ECDSA_SIGN* || *CONFIG_MBEDTLS_ATCA_HW_ECDSA_VERIFY*) && *CONFIG_MBEDTLS_ECP_C*

CONFIG_MBEDTLS_ECP_DP_BP512R1_ENABLED

Enable BP512R1 curve

Found in: Component config > mbedTLS > CONFIG_MBEDTLS_ECP_C

support for DP Elliptic Curve.

Default value:

- Yes (enabled) if (*CONFIG_MBEDTLS_ATCA_HW_ECDSA_SIGN* || *CONFIG_MBEDTLS_ATCA_HW_ECDSA_VERIFY*) && *CONFIG_MBEDTLS_ECP_C*

CONFIG_MBEDTLS_ECP_DP_CURVE25519_ENABLED

Enable CURVE25519 curve

Found in: Component config > mbedTLS > CONFIG_MBEDTLS_ECP_C

Enable support for CURVE25519 Elliptic Curve.

Default value:

- Yes (enabled) if (*CONFIG_MBEDTLS_ATCA_HW_ECDSA_SIGN* || *CONFIG_MBEDTLS_ATCA_HW_ECDSA_VERIFY*) && *CONFIG_MBEDTLS_ECP_C*

CONFIG_MBEDTLS_ECP_NIST_OPTIM

NIST ‘modulo p’ optimisations

Found in: Component config > mbedTLS > CONFIG_MBEDTLS_ECP_C

NIST ‘modulo p’ optimisations increase Elliptic Curve operation performance.

Disabling this option saves some code size.

end of Elliptic Curve options

Default value:

- Yes (enabled)

CONFIG_MBEDTLS_POLY1305_C

Poly1305 MAC algorithm

Found in: Component config > mbedTLS

Enable support for Poly1305 MAC algorithm.

Default value:

- No (disabled)

CONFIG_MBEDTLS_CHACHA20_C

Chacha20 stream cipher

Found in: Component config > mbedTLS

Enable support for Chacha20 stream cipher.

Default value:

- No (disabled)

CONFIG_MBEDTLS_CHACHAPOLY_C

ChaCha20-Poly1305 AEAD algorithm

Found in: Component config > mbedTLS > CONFIG_MBEDTLS_CHACHA20_C

Enable support for ChaCha20-Poly1305 AEAD algorithm.

Default value:

- No (disabled) if *CONFIG_MBEDTLS_CHACHA20_C* && *CONFIG_MBEDTLS_POLY1305_C*

CONFIG_MBEDTLS_HKDF_C

HKDF algorithm (RFC 5869)

Found in: Component config > mbedTLS

Enable support for the Hashed Message Authentication Code (HMAC)-based key derivation function (HKDF).

Default value:

- No (disabled)

CONFIG_MBEDTLS_THREADING_C

Enable the threading abstraction layer

Found in: Component config > mbedTLS

If you do intend to use contexts between threads, you will need to enable this layer to prevent race conditions.

Default value:

- No (disabled)

CONFIG_MBEDTLS_THREADING_ALT

Enable threading alternate implementation

Found in: Component config > mbedTLS > CONFIG_MBEDTLS_THREADING_C

Enable threading alt to allow your own alternate threading implementation.

Default value:

- Yes (enabled) if *CONFIG_MBEDTLS_THREADING_C*

CONFIG_MBEDTLS_THREADING_PTHREAD

Enable threading pthread implementation

Found in: Component config > mbedTLS > CONFIG_MBEDTLS_THREADING_C

Enable the pthread wrapper layer for the threading layer.

Default value:

- No (disabled) if *CONFIG_MBEDTLS_THREADING_C*

CONFIG_MBEDTLS_LARGE_KEY_SOFTWARE_MPI

Fallback to software implementation for larger MPI values

Found in: Component config > mbedTLS

Fallback to software implementation for RSA key lengths larger than SOC_RSA_MAX_BIT_LEN. If this is not active then the ESP will be unable to process keys greater than SOC_RSA_MAX_BIT_LEN.

Default value:

- No (disabled)

CONFIG_MBEDTLS_SECURITY_RISKS

Show configurations with potential security risks

Found in: Component config > mbedTLS

Default value:

- No (disabled)

Contains:

- *CONFIG_MBEDTLS_ALLOW_UNSUPPORTED_CRITICAL_EXT*

CONFIG_MBEDTLS_ALLOW_UNSUPPORTED_CRITICAL_EXT

X.509 CRT parsing with unsupported critical extensions

Found in: Component config > mbedTLS > CONFIG_MBEDTLS_SECURITY_RISKS

Allow the X.509 certificate parser to load certificates with unsupported critical extensions

Default value:

- No (disabled) if *CONFIG_MBEDTLS_SECURITY_RISKS*

mDNS Contains:

- *CONFIG_MDNS_MAX_SERVICES*
- *CONFIG_MDNS_SERVICE_ADD_TIMEOUT_MS*
- *CONFIG_MDNS_STRICT_MODE*
- *CONFIG_MDNS_TASK_AFFINITY*
- *CONFIG_MDNS_TASK_PRIORITY*
- *CONFIG_MDNS_TASK_STACK_SIZE*
- *CONFIG_MDNS_TIMER_PERIOD_MS*

CONFIG_MDNS_MAX_SERVICES

Max number of services

Found in: Component config > mDNS

Services take up a certain amount of memory, and allowing fewer services to be open at the same time conserves memory. Specify the maximum amount of services here. The valid value is from 1 to 64.

Range:

- from 1 to 64

Default value:

- 10

CONFIG_MDNS_TASK_PRIORITY

mDNS task priority

Found in: Component config > mDNS

Allows setting mDNS task priority. Please do not set the task priority higher than priorities of system tasks. Compile time warning/error would be emitted if the chosen task priority were too high.

Range:

- from 1 to 255

Default value:

- 1

CONFIG_MDNS_TASK_STACK_SIZE

mDNS task stack size

Found in: Component config > mDNS

Allows setting mDNS task stacksize.

Default value:

- 4096

CONFIG_MDNS_TASK_AFFINITY

mDNS task affinity

Found in: Component config > mDNS

Allows setting mDNS tasks affinity, i.e. whether the task is pinned to CPU0, pinned to CPU1, or allowed to run on any CPU.

Available options:

- No affinity (MDNS_TASK_AFFINITY_NO_AFFINITY)

- CPU0 (MDNS_TASK_AFFINITY_CPU0)
- CPU1 (MDNS_TASK_AFFINITY_CPU1)

CONFIG_MDNS_SERVICE_ADD_TIMEOUT_MS

mDNS adding service timeout (ms)

Found in: Component config > mDNS

Configures timeout for adding a new mDNS service. Adding a service fails if could not be completed within this time.

Range:
- from 10 to 30000

Default value:
- 2000

CONFIG_MDNS_STRICT_MODE

mDNS strict mode

Found in: Component config > mDNS

Configures strict mode. Set this to 1 for the mDNS library to strictly follow the RFC6762: Currently the only strict feature: Do not repeat original questions in response packets (defined in RFC6762 sec. 6). Default configuration is 0, i.e. non-strict mode, since some implementations, such as lwIP mdns resolver (used by standard POSIX API like getaddrinfo, gethostbyname) could not correctly resolve advertised names.

Default value:
- No (disabled)

CONFIG_MDNS_TIMER_PERIOD_MS

mDNS timer period (ms)

Found in: Component config > mDNS

Configures period of mDNS timer, which periodically transmits packets and schedules mDNS searches.

Range:
- from 10 to 10000

Default value:
- 100

ESP-MQTT Configurations

Contains:

- *CONFIG_MQTT_CUSTOM_OUTBOX*
- *CONFIG_MQTT_TRANSPORT_SSL*
- *CONFIG_MQTT_TRANSPORT_WEBSOCKET*
- *CONFIG_MQTT_PROTOCOL_311*
- *CONFIG_MQTT_TASK_CORE_SELECTION_ENABLED*
- *CONFIG_MQTT_USE_CUSTOM_CONFIG*
- *CONFIG_MQTT_OUTBOX_EXPIRED_TIMEOUT_MS*
- *CONFIG_MQTT_REPORT_DELETED_MESSAGES*
- *CONFIG_MQTT_SKIP_PUBLISH_IF_DISCONNECTED*
- *CONFIG_MQTT_MSG_ID_INCREMENTAL*

CONFIG_MQTT_PROTOCOL_311

Enable MQTT protocol 3.1.1

Found in: Component config > ESP-MQTT Configurations

If not, this library will use MQTT protocol 3.1

Default value:

- Yes (enabled)

CONFIG_MQTT_TRANSPORT_SSL

Enable MQTT over SSL

Found in: Component config > ESP-MQTT Configurations

Enable MQTT transport over SSL with mbedtls

Default value:

- Yes (enabled)

CONFIG_MQTT_TRANSPORT_WEBSOCKET

Enable MQTT over Websocket

Found in: Component config > ESP-MQTT Configurations

Enable MQTT transport over Websocket.

Default value:

- Yes (enabled)

CONFIG_MQTT_TRANSPORT_WEBSOCKET_SECURE

Enable MQTT over Websocket Secure

Found in: Component config > ESP-MQTT Configurations > CONFIG_MQTT_TRANSPORT_WEBSOCKET

Enable MQTT transport over Websocket Secure.

Default value:

- Yes (enabled)

CONFIG_MQTT_MSG_ID_INCREMENTAL

Use Incremental Message Id

Found in: Component config > ESP-MQTT Configurations

Set this to true for the message id (2.3.1 Packet Identifier) to be generated as an incremental number rather then a random value (used by default)

Default value:

- No (disabled)

CONFIG_MQTT_SKIP_PUBLISH_IF_DISCONNECTED

Skip publish if disconnected

Found in: Component config > ESP-MQTT Configurations

Set this to true to avoid publishing (enqueueing messages) if the client is disconnected. The MQTT client tries to publish all messages by default, even in the disconnected state (where the qos1 and qos2 packets are stored in the internal outbox to be published later) The

MQTT_SKIP_PUBLISH_IF_DISCONNECTED option allows applications to override this behaviour and not enqueue publish packets in the disconnected state.

Default value:

- No (disabled)

CONFIG_MQTT_REPORT_DELETED_MESSAGES

Report deleted messages

Found in: Component config > ESP-MQTT Configurations

Set this to true to post events for all messages which were deleted from the outbox before being correctly sent and confirmed.

Default value:

- No (disabled)

CONFIG_MQTT_USE_CUSTOM_CONFIG

MQTT Using custom configurations

Found in: Component config > ESP-MQTT Configurations

Custom MQTT configurations.

Default value:

- No (disabled)

CONFIG_MQTT_TCP_DEFAULT_PORT

Default MQTT over TCP port

Found in: Component config > ESP-MQTT Configurations > CONFIG_MQTT_USE_CUSTOM_CONFIG

Default MQTT over TCP port

Default value:

- 1883 if *CONFIG_MQTT_USE_CUSTOM_CONFIG*

CONFIG_MQTT_SSL_DEFAULT_PORT

Default MQTT over SSL port

Found in: Component config > ESP-MQTT Configurations > CONFIG_MQTT_USE_CUSTOM_CONFIG

Default MQTT over SSL port

Default value:

- 8883 if *CONFIG_MQTT_USE_CUSTOM_CONFIG* && *CONFIG_MQTT_TRANSPORT_SSL*

CONFIG_MQTT_WS_DEFAULT_PORT

Default MQTT over Websocket port

Found in: Component config > ESP-MQTT Configurations > CONFIG_MQTT_USE_CUSTOM_CONFIG

Default MQTT over Websocket port

Default value:

- 80 if *CONFIG_MQTT_USE_CUSTOM_CONFIG* && *CONFIG_MQTT_TRANSPORT_WEBSOCKET*

CONFIG_MQTT_WSS_DEFAULT_PORT

Default MQTT over Websocket Secure port

Found in: Component config > ESP-MQTT Configurations > CONFIG_MQTT_USE_CUSTOM_CONFIG

Default MQTT over Websocket Secure port

Default value:

- 443 if *CONFIG_MQTT_USE_CUSTOM_CONFIG* && *CONFIG_MQTT_TRANSPORT_WEBSOCKET* && *CONFIG_MQTT_TRANSPORT_WEBSOCKET_SECURE*

CONFIG_MQTT_BUFFER_SIZE

Default MQTT Buffer Size

Found in: Component config > ESP-MQTT Configurations > CONFIG_MQTT_USE_CUSTOM_CONFIG

This buffer size using for both transmit and receive

Default value:

- 1024 if *CONFIG_MQTT_USE_CUSTOM_CONFIG*

CONFIG_MQTT_TASK_STACK_SIZE

MQTT task stack size

Found in: Component config > ESP-MQTT Configurations > CONFIG_MQTT_USE_CUSTOM_CONFIG

MQTT task stack size

Default value:

- 6144 if *CONFIG_MQTT_USE_CUSTOM_CONFIG*

CONFIG_MQTT_DISABLE_API_LOCKS

Disable API locks

Found in: Component config > ESP-MQTT Configurations > CONFIG_MQTT_USE_CUSTOM_CONFIG

Default config employs API locks to protect internal structures. It is possible to disable these locks if the user code doesn’ t access MQTT API from multiple concurrent tasks

Default value:

- No (disabled) if *CONFIG_MQTT_USE_CUSTOM_CONFIG*

CONFIG_MQTT_TASK_PRIORITY

MQTT task priority

Found in: Component config > ESP-MQTT Configurations > CONFIG_MQTT_USE_CUSTOM_CONFIG

MQTT task priority. Higher number denotes higher priority.

Default value:

- 5 if *CONFIG_MQTT_USE_CUSTOM_CONFIG*

CONFIG_MQTT_TASK_CORE_SELECTION_ENABLED

Enable MQTT task core selection

Found in: Component config > ESP-MQTT Configurations

This will enable core selection

Default value:

- “false”

CONFIG_MQTT_TASK_CORE_SELECTION

Core to use ?

Found in: Component config > ESP-MQTT Configurations > CONFIG_MQTT_TASK_CORE_SELECTION_ENABLED

Available options:
- Core 0 (MQTT_USE_CORE_0)
- Core 1 (MQTT_USE_CORE_1)

CONFIG_MQTT_CUSTOM_OUTBOX

Enable custom outbox implementation

Found in: Component config > ESP-MQTT Configurations

Set to true if a specific implementation of message outbox is needed (e.g. persistant outbox in NVM or similar).

Default value:
- No (disabled)

CONFIG_MQTT_OUTBOX_EXPIRED_TIMEOUT_MS

Outbox message expired timeout[ms]

Found in: Component config > ESP-MQTT Configurations

Messages which stays in the outbox longer than this value before being published will be discarded.

Default value:
- 30000 if *CONFIG_MQTT_USE_CUSTOM_CONFIG*

Newlib Contains:

- *CONFIG_NEWLIB_NANO_FORMAT*
- *CONFIG_NEWLIB_STDIN_LINE_ENDING*
- *CONFIG_NEWLIB_STDOUT_LINE_ENDING*

CONFIG_NEWLIB_STDOUT_LINE_ENDING

Line ending for UART output

Found in: Component config > Newlib

This option allows configuring the desired line endings sent to UART when a newline ('n', LF) appears on stdout. Three options are possible:

CRLF: whenever LF is encountered, prepend it with CR

LF: no modification is applied, stdout is sent as is

CR: each occurence of LF is replaced with CR

This option doesn't affect behavior of the UART driver (drivers/uart.h).

Available options:
- CRLF (NEWLIB_STDOUT_LINE_ENDING_CRLF)
- LF (NEWLIB_STDOUT_LINE_ENDING_LF)
- CR (NEWLIB_STDOUT_LINE_ENDING_CR)

CONFIG_NEWLIB_STDIN_LINE_ENDING

Line ending for UART input

Found in: Component config > Newlib

This option allows configuring which input sequence on UART produces a newline (‘n’, LF) on stdin. Three options are possible:

CRLF: CRLF is converted to LF

LF: no modification is applied, input is sent to stdin as is

CR: each occurence of CR is replaced with LF

This option doesn’t affect behavior of the UART driver (drivers/uart.h).

Available options:

- CRLF (NEWLIB_STDIN_LINE_ENDING_CRLF)
- LF (NEWLIB_STDIN_LINE_ENDING_LF)
- CR (NEWLIB_STDIN_LINE_ENDING_CR)

CONFIG_NEWLIB_NANO_FORMAT

Enable ‘nano’ formatting options for printf/scanf family

Found in: Component config > Newlib

ESP32 ROM contains parts of newlib C library, including printf/scanf family of functions. These functions have been compiled with so-called “nano” formatting option. This option doesn’t support 64-bit integer formats and C99 features, such as positional arguments.

For more details about “nano” formatting option, please see newlib readme file, search for ‘–enable-newlib-nano-formatted-io’: https://sourceware.org/newlib/README

If this option is enabled, build system will use functions available in ROM, reducing the application binary size. Functions available in ROM run faster than functions which run from flash. Functions available in ROM can also run when flash instruction cache is disabled.

If you need 64-bit integer formatting support or C99 features, keep this option disabled.

Default value:

- No (disabled)

NVS

Contains:

- *CONFIG_NVS_ENCRYPTION*
- *CONFIG_NVS_COMPATIBLE_PRE_V4_3_ENCRYPTION_FLAG*

CONFIG_NVS_ENCRYPTION

Enable NVS encryption

Found in: Component config > NVS

This option enables encryption for NVS. When enabled, AES-XTS is used to encrypt the complete NVS data, except the page headers. It requires XTS encryption keys to be stored in an encrypted partition. This means enabling flash encryption is a pre-requisite for this feature.

Default value:

- Yes (enabled) if *CONFIG_SECURE_FLASH_ENC_ENABLED*

CONFIG_NVS_COMPATIBLE_PRE_V4_3_ENCRYPTION_FLAG

NVS partition encrypted flag compatible with ESP-IDF before v4.3

Found in: Component config > NVS

Enabling this will ignore "encrypted" flag for NVS partitions. NVS encryption scheme is different than hardware flash encryption and hence it is not recommended to have "encrypted" flag for NVS partitions. This was not being checked in pre v4.3 IDF. Hence, if you have any devices where this flag is kept enabled in partition table then enabling this config will allow to have same behavior as pre v4.3 IDF.

OpenSSL

Contains:

- *CONFIG_OPENSSL_DEBUG*
- *CONFIG_OPENSSL_ERROR_STACK*
- *CONFIG_OPENSSL_LOWLEVEL_DEBUG*
- *CONFIG_OPENSSL_DEBUG_LEVEL*
- *CONFIG_OPENSSL_ASSERT*

CONFIG_OPENSSL_DEBUG

Enable OpenSSL debugging

Found in: Component config > OpenSSL

Enable OpenSSL debugging function.

If the option is enabled, "SSL_DEBUG" works.

Default value:

- No (disabled)

CONFIG_OPENSSL_ERROR_STACK

Enable OpenSSL error structure

Found in: Component config > OpenSSL

Enable OpenSSL Error reporting

Default value:

- Yes (enabled)

CONFIG_OPENSSL_DEBUG_LEVEL

OpenSSL debugging level

Found in: Component config > OpenSSL

OpenSSL debugging level.

Only function whose debugging level is higher than "OPENSSL_DEBUG_LEVEL" works.

For example: If OPENSSL_DEBUG_LEVEL = 2, you use function "SSL_DEBUG(1, "malloc failed")". Because 1 < 2, it will not print.

Range:

- from 0 to 255 if *CONFIG_OPENSSL_DEBUG*

Default value:

- 0 if *CONFIG_OPENSSL_DEBUG*

CONFIG_OPENSSL_LOWLEVEL_DEBUG

Enable OpenSSL low-level module debugging

Found in: Component config > OpenSSL

If the option is enabled, low-level module debugging function of OpenSSL is enabled, e.g. mbedtls internal debugging function.

Default value:

- No (disabled) if *CONFIG_OPENSSL_DEBUG*

CONFIG_OPENSSL_ASSERT

Select OpenSSL assert function

Found in: Component config > OpenSSL

OpenSSL function needs "assert" function to check if input parameters are valid.

If you want to use assert debugging function, "OPENSSL_DEBUG" should be enabled.

Available options:

- Do nothing (OPENSSL_ASSERT_DO_NOTHING)
  Do nothing and "SSL_ASSERT" does not work.
- Check and exit (OPENSSL_ASSERT_EXIT)
  Enable assert exiting, it will check and return error code.
- Show debugging message (OPENSSL_ASSERT_DEBUG)
  Enable assert debugging, it will check and show debugging message.
- Show debugging message and exit (OPENSSL_ASSERT_DEBUG_EXIT)
  Enable assert debugging and exiting, it will check, show debugging message and return error code.
- Show debugging message and block (OPENSSL_ASSERT_DEBUG_BLOCK)
  Enable assert debugging and blocking, it will check, show debugging message and block by "while (1);" .

PThreads Contains:

- *CONFIG_PTHREAD_TASK_NAME_DEFAULT*
- *CONFIG_PTHREAD_TASK_CORE_DEFAULT*
- *CONFIG_PTHREAD_TASK_PRIO_DEFAULT*
- *CONFIG_PTHREAD_TASK_STACK_SIZE_DEFAULT*
- *CONFIG_PTHREAD_STACK_MIN*

CONFIG_PTHREAD_TASK_PRIO_DEFAULT

Default task priority

Found in: Component config > PThreads

Priority used to create new tasks with default pthread parameters.

Range:

- from 0 to 255

Default value:

- 5

CONFIG_PTHREAD_TASK_STACK_SIZE_DEFAULT

Default task stack size

Found in: Component config > PThreads

Stack size used to create new tasks with default pthread parameters.

Default value:

- 3072

CONFIG_PTHREAD_STACK_MIN

Minimum allowed pthread stack size

Found in: Component config > PThreads

Minimum allowed pthread stack size set in attributes passed to pthread_create

Default value:

- 768

CONFIG_PTHREAD_TASK_CORE_DEFAULT

Default pthread core affinity

Found in: Component config > PThreads

The default core to which pthreads are pinned.

Available options:

- No affinity (PTHREAD_DEFAULT_CORE_NO_AFFINITY)
- Core 0 (PTHREAD_DEFAULT_CORE_0)
- Core 1 (PTHREAD_DEFAULT_CORE_1)

CONFIG_PTHREAD_TASK_NAME_DEFAULT

Default name of pthreads

Found in: Component config > PThreads

The default name of pthreads.

Default value:

- “pthread”

SPI Flash driver

Contains:

- *Auto-detect flash chips*
- *CONFIG_SPI_FLASH_BYPASS_BLOCK_ERASE*
- *CONFIG_SPI_FLASH_ENABLE_ENCRYPTED_READ_WRITE*
- *CONFIG_SPI_FLASH_ENABLE_COUNTERS*
- *CONFIG_SPI_FLASH_ROM_DRIVER_PATCH*
- *CONFIG_SPI_FLASH_YIELD_DURING_ERASE*
- *CONFIG_SPI_FLASH_CHECK_ERASE_TIMEOUT_DISABLED*
- *CONFIG_SPI_FLASH_WRITE_CHUNK_SIZE*
- *CONFIG_SPI_FLASH_SIZE_OVERRIDE*
- *CONFIG_SPI_FLASH_SHARE_SPI1_BUS*
- *CONFIG_SPI_FLASH_USE_LEGACY_IMPL*
- *CONFIG_SPI_FLASH_VERIFY_WRITE*
- *CONFIG_SPI_FLASH_DANGEROUS_WRITE*

CONFIG_SPI_FLASH_VERIFY_WRITE

Verify SPI flash writes

Found in: Component config > SPI Flash driver

If this option is enabled, any time SPI flash is written then the data will be read back and verified. This can catch hardware problems with SPI flash, or flash which was not erased before verification.

Default value:

- No (disabled)

CONFIG_SPI_FLASH_LOG_FAILED_WRITE

Log errors if verification fails

Found in: Component config > SPI Flash driver > CONFIG_SPI_FLASH_VERIFY_WRITE

If this option is enabled, if SPI flash write verification fails then a log error line will be written with the address, expected & actual values. This can be useful when debugging hardware SPI flash problems.

Default value:

- No (disabled) if *CONFIG_SPI_FLASH_VERIFY_WRITE*

CONFIG_SPI_FLASH_WARN_SETTING_ZERO_TO_ONE

Log warning if writing zero bits to ones

Found in: Component config > SPI Flash driver > CONFIG_SPI_FLASH_VERIFY_WRITE

If this option is enabled, any SPI flash write which tries to set zero bits in the flash to ones will log a warning. Such writes will not result in the requested data appearing identically in flash once written, as SPI NOR flash can only set bits to one when an entire sector is erased. After erasing, individual bits can only be written from one to zero.

Note that some software (such as SPIFFS) which is aware of SPI NOR flash may write one bits as an optimisation, relying on the data in flash becoming a bitwise AND of the new data and any existing data. Such software will log spurious warnings if this option is enabled.

Default value:

- No (disabled) if *CONFIG_SPI_FLASH_VERIFY_WRITE*

CONFIG_SPI_FLASH_ENABLE_COUNTERS

Enable operation counters

Found in: Component config > SPI Flash driver

This option enables the following APIs:

- spi_flash_reset_counters
- spi_flash_dump_counters
- spi_flash_get_counters

These APIs may be used to collect performance data for spi_flash APIs and to help understand behaviour of libraries which use SPI flash.

Default value:

- 0

CONFIG_SPI_FLASH_ROM_DRIVER_PATCH

Enable SPI flash ROM driver patched functions

Found in: Component config > SPI Flash driver

Enable this flag to use patched versions of SPI flash ROM driver functions. This option should be enabled, if any one of the following is true: (1) need to write to flash on ESP32-D2WD; (2) main SPI flash is connected to non-default pins; (3) main SPI flash chip is manufactured by ISSI.

Default value:

- Yes (enabled)

CONFIG_SPI_FLASH_DANGEROUS_WRITE

Writing to dangerous flash regions

Found in: Component config > SPI Flash driver

SPI flash APIs can optionally abort or return a failure code if erasing or writing addresses that fall at the beginning of flash (covering the bootloader and partition table) or that overlap the app partition that contains the running app.

It is not recommended to ever write to these regions from an IDF app, and this check prevents logic errors or corrupted firmware memory from damaging these regions.

Note that this feature *does not* check calls to the esp_rom_xxx SPI flash ROM functions. These functions should not be called directly from IDF applications.

Available options:

- Aborts (SPI_FLASH_DANGEROUS_WRITE_ABORTS)
- Fails (SPI_FLASH_DANGEROUS_WRITE_FAILS)
- Allowed (SPI_FLASH_DANGEROUS_WRITE_ALLOWED)

CONFIG_SPI_FLASH_USE_LEGACY_IMPL

Use the legacy implementation before IDF v4.0

Found in: Component config > SPI Flash driver

The implementation of SPI flash has been greatly changed in IDF v4.0. Enable this option to use the legacy implementation.

Default value:

- No (disabled)

CONFIG_SPI_FLASH_SHARE_SPI1_BUS

Support other devices attached to SPI1 bus

Found in: Component config > SPI Flash driver

Each SPI bus needs a lock for arbitration among devices. This allows multiple devices on a same bus, but may reduce the speed of esp_flash driver access to the main flash chip.

If you only need to use esp_flash driver to access the main flash chip, disable this option, and the lock will be bypassed on SPI1 bus. Otherwise if extra devices are needed to attach to SPI1 bus, enable this option.

Default value:

- No (disabled) if *CONFIG_SPI_FLASH_USE_LEGACY_IMPL*

CONFIG_SPI_FLASH_BYPASS_BLOCK_ERASE

Bypass a block erase and always do sector erase

Found in: Component config > SPI Flash driver

Some flash chips can have very high "max" erase times, especially for block erase (32KB or 64KB). This option allows to bypass "block erase" and always do sector erase commands. This will be much slower overall in most cases, but improves latency for other code to run.

Default value:

- No (disabled)

CONFIG_SPI_FLASH_YIELD_DURING_ERASE

Enables yield operation during flash erase

Found in: Component config > SPI Flash driver

This allows to yield the CPUs between erase commands. Prevents starvation of other tasks.

Default value:

- Yes (enabled)

CONFIG_SPI_FLASH_ERASE_YIELD_DURATION_MS

Duration of erasing to yield CPUs (ms)

Found in: Component config > SPI Flash driver > CONFIG_SPI_FLASH_YIELD_DURING_ERASE

If a duration of one erase command is large then it will yield CPUs after finishing a current command.

Default value:

- 20

CONFIG_SPI_FLASH_ERASE_YIELD_TICKS

CPU release time (tick) for an erase operation

Found in: Component config > SPI Flash driver > CONFIG_SPI_FLASH_YIELD_DURING_ERASE

Defines how many ticks will be before returning to continue a erasing.

Default value:

- 1

CONFIG_SPI_FLASH_WRITE_CHUNK_SIZE

Flash write chunk size

Found in: Component config > SPI Flash driver

Flash write is broken down in terms of multiple (smaller) write operations. This configuration options helps to set individual write chunk size, smaller value here ensures that cache (and non-IRAM resident interrupts) remains disabled for shorter duration.

Range:

- from 256 to 8192

Default value:

- 8192

CONFIG_SPI_FLASH_SIZE_OVERRIDE

Override flash size in bootloader header by ESPTOOLPY_FLASHSIZE

Found in: Component config > SPI Flash driver

SPI Flash driver uses the flash size configured in bootloader header by default. Enable this option to override flash size with latest ESPTOOLPY_FLASHSIZE value from the app header if the size in the bootloader header is incorrect.

Default value:

- No (disabled)

CONFIG_SPI_FLASH_CHECK_ERASE_TIMEOUT_DISABLED

Flash timeout checkout disabled

Found in: Component config > SPI Flash driver

This option is helpful if you are using a flash chip whose timeout is quite large or unpredictable.

Default value:

- No (disabled) if *CONFIG_SPI_FLASH_USE_LEGACY_IMPL*

Auto-detect flash chips Contains:

- *CONFIG_SPI_FLASH_SUPPORT_BOYA_CHIP*
- *CONFIG_SPI_FLASH_SUPPORT_GD_CHIP*
- *CONFIG_SPI_FLASH_SUPPORT_ISSI_CHIP*
- *CONFIG_SPI_FLASH_SUPPORT_MXIC_CHIP*
- *CONFIG_SPI_FLASH_SUPPORT_TH_CHIP*
- *CONFIG_SPI_FLASH_SUPPORT_WINBOND_CHIP*

CONFIG_SPI_FLASH_SUPPORT_ISSI_CHIP

ISSI

Found in: Component config > SPI Flash driver > Auto-detect flash chips

Enable this to support auto detection of ISSI chips if chip vendor not directly given by `chip\_drv` member of the chip struct. This adds support for variant chips, however will extend detecting time.

Default value:

- Yes (enabled)

CONFIG_SPI_FLASH_SUPPORT_MXIC_CHIP

MXIC

Found in: Component config > SPI Flash driver > Auto-detect flash chips

Enable this to support auto detection of MXIC chips if chip vendor not directly given by `chip\_drv` member of the chip struct. This adds support for variant chips, however will extend detecting time.

Default value:

- Yes (enabled)

CONFIG_SPI_FLASH_SUPPORT_GD_CHIP

GigaDevice

Found in: Component config > SPI Flash driver > Auto-detect flash chips

Enable this to support auto detection of GD (GigaDevice) chips if chip vendor not directly given by `chip\_drv` member of the chip struct. If you are using Wrover modules, please don't disable this, otherwise your flash may not work in 4-bit mode.

This adds support for variant chips, however will extend detecting time and image size. Note that the default chip driver supports the GD chips with product ID 60H.

Default value:

- Yes (enabled)

CONFIG_SPI_FLASH_SUPPORT_WINBOND_CHIP

Winbond

Found in: Component config > SPI Flash driver > Auto-detect flash chips

Enable this to support auto detection of Winbond chips if chip vendor not directly given by `chip\_drv` member of the chip struct. This adds support for variant chips, however will extend detecting time.

Default value:

- Yes (enabled)

CONFIG_SPI_FLASH_SUPPORT_BOYA_CHIP

BOYA

Found in: Component config > SPI Flash driver > Auto-detect flash chips

Enable this to support auto detection of BOYA chips if chip vendor not directly given by `chip\_drv` member of the chip struct. This adds support for variant chips, however will extend detecting time.

Default value:

- No (disabled)
- Yes (enabled)

CONFIG_SPI_FLASH_SUPPORT_TH_CHIP

TH

Found in: Component config > SPI Flash driver > Auto-detect flash chips

Enable this to support auto detection of TH chips if chip vendor not directly given by `chip\_drv` member of the chip struct. This adds support for variant chips, however will extend detecting time.

Default value:

- No (disabled)
- Yes (enabled)

CONFIG_SPI_FLASH_ENABLE_ENCRYPTED_READ_WRITE

Enable encrypted partition read/write operations

Found in: Component config > SPI Flash driver

This option enables flash read/write operations to encrypted partition/s. This option is kept enabled irrespective of state of flash encryption feature. However, in case application is not using flash encryption feature and is in need of some additional memory from IRAM region (~1KB) then this config can be disabled.

Default value:

- Yes (enabled)

SPIFFS Configuration

Contains:

- *Debug Configuration*
- *CONFIG_SPIFFS_USE_MAGIC*
- *CONFIG_SPIFFS_GC_STATS*
- *CONFIG_SPIFFS_PAGE_CHECK*
- *CONFIG_SPIFFS_FOLLOW_SYMLINKS*
- *CONFIG_SPIFFS_MAX_PARTITIONS*
- *CONFIG_SPIFFS_USE_MTIME*
- *CONFIG_SPIFFS_GC_MAX_RUNS*
- *CONFIG_SPIFFS_OBJ_NAME_LEN*
- *CONFIG_SPIFFS_META_LENGTH*

- *SPIFFS Cache Configuration*
- *CONFIG_SPIFFS_PAGE_SIZE*
- *CONFIG_SPIFFS_MTIME_WIDE_64_BITS*

CONFIG_SPIFFS_MAX_PARTITIONS

Maximum Number of Partitions

Found in: Component config > SPIFFS Configuration

Define maximum number of partitions that can be mounted.

Range:
- from 1 to 10

Default value:
- 3

SPIFFS Cache Configuration Contains:

- *CONFIG_SPIFFS_CACHE*

CONFIG_SPIFFS_CACHE

Enable SPIFFS Cache

Found in: Component config > SPIFFS Configuration > SPIFFS Cache Configuration

Enables/disable memory read caching of nucleus file system operations.

Default value:
- Yes (enabled)

CONFIG_SPIFFS_CACHE_WR

Enable SPIFFS Write Caching

Found in: Component config > SPIFFS Configuration > SPIFFS Cache Configuration > CONFIG_SPIFFS_CACHE

Enables memory write caching for file descriptors in hydrogen.

Default value:
- Yes (enabled)

CONFIG_SPIFFS_CACHE_STATS

Enable SPIFFS Cache Statistics

Found in: Component config > SPIFFS Configuration > SPIFFS Cache Configuration > CONFIG_SPIFFS_CACHE

Enable/disable statistics on caching. Debug/test purpose only.

Default value:
- No (disabled)

CONFIG_SPIFFS_PAGE_CHECK

Enable SPIFFS Page Check

Found in: Component config > SPIFFS Configuration

Always check header of each accessed page to ensure consistent state. If enabled it will increase number of reads from flash, especially if cache is disabled.

Default value:
- Yes (enabled)

CONFIG_SPIFFS_GC_MAX_RUNS

Set Maximum GC Runs

Found in: Component config > SPIFFS Configuration

Define maximum number of GC runs to perform to reach desired free pages.

Range:
- from 1 to 255

Default value:
- 10

CONFIG_SPIFFS_GC_STATS

Enable SPIFFS GC Statistics

Found in: Component config > SPIFFS Configuration

Enable/disable statistics on gc. Debug/test purpose only.

Default value:
- No (disabled)

CONFIG_SPIFFS_PAGE_SIZE

SPIFFS logical page size

Found in: Component config > SPIFFS Configuration

Logical page size of SPIFFS partition, in bytes. Must be multiple of flash page size (which is usually 256 bytes). Larger page sizes reduce overhead when storing large files, and improve filesystem performance when reading large files. Smaller page sizes reduce overhead when storing small (< page size) files.

Range:
- from 256 to 1024

Default value:
- 256

CONFIG_SPIFFS_OBJ_NAME_LEN

Set SPIFFS Maximum Name Length

Found in: Component config > SPIFFS Configuration

Object name maximum length. Note that this length include the zero-termination character, meaning maximum string of characters can at most be SPIFFS_OBJ_NAME_LEN - 1.

SPIFFS_OBJ_NAME_LEN + SPIFFS_META_LENGTH should not exceed SPIFFS_PAGE_SIZE - 64.

Range:
- from 1 to 256

Default value:
- 32

CONFIG_SPIFFS_FOLLOW_SYMLINKS

Enable symbolic links for image creation

Found in: Component config > SPIFFS Configuration

If this option is enabled, symbolic links are taken into account during partition image creation.

Default value:

- No (disabled)

CONFIG_SPIFFS_USE_MAGIC

Enable SPIFFS Filesystem Magic

Found in: Component config > SPIFFS Configuration

Enable this to have an identifiable spiffs filesystem. This will look for a magic in all sectors to determine if this is a valid spiffs system or not at mount time.

Default value:

- Yes (enabled)

CONFIG_SPIFFS_USE_MAGIC_LENGTH

Enable SPIFFS Filesystem Length Magic

Found in: Component config > SPIFFS Configuration > CONFIG_SPIFFS_USE_MAGIC

If this option is enabled, the magic will also be dependent on the length of the filesystem. For example, a filesystem configured and formatted for 4 megabytes will not be accepted for mounting with a configuration defining the filesystem as 2 megabytes.

Default value:

- Yes (enabled)

CONFIG_SPIFFS_META_LENGTH

Size of per-file metadata field

Found in: Component config > SPIFFS Configuration

This option sets the number of extra bytes stored in the file header. These bytes can be used in an application-specific manner. Set this to at least 4 bytes to enable support for saving file modification time.

SPIFFS_OBJ_NAME_LEN + SPIFFS_META_LENGTH should not exceed SPIFFS_PAGE_SIZE - 64.

Default value:

- 4

CONFIG_SPIFFS_USE_MTIME

Save file modification time

Found in: Component config > SPIFFS Configuration

If enabled, then the first 4 bytes of per-file metadata will be used to store file modification time (mtime), accessible through stat/fstat functions. Modification time is updated when the file is opened.

Default value:

- Yes (enabled)

CONFIG_SPIFFS_MTIME_WIDE_64_BITS

The time field occupies 64 bits in the image instead of 32 bits

Found in: Component config > SPIFFS Configuration

If this option is not set, the time field is 32 bits (up to 2106 year), otherwise it is 64 bits and make sure it matches SPIFFS_META_LENGTH. If the chip already has the spiffs image with the time field = 32 bits then this option cannot be applied in this case. Erase it first before using this option. To resolve the Y2K38 problem for the spiffs, use a toolchain with support time_t 64 bits (see SDK_TOOLCHAIN_SUPPORTS_TIME_WIDE_64_BITS).

Default value:

- No (disabled) if *CONFIG_SPIFFS_META_LENGTH* >= 8

Debug Configuration Contains:

- *CONFIG_SPIFFS_DBG*
- *CONFIG_SPIFFS_API_DBG*
- *CONFIG_SPIFFS_CACHE_DBG*
- *CONFIG_SPIFFS_CHECK_DBG*
- *CONFIG_SPIFFS_TEST_VISUALISATION*
- *CONFIG_SPIFFS_GC_DBG*

CONFIG_SPIFFS_DBG

Enable general SPIFFS debug

Found in: Component config > SPIFFS Configuration > Debug Configuration

Enabling this option will print general debug mesages to the console.

Default value:

- No (disabled)

CONFIG_SPIFFS_API_DBG

Enable SPIFFS API debug

Found in: Component config > SPIFFS Configuration > Debug Configuration

Enabling this option will print API debug mesages to the console.

Default value:

- No (disabled)

CONFIG_SPIFFS_GC_DBG

Enable SPIFFS Garbage Cleaner debug

Found in: Component config > SPIFFS Configuration > Debug Configuration

Enabling this option will print GC debug mesages to the console.

Default value:

- No (disabled)

CONFIG_SPIFFS_CACHE_DBG

Enable SPIFFS Cache debug

Found in: Component config > SPIFFS Configuration > Debug Configuration

Enabling this option will print cache debug mesages to the console.

Default value:

- No (disabled)

CONFIG_SPIFFS_CHECK_DBG

Enable SPIFFS Filesystem Check debug

Found in: Component config > SPIFFS Configuration > Debug Configuration

Enabling this option will print Filesystem Check debug mesages to the console.

Default value:

- No (disabled)

CONFIG_SPIFFS_TEST_VISUALISATION

Enable SPIFFS Filesystem Visualization

Found in: Component config > SPIFFS Configuration > Debug Configuration

Enable this option to enable SPIFFS_vis function in the API.

Default value:

- No (disabled)

TCP Transport

Contains:

- *Websocket*

Websocket

Contains:

- *CONFIG_WS_TRANSPORT*

CONFIG_WS_TRANSPORT

Enable Websocket Transport

Found in: Component config > TCP Transport > Websocket

Enable support for creating websocket transport.

Default value:

- Yes (enabled)

CONFIG_WS_BUFFER_SIZE

Websocket transport buffer size

Found in: Component config > TCP Transport > Websocket > CONFIG_WS_TRANSPORT

Size of the buffer used for constructing the HTTP Upgrade request during connect

Default value:

- 1024

TinyUSB

Unity unit testing library Contains:

- *CONFIG_UNITY_ENABLE_COLOR*
- *CONFIG_UNITY_ENABLE_IDF_TEST_RUNNER*
- *CONFIG_UNITY_ENABLE_FIXTURE*
- *CONFIG_UNITY_ENABLE_BACKTRACE_ON_FAIL*
- *CONFIG_UNITY_ENABLE_DOUBLE*
- *CONFIG_UNITY_ENABLE_FLOAT*

CONFIG_UNITY_ENABLE_FLOAT

Support for float type

Found in: Component config > Unity unit testing library

If not set, assertions on float arguments will not be available.

Default value:

- Yes (enabled)

CONFIG_UNITY_ENABLE_DOUBLE

Support for double type

Found in: Component config > Unity unit testing library

If not set, assertions on double arguments will not be available.

Default value:

- Yes (enabled)

CONFIG_UNITY_ENABLE_COLOR

Colorize test output

Found in: Component config > Unity unit testing library

If set, Unity will colorize test results using console escape sequences.

Default value:

- No (disabled)

CONFIG_UNITY_ENABLE_IDF_TEST_RUNNER

Include ESP-IDF test registration/running helpers

Found in: Component config > Unity unit testing library

If set, then the following features will be available:

- TEST_CASE macro which performs automatic registration of test functions
- Functions to run registered test functions: unity_run_all_tests, unity_run_tests_with_filter, unity_run_single_test_by_name.
- Interactive menu which lists test cases and allows choosing the tests to be run, available via unity_run_menu function.

Disable if a different test registration mechanism is used.

Default value:

- Yes (enabled)

CONFIG_UNITY_ENABLE_FIXTURE

Include Unity test fixture

Found in: Component config > Unity unit testing library

If set, unity_fixture.h header file and associated source files are part of the build. These provide an optional set of macros and functions to implement test groups.

Default value:

- No (disabled)

CONFIG_UNITY_ENABLE_BACKTRACE_ON_FAIL

Print a backtrace when a unit test fails

Found in: Component config > Unity unit testing library

If set, the unity framework will print the backtrace information before jumping back to the test menu. The jumping is usually occurs in assert functions such as TEST_ASSERT, TEST_FAIL etc.

Default value:

- No (disabled)

Virtual file system Contains:

- *CONFIG_VFS_SUPPORT_IO*

CONFIG_VFS_SUPPORT_IO

Provide basic I/O functions

Found in: Component config > Virtual file system

If enabled, the following functions are provided by the VFS component.

open, close, read, write, pread, pwrite, lseek, fstat, fsync, ioctl, fcntl

Filesystem drivers can then be registered to handle these functions for specific paths.

Disabling this option can save memory when the support for these functions is not required.

Default value:

- Yes (enabled)

CONFIG_VFS_SUPPORT_DIR

Provide directory related functions

Found in: Component config > Virtual file system > CONFIG_VFS_SUPPORT_IO

If enabled, the following functions are provided by the VFS component.

stat, link, unlink, rename, utime, access, truncate, rmdir, mkdir, opendir, closedir, readdir, readdir_r, seekdir, telldir, rewinddir

Filesystem drivers can then be registered to handle these functions for specific paths.

Disabling this option can save memory when the support for these functions is not required.

Default value:

- Yes (enabled)

CONFIG_VFS_SUPPORT_SELECT

Provide select function

Found in: Component config > Virtual file system > CONFIG_VFS_SUPPORT_IO

If enabled, select function is provided by the VFS component, and can be used on peripheral file descriptors (such as UART) and sockets at the same time.

If disabled, the default select implementation will be provided by LWIP for sockets only.

Disabling this option can reduce code size if support for "select" on UART file descriptors is not required.

Default value:

- Yes (enabled) if *CONFIG_VFS_SUPPORT_IO* && *CONFIG_LWIP_USE_ONLY_LWIP_SELECT*

CONFIG_VFS_SUPPRESS_SELECT_DEBUG_OUTPUT

Suppress select() related debug outputs

Found in: Component config > Virtual file system > CONFIG_VFS_SUPPORT_IO > CONFIG_VFS_SUPPORT_SELECT

Select() related functions might produce an unconveniently lot of debug outputs when one sets the default log level to DEBUG or higher. It is possible to suppress these debug outputs by enabling this option.

Default value:

- Yes (enabled)

CONFIG_VFS_SUPPORT_TERMIOS

Provide termios.h functions

Found in: Component config > Virtual file system > CONFIG_VFS_SUPPORT_IO

Disabling this option can save memory when the support for termios.h is not required.

Default value:

- Yes (enabled)

Host File System I/O (Semihosting)

Contains:

- *CONFIG_VFS_SEMIHOSTFS_MAX_MOUNT_POINTS*
- *CONFIG_VFS_SEMIHOSTFS_HOST_PATH_MAX_LEN*

CONFIG_VFS_SEMIHOSTFS_MAX_MOUNT_POINTS

Host FS: Maximum number of the host filesystem mount points

Found in: Component config > Virtual file system > CONFIG_VFS_SUPPORT_IO > Host File System I/O (Semihosting)

Define maximum number of host filesystem mount points.

Default value:

- 1

CONFIG_VFS_SEMIHOSTFS_HOST_PATH_MAX_LEN

Host FS: Maximum path length for the host base directory

Found in: Component config > Virtual file system > CONFIG_VFS_SUPPORT_IO > Host File System I/O (Semihosting)

Define maximum path length for the host base directory which is to be mounted. If host path passed to esp_vfs_semihost_register() is longer than this value it will be truncated.

Default value:

- 128

Wear Levelling

Contains:

- *CONFIG_WL_SECTOR_MODE*
- *CONFIG_WL_SECTOR_SIZE*

CONFIG_WL_SECTOR_SIZE

Wear Levelling library sector size

Found in: Component config > Wear Levelling

Sector size used by wear levelling library. You can set default sector size or size that will fit to the flash device sector size.

With sector size set to 4096 bytes, wear levelling library is more efficient. However if FAT filesystem is used on top of wear levelling library, it will need more temporary storage: 4096 bytes for each mounted filesystem and 4096 bytes for each opened file.

With sector size set to 512 bytes, wear levelling library will perform more operations with flash memory, but less RAM will be used by FAT filesystem library (512 bytes for the filesystem and 512 bytes for each file opened).

Available options:

- 512 (WL_SECTOR_SIZE_512)
- 4096 (WL_SECTOR_SIZE_4096)

CONFIG_WL_SECTOR_MODE

Sector store mode

Found in: Component config > Wear Levelling

Specify the mode to store data into flash:

- In Performance mode a data will be stored to the RAM and then stored back to the flash. Compared to the Safety mode, this operation is faster, but if power will be lost when erase sector operation is in progress, then the data from complete flash device sector will be lost.
- In Safety mode data from complete flash device sector will be read from flash, modified, and then stored back to flash. Compared to the Performance mode, this operation is slower, but if power is lost during erase sector operation, then the data from full flash device sector will not be lost.

Available options:

- Perfomance (WL_SECTOR_MODE_PERF)
- Safety (WL_SECTOR_MODE_SAFE)

Wi-Fi Provisioning Manager

Contains:

- *CONFIG_WIFI_PROV_BLE_BONDING*
- *CONFIG_WIFI_PROV_BLE_SEC_CONN*
- *CONFIG_WIFI_PROV_BLE_FORCE_ENCRYPTION*
- *CONFIG_WIFI_PROV_SCAN_MAX_ENTRIES*

- *CONFIG_WIFI_PROV_AUTOSTOP_TIMEOUT*

CONFIG_WIFI_PROV_SCAN_MAX_ENTRIES

Max Wi-Fi Scan Result Entries

Found in: Component config > Wi-Fi Provisioning Manager

This sets the maximum number of entries of Wi-Fi scan results that will be kept by the provisioning manager

Range:
- from 1 to 255

Default value:
- 16

CONFIG_WIFI_PROV_AUTOSTOP_TIMEOUT

Provisioning auto-stop timeout

Found in: Component config > Wi-Fi Provisioning Manager

Time (in seconds) after which the Wi-Fi provisioning manager will auto-stop after connecting to a Wi-Fi network successfully.

Range:
- from 5 to 600

Default value:
- 30

CONFIG_WIFI_PROV_BLE_BONDING

Enable BLE bonding

Found in: Component config > Wi-Fi Provisioning Manager

This option is applicable only when provisioning transport is BLE.

CONFIG_WIFI_PROV_BLE_SEC_CONN

Enable BLE Secure connection flag

Found in: Component config > Wi-Fi Provisioning Manager

Used to enable Secure connection support when provisioning transport is BLE.

Default value:
- Yes (enabled) if BT_NIMBLE_ENABLED

CONFIG_WIFI_PROV_BLE_FORCE_ENCRYPTION

Force Link Encryption during characteristic Read / Write

Found in: Component config > Wi-Fi Provisioning Manager

Used to enforce link encryption when attempting to read / write characteristic

Supplicant Contains:

- *CONFIG_WPA_TESTING_OPTIONS*
- *CONFIG_WPA_11KV_SUPPORT*
- *CONFIG_WPA_DPP_SUPPORT*
- *CONFIG_WPA_WAPI_PSK*

- *CONFIG_WPA_DEBUG_PRINT*
- *CONFIG_WPA_WPS_STRICT*
- *CONFIG_WPA_MBEDTLS_CRYPTO*

CONFIG_WPA_MBEDTLS_CRYPTO

Use MbedTLS crypto APIs

Found in: Component config > Supplicant

Select this option to use MbedTLS crypto APIs which utilize hardware acceleration.

Default value:

- Yes (enabled)

CONFIG_WPA_WAPI_PSK

Enable WAPI PSK support

Found in: Component config > Supplicant

Select this option to enable WAPI-PSK which is a Chinese National Standard Encryption for Wireless LANs (GB 15629.11-2003).

Default value:

- No (disabled)

CONFIG_WPA_DEBUG_PRINT

Print debug messages from WPA Supplicant

Found in: Component config > Supplicant

Select this option to print logging information from WPA supplicant, this includes handshake information and key hex dumps depending on the project logging level.

Enabling this could increase the build size ~60kb depending on the project logging level.

Default value:

- No (disabled)

CONFIG_WPA_TESTING_OPTIONS

Add DPP testing code

Found in: Component config > Supplicant

Select this to enable unity test for DPP.

Default value:

- No (disabled)

CONFIG_WPA_WPS_STRICT

Strictly validate all WPS attributes

Found in: Component config > Supplicant

Select this option to enable validate each WPS attribute rigorously. Disabling this add the workaorunds with various APs. Enabling this may cause inter operability issues with some APs.

Default value:

- No (disabled)

CONFIG_WPA_11KV_SUPPORT

Enable 802.11k, 802.11v APIs handling

Found in: Component config > Supplicant

Select this option to enable 802.11k 802.11v APIs(RRM and BTM support). Only APIs which are helpful for network assisted roaming are supported for now. Enable this option with BTM and RRM enabled in sta config to make device ready for network assisted roaming. BTM: BSS transition management enables an AP to request a station to transition to a specific AP, or to indicate to a station a set of preferred APs. RRM: Radio measurements enable STAs to understand the radio environment, it enables STAs to observe and gather data on radio link performance and on the radio environment. Current implementation adds beacon report, link measurement, neighbor report.

Default value:

- No (disabled)

CONFIG_WPA_SCAN_CACHE

Keep scan results in cache

Found in: Component config > Supplicant > CONFIG_WPA_11KV_SUPPORT

Keep scan results in cache, if not enabled, those will be flushed immediately.

Default value:

- No (disabled) if *CONFIG_WPA_11KV_SUPPORT*

CONFIG_WPA_DPP_SUPPORT

Enable DPP support

Found in: Component config > Supplicant

Select this option to enable WiFi Easy Connect Support.

Default value:

- No (disabled)

Compatibility options

Contains:

- *CONFIG_LEGACY_INCLUDE_COMMON_HEADERS*

CONFIG_LEGACY_INCLUDE_COMMON_HEADERS

Include headers across components as before IDF v4.0

Found in: Compatibility options

Soc, esp32, and driver components, the most common components. Some header of these components are included implicitly by headers of other components before IDF v4.0. It’ s not required for high-level components, but still included through long header chain everywhere.

This is harmful to the modularity. So it’ s changed in IDF v4.0.

You can still include these headers in a legacy way until it is totally deprecated by enable this option.

Default value:

- No (disabled)

Deprecated options and their replacements

- CONFIG_A2DP_ENABLE (*CONFIG_BT_A2DP_ENABLE*)
- **CONFIG_A2D_INITIAL_TRACE_LEVEL (*CONFIG_BT_LOG_A2D_TRACE_LEVEL*)**
  - CONFIG_A2D_TRACE_LEVEL_NONE
  - CONFIG_A2D_TRACE_LEVEL_ERROR
  - CONFIG_A2D_TRACE_LEVEL_WARNING
  - CONFIG_A2D_TRACE_LEVEL_API
  - CONFIG_A2D_TRACE_LEVEL_EVENT
  - CONFIG_A2D_TRACE_LEVEL_DEBUG
  - CONFIG_A2D_TRACE_LEVEL_VERBOSE
- CONFIG_ADC2_DISABLE_DAC (*CONFIG_ADC_DISABLE_DAC*)
- **CONFIG_APPL_INITIAL_TRACE_LEVEL (*CONFIG_BT_LOG_APPL_TRACE_LEVEL*)**
  - CONFIG_APPL_TRACE_LEVEL_NONE
  - CONFIG_APPL_TRACE_LEVEL_ERROR
  - CONFIG_APPL_TRACE_LEVEL_WARNING
  - CONFIG_APPL_TRACE_LEVEL_API
  - CONFIG_APPL_TRACE_LEVEL_EVENT
  - CONFIG_APPL_TRACE_LEVEL_DEBUG
  - CONFIG_APPL_TRACE_LEVEL_VERBOSE
- CONFIG_APP_ANTI_ROLLBACK (*CONFIG_BOOTLOADER_APP_ANTI_ROLLBACK*)
- CONFIG_APP_ROLLBACK_ENABLE (*CONFIG_BOOTLOADER_APP_ROLLBACK_ENABLE*)
- CONFIG_APP_SECURE_VERSION (*CONFIG_BOOTLOADER_APP_SECURE_VERSION*)
- CONFIG_APP_SECURE_VERSION_SIZE_EFUSE_FIELD (*CONFIG_BOOTLOADER_APP_SEC_VER_SIZE_EFUSE_FIEL*
- **CONFIG_AVCT_INITIAL_TRACE_LEVEL (*CONFIG_BT_LOG_AVCT_TRACE_LEVEL*)**
  - CONFIG_AVCT_TRACE_LEVEL_NONE
  - CONFIG_AVCT_TRACE_LEVEL_ERROR
  - CONFIG_AVCT_TRACE_LEVEL_WARNING
  - CONFIG_AVCT_TRACE_LEVEL_API
  - CONFIG_AVCT_TRACE_LEVEL_EVENT
  - CONFIG_AVCT_TRACE_LEVEL_DEBUG
  - CONFIG_AVCT_TRACE_LEVEL_VERBOSE
- **CONFIG_AVDT_INITIAL_TRACE_LEVEL (*CONFIG_BT_LOG_AVDT_TRACE_LEVEL*)**
  - CONFIG_AVDT_TRACE_LEVEL_NONE
  - CONFIG_AVDT_TRACE_LEVEL_ERROR
  - CONFIG_AVDT_TRACE_LEVEL_WARNING
  - CONFIG_AVDT_TRACE_LEVEL_API
  - CONFIG_AVDT_TRACE_LEVEL_EVENT
  - CONFIG_AVDT_TRACE_LEVEL_DEBUG
  - CONFIG_AVDT_TRACE_LEVEL_VERBOSE
- **CONFIG_AVRC_INITIAL_TRACE_LEVEL (*CONFIG_BT_LOG_AVRC_TRACE_LEVEL*)**
  - CONFIG_AVRC_TRACE_LEVEL_NONE
  - CONFIG_AVRC_TRACE_LEVEL_ERROR
  - CONFIG_AVRC_TRACE_LEVEL_WARNING
  - CONFIG_AVRC_TRACE_LEVEL_API
  - CONFIG_AVRC_TRACE_LEVEL_EVENT
  - CONFIG_AVRC_TRACE_LEVEL_DEBUG
  - CONFIG_AVRC_TRACE_LEVEL_VERBOSE
- CONFIG_BLE_ACTIVE_SCAN_REPORT_ADV_SCAN_RSP_INDIVIDUALLY (*CONFIG_BT_BLE_ACT_SCAN_REP_ADV_SCAN*)
- CONFIG_BLE_ESTABLISH_LINK_CONNECTION_TIMEOUT (*CONFIG_BT_BLE_ESTAB_LINK_CONN_TOUT*)
- CONFIG_BLE_HOST_QUEUE_CONGESTION_CHECK (*CONFIG_BT_BLE_HOST_QUEUE_CONG_CHECK*)
- CONFIG_BLE_MESH_GATT_PROXY (*CONFIG_BLE_MESH_GATT_PROXY_SERVER*)
- CONFIG_BLE_SMP_ENABLE (*CONFIG_BT_BLE_SMP_ENABLE*)
- CONFIG_BLUEDROID_MEM_DEBUG (*CONFIG_BT_BLUEDROID_MEM_DEBUG*)
- **CONFIG_BLUEDROID_PINNED_TO_CORE_CHOICE (*CONFIG_BT_BLUEDROID_PINNED_TO_CORE_CHOICE*)**

  - CONFIG_BLUEDROID_PINNED_TO_CORE_0
  - CONFIG_BLUEDROID_PINNED_TO_CORE_1
- **CONFIG_BLUFI_INITIAL_TRACE_LEVEL** (*CONFIG_BT_LOG_BLUFI_TRACE_LEVEL*)
  - CONFIG_BLUFI_TRACE_LEVEL_NONE
  - CONFIG_BLUFI_TRACE_LEVEL_ERROR
  - CONFIG_BLUFI_TRACE_LEVEL_WARNING
  - CONFIG_BLUFI_TRACE_LEVEL_API
  - CONFIG_BLUFI_TRACE_LEVEL_EVENT
  - CONFIG_BLUFI_TRACE_LEVEL_DEBUG
  - CONFIG_BLUFI_TRACE_LEVEL_VERBOSE
- CONFIG_BNEP_INITIAL_TRACE_LEVEL (*CONFIG_BT_LOG_BNEP_TRACE_LEVEL*)
- CONFIG_BROWNOUT_DET (*CONFIG_ESP32_BROWNOUT_DET*)
- **CONFIG_BROWNOUT_DET_LVL_SEL** (*CONFIG_ESP32_BROWNOUT_DET_LVL_SEL*)
  - CONFIG_BROWNOUT_DET_LVL_SEL_0
  - CONFIG_BROWNOUT_DET_LVL_SEL_1
  - CONFIG_BROWNOUT_DET_LVL_SEL_2
  - CONFIG_BROWNOUT_DET_LVL_SEL_3
  - CONFIG_BROWNOUT_DET_LVL_SEL_4
  - CONFIG_BROWNOUT_DET_LVL_SEL_5
  - CONFIG_BROWNOUT_DET_LVL_SEL_6
  - CONFIG_BROWNOUT_DET_LVL_SEL_7
- **CONFIG_BTC_INITIAL_TRACE_LEVEL** (*CONFIG_BT_LOG_BTC_TRACE_LEVEL*)
  - CONFIG_BTC_TRACE_LEVEL_NONE
  - CONFIG_BTC_TRACE_LEVEL_ERROR
  - CONFIG_BTC_TRACE_LEVEL_WARNING
  - CONFIG_BTC_TRACE_LEVEL_API
  - CONFIG_BTC_TRACE_LEVEL_EVENT
  - CONFIG_BTC_TRACE_LEVEL_DEBUG
  - CONFIG_BTC_TRACE_LEVEL_VERBOSE
- CONFIG_BTC_TASK_STACK_SIZE (*CONFIG_BT_BTC_TASK_STACK_SIZE*)
- **CONFIG_BTH_LOG_SDP_INITIAL_TRACE_LEVEL** (*CONFIG_BT_LOG_SDP_TRACE_LEVEL*)
  - CONFIG_SDP_TRACE_LEVEL_NONE
  - CONFIG_SDP_TRACE_LEVEL_ERROR
  - CONFIG_SDP_TRACE_LEVEL_WARNING
  - CONFIG_SDP_TRACE_LEVEL_API
  - CONFIG_SDP_TRACE_LEVEL_EVENT
  - CONFIG_SDP_TRACE_LEVEL_DEBUG
  - CONFIG_SDP_TRACE_LEVEL_VERBOSE
- **CONFIG_BTIF_INITIAL_TRACE_LEVEL** (*CONFIG_BT_LOG_BTIF_TRACE_LEVEL*)
  - CONFIG_BTIF_TRACE_LEVEL_NONE
  - CONFIG_BTIF_TRACE_LEVEL_ERROR
  - CONFIG_BTIF_TRACE_LEVEL_WARNING
  - CONFIG_BTIF_TRACE_LEVEL_API
  - CONFIG_BTIF_TRACE_LEVEL_EVENT
  - CONFIG_BTIF_TRACE_LEVEL_DEBUG
  - CONFIG_BTIF_TRACE_LEVEL_VERBOSE
- **CONFIG_BTM_INITIAL_TRACE_LEVEL** (*CONFIG_BT_LOG_BTM_TRACE_LEVEL*)
  - CONFIG_BTM_TRACE_LEVEL_NONE
  - CONFIG_BTM_TRACE_LEVEL_ERROR
  - CONFIG_BTM_TRACE_LEVEL_WARNING
  - CONFIG_BTM_TRACE_LEVEL_API
  - CONFIG_BTM_TRACE_LEVEL_EVENT
  - CONFIG_BTM_TRACE_LEVEL_DEBUG
  - CONFIG_BTM_TRACE_LEVEL_VERBOSE
- CONFIG_BTU_TASK_STACK_SIZE (*CONFIG_BT_BTU_TASK_STACK_SIZE*)
- CONFIG_CLASSIC_BT_ENABLED (*CONFIG_BT_CLASSIC_ENABLED*)
- CONFIG_COMPATIBLE_PRE_V2_1_BOOTLOADERS (*CONFIG_ESP32_COMPATIBLE_PRE_V2_1_BOOTLOADERS*)
- **CONFIG_CONSOLE_UART** (*CONFIG_ESP_CONSOLE_UART*)

  - CONFIG_CONSOLE_UART_DEFAULT
  - CONFIG_CONSOLE_UART_CUSTOM
  - CONFIG_ESP_CONSOLE_UART_NONE
- CONFIG_CONSOLE_UART_BAUDRATE (*CONFIG_ESP_CONSOLE_UART_BAUDRATE*)
- **CONFIG_CONSOLE_UART_NUM (*CONFIG_ESP_CONSOLE_UART_NUM*)**
  - CONFIG_CONSOLE_UART_CUSTOM_NUM_0
  - CONFIG_CONSOLE_UART_CUSTOM_NUM_1
- CONFIG_CONSOLE_UART_RX_GPIO (*CONFIG_ESP_CONSOLE_UART_RX_GPIO*)
- CONFIG_CONSOLE_UART_TX_GPIO (*CONFIG_ESP_CONSOLE_UART_TX_GPIO*)
- CONFIG_CXX_EXCEPTIONS (*CONFIG_COMPILER_CXX_EXCEPTIONS*)
- CONFIG_CXX_EXCEPTIONS_EMG_POOL_SIZE (*CONFIG_COMPILER_CXX_EXCEPTIONS_EMG_POOL_SIZE*)
- CONFIG_DISABLE_BASIC_ROM_CONSOLE (*CONFIG_ESP32_DISABLE_BASIC_ROM_CONSOLE*)
- CONFIG_DISABLE_GCC8_WARNINGS (*CONFIG_COMPILER_DISABLE_GCC8_WARNINGS*)
- CONFIG_EFUSE_SECURE_VERSION_EMULATE (*CONFIG_BOOTLOADER_EFUSE_SECURE_VERSION_EMULATE*)
- CONFIG_ENABLE_STATIC_TASK_CLEAN_UP_HOOK (*CONFIG_FREERTOS_ENABLE_STATIC_TASK_CLEAN_UP*)
- CONFIG_ESP32S2_ALLOW_RTC_FAST_MEM_AS_HEAP (*CONFIG_ESP_SYSTEM_ALLOW_RTC_FAST_MEM_AS_HEA*
- **CONFIG_ESP32S2_PANIC (*CONFIG_ESP_SYSTEM_PANIC*)**
  - CONFIG_ESP32S2_PANIC_PRINT_HALT
  - CONFIG_ESP32S2_PANIC_PRINT_REBOOT
  - CONFIG_ESP32S2_PANIC_SILENT_REBOOT
  - CONFIG_ESP32S2_PANIC_GDBSTUB
- CONFIG_ESP32_ALLOW_RTC_FAST_MEM_AS_HEAP (*CONFIG_ESP_SYSTEM_ALLOW_RTC_FAST_MEM_AS_HEAP*)
- **CONFIG_ESP32_APPTRACE_DESTINATION (*CONFIG_APPTRACE_DESTINATION*)**
  - CONFIG_ESP32_APPTRACE_DEST_TRAX
  - CONFIG_ESP32_APPTRACE_DEST_NONE
- CONFIG_ESP32_APPTRACE_ONPANIC_HOST_FLUSH_TMO (*CONFIG_APPTRACE_ONPANIC_HOST_FLUSH_TMO*)
- CONFIG_ESP32_APPTRACE_PENDING_DATA_SIZE_MAX (*CONFIG_APPTRACE_PENDING_DATA_SIZE_MAX*)
- CONFIG_ESP32_APPTRACE_POSTMORTEM_FLUSH_TRAX_THRESH (*CONFIG_APPTRACE_POSTMORTEM_FLUSH_THRESH*)
- **CONFIG_ESP32_CORE_DUMP_DECODE (*CONFIG_ESP_COREDUMP_DECODE*)**
  - CONFIG_ESP32_CORE_DUMP_DECODE_INFO
  - CONFIG_ESP32_CORE_DUMP_DECODE_DISABLE
- CONFIG_ESP32_CORE_DUMP_MAX_TASKS_NUM (*CONFIG_ESP_COREDUMP_MAX_TASKS_NUM*)
- CONFIG_ESP32_CORE_DUMP_UART_DELAY (*CONFIG_ESP_COREDUMP_UART_DELAY*)
- CONFIG_ESP32_GCOV_ENABLE (*CONFIG_APPTRACE_GCOV_ENABLE*)
- **CONFIG_ESP32_PANIC (*CONFIG_ESP_SYSTEM_PANIC*)**
  - CONFIG_ESP32S2_PANIC_PRINT_HALT
  - CONFIG_ESP32S2_PANIC_PRINT_REBOOT
  - CONFIG_ESP32S2_PANIC_SILENT_REBOOT
  - CONFIG_ESP32S2_PANIC_GDBSTUB
- CONFIG_ESP32_PTHREAD_STACK_MIN (*CONFIG_PTHREAD_STACK_MIN*)
- **CONFIG_ESP32_PTHREAD_TASK_CORE_DEFAULT (*CONFIG_PTHREAD_TASK_CORE_DEFAULT*)**
  - CONFIG_ESP32_DEFAULT_PTHREAD_CORE_NO_AFFINITY
  - CONFIG_ESP32_DEFAULT_PTHREAD_CORE_0
  - CONFIG_ESP32_DEFAULT_PTHREAD_CORE_1
- CONFIG_ESP32_PTHREAD_TASK_NAME_DEFAULT (*CONFIG_PTHREAD_TASK_NAME_DEFAULT*)
- CONFIG_ESP32_PTHREAD_TASK_PRIO_DEFAULT (*CONFIG_PTHREAD_TASK_PRIO_DEFAULT*)
- CONFIG_ESP32_PTHREAD_TASK_STACK_SIZE_DEFAULT (*CONFIG_PTHREAD_TASK_STACK_SIZE_DEFAULT*)
- **CONFIG_ESP32_RTC_CLOCK_SOURCE (*CONFIG_ESP32_RTC_CLK_SRC*)**
  - CONFIG_ESP32_RTC_CLOCK_SOURCE_INTERNAL_RC
  - CONFIG_ESP32_RTC_CLOCK_SOURCE_EXTERNAL_CRYSTAL
  - CONFIG_ESP32_RTC_CLOCK_SOURCE_EXTERNAL_OSC
  - CONFIG_ESP32_RTC_CLOCK_SOURCE_INTERNAL_8MD256
- CONFIG_ESP32_RTC_XTAL_BOOTSTRAP_CYCLES (*CONFIG_ESP_SYSTEM_RTC_EXT_XTAL_BOOTSTRAP_CYCLES*)
- CONFIG_ESP_GRATUITOUS_ARP (*CONFIG_LWIP_ESP_GRATUITOUS_ARP*)
- CONFIG_ESP_TCP_KEEP_CONNECTION_WHEN_IP_CHANGES (*CON-*

FIG_LWIP_TCP_KEEP_CONNECTION_WHEN_IP_CHANGES)
- CONFIG_EVENT_LOOP_PROFILING (*CONFIG_ESP_EVENT_LOOP_PROFILING*)
- CONFIG_FLASH_ENCRYPTION_ENABLED (*CONFIG_SECURE_FLASH_ENC_ENABLED*)
- CONFIG_FLASH_ENCRYPTION_UART_BOOTLOADER_ALLOW_CACHE (*CONFIG_SECURE_FLASH_UART_BOOTLOADER_ALLOW_CACHE*)
- CONFIG_FLASH_ENCRYPTION_UART_BOOTLOADER_ALLOW_DECRYPT (*CONFIG_SECURE_FLASH_UART_BOOTLOADER_ALLOW_DEC*)
- CONFIG_FLASH_ENCRYPTION_UART_BOOTLOADER_ALLOW_ENCRYPT (*CONFIG_SECURE_FLASH_UART_BOOTLOADER_ALLOW_ENC*)
- **CONFIG_GAP_INITIAL_TRACE_LEVEL (*CONFIG_BT_LOG_GAP_TRACE_LEVEL*)**
  - CONFIG_GAP_TRACE_LEVEL_NONE
  - CONFIG_GAP_TRACE_LEVEL_ERROR
  - CONFIG_GAP_TRACE_LEVEL_WARNING
  - CONFIG_GAP_TRACE_LEVEL_API
  - CONFIG_GAP_TRACE_LEVEL_EVENT
  - CONFIG_GAP_TRACE_LEVEL_DEBUG
  - CONFIG_GAP_TRACE_LEVEL_VERBOSE
- CONFIG_GARP_TMR_INTERVAL (*CONFIG_LWIP_GARP_TMR_INTERVAL*)
- CONFIG_GATTC_CACHE_NVS_FLASH (*CONFIG_BT_GATTC_CACHE_NVS_FLASH*)
- CONFIG_GATTC_ENABLE (*CONFIG_BT_GATTC_ENABLE*)
- CONFIG_GATTS_ENABLE (*CONFIG_BT_GATTS_ENABLE*)
- **CONFIG_GATTS_SEND_SERVICE_CHANGE_MODE (*CONFIG_BT_GATTS_SEND_SERVICE_CHANGE_MODE*)**
  - CONFIG_GATTS_SEND_SERVICE_CHANGE_MANUAL
  - CONFIG_GATTS_SEND_SERVICE_CHANGE_AUTO
- **CONFIG_GATT_INITIAL_TRACE_LEVEL (*CONFIG_BT_LOG_GATT_TRACE_LEVEL*)**
  - CONFIG_GATT_TRACE_LEVEL_NONE
  - CONFIG_GATT_TRACE_LEVEL_ERROR
  - CONFIG_GATT_TRACE_LEVEL_WARNING
  - CONFIG_GATT_TRACE_LEVEL_API
  - CONFIG_GATT_TRACE_LEVEL_EVENT
  - CONFIG_GATT_TRACE_LEVEL_DEBUG
  - CONFIG_GATT_TRACE_LEVEL_VERBOSE
- CONFIG_GDBSTUB_MAX_TASKS (*CONFIG_ESP_GDBSTUB_MAX_TASKS*)
- CONFIG_GDBSTUB_SUPPORT_TASKS (*CONFIG_ESP_GDBSTUB_SUPPORT_TASKS*)
- **CONFIG_HCI_INITIAL_TRACE_LEVEL (*CONFIG_BT_LOG_HCI_TRACE_LEVEL*)**
  - CONFIG_HCI_TRACE_LEVEL_NONE
  - CONFIG_HCI_TRACE_LEVEL_ERROR
  - CONFIG_HCI_TRACE_LEVEL_WARNING
  - CONFIG_HCI_TRACE_LEVEL_API
  - CONFIG_HCI_TRACE_LEVEL_EVENT
  - CONFIG_HCI_TRACE_LEVEL_DEBUG
  - CONFIG_HCI_TRACE_LEVEL_VERBOSE
- **CONFIG_HFP_AUDIO_DATA_PATH (*CONFIG_BT_HFP_AUDIO_DATA_PATH*)**
  - CONFIG_HFP_AUDIO_DATA_PATH_PCM
  - CONFIG_HFP_AUDIO_DATA_PATH_HCI
- CONFIG_HFP_ENABLE (*CONFIG_BT_HFP_ENABLE*)
- **CONFIG_HFP_ROLE (*CONFIG_BT_HFP_ROLE*)**
  - CONFIG_HFP_CLIENT_ENABLE
  - CONFIG_HFP_AG_ENABLE
- **CONFIG_HID_INITIAL_TRACE_LEVEL (*CONFIG_BT_LOG_HID_TRACE_LEVEL*)**
  - CONFIG_HID_TRACE_LEVEL_NONE
  - CONFIG_HID_TRACE_LEVEL_ERROR
  - CONFIG_HID_TRACE_LEVEL_WARNING
  - CONFIG_HID_TRACE_LEVEL_API
  - CONFIG_HID_TRACE_LEVEL_EVENT
  - CONFIG_HID_TRACE_LEVEL_DEBUG
  - CONFIG_HID_TRACE_LEVEL_VERBOSE

- CONFIG_INT_WDT (*CONFIG_ESP_INT_WDT*)
- CONFIG_INT_WDT_CHECK_CPU1 (*CONFIG_ESP_INT_WDT_CHECK_CPU1*)
- CONFIG_INT_WDT_TIMEOUT_MS (*CONFIG_ESP_INT_WDT_TIMEOUT_MS*)
- CONFIG_IPC_TASK_STACK_SIZE (*CONFIG_ESP_IPC_TASK_STACK_SIZE*)
- **CONFIG_L2CAP_INITIAL_TRACE_LEVEL (*CONFIG_BT_LOG_L2CAP_TRACE_LEVEL*)**
  - CONFIG_L2CAP_TRACE_LEVEL_NONE
  - CONFIG_L2CAP_TRACE_LEVEL_ERROR
  - CONFIG_L2CAP_TRACE_LEVEL_WARNING
  - CONFIG_L2CAP_TRACE_LEVEL_API
  - CONFIG_L2CAP_TRACE_LEVEL_EVENT
  - CONFIG_L2CAP_TRACE_LEVEL_DEBUG
  - CONFIG_L2CAP_TRACE_LEVEL_VERBOSE
- CONFIG_L2_TO_L3_COPY (*CONFIG_LWIP_L2_TO_L3_COPY*)
- **CONFIG_LOG_BOOTLOADER_LEVEL (*CONFIG_BOOTLOADER_LOG_LEVEL*)**
  - CONFIG_LOG_BOOTLOADER_LEVEL_NONE
  - CONFIG_LOG_BOOTLOADER_LEVEL_ERROR
  - CONFIG_LOG_BOOTLOADER_LEVEL_WARN
  - CONFIG_LOG_BOOTLOADER_LEVEL_INFO
  - CONFIG_LOG_BOOTLOADER_LEVEL_DEBUG
  - CONFIG_LOG_BOOTLOADER_LEVEL_VERBOSE
- CONFIG_MAIN_TASK_STACK_SIZE (*CONFIG_ESP_MAIN_TASK_STACK_SIZE*)
- CONFIG_MAKE_WARN_UNDEFINED_VARIABLES (*CONFIG_SDK_MAKE_WARN_UNDEFINED_VARIABLES*)
- CONFIG_MB_CONTROLLER_NOTIFY_QUEUE_SIZE (*CONFIG_FMB_CONTROLLER_NOTIFY_QUEUE_SIZE*)
- CONFIG_MB_CONTROLLER_NOTIFY_TIMEOUT (*CONFIG_FMB_CONTROLLER_NOTIFY_TIMEOUT*)
- CONFIG_MB_CONTROLLER_SLAVE_ID (*CONFIG_FMB_CONTROLLER_SLAVE_ID*)
- CONFIG_MB_CONTROLLER_SLAVE_ID_SUPPORT (*CONFIG_FMB_CONTROLLER_SLAVE_ID_SUPPORT*)
- CONFIG_MB_CONTROLLER_STACK_SIZE (*CONFIG_FMB_CONTROLLER_STACK_SIZE*)
- CONFIG_MB_EVENT_QUEUE_TIMEOUT (*CONFIG_FMB_EVENT_QUEUE_TIMEOUT*)
- CONFIG_MB_MASTER_DELAY_MS_CONVERT (*CONFIG_FMB_MASTER_DELAY_MS_CONVERT*)
- CONFIG_MB_MASTER_TIMEOUT_MS_RESPOND (*CONFIG_FMB_MASTER_TIMEOUT_MS_RESPOND*)
- CONFIG_MB_QUEUE_LENGTH (*CONFIG_FMB_QUEUE_LENGTH*)
- CONFIG_MB_SERIAL_BUF_SIZE (*CONFIG_FMB_SERIAL_BUF_SIZE*)
- CONFIG_MB_SERIAL_TASK_PRIO (*CONFIG_FMB_PORT_TASK_PRIO*)
- CONFIG_MB_SERIAL_TASK_STACK_SIZE (*CONFIG_FMB_PORT_TASK_STACK_SIZE*)
- CONFIG_MB_TIMER_GROUP (*CONFIG_FMB_TIMER_GROUP*)
- CONFIG_MB_TIMER_INDEX (*CONFIG_FMB_TIMER_INDEX*)
- CONFIG_MB_TIMER_PORT_ENABLED (*CONFIG_FMB_TIMER_PORT_ENABLED*)
- **CONFIG_MCA_INITIAL_TRACE_LEVEL (*CONFIG_BT_LOG_MCA_TRACE_LEVEL*)**
  - CONFIG_MCA_TRACE_LEVEL_NONE
  - CONFIG_MCA_TRACE_LEVEL_ERROR
  - CONFIG_MCA_TRACE_LEVEL_WARNING
  - CONFIG_MCA_TRACE_LEVEL_API
  - CONFIG_MCA_TRACE_LEVEL_EVENT
  - CONFIG_MCA_TRACE_LEVEL_DEBUG
  - CONFIG_MCA_TRACE_LEVEL_VERBOSE
- **CONFIG_MONITOR_BAUD (*CONFIG_ESPTOOLPY_MONITOR_BAUD*)**
  - CONFIG_MONITOR_BAUD_9600B
  - CONFIG_MONITOR_BAUD_57600B
  - CONFIG_MONITOR_BAUD_115200B
  - CONFIG_MONITOR_BAUD_230400B
  - CONFIG_MONITOR_BAUD_921600B
  - CONFIG_MONITOR_BAUD_2MB
  - CONFIG_MONITOR_BAUD_OTHER
- CONFIG_MONITOR_BAUD_OTHER_VAL (*CONFIG_ESPTOOLPY_MONITOR_BAUD_OTHER_VAL*)
- CONFIG_NIMBLE_ACL_BUF_COUNT (*CONFIG_BT_NIMBLE_ACL_BUF_COUNT*)
- CONFIG_NIMBLE_ACL_BUF_SIZE (*CONFIG_BT_NIMBLE_ACL_BUF_SIZE*)
- CONFIG_NIMBLE_ATT_PREFERRED_MTU (*CONFIG_BT_NIMBLE_ATT_PREFERRED_MTU*)
- CONFIG_NIMBLE_CRYPTO_STACK_MBEDTLS (*CONFIG_BT_NIMBLE_CRYPTO_STACK_MBEDTLS*)

- CONFIG_NIMBLE_DEBUG (*CONFIG_BT_NIMBLE_DEBUG*)
- CONFIG_NIMBLE_GAP_DEVICE_NAME_MAX_LEN (*CONFIG_BT_NIMBLE_GAP_DEVICE_NAME_MAX_LEN*)
- CONFIG_NIMBLE_HCI_EVT_BUF_SIZE (*CONFIG_BT_NIMBLE_HCI_EVT_BUF_SIZE*)
- CONFIG_NIMBLE_HCI_EVT_HI_BUF_COUNT (*CONFIG_BT_NIMBLE_HCI_EVT_HI_BUF_COUNT*)
- CONFIG_NIMBLE_HCI_EVT_LO_BUF_COUNT (*CONFIG_BT_NIMBLE_HCI_EVT_LO_BUF_COUNT*)
- CONFIG_NIMBLE_HS_FLOW_CTRL (*CONFIG_BT_NIMBLE_HS_FLOW_CTRL*)
- CONFIG_NIMBLE_HS_FLOW_CTRL_ITVL (*CONFIG_BT_NIMBLE_HS_FLOW_CTRL_ITVL*)
- CONFIG_NIMBLE_HS_FLOW_CTRL_THRESH (*CONFIG_BT_NIMBLE_HS_FLOW_CTRL_THRESH*)
- CONFIG_NIMBLE_HS_FLOW_CTRL_TX_ON_DISCONNECT (*CONFIG_BT_NIMBLE_HS_FLOW_CTRL_TX_ON_DISCONNECT*)
- CONFIG_NIMBLE_L2CAP_COC_MAX_NUM (*CONFIG_BT_NIMBLE_L2CAP_COC_MAX_NUM*)
- CONFIG_NIMBLE_MAX_BONDS (*CONFIG_BT_NIMBLE_MAX_BONDS*)
- CONFIG_NIMBLE_MAX_CCCDS (*CONFIG_BT_NIMBLE_MAX_CCCDS*)
- CONFIG_NIMBLE_MAX_CONNECTIONS (*CONFIG_BT_NIMBLE_MAX_CONNECTIONS*)
- **CONFIG_NIMBLE_MEM_ALLOC_MODE (*CONFIG_BT_NIMBLE_MEM_ALLOC_MODE*)**
  - CONFIG_NIMBLE_MEM_ALLOC_MODE_INTERNAL
  - CONFIG_NIMBLE_MEM_ALLOC_MODE_EXTERNAL
  - CONFIG_NIMBLE_MEM_ALLOC_MODE_DEFAULT
- CONFIG_NIMBLE_MESH (*CONFIG_BT_NIMBLE_MESH*)
- CONFIG_NIMBLE_MESH_DEVICE_NAME (*CONFIG_BT_NIMBLE_MESH_DEVICE_NAME*)
- CONFIG_NIMBLE_MESH_FRIEND (*CONFIG_BT_NIMBLE_MESH_FRIEND*)
- CONFIG_NIMBLE_MESH_GATT_PROXY (*CONFIG_BT_NIMBLE_MESH_GATT_PROXY*)
- CONFIG_NIMBLE_MESH_LOW_POWER (*CONFIG_BT_NIMBLE_MESH_LOW_POWER*)
- CONFIG_NIMBLE_MESH_PB_ADV (*CONFIG_BT_NIMBLE_MESH_PB_ADV*)
- CONFIG_NIMBLE_MESH_PB_GATT (*CONFIG_BT_NIMBLE_MESH_PB_GATT*)
- CONFIG_NIMBLE_MESH_PROV (*CONFIG_BT_NIMBLE_MESH_PROV*)
- CONFIG_NIMBLE_MESH_PROXY (*CONFIG_BT_NIMBLE_MESH_PROXY*)
- CONFIG_NIMBLE_MESH_RELAY (*CONFIG_BT_NIMBLE_MESH_RELAY*)
- CONFIG_NIMBLE_MSYS1_BLOCK_COUNT (*CONFIG_BT_NIMBLE_MSYS1_BLOCK_COUNT*)
- CONFIG_NIMBLE_NVS_PERSIST (*CONFIG_BT_NIMBLE_NVS_PERSIST*)
- **CONFIG_NIMBLE_PINNED_TO_CORE_CHOICE (*CONFIG_BT_NIMBLE_PINNED_TO_CORE_CHOICE*)**
  - CONFIG_NIMBLE_PINNED_TO_CORE_0
  - CONFIG_NIMBLE_PINNED_TO_CORE_1
- CONFIG_NIMBLE_ROLE_BROADCASTER (*CONFIG_BT_NIMBLE_ROLE_BROADCASTER*)
- CONFIG_NIMBLE_ROLE_CENTRAL (*CONFIG_BT_NIMBLE_ROLE_CENTRAL*)
- CONFIG_NIMBLE_ROLE_OBSERVER (*CONFIG_BT_NIMBLE_ROLE_OBSERVER*)
- CONFIG_NIMBLE_ROLE_PERIPHERAL (*CONFIG_BT_NIMBLE_ROLE_PERIPHERAL*)
- CONFIG_NIMBLE_RPA_TIMEOUT (*CONFIG_BT_NIMBLE_RPA_TIMEOUT*)
- CONFIG_NIMBLE_SM_LEGACY (*CONFIG_BT_NIMBLE_SM_LEGACY*)
- CONFIG_NIMBLE_SM_SC (*CONFIG_BT_NIMBLE_SM_SC*)
- CONFIG_NIMBLE_SM_SC_DEBUG_KEYS (*CONFIG_BT_NIMBLE_SM_SC_DEBUG_KEYS*)
- CONFIG_NIMBLE_SVC_GAP_APPEARANCE (*CONFIG_BT_NIMBLE_SVC_GAP_APPEARANCE*)
- CONFIG_NIMBLE_SVC_GAP_DEVICE_NAME (*CONFIG_BT_NIMBLE_SVC_GAP_DEVICE_NAME*)
- CONFIG_NIMBLE_TASK_STACK_SIZE (*CONFIG_BT_NIMBLE_TASK_STACK_SIZE*)
- CONFIG_NO_BLOBS (*CONFIG_ESP32_NO_BLOBS*)
- **CONFIG_NUMBER_OF_UNIVERSAL_MAC_ADDRESS (*CONFIG_ESP32_UNIVERSAL_MAC_ADDRESSES*)**
  - CONFIG_TWO_UNIVERSAL_MAC_ADDRESS
  - CONFIG_FOUR_UNIVERSAL_MAC_ADDRESS
- **CONFIG_OPTIMIZATION_ASSERTION_LEVEL (*CONFIG_COMPILER_OPTIMIZATION_ASSERTION_LEVEL*)**
  - CONFIG_OPTIMIZATION_ASSERTIONS_ENABLED
  - CONFIG_OPTIMIZATION_ASSERTIONS_SILENT
  - CONFIG_OPTIMIZATION_ASSERTIONS_DISABLED
- **CONFIG_OPTIMIZATION_COMPILER (*CONFIG_COMPILER_OPTIMIZATION*)**
  - CONFIG_COMPILER_OPTIMIZATION_LEVEL_DEBUG
  - CONFIG_COMPILER_OPTIMIZATION_LEVEL_RELEASE

- **CONFIG_OSI_INITIAL_TRACE_LEVEL (*CONFIG_BT_LOG_OSI_TRACE_LEVEL*)**
  - CONFIG_OSI_TRACE_LEVEL_NONE
  - CONFIG_OSI_TRACE_LEVEL_ERROR
  - CONFIG_OSI_TRACE_LEVEL_WARNING
  - CONFIG_OSI_TRACE_LEVEL_API
  - CONFIG_OSI_TRACE_LEVEL_EVENT
  - CONFIG_OSI_TRACE_LEVEL_DEBUG
  - CONFIG_OSI_TRACE_LEVEL_VERBOSE
- **CONFIG_PAN_INITIAL_TRACE_LEVEL (*CONFIG_BT_LOG_PAN_TRACE_LEVEL*)**
  - CONFIG_PAN_TRACE_LEVEL_NONE
  - CONFIG_PAN_TRACE_LEVEL_ERROR
  - CONFIG_PAN_TRACE_LEVEL_WARNING
  - CONFIG_PAN_TRACE_LEVEL_API
  - CONFIG_PAN_TRACE_LEVEL_EVENT
  - CONFIG_PAN_TRACE_LEVEL_DEBUG
  - CONFIG_PAN_TRACE_LEVEL_VERBOSE
- CONFIG_POST_EVENTS_FROM_IRAM_ISR (*CONFIG_ESP_EVENT_POST_FROM_IRAM_ISR*)
- CONFIG_POST_EVENTS_FROM_ISR (*CONFIG_ESP_EVENT_POST_FROM_ISR*)
- CONFIG_PPP_CHAP_SUPPORT (*CONFIG_LWIP_PPP_CHAP_SUPPORT*)
- CONFIG_PPP_DEBUG_ON (*CONFIG_LWIP_PPP_DEBUG_ON*)
- CONFIG_PPP_MPPE_SUPPORT (*CONFIG_LWIP_PPP_MPPE_SUPPORT*)
- CONFIG_PPP_MSCHAP_SUPPORT (*CONFIG_LWIP_PPP_MSCHAP_SUPPORT*)
- CONFIG_PPP_NOTIFY_PHASE_SUPPORT (*CONFIG_LWIP_PPP_NOTIFY_PHASE_SUPPORT*)
- CONFIG_PPP_PAP_SUPPORT (*CONFIG_LWIP_PPP_PAP_SUPPORT*)
- CONFIG_PPP_SUPPORT (*CONFIG_LWIP_PPP_SUPPORT*)
- CONFIG_PYTHON (*CONFIG_SDK_PYTHON*)
- CONFIG_REDUCE_PHY_TX_POWER (*CONFIG_ESP32_REDUCE_PHY_TX_POWER*)
- **CONFIG_RFCOMM_INITIAL_TRACE_LEVEL (*CONFIG_BT_LOG_RFCOMM_TRACE_LEVEL*)**
  - CONFIG_RFCOMM_TRACE_LEVEL_NONE
  - CONFIG_RFCOMM_TRACE_LEVEL_ERROR
  - CONFIG_RFCOMM_TRACE_LEVEL_WARNING
  - CONFIG_RFCOMM_TRACE_LEVEL_API
  - CONFIG_RFCOMM_TRACE_LEVEL_EVENT
  - CONFIG_RFCOMM_TRACE_LEVEL_DEBUG
  - CONFIG_RFCOMM_TRACE_LEVEL_VERBOSE
- CONFIG_SEMIHOSTFS_HOST_PATH_MAX_LEN (*CONFIG_VFS_SEMIHOSTFS_HOST_PATH_MAX_LEN*)
- CONFIG_SEMIHOSTFS_MAX_MOUNT_POINTS (*CONFIG_VFS_SEMIHOSTFS_MAX_MOUNT_POINTS*)
- **CONFIG_SMP_INITIAL_TRACE_LEVEL (*CONFIG_BT_LOG_SMP_TRACE_LEVEL*)**
  - CONFIG_SMP_TRACE_LEVEL_NONE
  - CONFIG_SMP_TRACE_LEVEL_ERROR
  - CONFIG_SMP_TRACE_LEVEL_WARNING
  - CONFIG_SMP_TRACE_LEVEL_API
  - CONFIG_SMP_TRACE_LEVEL_EVENT
  - CONFIG_SMP_TRACE_LEVEL_DEBUG
  - CONFIG_SMP_TRACE_LEVEL_VERBOSE
- CONFIG_SMP_SLAVE_CON_PARAMS_UPD_ENABLE (*CONFIG_BT_SMP_SLAVE_CON_PARAMS_UPD_ENABLE*)
- CONFIG_SPIRAM_SUPPORT (*CONFIG_ESP32_SPIRAM_SUPPORT*)
- **CONFIG_SPI_FLASH_WRITING_DANGEROUS_REGIONS (*CONFIG_SPI_FLASH_DANGEROUS_WRITE*)**
  - CONFIG_SPI_FLASH_WRITING_DANGEROUS_REGIONS_ABORTS
  - CONFIG_SPI_FLASH_WRITING_DANGEROUS_REGIONS_FAILS
  - CONFIG_SPI_FLASH_WRITING_DANGEROUS_REGIONS_ALLOWED
- **CONFIG_STACK_CHECK_MODE (*CONFIG_COMPILER_STACK_CHECK_MODE*)**
  - CONFIG_STACK_CHECK_NONE
  - CONFIG_STACK_CHECK_NORM
  - CONFIG_STACK_CHECK_STRONG
  - CONFIG_STACK_CHECK_ALL
- CONFIG_SUPPORT_TERMIOS (*CONFIG_VFS_SUPPORT_TERMIOS*)

- CONFIG_SUPPRESS_SELECT_DEBUG_OUTPUT (*CONFIG_VFS_SUPPRESS_SELECT_DEBUG_OUTPUT*)
- CONFIG_SW_COEXIST_ENABLE (*CONFIG_ESP32_WIFI_SW_COEXIST_ENABLE*)
- CONFIG_SYSTEM_EVENT_QUEUE_SIZE (*CONFIG_ESP_SYSTEM_EVENT_QUEUE_SIZE*)
- CONFIG_SYSTEM_EVENT_TASK_STACK_SIZE (*CONFIG_ESP_SYSTEM_EVENT_TASK_STACK_SIZE*)
- CONFIG_SYSVIEW_BUF_WAIT_TMO (*CONFIG_APPTRACE_SV_BUF_WAIT_TMO*)
- CONFIG_SYSVIEW_ENABLE (*CONFIG_APPTRACE_SV_ENABLE*)
- CONFIG_SYSVIEW_EVT_IDLE_ENABLE (*CONFIG_APPTRACE_SV_EVT_IDLE_ENABLE*)
- CONFIG_SYSVIEW_EVT_ISR_ENTER_ENABLE (*CONFIG_APPTRACE_SV_EVT_ISR_ENTER_ENABLE*)
- CONFIG_SYSVIEW_EVT_ISR_EXIT_ENABLE (*CONFIG_APPTRACE_SV_EVT_ISR_EXIT_ENABLE*)
- CONFIG_SYSVIEW_EVT_ISR_TO_SCHEDULER_ENABLE (*CONFIG_APPTRACE_SV_EVT_ISR_TO_SCHED_ENABLE*)
- CONFIG_SYSVIEW_EVT_OVERFLOW_ENABLE (*CONFIG_APPTRACE_SV_EVT_OVERFLOW_ENABLE*)
- CONFIG_SYSVIEW_EVT_TASK_CREATE_ENABLE (*CONFIG_APPTRACE_SV_EVT_TASK_CREATE_ENABLE*)
- CONFIG_SYSVIEW_EVT_TASK_START_EXEC_ENABLE (*CONFIG_APPTRACE_SV_EVT_TASK_START_EXEC_ENABL*
- CONFIG_SYSVIEW_EVT_TASK_START_READY_ENABLE (*CONFIG_APPTRACE_SV_EVT_TASK_START_READY_EN*
- CONFIG_SYSVIEW_EVT_TASK_STOP_EXEC_ENABLE (*CONFIG_APPTRACE_SV_EVT_TASK_STOP_EXEC_ENABLE*)
- CONFIG_SYSVIEW_EVT_TASK_STOP_READY_ENABLE (*CONFIG_APPTRACE_SV_EVT_TASK_STOP_READY_ENAB*
- CONFIG_SYSVIEW_EVT_TASK_TERMINATE_ENABLE (*CONFIG_APPTRACE_SV_EVT_TASK_TERMINATE_ENABLE*)
- CONFIG_SYSVIEW_EVT_TIMER_ENTER_ENABLE (*CONFIG_APPTRACE_SV_EVT_TIMER_ENTER_ENABLE*)
- CONFIG_SYSVIEW_EVT_TIMER_EXIT_ENABLE (*CONFIG_APPTRACE_SV_EVT_TIMER_EXIT_ENABLE*)
- CONFIG_SYSVIEW_MAX_TASKS (*CONFIG_APPTRACE_SV_MAX_TASKS*)
- **CONFIG_SYSVIEW_TS_SOURCE (*CONFIG_APPTRACE_SV_TS_SOURCE*)**
  - CONFIG_SYSVIEW_TS_SOURCE_CCOUNT
  - CONFIG_SYSVIEW_TS_SOURCE_TIMER_00
  - CONFIG_SYSVIEW_TS_SOURCE_TIMER_01
  - CONFIG_SYSVIEW_TS_SOURCE_TIMER_10
  - CONFIG_SYSVIEW_TS_SOURCE_TIMER_11
  - CONFIG_SYSVIEW_TS_SOURCE_ESP_TIMER
- CONFIG_TASK_WDT (*CONFIG_ESP_TASK_WDT*)
- CONFIG_TASK_WDT_CHECK_IDLE_TASK_CPU0 (*CONFIG_ESP_TASK_WDT_CHECK_IDLE_TASK_CPU0*)
- CONFIG_TASK_WDT_CHECK_IDLE_TASK_CPU1 (*CONFIG_ESP_TASK_WDT_CHECK_IDLE_TASK_CPU1*)
- CONFIG_TASK_WDT_PANIC (*CONFIG_ESP_TASK_WDT_PANIC*)
- CONFIG_TASK_WDT_TIMEOUT_S (*CONFIG_ESP_TASK_WDT_TIMEOUT_S*)
- CONFIG_TCPIP_RECVMBOX_SIZE (*CONFIG_LWIP_TCPIP_RECVMBOX_SIZE*)
- **CONFIG_TCPIP_TASK_AFFINITY (*CONFIG_LWIP_TCPIP_TASK_AFFINITY*)**
  - CONFIG_TCPIP_TASK_AFFINITY_NO_AFFINITY
  - CONFIG_TCPIP_TASK_AFFINITY_CPU0
  - CONFIG_TCPIP_TASK_AFFINITY_CPU1
- CONFIG_TCPIP_TASK_STACK_SIZE (*CONFIG_LWIP_TCPIP_TASK_STACK_SIZE*)
- CONFIG_TCP_MAXRTX (*CONFIG_LWIP_TCP_MAXRTX*)
- CONFIG_TCP_MSL (*CONFIG_LWIP_TCP_MSL*)
- CONFIG_TCP_MSS (*CONFIG_LWIP_TCP_MSS*)
- **CONFIG_TCP_OVERSIZE (*CONFIG_LWIP_TCP_OVERSIZE*)**
  - CONFIG_TCP_OVERSIZE_MSS
  - CONFIG_TCP_OVERSIZE_QUARTER_MSS
  - CONFIG_TCP_OVERSIZE_DISABLE
- CONFIG_TCP_QUEUE_OOSEQ (*CONFIG_LWIP_TCP_QUEUE_OOSEQ*)
- CONFIG_TCP_RECVMBOX_SIZE (*CONFIG_LWIP_TCP_RECVMBOX_SIZE*)
- CONFIG_TCP_SND_BUF_DEFAULT (*CONFIG_LWIP_TCP_SND_BUF_DEFAULT*)
- CONFIG_TCP_SYNMAXRTX (*CONFIG_LWIP_TCP_SYNMAXRTX*)
- CONFIG_TCP_WND_DEFAULT (*CONFIG_LWIP_TCP_WND_DEFAULT*)
- CONFIG_TIMER_QUEUE_LENGTH (*CONFIG_FREERTOS_TIMER_QUEUE_LENGTH*)
- CONFIG_TIMER_TASK_PRIORITY (*CONFIG_FREERTOS_TIMER_TASK_PRIORITY*)
- CONFIG_TIMER_TASK_STACK_DEPTH (*CONFIG_FREERTOS_TIMER_TASK_STACK_DEPTH*)
- CONFIG_TIMER_TASK_STACK_SIZE (*CONFIG_ESP_TIMER_TASK_STACK_SIZE*)
- CONFIG_TOOLPREFIX (*CONFIG_SDK_TOOLPREFIX*)
- CONFIG_UDP_RECVMBOX_SIZE (*CONFIG_LWIP_UDP_RECVMBOX_SIZE*)
- CONFIG_ULP_COPROC_ENABLED (*CONFIG_ESP32_ULP_COPROC_ENABLED*)
- CONFIG_ULP_COPROC_RESERVE_MEM (*CONFIG_ESP32_ULP_COPROC_RESERVE_MEM*)

- CONFIG_USE_ONLY_LWIP_SELECT (*CONFIG_LWIP_USE_ONLY_LWIP_SELECT*)
- CONFIG_WARN_WRITE_STRINGS (*CONFIG_COMPILER_WARN_WRITE_STRINGS*)
- CONFIG_WIFI_LWIP_ALLOCATION_FROM_SPIRAM_FIRST (*CONFIG_SPIRAM_TRY_ALLOCATE_WIFI_LWIP*)

2.8.7 Customisations

Because IDF builds by default with 警告未定义的变量, when the Kconfig tool generates Makefiles (the `auto.conf` file) its behaviour has been customised. In normal Kconfig, a variable which is set to "no" is undefined. In IDF's version of Kconfig, this variable is defined in the Makefile but has an empty value.

(Note that `ifdef` and `ifndef` can still be used in Makefiles, because they test if a variable is defined *and has a non-empty value*.)

When generating header files for C & C++, the behaviour is not customised - so `#ifdef` can be used to test if a boolean config item is set or not.

2.9 Error Codes Reference

This section lists various error code constants defined in ESP-IDF.

For general information about error codes in ESP-IDF, see *Error Handling*.

ESP_FAIL (-1): Generic esp_err_t code indicating failure

ESP_OK (0): esp_err_t value indicating success (no error)

ESP_ERR_NO_MEM **(0x101)**: Out of memory

ESP_ERR_INVALID_ARG **(0x102)**: Invalid argument

ESP_ERR_INVALID_STATE **(0x103)**: Invalid state

ESP_ERR_INVALID_SIZE **(0x104)**: Invalid size

ESP_ERR_NOT_FOUND **(0x105)**: Requested resource not found

ESP_ERR_NOT_SUPPORTED **(0x106)**: Operation or feature not supported

ESP_ERR_TIMEOUT **(0x107)**: Operation timed out

ESP_ERR_INVALID_RESPONSE **(0x108)**: Received response was invalid

ESP_ERR_INVALID_CRC **(0x109)**: CRC or checksum was invalid

ESP_ERR_INVALID_VERSION **(0x10a)**: Version was invalid

ESP_ERR_INVALID_MAC **(0x10b)**: MAC address was invalid

ESP_ERR_NOT_FINISHED **(0x201)**

ESP_ERR_NVS_BASE **(0x1100)**: Starting number of error codes

ESP_ERR_NVS_NOT_INITIALIZED **(0x1101)**: The storage driver is not initialized

ESP_ERR_NVS_NOT_FOUND **(0x1102)**: Id namespace doesn't exist yet and mode is NVS_READONLY

ESP_ERR_NVS_TYPE_MISMATCH **(0x1103)**: The type of set or get operation doesn't match the type of value stored in NVS

ESP_ERR_NVS_READ_ONLY **(0x1104)**: Storage handle was opened as read only

ESP_ERR_NVS_NOT_ENOUGH_SPACE **(0x1105)**: There is not enough space in the underlying storage to save the value

ESP_ERR_NVS_INVALID_NAME **(0x1106)**: Namespace name doesn't satisfy constraints

ESP_ERR_NVS_INVALID_HANDLE **(0x1107)**: Handle has been closed or is NULL

ESP_ERR_NVS_REMOVE_FAILED **(0x1108)**: The value wasn't updated because flash write operation has failed. The value was written however, and update will be finished after re-initialization of nvs, provided that flash operation doesn't fail again.

ESP_ERR_NVS_KEY_TOO_LONG **(0x1109)**: Key name is too long

ESP_ERR_NVS_PAGE_FULL **(0x110a)**: Internal error; never returned by nvs API functions

ESP_ERR_NVS_INVALID_STATE **(0x110b)**: NVS is in an inconsistent state due to a previous error. Call nvs_flash_init and nvs_open again, then retry.

ESP_ERR_NVS_INVALID_LENGTH **(0x110c)**: String or blob length is not sufficient to store data

ESP_ERR_NVS_NO_FREE_PAGES **(0x110d)**: NVS partition doesn't contain any empty pages. This may happen if NVS partition was truncated. Erase the whole partition and call nvs_flash_init again.

ESP_ERR_NVS_VALUE_TOO_LONG **(0x110e)**: String or blob length is longer than supported by the implementation

ESP_ERR_NVS_PART_NOT_FOUND **(0x110f)**: Partition with specified name is not found in the partition table

ESP_ERR_NVS_NEW_VERSION_FOUND **(0x1110)**: NVS partition contains data in new format and cannot be recognized by this version of code

ESP_ERR_NVS_XTS_ENCR_FAILED **(0x1111)**: XTS encryption failed while writing NVS entry

ESP_ERR_NVS_XTS_DECR_FAILED **(0x1112)**: XTS decryption failed while reading NVS entry

ESP_ERR_NVS_XTS_CFG_FAILED **(0x1113)**: XTS configuration setting failed

ESP_ERR_NVS_XTS_CFG_NOT_FOUND **(0x1114)**: XTS configuration not found

ESP_ERR_NVS_ENCR_NOT_SUPPORTED **(0x1115)**: NVS encryption is not supported in this version

ESP_ERR_NVS_KEYS_NOT_INITIALIZED **(0x1116)**: NVS key partition is uninitialized

ESP_ERR_NVS_CORRUPT_KEY_PART **(0x1117)**: NVS key partition is corrupt

ESP_ERR_NVS_CONTENT_DIFFERS **(0x1118)**: Internal error; never returned by nvs API functions. NVS key is different in comparison

ESP_ERR_NVS_WRONG_ENCRYPTION **(0x1119)**: NVS partition is marked as encrypted with generic flash encryption. This is forbidden since the NVS encryption works differently.

ESP_ERR_ULP_BASE **(0x1200)**: Offset for ULP-related error codes

ESP_ERR_ULP_SIZE_TOO_BIG **(0x1201)**: Program doesn't fit into RTC memory reserved for the ULP

ESP_ERR_ULP_INVALID_LOAD_ADDR **(0x1202)**: Load address is outside of RTC memory reserved for the ULP

ESP_ERR_ULP_DUPLICATE_LABEL **(0x1203)**: More than one label with the same number was defined

ESP_ERR_ULP_UNDEFINED_LABEL **(0x1204)**: Branch instructions references an undefined label

ESP_ERR_ULP_BRANCH_OUT_OF_RANGE **(0x1205)**: Branch target is out of range of B instruction (try replacing with BX)

ESP_ERR_OTA_BASE **(0x1500)**: Base error code for ota_ops api

ESP_ERR_OTA_PARTITION_CONFLICT **(0x1501)**: Error if request was to write or erase the current running partition

ESP_ERR_OTA_SELECT_INFO_INVALID **(0x1502)**: Error if OTA data partition contains invalid content

ESP_ERR_OTA_VALIDATE_FAILED **(0x1503)**: Error if OTA app image is invalid

ESP_ERR_OTA_SMALL_SEC_VER **(0x1504)**: Error if the firmware has a secure version less than the running firmware.

ESP_ERR_OTA_ROLLBACK_FAILED **(0x1505)**: Error if flash does not have valid firmware in passive partition and hence rollback is not possible

ESP_ERR_OTA_ROLLBACK_INVALID_STATE **(0x1506)**: Error if current active firmware is still marked in pending validation state (ESP_OTA_IMG_PENDING_VERIFY), essentially first boot of firmware image post upgrade and hence firmware upgrade is not possible

ESP_ERR_EFUSE **(0x1600)**: Base error code for efuse api.

ESP_OK_EFUSE_CNT **(0x1601)**: OK the required number of bits is set.

ESP_ERR_EFUSE_CNT_IS_FULL **(0x1602)**: Error field is full.

ESP_ERR_EFUSE_REPEATED_PROG **(0x1603)**: Error repeated programming of programmed bits is strictly forbidden.

ESP_ERR_CODING **(0x1604)**: Error while a encoding operation.

ESP_ERR_NOT_ENOUGH_UNUSED_KEY_BLOCKS **(0x1605)**: Error not enough unused key blocks available

ESP_ERR_IMAGE_BASE **(0x2000)**

ESP_ERR_IMAGE_FLASH_FAIL **(0x2001)**

ESP_ERR_IMAGE_INVALID **(0x2002)**

ESP_ERR_WIFI_BASE **(0x3000)**: Starting number of WiFi error codes

ESP_ERR_WIFI_NOT_INIT **(0x3001)**: WiFi driver was not installed by esp_wifi_init

ESP_ERR_WIFI_NOT_STARTED **(0x3002)**: WiFi driver was not started by esp_wifi_start

ESP_ERR_WIFI_NOT_STOPPED **(0x3003)**: WiFi driver was not stopped by esp_wifi_stop

ESP_ERR_WIFI_IF **(0x3004)**: WiFi interface error

ESP_ERR_WIFI_MODE **(0x3005)**: WiFi mode error

ESP_ERR_WIFI_STATE **(0x3006)**: WiFi internal state error

ESP_ERR_WIFI_CONN **(0x3007)**: WiFi internal control block of station or soft-AP error

ESP_ERR_WIFI_NVS **(0x3008)**: WiFi internal NVS module error

ESP_ERR_WIFI_MAC **(0x3009)**: MAC address is invalid

ESP_ERR_WIFI_SSID **(0x300a)**: SSID is invalid

ESP_ERR_WIFI_PASSWORD **(0x300b)**: Password is invalid

ESP_ERR_WIFI_TIMEOUT **(0x300c)**: Timeout error

ESP_ERR_WIFI_WAKE_FAIL **(0x300d)**: WiFi is in sleep state(RF closed) and wakeup fail

ESP_ERR_WIFI_WOULD_BLOCK **(0x300e)**: The caller would block

ESP_ERR_WIFI_NOT_CONNECT **(0x300f)**: Station still in disconnect status

ESP_ERR_WIFI_POST **(0x3012)**: Failed to post the event to WiFi task

ESP_ERR_WIFI_INIT_STATE **(0x3013)**: Invalid WiFi state when init/deinit is called

ESP_ERR_WIFI_STOP_STATE **(0x3014)**: Returned when WiFi is stopping

ESP_ERR_WIFI_NOT_ASSOC **(0x3015)**: The WiFi connection is not associated

ESP_ERR_WIFI_TX_DISALLOW **(0x3016)**: The WiFi TX is disallowed

ESP_ERR_WIFI_DISCARD **(0x3017)**: Discard frame

ESP_ERR_WIFI_REGISTRAR **(0x3033)**: WPS registrar is not supported

ESP_ERR_WIFI_WPS_TYPE **(0x3034)**: WPS type error

ESP_ERR_WIFI_WPS_SM **(0x3035)**: WPS state machine is not initialized

ESP_ERR_ESPNOW_BASE **(0x3064)**: ESPNOW error number base.

ESP_ERR_ESPNOW_NOT_INIT **(0x3065)**: ESPNOW is not initialized.

ESP_ERR_ESPNOW_ARG **(0x3066)**: Invalid argument

ESP_ERR_ESPNOW_NO_MEM **(0x3067)**: Out of memory

ESP_ERR_ESPNOW_FULL **(0x3068)**: ESPNOW peer list is full

ESP_ERR_ESPNOW_NOT_FOUND **(0x3069)**: ESPNOW peer is not found

ESP_ERR_ESPNOW_INTERNAL **(0x306a)**: Internal error

ESP_ERR_ESPNOW_EXIST **(0x306b)**: ESPNOW peer has existed

ESP_ERR_ESPNOW_IF **(0x306c)**: Interface error

ESP_ERR_DPP_FAILURE **(0x3097)**: Generic failure during DPP Operation

ESP_ERR_DPP_TX_FAILURE **(0x3098)**: DPP Frame Tx failed OR not Acked

ESP_ERR_DPP_INVALID_ATTR **(0x3099)**: Encountered invalid DPP Attribute

ESP_ERR_MESH_BASE **(0x4000)**: Starting number of MESH error codes

ESP_ERR_MESH_WIFI_NOT_START **(0x4001)**

ESP_ERR_MESH_NOT_INIT **(0x4002)**

ESP_ERR_MESH_NOT_CONFIG **(0x4003)**

ESP_ERR_MESH_NOT_START **(0x4004)**

ESP_ERR_MESH_NOT_SUPPORT **(0x4005)**

ESP_ERR_MESH_NOT_ALLOWED **(0x4006)**

ESP_ERR_MESH_NO_MEMORY **(0x4007)**

ESP_ERR_MESH_ARGUMENT **(0x4008)**

ESP_ERR_MESH_EXCEED_MTU **(0x4009)**

ESP_ERR_MESH_TIMEOUT **(0x400a)**

ESP_ERR_MESH_DISCONNECTED **(0x400b)**

ESP_ERR_MESH_QUEUE_FAIL **(0x400c)**

ESP_ERR_MESH_QUEUE_FULL **(0x400d)**

ESP_ERR_MESH_NO_PARENT_FOUND **(0x400e)**

ESP_ERR_MESH_NO_ROUTE_FOUND **(0x400f)**

ESP_ERR_MESH_OPTION_NULL **(0x4010)**

ESP_ERR_MESH_OPTION_UNKNOWN **(0x4011)**

ESP_ERR_MESH_XON_NO_WINDOW **(0x4012)**

ESP_ERR_MESH_INTERFACE **(0x4013)**

ESP_ERR_MESH_DISCARD_DUPLICATE **(0x4014)**

ESP_ERR_MESH_DISCARD **(0x4015)**

ESP_ERR_MESH_VOTING **(0x4016)**

ESP_ERR_MESH_XMIT **(0x4017)**

ESP_ERR_MESH_QUEUE_READ **(0x4018)**

ESP_ERR_MESH_PS **(0x4019)**

ESP_ERR_MESH_RECV_RELEASE **(0x401a)**

`ESP_ERR_ESP_NETIF_BASE` **(0x5000)**

`ESP_ERR_ESP_NETIF_INVALID_PARAMS` **(0x5001)**

ESP_ERR_ESP_NETIF_IF_NOT_READY **(0x5002)**

ESP_ERR_ESP_NETIF_DHCPC_START_FAILED **(0x5003)**

ESP_ERR_ESP_NETIF_DHCP_ALREADY_STARTED **(0x5004)**

ESP_ERR_ESP_NETIF_DHCP_ALREADY_STOPPED **(0x5005)**

ESP_ERR_ESP_NETIF_NO_MEM **(0x5006)**

ESP_ERR_ESP_NETIF_DHCP_NOT_STOPPED **(0x5007)**

ESP_ERR_ESP_NETIF_DRIVER_ATTACH_FAILED **(0x5008)**

ESP_ERR_ESP_NETIF_INIT_FAILED **(0x5009)**

ESP_ERR_ESP_NETIF_DNS_NOT_CONFIGURED **(0x500a)**

ESP_ERR_ESP_NETIF_DHCPS_START_FAILED **(0x500b)**

ESP_ERR_FLASH_BASE **(0x6000)**: Starting number of flash error codes

ESP_ERR_FLASH_OP_FAIL **(0x6001)**

ESP_ERR_FLASH_OP_TIMEOUT **(0x6002)**

ESP_ERR_FLASH_NOT_INITIALISED **(0x6003)**

ESP_ERR_FLASH_UNSUPPORTED_HOST **(0x6004)**

ESP_ERR_FLASH_UNSUPPORTED_CHIP **(0x6005)**

ESP_ERR_FLASH_PROTECTED **(0x6006)**

ESP_ERR_HTTP_BASE **(0x7000)**: Starting number of HTTP error codes

ESP_ERR_HTTP_MAX_REDIRECT **(0x7001)**: The error exceeds the number of HTTP redirects

ESP_ERR_HTTP_CONNECT **(0x7002)**: Error open the HTTP connection

ESP_ERR_HTTP_WRITE_DATA **(0x7003)**: Error write HTTP data

ESP_ERR_HTTP_FETCH_HEADER **(0x7004)**: Error read HTTP header from server

ESP_ERR_HTTP_INVALID_TRANSPORT **(0x7005)**: There are no transport support for the input scheme

ESP_ERR_HTTP_CONNECTING **(0x7006)**: HTTP connection hasn't been established yet

ESP_ERR_HTTP_EAGAIN **(0x7007)**: Mapping of errno EAGAIN to esp_err_t

ESP_ERR_ESP_TLS_BASE **(0x8000)**: Starting number of ESP-TLS error codes

ESP_ERR_ESP_TLS_CANNOT_RESOLVE_HOSTNAME **(0x8001)**: Error if hostname couldn't be resolved upon tls connection

ESP_ERR_ESP_TLS_CANNOT_CREATE_SOCKET **(0x8002)**: Failed to create socket

ESP_ERR_ESP_TLS_UNSUPPORTED_PROTOCOL_FAMILY **(0x8003)**: Unsupported protocol family

ESP_ERR_ESP_TLS_FAILED_CONNECT_TO_HOST **(0x8004)**: Failed to connect to host

ESP_ERR_ESP_TLS_SOCKET_SETOPT_FAILED **(0x8005)**: failed to set socket option

ESP_ERR_MBEDTLS_CERT_PARTLY_OK **(0x8006)**: mbedtls parse certificates was partly successful

ESP_ERR_MBEDTLS_CTR_DRBG_SEED_FAILED **(0x8007)**: mbedtls api returned error

ESP_ERR_MBEDTLS_SSL_SET_HOSTNAME_FAILED **(0x8008)**: mbedtls api returned error

ESP_ERR_MBEDTLS_SSL_CONFIG_DEFAULTS_FAILED **(0x8009)**: mbedtls api returned error

ESP_ERR_MBEDTLS_SSL_CONF_ALPN_PROTOCOLS_FAILED **(0x800a)**: mbedtls api returned error

ESP_ERR_MBEDTLS_X509_CRT_PARSE_FAILED **(0x800b)**: mbedtls api returned error

ESP_ERR_MBEDTLS_SSL_CONF_OWN_CERT_FAILED **(0x800c)**: mbedtls api returned error

ESP_ERR_MBEDTLS_SSL_SETUP_FAILED **(0x800d)**: mbedtls api returned error

ESP_ERR_MBEDTLS_SSL_WRITE_FAILED **(0x800e)**: mbedtls api returned error

ESP_ERR_MBEDTLS_PK_PARSE_KEY_FAILED **(0x800f)**: mbedtls api returned failed

ESP_ERR_MBEDTLS_SSL_HANDSHAKE_FAILED **(0x8010)**: mbedtls api returned failed

ESP_ERR_MBEDTLS_SSL_CONF_PSK_FAILED **(0x8011)**: mbedtls api returned failed

ESP_ERR_ESP_TLS_CONNECTION_TIMEOUT **(0x8012)**: new connection in esp_tls_low_level_conn connection timeouted

ESP_ERR_WOLFSSL_SSL_SET_HOSTNAME_FAILED **(0x8013)**: wolfSSL api returned error

ESP_ERR_WOLFSSL_SSL_CONF_ALPN_PROTOCOLS_FAILED **(0x8014)**: wolfSSL api returned error

ESP_ERR_WOLFSSL_CERT_VERIFY_SETUP_FAILED **(0x8015)**: wolfSSL api returned error

ESP_ERR_WOLFSSL_KEY_VERIFY_SETUP_FAILED **(0x8016)**: wolfSSL api returned error

ESP_ERR_WOLFSSL_SSL_HANDSHAKE_FAILED **(0x8017)**: wolfSSL api returned failed

ESP_ERR_WOLFSSL_CTX_SETUP_FAILED **(0x8018)**: wolfSSL api returned failed

ESP_ERR_WOLFSSL_SSL_SETUP_FAILED **(0x8019)**: wolfSSL api returned failed

ESP_ERR_WOLFSSL_SSL_WRITE_FAILED **(0x801a)**: wolfSSL api returned failed

ESP_ERR_ESP_TLS_SE_FAILED **(0x801b)**

ESP_ERR_HTTPS_OTA_BASE **(0x9000)**

ESP_ERR_HTTPS_OTA_IN_PROGRESS **(0x9001)**

ESP_ERR_PING_BASE **(0xa000)**

ESP_ERR_PING_INVALID_PARAMS **(0xa001)**

ESP_ERR_PING_NO_MEM **(0xa002)**

ESP_ERR_HTTPD_BASE **(0xb000)**: Starting number of HTTPD error codes

ESP_ERR_HTTPD_HANDLERS_FULL **(0xb001)**: All slots for registering URI handlers have been consumed

ESP_ERR_HTTPD_HANDLER_EXISTS **(0xb002)**: URI handler with same method and target URI already registered

ESP_ERR_HTTPD_INVALID_REQ **(0xb003)**: Invalid request pointer

ESP_ERR_HTTPD_RESULT_TRUNC **(0xb004)**: Result string truncated

ESP_ERR_HTTPD_RESP_HDR **(0xb005)**: Response header field larger than supported

ESP_ERR_HTTPD_RESP_SEND **(0xb006)**: Error occured while sending response packet

ESP_ERR_HTTPD_ALLOC_MEM **(0xb007)**: Failed to dynamically allocate memory for resource

ESP_ERR_HTTPD_TASK **(0xb008)**: Failed to launch server task/thread

ESP_ERR_HW_CRYPTO_BASE **(0xc000)**: Starting number of HW cryptography module error codes

ESP_ERR_HW_CRYPTO_DS_HMAC_FAIL **(0xc001)**: HMAC peripheral problem

ESP_ERR_HW_CRYPTO_DS_INVALID_KEY **(0xc002)**

ESP_ERR_HW_CRYPTO_DS_INVALID_DIGEST **(0xc004)**

ESP_ERR_HW_CRYPTO_DS_INVALID_PADDING **(0xc005)**

Chapter 3

ESP32 H/W 硬件参考

3.1 ESP32 系列模组和开发板

乐鑫设计并提供多种模组和开发板以供用户体验 ESP32 系列芯片的强大功能。

本文档主要介绍了当前乐鑫所提供的各种模组和开发板。

注解： 如需了解较早版本或已停产的模组和开发板，请参考*ESP32 模组与开发板（历史版本）*。

3.1.1 模组

ESP32 系列模组集成了晶振、天线匹配电路等重要组件，可直接集成到终端产品中。如果再结合一些其他组件，例如编程接口、自举电阻和排针，您就可以体验 ESP32 的强大功能了。

下表总结了上述系列模组的主要特点，详细信息见后文。

模组	芯片	Flash (MB)	PSRAM (MB)	天线	尺寸 (mm)
ESP32-WROOM-32	ESP32-D0WDQ6	4	–	MIFA	18 × 25.5 × 3.1
ESP32-WROOM-32D	ESP32-D0WD	4、8 或 16	–	MIFA	18 × 25.5 × 3.1
ESP32-WROOM-32U	ESP32-D0WD	4、8 或 16	–	U.FL	18 × 19.2 × 3.1
ESP32-SOLO-1	ESP32-S0WD	4	–	MIFA	18 × 25.5 × 3.1
ESP32-WROVER (PCB)	ESP32-D0WDQ6	4	8	MIFA	18 × 31.4 × 3.3
ESP32-WROVER (IPEX)	ESP32-D0WDQ6	4	8	U.FL	18 × 31.4 × 3.3
ESP32-WROVER-B	ESP32-D0WD	4、8 或 16	8	MIFA	18 × 31.4 × 3.3
ESP32-WROVER-IB	ESP32-D0WD	4、8 或 16	8	U.FL	18 × 31.4 × 3.3

- ESP32-**D**.. 代表双核芯片，ESP32-**S**.. 代表单核芯片；
- MIFA - 蛇形倒 F 天线；
- U.FL - U.FL/IPEX 天线连接器；
- ESP32-WROOM-32x、ESP32-WROVER-B 和 ESP32-WROVER-IB 模组默认内置 4 MB flash，客户可定制 8 MB 和 16 MB flash，详情见 乐鑫产品订购信息 (PDF) 和《ESP32 技术规格书》(PDF)；
- 最初发布的 ESP32-WROVER 模组内置 4 MB PSRAM；
- *ESP-WROOM-32* 是 *ESP32-WROOM-32* 的曾用名。

ESP32-WROOM-32 模组

ESP32-WROOM-32 模组是 WROOM/WROVER 系列最先发布的模组，内置 ESP32-D0WDQ6 芯片，是一款基础且常用的 ESP32 模组。

有关该模组的详细信息，请查看模组 中的表格和 '乐鑫产品订购信息 '_。

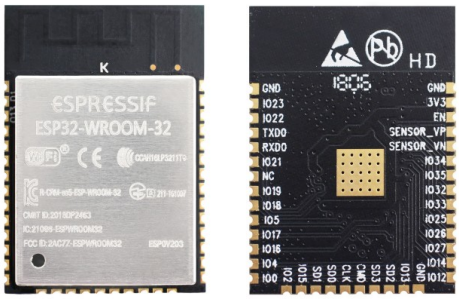

图 1: ESP32-WROOM-32 模组（正反面图）

相关文档

- 《ESP32-WROOM-32 技术规格书》(PDF)；
- ESP32-WROOM-32 参考设计，包括原理图（由 OrCAD Capture 绘制）、PCB 布局（由 Mentor PADS 绘制）、GERBER 文件和 BOM 清单。

ESP32-WROOM-32D/ESP32-WROOM-32U 模组

两款模组均集成了 ESP32-D0WD 芯片，与*ESP32-WROOM-32 模组* 集成的 ESP32-D0WDQ6 相比，ESP32-D0WD 芯片的封装更小，在 PCB 上占用的面积更小。

有关这两款模组的详细信息，请查看模组 中的表格和 乐鑫产品订购信息。

ESP32-WROOM-32U 是整个 WROOM/WROVER 模组系列中最小的模组。

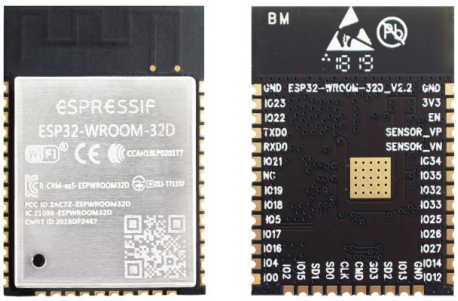

图 2: ESP32-WROOM-32D 模组（正反面图）

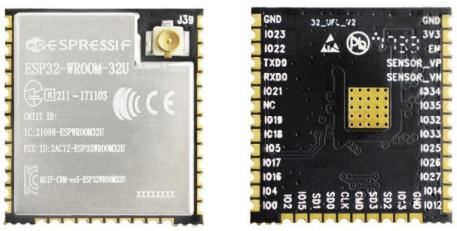

图 3: ESP32-WROOM-32U 模组（正反面图）

相关文档

- 《ESP32-WROOM-32D/ESP32-WROOM-32U 技术规格书》(PDF)

ESP32-SOLO-1 模组

ESP32-SOLO-1 模组是 ESP32-WROOM-32D 模组的简化版本，内置一个 ESP32 单核芯片，支持高达 160 MHz 的时钟频率。

有关此模组的详细信息，请查看模组 中的表格和 乐鑫产品订购信息。

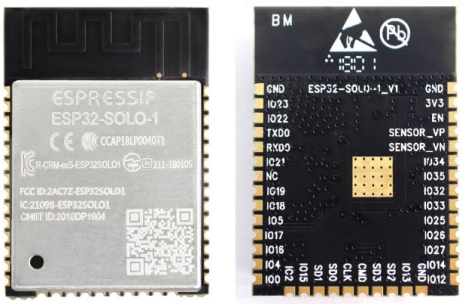

图 4: ESP32-SOLO-1 模组（正反面图）

相关文档

- 《ESP32-SOLO-1 技术规格书》(PDF)

ESP32-WROVER 系列模组

ESP32-WROVER 系列模组在 ESP32-WROOM-32x 模组的基础上进行了一些修改，其中包含一些功能升级，并新增 8 MB SPI PSRAM（伪静态 RAM）。

有关该模组的详细信息，请查看模组 中的表格和 乐鑫产品订购信息。

- **ESP32-WROVER (PCB)** 模组和 **ESP32-WROVER (IPEX)** 模组内置 1.8 V PSRAM，支持 144 MHz 时钟频率。
- **ESP32-WROVER-B** 模组和 **ESP32-WROVER-IB** 模组内置 3.3 V PSRAM，支持 133 MHz 时钟频率。

下图为配备有 PCB 天线的 ESP32-WROVER 模组：

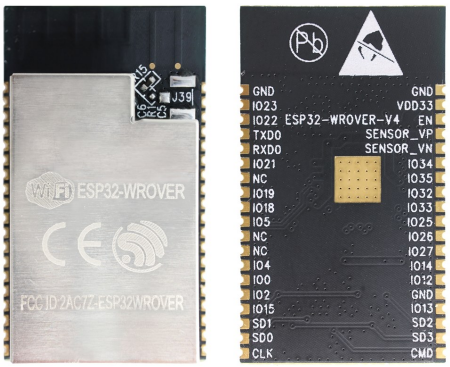

图 5: ESP32-WROVER 模组（正反面图）

相关文档

- 《ESP32-WROVER 技术规格书》(PDF)
- 《ESP32-WROVER-B 技术规格书》(PDF)
- 《ESP-PSRAM64 & ESP-PSRAM64H 技术规格书》(PDF)
- ESP32-WROVER 参考设计 包含原理图（由 OrCAD Capture 绘制）、PCB 布局（由 Mentor PADS 绘制）、GERBER 文件和 BOM 清单。

ESP32-PICO-D4 模组

ESP32-PICO-D4 模组是一款 SiP 模组，无缝集成了所有外设，包括：

- 4 MB flash
- 晶振
- 滤波电容
- RF 匹配电路

有关该模组的详细信息，请查看 乐鑫产品订购信息。

相关文档

- 《ESP32-PICO-D4 技术规格书》(PDF)

3.1.2 ESP32 开发板

ESP32 系列开发板功能各异，具体有以下不同点：

- 访问的 ESP32 GPIO 管脚不同；
- 接口不同，包括 USB 和 JTAG；
- 外设不同，包括 TouchPad、LCD 显示屏、SD 卡槽和相机模组排母等。

ESP32-PICO-KIT V4.1 开发板

ESP32-PICO-KIT V4.1 开发板是基于 ESP32 的最小开发板，内置连接至电脑 USB 端口所需的所有组件，同时设有排针，可直接将此开发板插接于迷你面包板。

ESP32-PICO-KIT V4.1 开发板集成了*ESP32-PICO-D4 模组*，只需在 PCB (20 x 52 mm) 上添加少许外部组件即可构成一个功能齐全的开发板。这部分外部组件包括天线、LDO、USB 至 UART 桥接器、一个重置按钮和一个固件下载模式激活按钮。

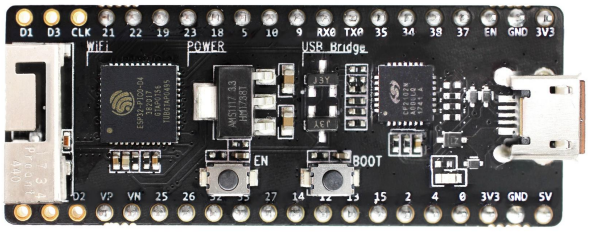

图 6: ESP32-PICO-KIT V4.1 开发板

与 ESP32-PICO-KIT V4 相比，ESP32-PICO-KIT V4.1 开发板支持 CP2102N USB 至 UART 桥接器，可提供高达 3 Mbps 的传输速率。

相关文档

- *ESP32-PICO-KIT V4/V4.1 入门指南*
- ESP32-PICO-KIT V4.1 原理图 (PDF)
- ESP32-PICO-KIT 参考设计，包含原理图（由 OrCAD Capture 绘制）、PCB 布局（由 Mentor PADS 绘制）、GERBER 文件和 BOM 清单。
- 《ESP32-PICO-D4 技术规格书》(PDF)

较早版本开发板

- *ESP32-PICO-KIT V4*
- *ESP32-PICO-KIT V3*

ESP32 DevKitC V4 开发板

ESP32 DevKitC V4 开发板是一款小巧实用的开发板，具备以下特色功能：

- 集成了*ESP32-WROOM-32 模组*
- USB 转串口编程接口同时可为开发板供电
- 设有排针
- 设有重置按钮和固件下载模式激活按钮
- 以及其他组件

与较早版本的*ESP32 Core Board V2 / ESP32 DevKitC* 相比，ESP32 DevKitC V4 开发板集成了*ESP32-WROVER 系列模组* （而非 ESP32-WROOM-32 模组），同时内置 CP2102N 芯片，支持更高波特率。

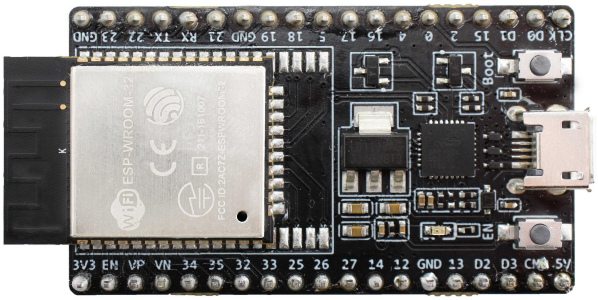

图 7: ESP32 DevKitC V4 开发板

相关文档

- *ESP32-DevKitC V4 入门指南*
- ESP32-DevKitC 原理图 (PDF)
- ESP32-DevKitC 参考设计，包含原理图（由 OrCAD Capture 绘制）、PCB 布局（由 Mentor PADS 绘制）、GERBER 文件和 BOM 清单。
- CP210x USB 至 UART 桥 VCP 驱动器

较早版本开发板

- *ESP32 Core Board V2 / ESP32 DevKitC*

ESP-WROVER-KIT V4.1 开发板

ESP-WROVER-KIT V4.1 开发板具备以下特色功能：

- USB 转双串口转换器（用于后续编程）
- JTAG 调试接口
- MicroSD 卡槽

- 3.2” SPI LCD 显示屏
- 相机模组排母
- RGB 发光二极管
- 支持 32.768 kHz 晶振输入用于 RTC 及低功耗模式操作

ESP-WROVER-KIT V4.1 开发板支持 USB 供电或标准的 5 毫米电源插座供电，可使用跳线选择电源，或使用独立的开关控制电源。

ESP-WROVER-KIT V4.1 开发板集成了 ESP-WROVER-B 模组，该模组集成了 8 MB PSRAM，方便用户灵活扩展存储空间，增强数据处理能力。ESP-WROVER-KIT V4.1 开发板还可以集成模组 中所述的 ESP 其他版本模组。

与*ESP-WROVER-KIT V3* 相比，ESP-WROVER-KIT V4.1 开发板在设计上有以下改动：

- JP8、JP11 和 JP13 合并成了一个 JP2。
- USB 连接器的固定脚改为直插式，并移至板子右下角。
- R61 已变更为零欧姆电阻。
- 基于测试结果和采购选择，部分组件已由功能对等组件替代，例如 EN 和 Boot 按钮。

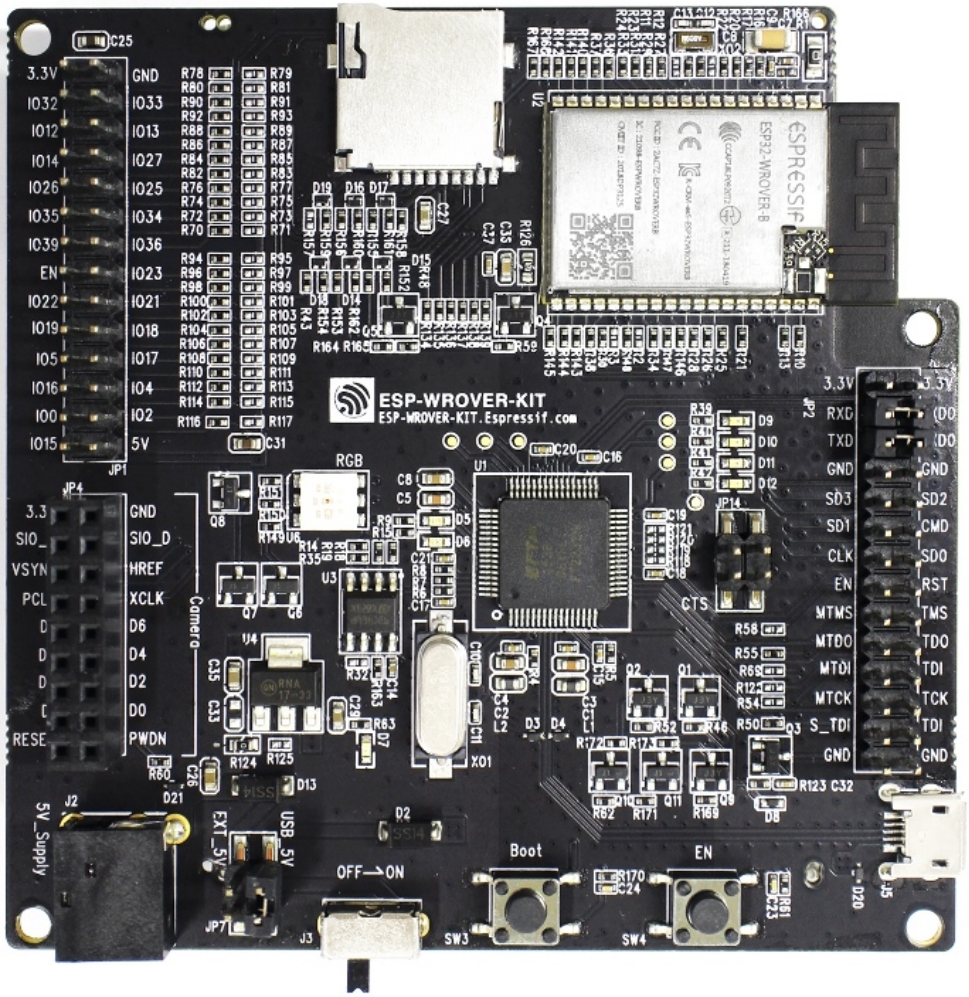

图 8: ESP-WROVER-KIT V4.1 开发板

上图所示开发板集成了 ESP32-WROVER-B 模组。

相关文档

- *ESP-WROVER-KIT V4.1 入门指南*
- ESP-WROVER-KIT V4.1 原理图 (PDF)
- *JTAG 调试*
- FTDI 虚拟 COM 端口驱动

较早版本开发板

- *ESP-WROVER-KIT V3*
- *ESP-WROVER-KIT V2*
- *ESP-WROVER-KIT V1 / ESP32 DevKitJ V1*

3.1.3 相关文档

- *ESP32 模组与开发板（历史版本）*

3.2 ESP32 模组与开发板（历史版本）

本节列出了旧版或已停产 ESP32 模组和开发板的概述和文档链接，便于有意购买和使用旧版模组和开发板的用户参考。

3.2.1 模组

到目前为止没有模组停止更新或停产。

3.2.2 开发板

要查看最新的开发板，请点击*ESP32 系列模组和开发板*。

ESP32-PICO-KIT V4

乐鑫最小的 ESP32 系列开发板，集成所有直接连接到 PC 的 USB 端口必需组件，采用插入迷你面包板的排针。该开发板搭载集成了 4 MB flash、晶振、滤波电容器和射频匹配网络的 ESP32-PICO-D4 模组，仅需在 20 x 52 毫米的 PCB 板上安装少量外部组件，包括天线、LDO、USB 至 UART 桥接器、复位按键和下载按键。

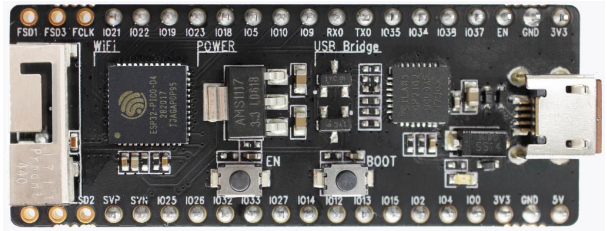

图 9: ESP32-PICO-KIT V4

和 ESP32-PICO-KIT V3 相比，V4 版本改进了布局，将引出的管脚数量从 20 个减少至 17 个，可以更好地与迷你面包板匹配。

相关文档

- *ESP32-PICO-KIT V4/V4.1 入门指南*
- ESP32-PICO-KIT V4 原理图 (PDF)
- ESP32-PICO-D4 技术规格书 (PDF)

ESP32-PICO-KIT V3

第一款搭载乐鑫 ESP32-PICO-D4 模组的迷你开发板。该开发板包含用于烧录和调试的 USB 端口，以及两排可以插入面包板的排针，共计 20 个。ESP32-PICO-D4 模组尺寸为 7 x 7 毫米，体积小，除了双核 CPU 之外还集成了 4 MB flash、晶振和天线，仅需再安装几个外部组件。模组和所有组件最终装配到 20 x 52 毫米的 PCB 板上，构成开发板。

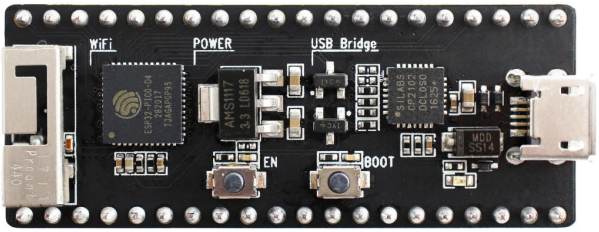

图 10: ESP32-PICO-KIT V3

相关文档

- *ESP32-PICO-KIT V3 入门指南*
- ESP32-PICO-KIT V3 原理图 (PDF)
- ESP32-PICO-D4 技术规格书 (PDF)

ESP32 Core Board V2 / ESP32 DevKitC

搭载了 ESP-WROOM-32 模组的小型便捷开发板，板上管脚引出，外围器件少。该款开发板包含 USB 转串口（也是开发板的电源接口）、复位按键和下载按键。

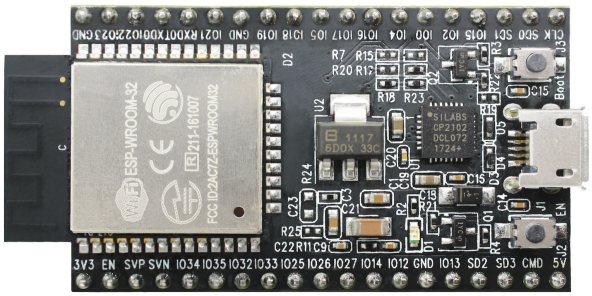

图 11: ESP32 Core Board V2 / ESP32 DevKitC

相关文档

- *ESP32-DevKitC V2 入门指南*
- ESP32 DevKitC V2 原理图 (PDF)
- CP210x USB 至 UART 桥接器 VCP 驱动

ESP-WROVER-KIT V3

ESP-WROVER-KIT V3 开发板上装有用于编程的 USB 转双串口和用于调试的 JTAG 接口，由 USB 接口或 5 毫米标准电源插座供电。电源通过跳线选择，有单独的开关。该款开发板上还有 MicroSD 卡槽、3.2" SPI LCD 屏幕、连接摄像头的专用排针、用于诊断的 RGB 二极管和内部 RTC 在低功耗模式下可操作的 32.768 kHz 晶振。

和此前版本的 ESP-WROVER-KIT 开发板一样，V3 版本可以搭载*ESP32-WROOM-32 模组* 或*ESP32-WROVER 系列模组*。

这是第一款默认搭载*ESP32-WROVER 系列模组* 的 ESP-WROVER-KIT。V3 版本还针对自举引脚的信号调节和联锁做了少量设计变动。此外，V3 版本还在 WROVER/WROOM 模组和 VDD33 之间加了一个 0 欧电阻 (R166)，可以在测量电流时直接移除或替换成分流电阻，便于分析 ESP32 不同操作模式下的功耗。变动的设计在原理图中用绿色圈出。

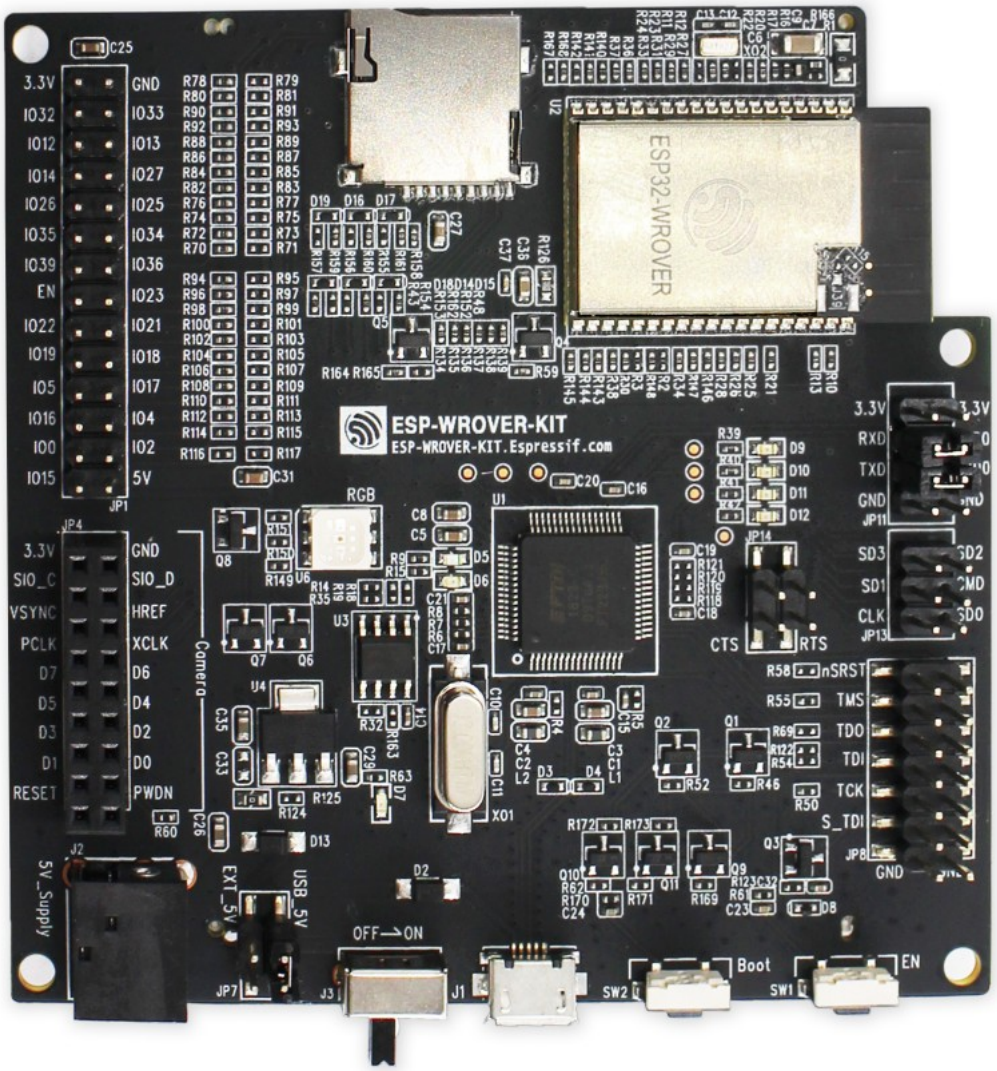

图 12: ESP-WROVER-KIT V3

摄像头排针变为摄像头排母，开发板组焊层为哑光黑色。图片中的开发板搭载的是*ESP32-WROVER 系列模组*。

相关文档

- *ESP-WROVER-KIT V3 入门指南*
- ESP-WROVER-KIT V3 原理图 (PDF)
- *JTAG 调试*
- FTDI 虚拟 COM 端口驱动

ESP-WROVER-KIT V2

ESP32 DevKitJ V1 的升级版，根据 DevKitJ 使用中发现的问题优化了设计，比如增加对 SD 卡的支持。该款开发板默认搭载 ESP-WROOM-32 模组。

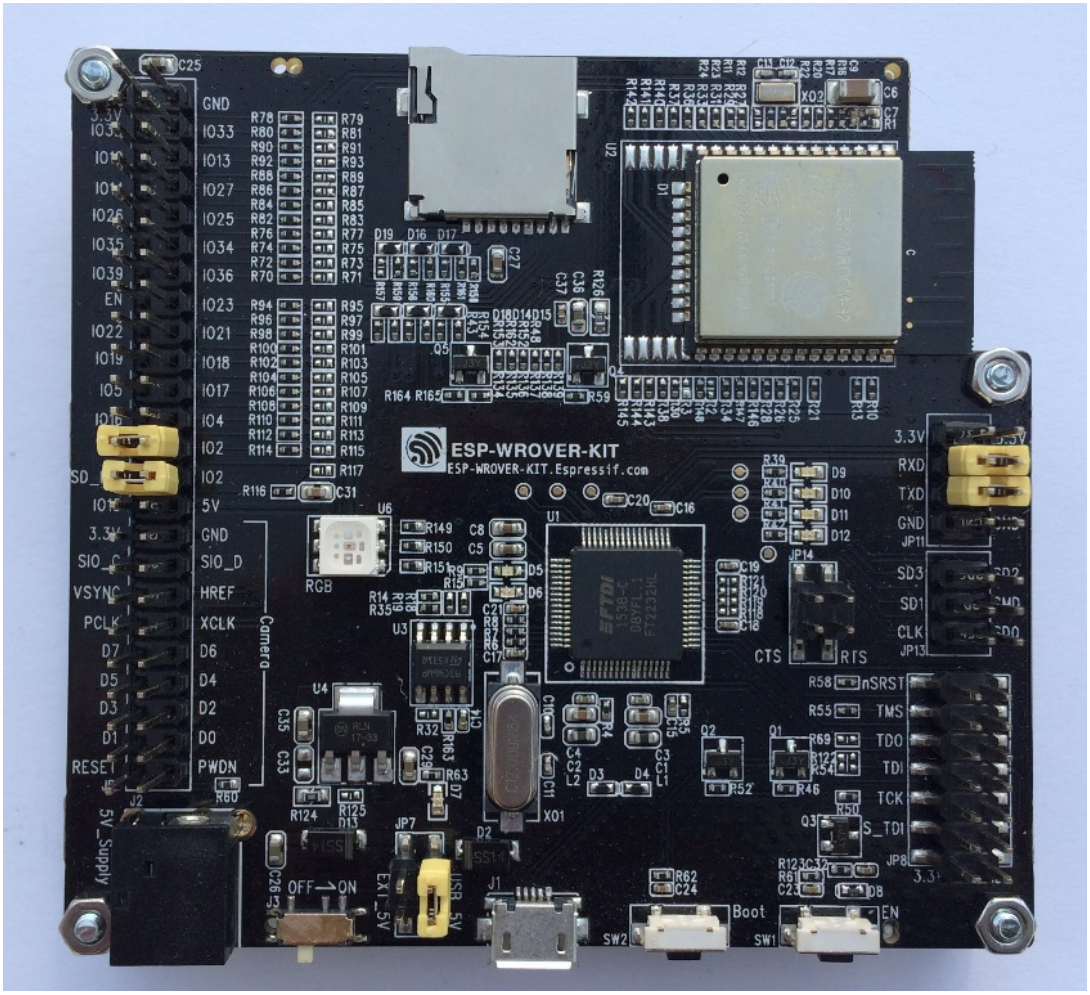

图 13: ESP-WROVER-KIT V2

和此前的版本有所不同，这一版开发板采用黑色抛光和摄像头排针。

相关文档

- *ESP-WROVER-KIT V2 入门指南*
- ESP-WROVER-KIT V2 原理图 (PDF)
- *JTAG 调试*
- FTDI 虚拟 COM 端口驱动

ESP-WROVER-KIT V1 / ESP32 DevKitJ V1

ESP-WROVER-KIT 开发板初版，板上搭载 ESP-WROOM-32 模组。

ESP-WROVER-KIT 开发板上装有用于编程的 USB 转双串口和用于调试的 JTAG 接口，由 USB 接口或 5 毫米标准电源插座供电。电源通过跳线选择，有单独的开关。该款开发板上还有 MicroSD 卡槽、3.2" SPI LCD 屏幕、连接摄像头的专用排针、用于诊断的 RGB 二极管和内部 RTC 在低功耗模式下可操作的 32.768 kHz 晶振。

ESP-WROVER-KIT 所有版本均适配 ESP-WROOM-32 或 ESP32-WROVER 模组。

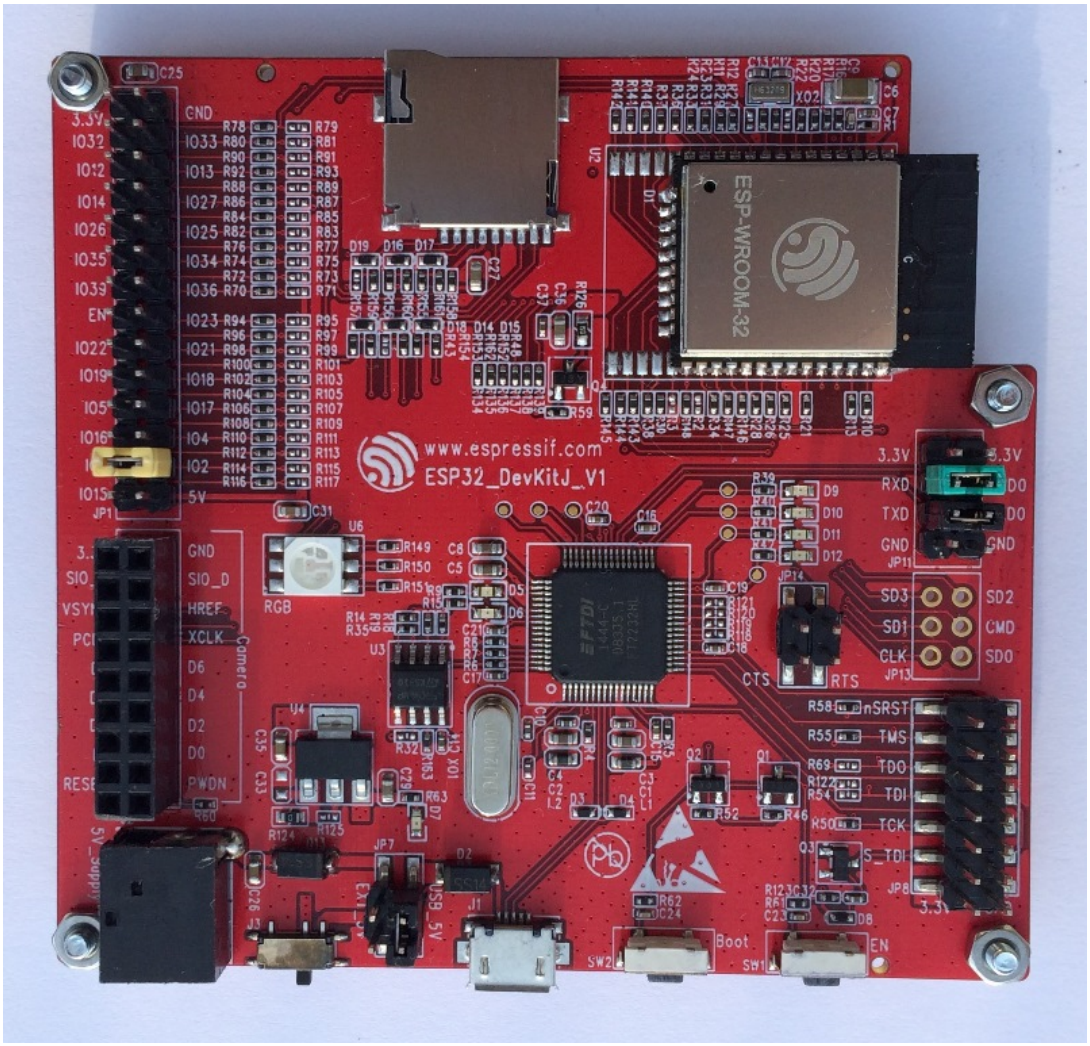

图 14: ESP-WROVER-KIT V1 / ESP32 DevKitJ V1

该款开发板有红色阻焊层。

相关文档

- ESP-WROVER-KIT V1 原理图 (PDF)
- *JTAG 调试*
- FTDI 虚拟 COM 端口驱动

ESP32 Demo Board V2

首款功能齐全的评估板，板上装有排针、DIP 开关、USB 转串口、复位和启动模式按键、电源开关、10 个触控板和连接 LCD 屏幕的专用排针。

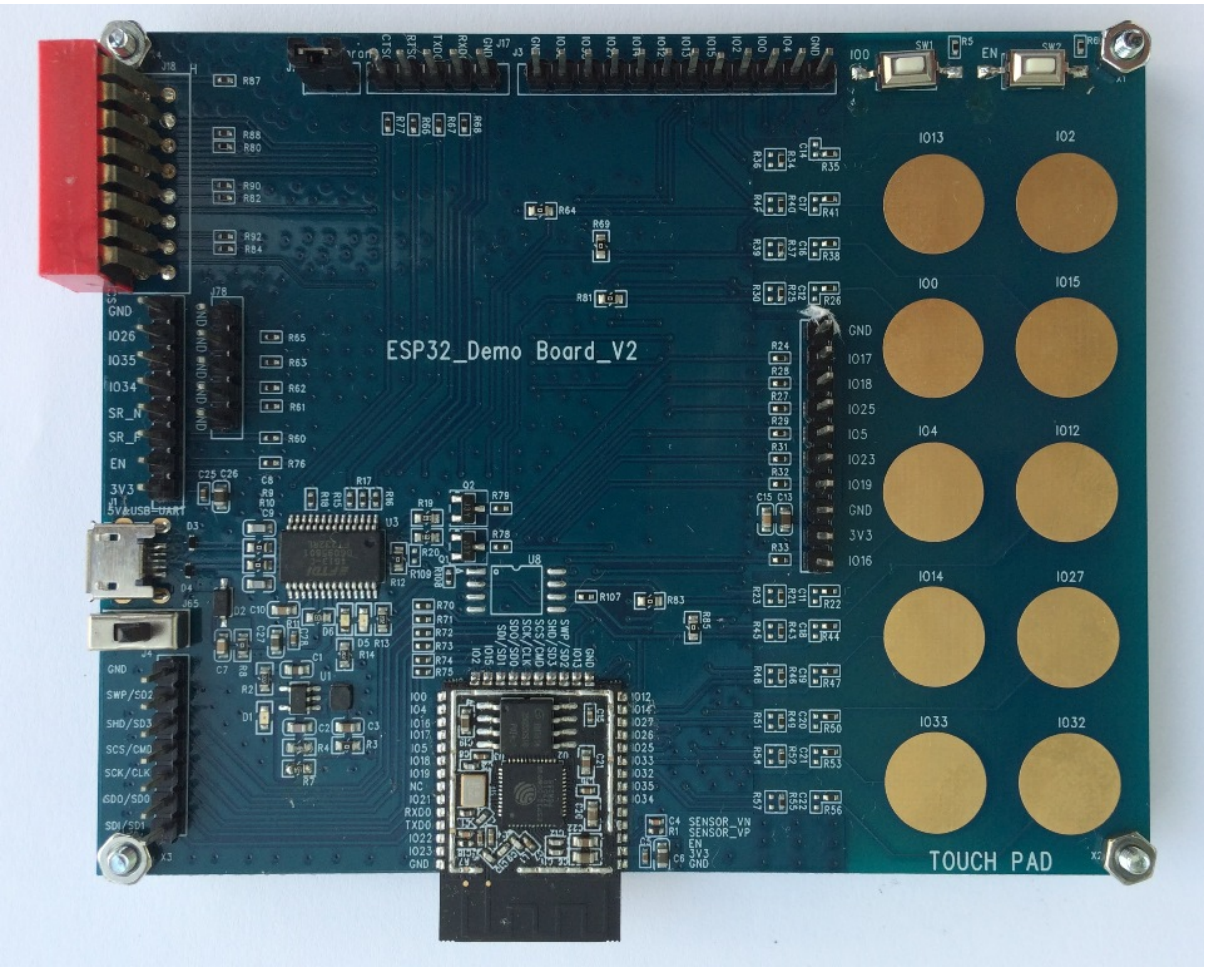

图 15: ESP32 Demo Board V2

该款开发板已停产。

相关文档

- ESP32 Demo Board V2 Schematic (PDF)
- FTDI 虚拟 COM 端口驱动

3.2.3 相关文档

- *ESP32 系列模组和开发板*

3.3 Chip Series Comparison

The comparison below covers key features of chips supported by ESP-IDF. For the full list of features please refer to respective datasheets in Section *Related Documents*.

表 1: Chip Series Comparison

Feature	ESP32 Series	ESP32-S2 Series	ESP32-C3 Series
Launch year	2016	2020	2020
Variants	See ESP32 Datasheet (PDF)	See ESP32-S2 Datasheet (PDF)	See ESP32-C3 Datasheet (PDF)
Core	Xtensa® dual-core 32-bit LX6 with 600 MIPS (in total); 200 MIPS for ESP32-U4WDH/ESP32-S0WD (single-core variants); 400 MIPS for ESP32-D2WD	Xtensa® single-core 32-bit LX7 with 300 MIPS	32-bit single-core RISC-V
Wi-Fi protocols	802.11 b/g/n, 2.4 GHz	802.11 b/g/n, 2.4 GHz	802.11 b/g/n, 2.4 GHz
Bluetooth®	Bluetooth v4.2 BR/EDR and Bluetooth Low Energy	✖	Bluetooth 5.0
Typical frequency	240 MHz (160 MHz for ESP32-S0WD, ESP32-D2WD, and ESP32-U4WDH)	240 MHz	160 MHz
SRAM	520 KB	320 KB	400 KB
ROM	448 KB for booting and core functions	128 KB for booting and core functions	384 KB for booting and core functions
Embedded flash	2 MB, 4 MB, or none, depending on variants	2 MB, 4 MB, or none, depending on variants	4 MB or none, depending on variants
External flash	Up to 16 MB device, address 11 MB + 248 KB each time	Up to 1 GB device, address 11.5 MB each time	Up to 16 MB device, address 8 MB each time
External RAM	Up to 8 MB device, address 4 MB each time	Up to 1 GB device, address 11.5 MB each time	✖
Cache	✓ Two-way set associative	✓ Four-way set associative, independent instruction cache and data cache	✓ Eight-way set associative, 32-bit data/instruction bus width
Peripherals			
ADC	Two 12-bit, 18 channels	Two 13-bit, 20 channels	Two 12-bit SAR ADCs, at most 6 channels
DAC	Two 8-bit channels	Two 8-bit channels	✖
Temperature sensor	✖	1	1
Touch sensor	10	14	✖
Hall sensor	1	✖	✖
GPIO	34	43	22
SPI	4	4 with more modes, compared with ESP32	3
LCD interface	1	1	✖
UART	3	2 [1]	2 [1]
I2C	2	2	1
I2S	2, can be configured to operate with 8/16/32/40/48-bit resolution as an input or output channel.	1, can be configured to operate with 8/16/24/32/48/64-bit resolution as an input or output channel.	1, can be configured to operate with 8/16/24/32-bit resolution as an input or output channel.

下页继续

表 1 – 续上页

Feature	ESP32 Series	ESP32-S2 Series	ESP32-C3 Series
Camera interface	1	1	✖
DMA	Dedicated DMA to UART, SPI, I2S, SDIO slave, SD/MMC host, EMAC, BT, and Wi-Fi	Dedicated DMA to UART, SPI, AES, SHA, I2S, and ADC Controller	General-purpose, 3 TX channels, 3 RX channels
RMT	8 channels	4 channels [1], can be configured to TX/RX channels	4 channels [2], 2 TX channels, 2 RX channels
Pulse counter	8 channels	4 channels [1]	✖
LED PWM	16 channels	8 channels [1]	6 channels [2]
USB OTG	✖	1	✖
TWAI® controller (compatible with ISO 11898-1)	1	1	1
SD/SDIO/MMC host controller	1	✖	✖
SDIO slave controller	1	✖	✖
Ethernet MAC	1	✖	✖
ULP	ULP FSM	PicoRV32 core with 8 KB SRAM, ULP FSM with more instructions	✖
Debug Assist	✖	✖	1
Security			
Secure boot	✓	✓ Faster and safer, compared with ESP32	✓ Faster and safer, compared with ESP32
Flash encryption	✓	✓ Support for PSRAM encryption. Safer, compared with ESP32	✓ Safer, compared with ESP32
OTP	1024-bit	4096-bit	4096-bit
AES	✓ AES-128, AES-192, AES-256 (FIPS PUB 197)	✓ AES-128, AES-192, AES-256 (FIPS PUB 197)	✓ AES-128, AES-256 (FIPS PUB 197)
HASH	SHA-1, SHA-256, SHA-384, SHA-512 (FIPS PUB 180-4)	SHA-1, SHA-224, SHA-256, SHA-384, SHA-512, SHA-512/224, SHA-512/256, SHA-512/t (FIPS PUB 180-4); DMA support	SHA-1, SHA-224, SHA-256 (FIPS PUB 180-4)
RSA	Up to 4096 bits	Up to 4096 bits, improved acceleration options compared with ESP32	Up to 3072 bits
RNG	✓	✓	✓
HMAC	✖	✓	✓
Digital signature	✖	✓	✓
XTS	✖	✓ XTS-AES-128, XTS-AES-256	✓ XTS-AES-128
Other			

下页继续

表 1 – 续上页

Feature	ESP32 Series	ESP32-S2 Series	ESP32-C3 Series
Deep-sleep (ULP sensor-monitored pattern)	100 µA (when ADC work with a duty cycle of 1%)	22 µA (when touch sensors work with a duty cycle of 1%)	No such pattern
Size	QFN48 5*5, 6*6, depending on variants	QFN56 7*7	QFN32 5*5

Note 1: Reduced chip area compared with ESP32

Note 2: Reduced chip area compared with ESP32 and ESP32-S2

Note 3: Die size: ESP32-C3 < ESP32-S2 < ESP32

3.3.1 Related Documents

- ESP32 Datasheet (PDF)
- ESP32-PICO Datasheets (PDF)
  - ESP32-PICO-D4
  - ESP32-PICO-V3
  - ESP32-PICO-V3-02
- ESP32-S2 Datasheet (PDF)
- ESP32-C3 Datasheet (PDF)
- ESP Product Selector

Chapter 4

API 指南

4.1 应用层跟踪库

4.1.1 概述

为了分析应用程序的行为，IDF 提供了一个有用的功能：应用层跟踪。这个功能以库的形式提供，可以通过 menuconfig 开启。此功能使得用户可以在程序运行开销很小的前提下，通过 JTAG 接口在主机和 ESP32 之间传输任意数据。

开发人员可以使用这个功能库将应用程序的运行状态发送给主机，在运行时接收来自主机的命令或者其他类型的信息。该库的主要使用场景有：

1. 收集应用程序特定的数据，具体请参阅特定应用程序的跟踪
2. 轻量级的日志记录，具体请参阅记录日志到主机
3. 系统行为分析，具体请参阅基于 *SEGGER SystemView* 的系统行为分析

使用 JTAG 接口的跟踪组件工作示意图：

4.1.2 运行模式

该库支持两种操作模式：

后验模式： 这是默认的模式，该模式不需要和主机进行交互。在这种模式下，跟踪模块不会检查主机是否已经从 *HW UP BUFFER* 缓冲区读走所有数据，而是直接使用新数据覆盖旧数据。该模式在用户仅对最新的跟踪数据感兴趣时会很有用，例如分析程序在崩溃之前的行为。主机可以稍后根据用户的请求来读取数据，例如通过特殊的 OpenOCD 命令（假如使用了 JTAG 接口）。

流模式： 当主机连接到 ESP32 时，跟踪模块会进入此模式。在这种模式下，跟踪模块在新数据写入 *HW UP BUFFER* 之前会检查其中是否有足够的空间，并在必要的时候等待主机读取数据并释放足够的内存。用户会将最长的等待时间作为超时时间参数传递给相应的 API 函数，如果超时时间是个有限值，那么应用程序有可能会因为超时而将待写的数据丢弃。尤其需要注意，如果在讲究时效的代码中（如中断处理函数，操作系统调度等）指定了无限的超时时间，那么系统会产生故障。为了避免丢失此类关键数据，开发人员可以通过在 menuconfig 中开启*CONFIG_APPTRACE_PENDING_DATA_SIZE_MAX* 选项来启用额外的数据缓冲区。此宏还指定了在上述条件下可以缓冲的数据大小，它有助于缓解由于 USB 总线拥塞等原因导致的向主机传输数据间歇性减缓的状况。但是，当跟踪数据流的平均比特率超过硬件接口的能力时，它也无能为力。

4.1.3 配置选项与依赖项

使用此功能需要在主机端和目标端做相应的配置：

1. **主机端：** 应用程序跟踪是通过 JTAG 来完成的，因此需要在主机上安装并运行 OpenOCD。相关详细信息请参阅*JTAG Debugging*。

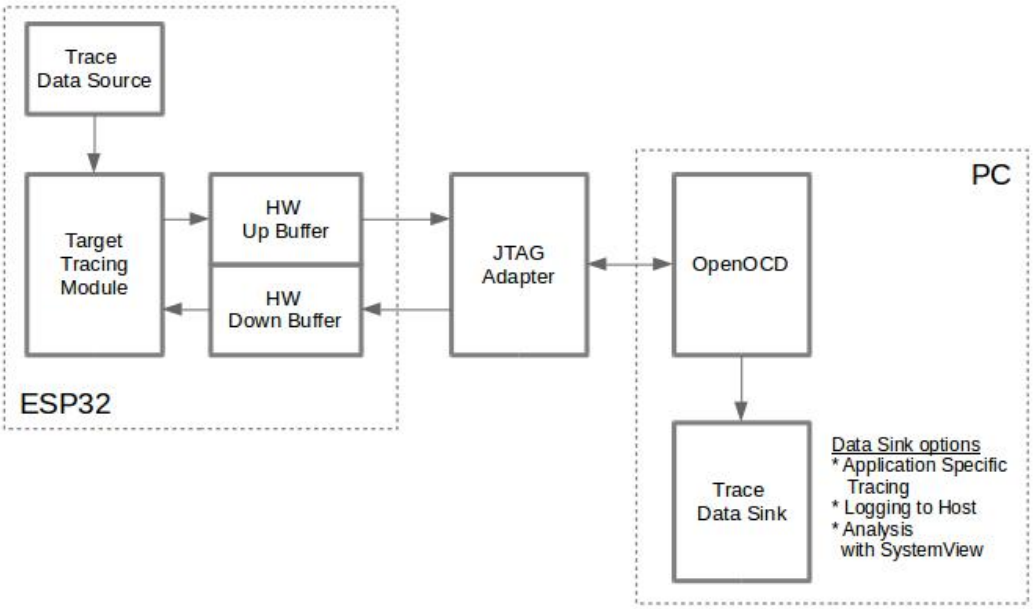

图 1: 使用 JTAG 接口的跟踪组件

2. **目标端：** 在 menuconfig 中开启应用程序跟踪功能。*Component config* > *Application Level Tracing* 菜单允许选择跟踪数据的传输目标（具体用于传输的硬件接口），选择任一非 None 的目标都会自动开启 `CONFIG_APPTRACE_ENABLE` 这个选项。

注解： 为了实现更高的数据速率并降低丢包率，建议优化 JTAG 的时钟频率，使其达到能够稳定运行的最大值。详细信息请参阅*优化 JTAG 的速度*。

以下为前述未提及的另外两个 menuconfig 选项：

1. *Threshold for flushing last trace data to host on panic*（*CONFIG_APPTRACE_POSTMORTEM_FLUSH_THRESH*）。由于在 JTAG 上工作的性质，此选项是必选项。在该模式下，跟踪数据以 16 KB 数据块的形式曝露给主机。在后验模式中，当一个块被填充时，它会曝露给主机，而之前的块会变得不可用。换句话说，跟踪数据以 16 KB 的粒度进行覆盖。在发生 panic 的时候，当前输入块的最新数据将会被曝露给主机，主机可以读取它们以进行后续分析。如果系统发生 panic 的时候仍有少量数据还没来得及曝光给主机，那么之前收集的 16 KB 的数据将丢失，主机只能看到非常少的最新的跟踪部分，它可能不足以用来诊断问题所在。此 menuconfig 选项允许避免此类情况，它可以控制在发生 panic 时刷新数据的阈值，例如用户可以确定它需要不少于 512 字节的最新跟踪数据，所以如果在发生 panic 时待处理的数据少于 512 字节，它们不会被刷新，也不会覆盖之前的 16 KB。该选项仅在后验模式和 JTAG 工作时有意义。
2. *Timeout for flushing last trace data to host on panic*（*CONFIG_APPTRACE_ONPANIC_HOST_FLUSH_TMO*）。该选项仅在流模式下才起作用，它控制跟踪模块在发生 panic 时等待主机读取最新数据的最长时间。

4.1.4 如何使用这个库

该库提供了用于在主机和 ESP32 之间传输任意数据的 API。当在 menuconfig 中启用时，目标应用程序的跟踪模块会在系统启动时自动初始化，因此用户需要做的就是调用相应的 API 来发送、接收或者刷新数据。

特定应用程序的跟踪

通常，用户需要决定在每个方向上待传输数据的类型以及如何解析（处理）这些数据。要想在目标和主机之间传输数据，用户必须要执行以下几个步骤。

1. 在目标端，用户需要实现将跟踪数据写入主机的算法，下面的代码片段展示了如何执行此操作。

```
#include "esp_app_trace.h"
...
char buf[] = "Hello World!";
esp_err_t res = esp_apptrace_write(ESP_APPTRACE_DEST_TRAX, buf, strlen(buf),␣
↪ESP_APPTRACE_TMO_INFINITE);
if (res != ESP_OK) {
    ESP_LOGE(TAG, "Failed to write data to host!");
    return res;
}
```

`esp_apptrace_write()` 函数使用 memcpy 把用户数据复制到内部缓存中。在某些情况下，使用 `esp_apptrace_buffer_get()` 和 `esp_apptrace_buffer_put()` 函数会更加理想，它们允许开发人员自行分配缓冲区并填充。下面的代码片段展示了如何执行此操作。

```
#include "esp_app_trace.h"
...
int number = 10;
char *ptr = (char *)esp_apptrace_buffer_get(ESP_APPTRACE_DEST_TRAX, 32, 100/
↪*tmo in us*/);
if (ptr == NULL) {
    ESP_LOGE(TAG, "Failed to get buffer!");
    return ESP_FAIL;
}
sprintf(ptr, "Here is the number %d", number);
esp_err_t res = esp_apptrace_buffer_put(ESP_APPTRACE_DEST_TRAX, ptr, 100/*tmo␣
↪in us*/);
if (res != ESP_OK) {
    /* in case of error host tracing tool (e.g. OpenOCD) will report␣
↪incomplete user buffer */
    ESP_LOGE(TAG, "Failed to put buffer!");
    return res;
}
```

另外，根据实际项目的需要，用户可能希望从主机接收数据。下面的代码片段展示了如何执行此操作。

```
#include "esp_app_trace.h"
...
char buf[32];
char down_buf[32];
size_t sz = sizeof(buf);

/* config down buffer */
esp_apptrace_down_buffer_config(down_buf, sizeof(down_buf));
/* check for incoming data and read them if any */
esp_err_t res = esp_apptrace_read(ESP_APPTRACE_DEST_TRAX, buf, &sz, 0/*do not␣
↪wait*/);
if (res != ESP_OK) {
    ESP_LOGE(TAG, "Failed to read data from host!");
    return res;
}
if (sz > 0) {
    /* we have data, process them */
    ...
}
```

`esp_apptrace_read()` 函数使用 memcpy 来把主机端的数据复制到用户缓存区。在某些情况下，使用 `esp_apptrace_down_buffer_get()` 和 `esp_apptrace_down_buffer_put()` 函

数可能更为理想。它们允许开发人员占用一块读缓冲区并就地进行有关处理操作。下面的代码片段展示了如何执行此操作。

```
#include "esp_app_trace.h"
...
char down_buf[32];
uint32_t *number;
size_t sz = 32;

/* config down buffer */
esp_apptrace_down_buffer_config(down_buf, sizeof(down_buf));
char *ptr = (char *)esp_apptrace_down_buffer_get(ESP_APPTRACE_DEST_TRAX, &sz,␣
↪100/*tmo in us*/);
if (ptr == NULL) {
    ESP_LOGE(TAG, "Failed to get buffer!");
    return ESP_FAIL;
}
if (sz > 4) {
    number = (uint32_t *)ptr;
    printf("Here is the number %d", *number);
} else {
    printf("No data");
}
esp_err_t res = esp_apptrace_down_buffer_put(ESP_APPTRACE_DEST_TRAX, ptr, 100/
↪*tmo in us*/);
if (res != ESP_OK) {
    /* in case of error host tracing tool (e.g. OpenOCD) will report␣
↪incomplete user buffer */
    ESP_LOGE(TAG, "Failed to put buffer!");
    return res;
}
```

2. 下一步是编译应用程序的镜像并将其下载到目标板上，这一步可以参考文档构建并烧写。
3. 运行 OpenOCD（参见*JTAG 调试*）。
4. 连接到 OpenOCD 的 telnet 服务器，在终端执行如下命令 `telnet <oocd_host> 4444`。如果在运行 OpenOCD 的同一台机器上打开 telnet 会话，您可以使用 `localhost` 替换上面命令中的 `<oocd_host>`。
5. 使用特殊的 OpenOCD 命令开始收集待跟踪的命令，此命令将传输跟踪数据并将其重定向到指定的文件或套接字（当前仅支持文件作为跟踪数据目标）。相关命令的说明请参阅启动调试器 。
6. 最后一步是处理接收到的数据，由于数据格式由用户定义，因此处理阶段超出了本文档的范围。数据处理的范例可以参考位于 `$IDF_PATH/tools/esp_app_trace` 下的 Python 脚本 `app-trace_proc.py`（用于功能测试）和 `logtrace_proc.py`（请参阅记录日志到主机 章节中的详细信息）。

OpenOCD 应用程序跟踪命令 *HW UP BUFFER* 在用户数据块之间共享，并且会替 API 的调用者（在任务或者中断上下文中）填充分配到的内存。在多线程环境中，正在填充缓冲区的任务/中断可能会被另一个高优先级的任务/中断抢占，有可能发生主机读取还未准备好的用户数据的情况。为了处理这样的情况，跟踪模块在所有用户数据块之前添加一个数据头，其中包含有分配的用户缓冲区的大小（2 字节）和实际写入的数据长度（2 字节），也就是说数据头总共长 4 字节。负责读取跟踪数据的 OpenOCD 命令在读取到不完整的用户数据块时会报错，但是无论如何它都会将整个用户数据块（包括还未填充的区域）的内容放到输出文件中。

下面是 OpenOCD 应用程序跟踪命令的使用说明。

注解： 目前，OpenOCD 还不支持将任意用户数据发送到目标的命令。

命令用法：

```
esp32 apptrace [start <options>] | [stop] | [status] | [dump <cores_num>
<outfile>]
```

子命令：

start 开始跟踪（连续流模式）。
stop 停止跟踪。
status 获取跟踪状态。
dump 转储所有后验模式的数据。

Start 子命令的语法：

```
start <outfile> [poll_period [trace_size [stop_tmo [wait4halt
[skip_size]]]]
```

outfile 用于保存来自两个 CPU 的数据文件的路径，该参数需要具有以下格式：`file://path/to/file`。
poll_period 轮询跟踪数据的周期（单位：毫秒），如果大于 0 则以非阻塞模式运行。默认为 1 毫秒。
trace_size 最多要收集的数据量（单位：字节），接收到指定数量的数据后将会停止跟踪。默认情况下是 -1（禁用跟踪大小停止触发器）。
stop_tmo 空闲超时（单位：秒），如果指定的时间段内都没有数据就会停止跟踪。默认为 -1（禁用跟踪超时停止触发器）。还可以将其设置为比目标跟踪命令之间的最长暂停值更长的值（可选）。
wait4halt 如果设置为 0 则立即开始跟踪，否则命令等待目标停止（复位，打断点等），然后自动恢复它并开始跟踪。默认值为 0。
skip_size 开始时要跳过的字节数，默认为 0。

注解： 如果 `poll_period` 为 0，则在跟踪停止之前，OpenOCD 的 telnet 命令将不可用。必须通过复位电路板或者在 OpenOCD 的窗口中（不是 telnet 会话窗口）按下 Ctrl+C。另一种选择是设置 `trace_size` 并等待，当收集到指定数据量时，跟踪会自动停止。

命令使用示例：

1. 将 2048 个字节的跟踪数据收集到 “trace.log” 文件中，该文件将保存在 “openocd-esp32” 目录中。

   ```
   esp32 apptrace start file://trace.log 1 2048 5 0 0
   ```

   跟踪数据会被检索并以非阻塞的模式保存到文件中，如果收集满 2048 字节的数据或者在 5 秒内都没有新的数据，那么该过程就会停止。

   注解： 在将数据提供给 OpenOCD 之前，会对其进行缓冲。如果看到 “Data timeout!” 的消息，则目标可能在超时之前没有发送足够的数据给 OpenOCD 来清空缓冲区。增加超时时间或者使用函数 `esp_apptrace_flush()` 以特定间隔刷新数据都可以解决这个问题。

   ---

2. 在非阻塞模式下无限地检索跟踪数据。

   ```
   esp32 apptrace start file://trace.log 1 -1 -1 0 0
   ```

   对收集数据的大小没有限制，并且没有设置任何超时时间。可以通过在 OpenOCD 的 telnet 会话窗口中发送 `esp32 apptrace stop` 命令，或者在 OpenOCD 窗口中使用快捷键 Ctrl+C 来停止此过程。
3. 检索跟踪数据并无限期保存。

   ```
   esp32 apptrace start file://trace.log 0 -1 -1 0 0
   ```

   在跟踪停止之前，OpenOCD 的 telnet 会话窗口将不可用。要停止跟踪，请在 OpenOCD 的窗口中使用快捷键 Ctrl+C。
4. 等待目标停止，然后恢复目标的操作并开始检索数据。当收集满 2048 字节的数据后就停止：

   ```
   esp32 apptrace start file://trace.log 0 2048 -1 1 0
   ```

   想要复位后立即开始跟踪，请使用 OpenOCD 的 `reset halt` 命令。

记录日志到主机 记录日志到主机是 IDF 的一个非常实用的功能：通过应用层跟踪库将日志保存到主机端。某种程度上这也算是一种半主机（semihosting）机制，相较于调用 `ESP_LOGx` 将待打印的字符串发

送到 UART 的日志记录方式，这个功能的优势在于它减少了本地的工作量，而将大部分工作转移到了主机端。

IDF 的日志库会默认使用类 vprintf 的函数将格式化的字符串输出到专用的 UART。一般来说，它涉及到以下几个步骤：

1. 解析格式字符串以获取每个参数的类型。
2. 根据其类型，将每个参数都转换为字符串。
3. 格式字符串与转换后的参数一起发送到 UART。

虽然可以将类 vprintf 函数优化到一定程度，但是上述步骤在任何情况下都是必须要执行的，并且每个步骤都会消耗一定的时间（尤其是步骤 3）。所以经常会发生以下这种情况：向程序中添加额外的打印信息以诊断问题，却改变了应用程序的行为，使得问题无法复现。在最差的情况下，程序会无法正常工作，最终导致报错甚至挂起。

解决此类问题的可能方法是使用更高的波特率或者其他更快的接口，并将字符串格式化的工作转移到主机端。

通过应用层跟踪库的 `esp_apptrace_vprintf` 函数，可以将日志信息发送到主机，该函数不执行格式字符串和参数的完全解析，而仅仅计算传递的参数的数量，并将它们与格式字符串地址一起发送给主机。主机端会通过一个特殊的 Python 脚本来处理并打印接收到的日志数据。

局限 目前通过 JTAG 实现记录日志还存在以下几点局限：

1. 不支持使用 `ESP_EARLY_LOGx` 宏进行跟踪。
2. 不支持大小超过 4 字节的 printf 参数（例如 `double` 和 `uint64_t`）。
3. 仅支持.rodata 段中的格式字符串和参数。
4. printf 参数最多 256 个。

如何使用 为了使用跟踪模块来记录日志，用户需要执行以下步骤：

1. 在目标端，需要安装特殊的类 vprintf 函数，正如前面提到过的，这个函数是 `esp_apptrace_vprintf`，它会负责将日志数据发送给主机。示例代码参见 system/app_trace_to_host 。
2. 按照特定应用程序的跟踪 章节中第 2-5 步骤中的说明进行操作。
3. 打印接收到的日志记录，请在终端运行以下命令：`$IDF_PATH/tools/esp_app_trace/logtrace_proc.py /path/to/trace/file /path/to/program/elf/file`。

Log Trace Processor 命令选项

命令用法：

```
logtrace_proc.py [-h] [--no-errors] <trace_file> <elf_file>
```

位置参数（必要）：

`trace_file` 日志跟踪文件的路径
`elf_file` 程序 ELF 文件的路径

可选参数：

`-h, --help` 显示此帮助信息并退出
`--no-errors, -n` 不打印错误信息

基于 SEGGER SystemView 的系统行为分析 IDF 中另一个基于应用层跟踪库的实用功能是系统级跟踪，它会生成与 SEGGER SystemView 工具 相兼容的跟踪信息。SEGGER SystemView 是一种实时记录和可视化工具，用来分析应用程序运行时的行为。

注解： 目前，基于 IDF 的应用程序能够以文件的形式生成与 SystemView 格式兼容的跟踪信息，并可以使用 SystemView 工具软件打开。但是还无法使用该工具控制跟踪的过程。

如何使用 若需使用这个功能，需要在 menuconfig 中开启*CONFIG_APPTRACE_SV_ENABLE* 选项，具体路径为：*Component config* > *Application Level Tracing* > *FreeRTOS SystemView Tracing* 。在同一个菜单栏下还开启了其他几个选项：

1. *ESP32 timer to use as SystemView timestamp source* （*CONFIG_APPTRACE_SV_TS_SOURCE*）选择 SystemView 事件使用的时间戳来源。在单核模式下，使用 ESP32 内部的循环计数器生成时间戳，其最大的工作频率是 240 MHz（时间戳粒度大约为 4 ns）。在双核模式下，使用工作在 40 MHz 的外部定时器，因此时间戳粒度为 25 ns。
2. 可以单独启用或禁用的 SystemView 事件集合（`CONFIG_APPTRACE_SV_EVT_XXX`）：
   - Trace Buffer Overflow Event
   - ISR Enter Event
   - ISR Exit Event
   - ISR Exit to Scheduler Event
   - Task Start Execution Event
   - Task Stop Execution Event
   - Task Start Ready State Event
   - Task Stop Ready State Event
   - Task Create Event
   - Task Terminate Event
   - System Idle Event
   - Timer Enter Event
   - Timer Exit Event

IDF 中已经包含了所有用于生成兼容 SystemView 跟踪信息的代码，用户只需配置必要的项目选项（如上所示），然后构建、烧写映像到目标板，接着参照前面的介绍，使用 OpenOCD 收集数据。

OpenOCD SystemView 跟踪命令选项 命令用法：

```
esp32 sysview [start <options>] | [stop] | [status]
```

自命令：

`start` 开启跟踪（连续流模式）。
`stop` 停止跟踪。
`status` 获取跟踪状态。

Start 子命令语法：

```
start <outfile1> [outfile2] [poll_period [trace_size [stop_tmo]]]
```

`outfile1` 保存 PRO CPU 数据的文件路径，此参数需要具有如下格式：`file://path/to/file`。
`outfile2` 保存 APP CPU 数据的文件路径，此参数需要具有如下格式：`file://path/to/file`。
`poll_period` 跟踪数据的轮询周期（单位：毫秒）。如果该值大于 0，则命令以非阻塞的模式运行。默认为 1 毫秒。
`trace_size` 最多要收集的数据量（单位：字节）。当收到指定数量的数据后，将停止跟踪。默认值是 -1 （禁用跟踪大小停止触发器）。
`stop_tmo` 空闲超时（单位：秒）。如果指定的时间内没有数据，将停止跟踪。默认值是 -1（禁用跟踪超时停止触发器）。

注解： 如果 `poll_period` 为 0，则在跟踪停止之前，OpenOCD 的 telnet 命令行将不可用。你需要通过复位板卡或者在 OpenOCD 的窗口（不是 telnet 会话窗口）输入 Ctrl+C 命令来手动停止它。另一个办法是设置 `trace_size` 然后等到收集满指定数量的数据后自动停止跟踪。

命令使用示例：

1. 将 SystemView 跟踪数据收集到文件 “pro-cpu.SVDat” 和 “pro-cpu.SVDat” 中。这些文件会被保存在 “openocd-esp32” 目录中。

   ```
   esp32 sysview start file://pro-cpu.SVDat file://app-cpu.SVDat
   ```

   跟踪数据被检索并以非阻塞的方式保存，要停止此过程，需要在 OpenOCD 的 telnet 会话窗口输入 `esp32 apptrace stop` 命令，或者也可以在 OpenOCD 窗口中按下 Ctrl+C。

2. 检索跟踪数据并无限保存。

```
esp32 sysview start file://pro-cpu.SVDat file://app-cpu.SVDat 0 -1 -1
```

OpenOCD 的 telnet 命令行在跟踪停止前会无法使用，要停止跟踪，请在 OpenOCD 窗口按下 Ctrl+C。

数据可视化 收集到跟踪数据后，用户可以使用特殊的工具来可视化结果并分析程序的行为。遗憾的是，SystemView 不支持从多个核心进行跟踪。所以当追踪双核模式下的 ESP32 时会生成两个文件：一个用于 PRO CPU，另一个用于 APP CPU。用户可以将每个文件加载到工具中单独分析。

在工具中单独分析每个核的跟踪数据是比较棘手的，幸运的是，Eclipse 中有一款 *Impulse* 的插件可以加载多个跟踪文件，并且可以在同一个视图中检查来自两个内核的事件。此外，与免费版的 SystemView 相比，此插件没有 1,000,000 个事件的限制。

关于如何安装、配置 Impulse 并使用它可视化来自单个核心的跟踪数据，请参阅 官方教程 。

注解： IDF 使用自己的 SystemView FreeRTOS 事件 ID 映射，因此用户需要将 `$SYSVIEW_INSTALL_DIR/Description/SYSVIEW_FreeRTOS.txt` 替换成 `$IDF_PATH/docs/api-guides/SYSVIEW_FreeRTOS.txt`。在使用上述链接配置 SystemView 序列化程序时，也应该使用该 IDF 特定文件的内容。

配置 Impulse 实现双核跟踪

在安装好 Impulse 插件后，先确保它能够在单独的选项卡中成功加载每个核心的跟踪文件，然后用户可以添加特殊的 Multi Adapter 端口并将这两个文件加载到一个视图中。为此，用户需要在 Eclipse 中执行以下操作：

1. 打开 “Signal Ports” 视图，前往 Windows->Show View->Other 菜单，在 Impulse 文件夹中找到 “Signal Ports” 视图，然后双击它。
2. 在 “Signal Ports” 视图中，右键单击 “Ports” 并选择 “Add ···”，然后选择 New Multi Adapter Port。
3. 在打开的对话框中按下 “Add” 按钮，选择 “New Pipe/File”。
4. 在打开的对话框中选择 “SystemView Serializer” 并设置 PRO CPU 跟踪文件的路径，按下确定保存设置。
5. 对 APP CPU 的跟踪文件重复步骤 3 和 4。
6. 双击创建的端口，会打开此端口的视图。
7. 单击 Start/Stop Streaming 按钮，数据将会被加载。
8. 使用 “Zoom Out”，“Zoom In” 和 “Zoom Fit” 按钮来查看数据。
9. 有关设置测量光标和其他的功能，请参阅 Impulse 官方文档 。

注解： 如果您在可视化方面遇到了问题（未显示数据或者缩放操作很奇怪），您可以尝试删除当前的信号层次结构，再双击必要的文件或端口。Eclipse 会请求您创建新的信号层次结构。

4.2 应用程序的启动流程

本文将会介绍 ESP32 从上电到运行 `app_main` 函数中间所经历的步骤（即启动流程）。

宏观上，该启动流程可以分为如下 3 个步骤：

1. 一级引导程序被固化在了 ESP32 内部的 ROM 中，它会从 Flash 的 `0x1000` 偏移地址处加载二级引导程序至 RAM(IRAM & DRAM) 中。
2. 二级引导程序从 Flash 中加载分区表和主程序镜像至内存中，主程序中包含了 RAM 段和通过 Flash 高速缓存映射的只读段。
3. 主程序运行，这时第二个 CPU 和 RTOS 的调度器可以开始运行。

下面会对上述过程进行更为详细的阐述。

4.2.1 一级引导程序

SoC 复位后，PRO CPU 会立即开始运行，执行复位向量代码，而 APP CPU 仍然保持复位状态。在启动过程中，PRO CPU 会执行所有的初始化操作。APP CPU 的复位状态会在应用程序启动代码的 `call_start_cpu0` 函数中失效。复位向量代码位于 ESP32 芯片掩膜 ROM 的 `0x40000400` 地址处，该地址不能被修改。

复位向量调用的启动代码会根据 `GPIO_STRAP_REG` 寄存器的值来确定 ESP32 的工作模式，该寄存器保存着复位后 bootstrap 引脚的电平状态。根据不同的复位原因，程序会执行不同的操作：

1. 从深度睡眠模式复位：如果 `RTC_CNTL_STORE6_REG` 寄存器的值非零，并且 `RTC_CNTL_STORE7_REG` 寄存器中的 RTC 内存的 CRC 校验值有效，那么程序会使用 `RTC_CNTL_STORE6_REG` 寄存器的值作为入口地址，并立即跳转到该地址运行。如果 `RTC_CNTL_STORE6_REG` 的值为零，或者 `RTC_CNTL_STORE7_REG` 中的 CRC 校验值无效，又或者跳转到 `RTC_CNTL_STORE6_REG` 地址处运行的程序返回，那么将会执行上电复位的相关操作。**注意**：如果想在这里运行自定义的代码，可以参考深度睡眠 文档里面介绍的方法。
2. 上电复位、软件 SoC 复位、看门狗 SoC 复位：检查 `GPIO_STRAP_REG` 寄存器，判断是否 UART 或 SDIO 请求进入下载模式。如果是，则配置好 UART 或者 SDIO，然后等待下载代码。否则程序将会执行软件 CPU 复位的相关操作。
3. 软件 CPU 复位、看门狗 CPU 复位：根据 EFUSE 中的值配置 SPI Flash，然后尝试从 Flash 中加载代码，这部分的内存将会在后面一小节详细介绍。如果从 Flash 中加载代码失败，就会将 BASIC 解析器加压缩到 RAM 中启动。需要注意的是，此时 RTC 看门狗还在使能状态，如果在几百毫秒内没有任何输入事件，那么看门狗会再次复位 SoC，重复整个过程。如果解析器收到了来自 UART 的输入，程序会关闭看门狗。

应用程序的二进制镜像会从 Flash 的 `0x1000` 地址处加载。Flash 的第一个 4kB 扇区用于存储安全引导程序和应用程序镜像的签名。有关详细信息，请查看安全启动文档。

4.2.2 二级引导程序

在 ESP-IDF 中，存放在 Flash 的 `0x1000` 偏移地址处的二进制镜像就是二级引导程序。二级引导程序的源码可以在 ESP-IDF 的 components/bootloader 目录下找到。请注意，对于 ESP32 芯片来说，这并不是唯一的安排程序镜像的方式。事实上用户完全可以把一个功能齐全的应用程序烧写到 Flash 的 `0x1000` 偏移地址处运行，但这超出本文档的范围。ESP-IDF 使用二级引导程序可以增加 Flash 分区的灵活性（使用分区表），并且方便实现 Flash 加密，安全引导和空中升级（OTA）等功能。

当一级引导程序校验并加载完二级引导程序后，它会从二进制镜像的头部找到二级引导程序的入口点，并跳转过去运行。

二级引导程序从 Flash 的 `0x8000` 偏移地址处读取分区表。详细信息请参阅分区表文档分区表 。二级引导程序会寻找出厂分区和 OTA 分区，然后根据 OTA 信息分区的数据决引导哪个分区。

对于选定的分区，二级引导程序将映射到 IRAM 和 DRAM 的数据和代码段复制到它们的加载地址处。对于一些加载地址位于 DROM 和 IROM 区域的段，会通过配置 Flash MMU 为其提供正确的映射。请注意，二级引导程序会为 PRO CPU 和 APP CPU 都配置 Flash MMU，但它只使能了 PRO CPU 的 Flash MMU。这么做的原因在于二级引导程序的代码被加载到了 APP CPU 的高速缓存使用的内存区域，因此使能 APP CPU 高速缓存的任务就交给了应用程序。一旦代码加载完毕并且设置好 Flash MMU，二级引导程序会从应用程序二进制镜像文件的头部寻找入口地址，然后跳转到该地址处运行。

目前还不支持添加钩子函数到二级引导程序中以自定义应用程序分区选择的逻辑，但是可以通过别的途径实现这个需求，比如根据某个 GPIO 的不同状态来引导不同的应用程序镜像。此类自定义的功能将在未来添加到 ESP-IDF 中。目前，可以通过将 bootloader 组件复制到应用程序目录并在那里进行必要的更改来自定义引导程序。在这种情况下，ESP-IDF 的编译系统将编译应用程序目录中的组件而不是 ESP-IDF 组件目录。

4.2.3 应用程序启动阶段

ESP-IDF 应用程序的入口是 `components/esp32/cpu_start.c` 文件中的 `call_start_cpu0` 函数，该函数主要完成了两件事，一是启用堆分配器，二是使 APP CPU 跳转到其入口点——`call_start_cpu1` 函数。PRO CPU 上的代码会给 APP CPU 设置好入口地址，解除其复位状态，然后

等待 APP CPU 上运行的代码设置一个全局标志，以表明 APP CPU 已经正常启动。完成后，PRO CPU 跳转到 `start_cpu0` 函数，APP CPU 跳转到 `start_cpu1` 函数。

`start_cpu0` 和 `start_cpu1` 这两个函数都是弱类型的，这意味着如果某些特定的应用程序需要修改初始化顺序，就可以通过重写这两个函数来实现。`start_cpu0` 默认的实现方式是初始化用户在 `menuconfig` 中选择的组件，具体实现步骤可以阅读 `components/esp32/cpu_start.c` 文件中的源码。请注意，此阶段会调用应用程序中存在的 C++ 全局构造函数。一旦所有必要的组件都初始化好，就会创建 *main task* ，并启动 FreeRTOS 的调度器。

当 PRO CPU 在 `start_cpu0` 函数中进行初始化的时候，APP CPU 在 `start_cpu1` 函数中自旋，等待 PRO CPU 上的调度器启动。一旦 PRO CPU 上的调度器启动后，APP CPU 上的代码也会启动调度器。

Running the main task

主任务是指运行 `app_main` 函数的任务，主任务的堆栈大小和优先级可以在 `menuconfig` 中进行配置。应用程序可以用此任务来完成用户程序相关的初始化设置，比如启动其他的任务。应用程序还可以将主任务用于事件循环和其他通用活动。如果 `app_main` 函数返回，那么主任务将会被删除。

4.3 BluFi

4.3.1 概览

BluFi 是一款基于蓝牙通道的 Wi-Fi 网络配置功能，适用于 ESP32。它通过安全协议将 Wi-Fi 配置和证书传输到 ESP32，然后 ESP32 可基于这些信息连接到 AP 或建立 SoftAP。

BluFi 流程的关键部分包括数据的分片、加密、校验和验证。

用户可按需自定义用于对称加密、非对称加密和校验的算法。这里我们采用 DH 算法进行密钥协商、128-AES 算法用于数据加密、CRC16 算法用于校验和验证。

4.3.2 BluFi 流程

BluFi 配网功能包含配置 SoftAP 和 Station 两部分。

下面以配置 Station 为例说明配置步骤。BluFi 配网的配置 Station 包含广播、连接、服务发现、协商共享密钥、传输数据、回传连接状态等步骤。

4.3.3 ESP32 配网流程

1. ESP32 开启 GATT Server 功能，发送带有特定 *adv data* 的广播。你可以自定义该广播，该广播不属于 BluFi Profile。
2. 使用手机 APP 搜索到该特定广播，手机作为 GATT Client 连接 ESP32。你可以决定使用哪款手机 APP。
3. GATT 连接建立成功后，手机向 ESP32 发送“协商过程”数据帧（详情见*BluFi 传输格式* ）。
4. ESP32 收到“协商过程”数据帧后，会按照使用者自定义的协商过程来解析。
5. 手机与 ESP32 进行密钥协商。协商过程可使用 DH/RSA/ECC 等加密算法进行。
6. 协商结束后，手机端向 ESP32 发送“设置安全模式”控制帧。
7. ESP32 收到“设置安全模式”控制帧后，使用经过协商的共享密钥以及配置的安全策略对通信数据进行加密和解密。
8. 手机向 ESP32 发送“BluFi 传输格式”定义的 SSID、Password 等用于 Wi-Fi 连接的必要信息。
9. 手机向 ESP32 发送“Wi-Fi 连接请求”控制帧，ESP32 收到之后，识别为手机已将必要的信息传输完毕，准备连接 Wi-Fi。
10. ESP32 连接到 Wi-Fi 后，发送“Wi-Fi 连接状态报告”控制帧到手机，以报告连接状态。至此配网结束。

注解:

1. 安全模式设置可在任何时候进行，ESP32 收到安全模式的配置后，会根据安全模式指定的模式进行安全相关的操作。
2. 进行对称加密和解密时，加密和解密前后的数据长度必须一致，支持原地加密和解密。

4.3.4 配网流程图

图 2: BluFi Flow Chart

4.3.5 BluFi 传输格式

手机 APP 与 ESP32 之间的 BluFi 通信格式定义如下：

帧不分片情况下的标准格式 (8 bit)：

Description	Value
LSB - Type	1
Frame Control	1
Sequence Number	1
Data Length	1
Data	${Data Length}
MSB - CheckSum	2

如果 **Frame Control** 帧中的 **More Frag** 使能，则 **Total Content Length** 为数据帧中剩余部分的总长度，用于报告终端需要分配多少内存。

帧分片格式（8 bit）：

Description	Value	
LSB - Type	1	
FrameControl(Frag)	1	
SequenceNumber	1	
DataLength	1	
Data	Total Content Length	2
	Content	${Data Length} - 2
MSB - CheckSum	2	

通常情况下，控制帧不包含数据位，Ack 帧类型除外。

Ack 帧格式（8 bit）：

Description	Value	
LSB - Type (Ack)	1	
Frame Control	1	
SequenceNumber	1	
DataLength	1	
Data	Acked Sequence Number	2
MSB - CheckSum	2	

1. Type
   类型域，占 1 byte。分为 Type 和 Subtype（子类型域）两部分, Type 占低 2 bit，Subtype 占高 6 bit。
   - 控制帧，暂不进行加密，可校验；
   - 数据帧，可加密，可校验。

   1.1 控制帧 (0x0 b’ 00)

控制帧(二进制)	含义	解释	备注
0x0 (b’000000)	Ack	用来回复对方发的帧，Ack 帧的 Data 域使用回复对象帧的 Sequence 值。	Data 域使用 1 byte Sequence 值，与恢复对象帧的 Sequence 值相同。
0x1 (b’000001)	Set ESP32 to the security mode.	通知 ESP32 发送数据时使用的安全模式，在该过程中可设置多次，每次设置后影响后续安全模式。在不设置的情况下，ESP32 默认控制帧和数据帧均为无校验、无加密。手机到 ESP32 方向依赖于帧 Control 域。	Data 域占用 1 byte。高 4 bit 为控制帧的安全模式，低 4bit 为数据帧的安全模式。 b’0000：无校验、无加密； b’0001：有校验、无加密； b’0010：无校验、有加密； b’0011：有校验、有加密。
0x2 (b’000010)	Set the Wi-Fi opmode of ESP32.	设置 ESP32 的 Wi-Fi 模式，帧包含 opmode 信息。	data[0] 用于表示 opmode 类型，包括： 0x00: NULL; 0x01: STA; 0x02: SoftAP; 0x03: SoftAP&STA. 如果设置有包含 AP，请尽量优先设置 AP 模式的 SSID/Password/Max Conn Number 等。
0x3 (b’000011)	Connect ESP32 to the AP.	通知 ESP32，必要的信息已经发送完毕，可以连接 AP。	不包含 Data 域。
0x4 (b’000100)	Disconnect ESP32 from the AP.	通知 ESP32 断开与 AP 的连接	不包含 Data 域。
0x5 (b’000101)	Get the status of Wi-Fi.	获取 ESP32 的 Wi-Fi 模式和状态等信息。	不包含 Data 域。ESP32 收到此控制帧后，后续会通过 Wi-Fi 连接状态报告 (Wi-Fi Connection State Report) 数据帧来回复手机端当前所处的 opmode、连接状态、SSID 等信息。提供给手机端的信息由应用决定。
0x6 (b’000110)	Disconnect the STA device from the SoftAP in SoftAP mode.	处于 SoftAP 模式时，踢掉某个 STA 设备。	data[0~5] 为 STA 设备的 MAC 地址，如有多个 STA，则 [6-11] 为第二个，依次类推。
0x7 (b’000111)	Get the version.		
0x8 (b’001000)	Tell ESP32 to disconnect the BLE GATT link.	通知 ESP32 断开蓝牙连接。	ESP32 收到该指令后主动断开蓝牙连接。

1.2 数据帧 (0x1 b’01)

数据帧 (二进制)	含义	解释
0x0 (b’000000)	Negotiation data.	用来发送协商数据，传输到应用层注册的回调函数。
0x1 (b’000001)	BSSID for STA mode.	STA 将要连接的 AP 的 BSSID（用于隐藏 SSID）。
0x2 (b’000010)	SSID for STA mode.	STA 将要连接的 AP 的 SSID。
0x3 (b’000011)	Password for STA mode.	STA 将要连接的 AP 的密码。
0x4 (b’000100)	SSID for SoftAP mode.	SoftAP 模式使用的 SSID。
0x5 (b’000101)	Password for Soft-APmode.	SoftAP 模式使用的密码。
0x6 (b’000110)	Max connection number for SoftAP mode.	AP 模式的最大连接数。
0x7 (b’000111)	Authentication mode for SoftAP mode.	AP 模式的认证模式。
0x8 (b’001000)	Channel for SoftAP mode.	SoftAP 模式的通道数量。
0x9 (b’001001)	Username.	使用企业级加密时，Client 端的用户名。
0xa (b’001010)	CA certification.	进行企业级加密时使用的 CA 证书。
0xb (b’001011)	Client certification.	进行企业级加密时，Client 端的证书。 可包含或不包含私钥，由证书内容决定。
0xc (b’001100)	Server certification.	进行企业级加密时，Server 端的证书。 可包含或不包含私钥，由证书内容决定。
0xd (b’001101)	Client private key.	进行企业级加密时，Client 端的私钥。
0xe (b’001110)	Server private key.	进行企业级加密时，Server 端的私钥。
0xf (b’001111)	Wi-Fi connection state report.	通知手机 ESP32 的 Wi-Fi 状态，包括 STA 状态和 SoftAP 状态 但收到手机询问 Wi-Fi 状态时，除了回复此帧外，还可回复其他数据帧。
0x10 b’010000	Version.	
0x11 (b’010001)	Wi-Fi list.	通知手机 ESP32 周围的 Wi-Fi 热点列表。
0x12 (b’010010)	Report error.	通知手机 BluFi 过程出现异常错误。

数据帧 (二进制)	含义	解释
0x13 (b’ 010011)	Custom data.	用户发送或者接收自定义数据。
0x14 (b’ 010100)	Set the max Wi-Fi reconnecting time.	
0x15 (b’ 010101)	Set the Wi-Fi connection end reason.	
0x16 (b’ 010110)	Set the RSSI at Wi-Fi connection end.	

2. Frame Control
   帧控制域，占 1 byte，每个 bit 表示不同含义。

位	含义
0x01	表示帧是否加密。
	1 表示加密，0 表示未加密。
	加密部分帧括完整的 DATA 域加密之前的明文（不帧含末尾的校验）。
	控制帧暂不加密，故控制帧此位为 0。
0x02	表示帧 Data 域结尾是否帧含校验（例如 SHA1,MD5,CRC 等）需要校验的数据域包括 sequcne + data length + 明文 data。
	控制帧和数据帧都可以包含校验位或不包含。
0x04	表示数据方向。
	0 表示手机发向 ESP32;
	1 表示 ESP32 发向手机。
0x08	表示是否要求对方回复 ack。
	0 表示不要求;
	1 表示要求回复 ack。
0x10	表示是否有后续的数据分片。
	0 表示此帧没有后续数据分片;
	1 表示还有后续数据分片，用来传输较长的数据。
	如果是 Frag 帧，则告知当前 content 部分 + 后续 content 部分的总长度，位于 Data 域的前 2 字节 (即最大支持 64K 的 content 数据)。
0x10~0x80 保留	

3. Sequence Control
   序列控制域。帧发送时，无论帧的类型是什么，序列 (Sequence) 都会自动加 1，用来防止重放攻击 (Replay Attack)。每次重现连接后，序列清零。
4. Length
   Data 域的长度，不包含 CheckSum。
5. Data
   不同的 Type 或 Subtype，Data 域的含义均不同。请参考上方表格。
6. CheckSum
   此域为 2 byte 的校验，用来校验『序列 + 数据长度 + 明文数据』。

4.3.6 ESP32 端的安全实现

1. 保证数据安全
   为了保证 Wi-Fi SSID 和密码的传输过程是安全的，需要使用对称加密算法（例如 AES、DES 等）对报文进行加密。在使用对称加密算法之前，需要使用非对称加密算法（DH、RSA、ECC 等）协商出（或生成出）一个共享密钥。
2. 保证数据完整性
   保证数据完整性，需要加入校验算法（例如 SHA1、MD5、CRC 等）。

3. 身份安全（签名）
   某些算法如 RSA 可以保证身份安全。有些算法如 DH，本身不能保证身份安全，需要添加其他算法来签名。
4. 防止重放攻击 (Replay Attack)
   加入帧发送序列（Sequence），并且序列参与数据校验。
   在 ESP32 端的代码中，你可以决定和开发密钥协商等安全处理的流程参考上述流程图）。手机应用向 ESP32 发送协商数据，将传送给应用层处理。如果应用层不处理，可使用 BluFi 提供的 DH 加密算法来磋商密钥。应用层需向 BluFi 注册以下几个与安全相关的函数：

```
typedef void (*esp_blufi_negotiate_data_handler_t)(uint8_t *data, int len, uint8_t␣
↪**output_data, int *output_len, bool *need_free);
```

该函数用来接收协商期间的正常数据 (normal data)，处理完成后，需要将待发送的数据使用 output_data 和 output_len 传出。

BluFi 会在调用完 negotiate_data_handler 后，发送 negotiate_data_handler 传出的 output_data。

这里的两个『*』，因为需要发出去的数据长度未知，所以需要函数自行分配 (malloc) 或者指向全局变量，通过 need_free 通知是否需要释放内存。

```
typedef int (* esp_blufi_encrypt_func_t)(uint8_t iv8, uint8_t *crypt_data, int␣
↪crypt_len);
```

加密和解密的数据长度必须一致。其中 iv8 为帧的 8 bit 序列 (sequence)，可作为 iv 的某 8 bit 来使用。

```
typedef int (* esp_blufi_decrypt_func_t)(uint8_t iv8, uint8_t *crypt_data, int␣
↪crypt_len);
```

加密和解密的数据长度必须一致。其中 iv8 为帧的 8 bit 序列 (sequence)，可作为 iv 的某 8 bit 来使用。

```
typedef uint16_t (*esp_blufi_checksum_func_t)(uint8_t iv8, uint8_t *data, int len);
```

该函数用来计算 CheckSum，返回值为 CheckSum 的值。BluFi 会使用该函数返回值与包末尾的 CheckSum 做比较。

4.3.7 GATT 相关说明

UUID

BluFi Service UUID：0xFFFF，16 bit

BluFi （手机 -> ESP32）特性：0xFF01，主要权限：可写

BluFi （ESP32 -> 手机）特性：0xFF02，主要权限：可读可通知

4.4 引导加载程序（Bootloader）

引导加载程序（Bootloader）主要执行以下任务：

1. 内部模块的最小化初始配置；
2. 根据分区表和 ota_data（如果存在）选择需要引导的应用程序（app）分区；
3. 将此应用程序映像加载到 RAM（IRAM 和 DRAM）中，最后把控制权转交给应用程序。

引导加载程序位于 Flash 的 *0x1000* 偏移地址处。

4.4.1 引导加载程序兼容性

建议使用最新发布的*ESP-IDF 版本*。OTA（空中升级）更新可以在现场烧录新的应用程序，但不能烧录一个新的引导加载程序。因此，引导加载程序支持引导从 ESP-IDF 新版本中构建的应用程序。

但不支持引导从 ESP-IDF 旧版本中构建的程序。如果现有产品可能需要将应用程序降级到旧版本，那么在手动更新 ESP-IDF 时，请继续使用旧版本 ESP-IDF 引导加载程序的二进制文件。

4.4.2 恢复出厂设置

用户可以编写一个基本的工作固件，然后将其加载到工厂分区（factory）中。

接下来，通过 OTA（空中升级）更新固件，更新后的固件会被保存到某个 OTA app 分区中，OTA 数据分区也会做相应更新以指示从该分区引导应用程序。

如果你希望回滚到出厂固件并清除设置，则需要设置*CONFIG_BOOTLOADER_FACTORY_RESET*。出厂重置机制允许将设备重置为出厂模式：

- 清除一个或多个数据分区。
- 从工厂分区启动。

CONFIG_BOOTLOADER_DATA_FACTORY_RESET - 允许用户选择在恢复出厂设置时需要擦除的数据分区。可以通过逗号来分隔多个分区的名字，并适当增加空格以便阅读（例如 “nvs, phy_init, nvs_custom, ···”）。请确保此处指定的名称和分区表中的名称相同，且不含有 “app” 类型的分区。

CONFIG_BOOTLOADER_OTA_DATA_ERASE - 恢复出厂模式后，设备会从工厂分区启动，OTA 数据分区会被清除。

CONFIG_BOOTLOADER_NUM_PIN_FACTORY_RESET- 设置用于触发出厂重置的 GPIO 编号，必须在芯片复位时将此 GPIO 拉低才能触发出厂重置事件。

CONFIG_BOOTLOADER_HOLD_TIME_GPIO- 设置进入重置或测试模式所需要的保持时间（默认为 5 秒）。设备复位后，GPIO 必须在这段时间内持续保持低电平，然后才会执行出厂重置或引导测试分区。

示例分区表如下：

```
# Name,   Type, SubType, Offset,  Size, Flags
# 注意，如果你增大了引导加载程序的大小，请确保更新偏移量，避免和其它分区发生重叠
nvs,      data, nvs,     0x9000,  0x4000
otadata,  data, ota,     0xd000,  0x2000
phy_init, data, phy,     0xf000,  0x1000
factory,  0,    0,       0x10000, 1M
test,     0,    test,    ,        512K
ota_0,    0,    ota_0,   ,        512K
ota_1,    0,    ota_1,   ,        512K
```

4.4.3 从测试应用程序分区启动

用户可以编写特殊固件用于生产环境中测试，然后在需要的时候运行。此时需要在分区表中专门申请一块分区用于保存该测试固件（详情请参阅分区表）。如果想要触发测试固件，还需要设置*CONFIG_BOOTLOADER_APP_TEST*。

CONFIG_BOOTLOADER_NUM_PIN_APP_TEST - 设置引导测试分区的 GPIO 管脚编号，该 GPIO 会被配置为输入模式，并且会使能内部上拉电阻。若想触发测试固件，该 GPIO 必须在芯片复位时拉低。设备重启时如果该 GPIO 没有被激活（即处于高电平状态），那么会加载常规配置的应用程序（可能位于工厂分区或者 OTA 分区）。

CONFIG_BOOTLOADER_HOLD_TIME_GPIO - 设置进入重置或测试模式所需要的保持时间（默认为 5 秒）。设备复位后，GPIO 必须在这段时间内持续保持低电平，然后才会执行出厂重置或引导测试分区。

4.4.4 从深度睡眠中快速启动

引导加载程序有*CONFIG_BOOTLOADER_SKIP_VALIDATE_IN_DEEP_SLEEP* 选项，可以减少唤醒时间（有利于降低消耗）。当*CONFIG_SECURE_BOOT* 选项禁用时，该选项可用。由于无需固件校验，唤醒时间减少。在第一次启动时，引导加载程序将启动的应用程序的地址存储在 RTC FAST 存储器中。而在唤醒过程中，这个地址用于启动而无需任何检查，从而实现了快速加载。

4.4.5 自定义引导程序

用户可以重写当前的引导加载程序，具体做法是，复制 */esp-idf/components/bootloader* 文件夹到项目组件目录中，然后编辑 `/your_project/components/bootloader/subproject/main/bootloader_start.c` 文件。

在引导加载程序的代码中，用户不能使用其他组件提供的驱动和函数，如果确实需要，请将该功能的实现部分放在项目的 bootloader 目录中（注意，这会增加引导程序的大小）。

如果引导程序过大，则可能与内存中的分区表重叠，分区表默认烧录在偏移量 0x8000 处。增加*分区表偏移量值*，将分区表放在 flash 中靠后的区域，这样可以增加引导程序的可用空间。

注解： 初次将引导程序复制到现有项目中时，由于路径发生了意外变化，项目可能无法构建。对于这种情况，请运行 `idf.py fullclean`（或删除项目构建目录），然后重新构建。

4.5 构建系统（CMake 版）

本文档主要介绍 ESP-IDF 构建系统的实现原理以及组件等相关概念。如需您想了解如何组织和构建新的 ESP-IDF 项目或组件，请阅读本文档。

注解： 本文档将介绍基于 CMake 的构建系统，它是 ESP-IDF V4.0 及以上版本的默认系统。此外 ESP-IDF 还支持*基于 GNU Make 的构建系统*，基于 GNU Make 的构建系统是 ESP-IDF V4.0 以下版本的默认系统。

4.5.1 概述

一个 ESP-IDF 项目可以看作是多个不同组件的集合，例如一个显示当前湿度的网页服务器会包含以下组件：

- ESP-IDF 基础库，包括 libc、ROM bindings 等
- Wi-Fi 驱动
- TCP/IP 协议栈
- FreeRTOS 操作系统
- 网页服务器
- 湿度传感器的驱动
- 负责将上述组件整合到一起的主程序

ESP-IDF 可以显式地指定和配置每个组件。在构建项目的时候，构建系统会前往 ESP-IDF 目录、项目目录和用户自定义组件目录（可选）中查找所有组件，允许用户通过文本菜单系统配置 ESP-IDF 项目中用到的每个组件。在所有组件配置结束后，构建系统开始编译整个项目。

概念

- 项目特指一个目录，其中包含了构建可执行应用程序所需的全部文件和配置，以及其他支持型文件，例如分区表、数据/文件系统分区和引导程序。
- 项目配置保存在项目根目录下名为 `sdkconfig` 的文件中，可以通过 `idf.py menuconfig` 进行修改，且一个项目只能包含一个项目配置。
- 应用程序是由 ESP-IDF 构建得到的可执行文件。一个项目通常会构建两个应用程序：项目应用程序（可执行的主文件，即用户自定义的固件）和引导程序（启动并初始化项目应用程序）。
- 组件是模块化且独立的代码，会被编译成静态库（.a 文件）并链接到应用程序。部分组件由 ESP-IDF 官方提供，其他组件则来源于其它开源项目。
- 目标特指运行构建后应用程序的硬件设备。ESP-IDF 当前仅支持 `esp32` 和 `esp32s2` 这两个硬件目标。

请注意，以下内容并不属于项目的组成部分：

- ESP-IDF 并不是项目的一部分，它独立于项目，通过 IDF_PATH 环境变量（保存 esp-idf 目录的路径）链接到项目，从而将 IDF 框架与项目分离。
- 交叉编译工具链并不是项目的组成部分，它应该被安装在系统 PATH 环境变量中。

4.5.2 使用构建系统

idf.py

idf.py 命令行工具提供了一个前端，可以帮助您轻松管理项目的构建过程，它管理了以下工具：

- CMake，配置待构建的项目
- 命令行构建工具（Ninja 或 *GNU Make*）
- esptool.py，烧录目标硬件设备

入门指南 简要介绍了如何设置 idf.py 用于配置、构建并烧录项目。

idf.py 应运行在 ESP-IDF 的 项目目录下，即包含 CMakeLists.txt 文件的目录。仅包含 Makefile 的老式项目并不支持 idf.py。

运行 idf.py --help 查看完整的命令列表。下面总结了最常用的命令：

- idf.py set-target <target> 会设置构建项目的目标（芯片）。请参考选择目标芯片。
- idf.py menuconfig 会运行 menuconfig 工具来配置项目。
- idf.py build 会构建在当前目录下找到的项目，它包括以下步骤：
  - 根据需要创建 build 构建目录，它用于保存构建过程的输出文件，可以使用 -B 选项修改默认的构建目录。
  - 根据需要运行 CMake 来配置项目，为主构建工具生成构建文件。
  - 运行主构建工具（Ninja 或 *GNU Make*）。默认情况下，构建工具会被自动检测，可以使用 -G 选项显式地指定构建工具。

  构建过程是增量式的，如果自上次构建以来源文件或项目配置没有发生改变，则不会执行任何操作。
- idf.py clean 会把构建输出的文件从构建目录中删除，从而清理整个项目。下次构建时会强制“重新完整构建”这个项目。清理时，不会删除 CMake 配置输出及其他文件。
- idf.py fullclean 会将整个 build 目录下的内容全部删除，包括所有 CMake 的配置输出文件。下次构建项目时，CMake 会从头开始配置项目。请注意，该命令会递归删除构建目录下的 所有文件，请谨慎使用。项目配置文件不会被删除。
- idf.py flash 会在必要时自动构建项目，并将生成的二进制程序烧录进目标 ESP32 设备中。-p 和 -b 选项可分别设置串口的设备名和烧录时的波特率。
- idf.py monitor 用于显示目标 ESP32 设备的串口输出。-p 选项可用于设置主机端串口的设备名，按下 Ctrl-] 可退出监视器。更多有关监视器的详情，请参阅*IDF 监视器*。

多个 idf.py 命令可合并成一个，例如，idf.py -p COM4 clean flash monitor 会依次清理源码树，构建项目，烧录进目标 ESP32 设备，最后运行串口监视器。

对于 idf.py 不知道的指令，idf.py 会尝试将其作为构建系统的目标来执行。

idf.py 命令支持 bash, zsh 以及 fish shell 的 自动补全。

要实现实现 shell 自动补全，请先确保您安装了 Python 3.5 以及 click 7.1 及以上版本（请参考这里）。

使用 export 命令来启用 idf.py 的自动补全功能（请参考这里）。按 TAB 键可实现自动补全。输入“idf.py -”后按 TAB 键可自动补全选项。

未来我们也会支持 PowerShell 的自动补全功能。

注解： 环境变量 ESPPORT 和 ESPBAUD 可分别用来设置 -p 和 -b 选项的默认值。在命令行中，重新为这两个选项赋值，会覆盖其默认值。

高级命令

- `idf.py app`，`idf.py bootloader`，`idf.py partition_table` 仅可用于从适用的项目中构建应用程序、引导程序或分区表。
- `idf.py app-flash` 等匹配命令，仅将项目的特定部分烧录至 ESP32。
- `idf.py -p PORT erase_flash` 会使用 esptool.py 擦除 ESP32 的整个 Flash。
- `idf.py size` 会打印应用程序相关的大小信息，`idf.py size-components` 和 `idf.py size-files` 这两个命令相似，分别用于打印每个组件或源文件的详细信息。如果您在运行 CMake（或 `idf.py`）时定义了变量 `-DOUTPUT_JSON=1`，那么输出的格式会变成 JSON 而不是可读文本。
- `idf.py reconfigure` 命令会重新运行 CMake （即便无需重新运行）。正常使用时，并不需要运行此命令，但当源码树中添加/删除文件后或更改 CMake cache 变量时，此命令会非常有用，例如，`idf.py -DNAME='VALUE' reconfigure` 会将 CMake cache 中的变量 `NAME` 的值设置为 `VALUE`。
- `idf.py python-clean` 会从 IDF 目录中删除生成的 Python 字节码，Python 字节码可能会在切换 IDF 和 Python 版本时引发问题，因此建议在切换 Python 后运行该命令。

同时调用多个 `idf.py` 命令时，命令的输入顺序并不重要，它们会按照正确的顺序依次执行，并保证每一条命令都生效（即先构建后烧录，先擦除后烧录等）。

idf.py 选项 运行 `idf.py --help` 命令列出所有根级选项。运行 `idf.py <command> --help` 命令列出针对某一子命令的选项，如 `idf.py monitor --help`。下列是一些常用选项：

- `-C <dir>` 可用来从默认的当前工作目录覆盖项目目录。
- `-B <dir>` 可用来从项目目录默认的 `build` 子目录覆盖构建目录。
- `--ccache` 可用来在编译源文件时启用 CCache，安装了 CCache 工具后可极大缩短编译时间。

请注意，一些旧版本的 CCache 在某些平台上可能会出现 bug，因此如果文件没有按预期重新构建，请尝试禁用 CCache 后再次构建。通过设置环境变量 `IDF_CCACHE_ENABLE` 为非零值，可以默认启用 CCache。

- `-v` 可以让 `idf.py` 和编译系统产生详细的编译输出，对于调试编译问题会非常有用。
- `--cmake-warn-uninitialized`` （或 ``-w`）会让 CMake 在项目目录内打印未初始化的变量警告（不包括在项目目录外的目录），这一选项只能控制 CMake 内部的 CMake 变量警告，不包括其它类型的编译警告。可以通过设置环境变量 `IDF_CMAKE_WARN_UNINITIALIZED` 为非零值，从而永久设置该选项。

开始新项目

运行 `idf.py create-project` 命令可以开始创建您的新项目，运行 `idf.py create-project --help` 命令获取更多相关信息。

例如：

```
idf.py create-project --path my_projects my_new_project
```

以上命令会直接在 my_projects 目录下创建一个名为 my_new_project 的新项目。

直接使用 CMake

为了方便，*idf.py* 已经封装了 CMake 命令，但是您愿意，也可以直接调用 CMake。

当 `idf.py` 在执行某些操作时，它会打印出其运行的每条命令以便参考。例如运行 `idf.py build` 命令与在 bash shell（或者 Windows Command Prompt）中运行以下命令是相同的：

```
mkdir -p build
cd build
cmake .. -G Ninja    # 或者 'Unix Makefiles'
ninja
```

在上面的命令列表中，`cmake` 命令对项目进行配置，并生成用于最终构建工具的构建文件。在这个例子中，最终构建工具是 Ninja: 运行 `ninja` 来构建项目。

没有必要多次运行 cmake。第一次构建后，往后每次只需运行 ninja 即可。如果项目需要重新配置，ninja 会自动重新调用 cmake。

若在 CMake 中使用 ninja 或 make，则多数 idf.py 子命令也会有其对应的目标，例如在构建目录下运行 make menuconfig 或 ninja menuconfig 与运行 idf.py menuconfig 是相同的。

注解： 如果您已经熟悉了 CMake，那么可能会发现 ESP-IDF 的 CMake 构建系统不同寻常，为了减少样板文件，该系统封装了 CMake 的许多功能。请参考*编写纯 CMake 组件* 以编写更多“CMake 风格”的组件。

使用 Ninja/Make 来烧录 您可以直接使用 ninja 或 make 运行如下命令来构建项目并烧录:

```
ninja flash
```

或:

```
make app-flash
```

可用的目标还包括：flash、app-flash （仅用于 app）、bootloader-flash （仅用于 bootloader）。

以这种方式烧录时，可以通过设置 ESPPORT 和 ESPBAUD 环境变量来指定串口设备和波特率。您可以在操作系统或 IDE 项目中设置该环境变量，或者直接在命令行中进行设置:

```
ESPPORT=/dev/ttyUSB0 ninja flash
```

注解： 在命令的开头为环境变量赋值属于 Bash shell 的语法，可在 Linux 、macOS 和 Windows 的类 Bash shell 中运行，但在 Windows Command Prompt 中无法运行。

或:

```
make -j3 app-flash ESPPORT=COM4 ESPBAUD=2000000
```

注解： 在命令末尾为变量赋值属于 make 的语法，适用于所有平台的 make。

在 IDE 中使用 CMake

您还可以使用集成了 CMake 的 IDE，仅需将项目 CMakeLists.txt 文件的路径告诉 IDE 即可。集成 CMake 的 IDE 通常会有自己的构建工具（CMake 称之为“生成器”），它是组成 IDE 的一部分，用来构建源文件。

向 IDE 中添加除 build 目标以外的自定义目标（如添加“Flash”目标到 IDE）时，建议调用 idf.py 命令来执行这些“特殊”的操作。

有关将 ESP-IDF 同 CMake 集成到 IDE 中的详细信息，请参阅*构建系统的元数据*。

设置 Python 解释器

ESP-IDF 适用于所有支持的 Python 版本。即使您系统中默认的 python 解释器仍是 Python 2.7，ESP-IDF 也可以使用，但建议您升级至 Python 3。

idf.py 和其他的 Python 脚本会使用默认的 Python 解释器运行，如 python。您可以通过 python3 $IDF_PATH/tools/idf.py ... 命令切换到别的 Python 解释器，或者您可以通过设置 shell 别名或其他脚本来简化该命令。

如果直接使用 CMake，运行 cmake -D PYTHON=python3 ...，CMake 会使用传入的值覆盖默认的 Python 解释器。

如果使用集成 CMake 的 IDE，可以在 IDE 的图形用户界面中给名为 PYTHON 的 CMake cache 变量设置新的值来覆盖默认的 Python 解释器。

如果想在命令行中更优雅地管理 Python 的各个版本，请查看 pyenv 或 virtualenv 工具，它们会帮助您更改默认的 python 版本。

潜在问题 使用 idf.py 可能会出现如下 ImportError 错误：

```
Traceback (most recent call last):
  File "/Users/user_name/e/esp-idf/tools/kconfig_new/confgen.py", line 27, in
↪<module>
    import kconfiglib
ImportError: bad magic number in 'kconfiglib': b'\x03\xf3\r\n'
```

该错误通常是由不同 Python 版本生成的 .pyc 文件引起的，可以通过运行以下命令解决该问题：

```
idf.py python-clean
```

4.5.3 示例项目

示例项目的目录树结构可能如下所示：

```
- myProject/
             - CMakeLists.txt
             - sdkconfig
             - components/ - component1/ - CMakeLists.txt
                                         - Kconfig
                                         - src1.c
                           - component2/ - CMakeLists.txt
                                         - Kconfig
                                         - src1.c
                                         - include/ - component2.h
             - main/       - CMakeLists.txt
                           - src1.c
                           - src2.c

             - build/
```

该示例项目“myProject”包含以下组成部分：

- 顶层项目 CMakeLists.txt 文件，这是 CMake 用于学习如何构建项目的主要文件，可以在这个文件中设置项目全局的 CMake 变量。顶层项目 CMakeLists.txt 文件会导入 /tools/cmake/project.cmake 文件，由它负责实现构建系统的其余部分。该文件最后会设置项目的名称，并定义该项目。
- “sdkconfig”项目配置文件，执行 idf.py menuconfig 时会创建或更新此文件，文件中保存了项目中所有组件（包括 ESP-IDF 本身）的配置信息。sdkconfig 文件可能会也可能不会被添加到项目的源码管理系统中。
- 可选的“components”目录中包含了项目的部分自定义组件，并不是每个项目都需要这种自定义组件，但它有助于构建可复用的代码或者导入第三方（不属于 ESP-IDF）的组件。或者，您也可以在顶层 CMakeLists.txt 中设置 EXTRA_COMPONENT_DIRS 变量以查找其他指定位置处的组件。有关详细信息，请参阅*重命名 main 组件*。如果项目中源文件较多，建议将其归于组件中，而不是全部放在“main”中。
- “main”目录是一个特殊的组件，它包含项目本身的源代码。”main”是默认名称，CMake 变量 COMPONENT_DIRS 默认包含此组件，但您可以修改此变量。
- “build”目录是存放构建输出的地方，如果没有此目录，idf.py 会自动创建。CMake 会配置项目，并在此目录下生成临时的构建文件。随后，在主构建进程的运行期间，该目录还会保存临时目标文件、库文件以及最终输出的二进制文件。此目录通常不会添加到项目的源码管理系统中，也不会随项目源码一同发布。

每个组件目录都包含一个 CMakeLists.txt 文件，里面会定义一些变量以控制该组件的构建过程，以及其与整个项目的集成。更多详细信息请参阅*组件 CMakeLists 文件*。

每个组件还可以包含一个 Kconfig 文件，它用于定义 menuconfig 时展示的组件配置 选项。某些组件可能还会包含 Kconfig.projbuild 和 project_include.cmake 特殊文件，它们用于覆盖项目的部分设置。

4.5.4 项目 CMakeLists 文件

每个项目都有一个顶层 CMakeLists.txt 文件，包含整个项目的构建设置。默认情况下，项目 CMakeLists 文件会非常小。

最小 CMakeLists 文件示例

最小项目：

```
cmake_minimum_required(VERSION 3.5)
include($ENV{IDF_PATH}/tools/cmake/project.cmake)
project(myProject)
```

必要部分

每个项目都要按照上面显示的顺序添加上述三行代码：

- cmake_minimum_required(VERSION 3.5) 必须放在 CMakeLists.txt 文件的第一行，它会告诉 CMake 构建该项目所需要的最小版本号。ESP-IDF 支持 CMake 3.5 或更高的版本。
- include($ENV{IDF_PATH}/tools/cmake/project.cmake) 会导入 CMake 的其余功能来完成配置项目、检索组件等任务。
- project(myProject) 会创建项目本身，并指定项目名称。该名称会作为最终输出的二进制文件的名字，即 myProject.elf 和 myProject.bin。每个 CMakeLists 文件只能定义一个项目。

可选的项目变量

以下这些变量都有默认值，用户可以覆盖这些变量值以自定义构建行为。更多实现细节，请参阅 /tools/cmake/project.cmake 文件。

- COMPONENT_DIRS：组件的搜索目录，默认为 IDF_PATH/components、PROJECT_DIR/components、和 EXTRA_COMPONENT_DIRS。如果您不想在这些位置搜索组件，请覆盖此变量。
- EXTRA_COMPONENT_DIRS：用于搜索组件的其它可选目录列表。路径可以是相对于项目目录的相对路径，也可以是绝对路径。
- COMPONENTS：要构建进项目中的组件名称列表，默认为 COMPONENT_DIRS 目录下检索到的所有组件。使用此变量可以“精简”项目以缩短构建时间。请注意，如果一个组件通过 COMPONENT_REQUIRES 指定了它依赖的另一个组件，则会自动将其添加到 COMPONENTS 中，所以 COMPONENTS 列表可能会非常短。

以上变量中的路径可以是绝对路径，或者是相对于项目目录的相对路径。

请使用 cmake 中的 set 命令 来设置这些变量，如 set(VARIABLE "VALUE")。请注意，set() 命令需放在 include(...) 之前，cmake_minimum(...) 之后。

重命名 main 组件

构建系统会对 main 组件进行特殊处理。假如 main 组件位于预期的位置（即 *${PROJECT_PATH}/main*），那么它会被自动添加到构建系统中。其他组件也会作为其依赖项被添加到构建系统中，这使用户免于处理依赖关系，并提供即时可用的构建功能。重命名 main 组件会减轻上述这些幕后工作量，但要求用户指定重命名后的组件位置，并手动为其添加依赖项。重命名 main 组件的步骤如下：

1. 重命名 main 目录。
2. 在项目 CMakeLists.txt 文件中设置 EXTRA_COMPONENT_DIRS，并添加重命名后的 main 目录。

3. 在组件的 CMakeLists.txt 文件中设置 COMPONENT_REQUIRES 或 COMPONENT_PRIV_REQUIRES 以指定依赖项。

4.5.5 组件 CMakeLists 文件

每个项目都包含一个或多个组件，这些组件可以是 ESP-IDF 的一部分，可以是项目自身组件目录的一部分，也可以从自定义组件目录添加（见上文）。

组件是 COMPONENT_DIRS 列表中包含 CMakeLists.txt 文件的任何目录。

搜索组件

搜索 COMPONENT_DIRS 中的目录列表以查找项目的组件，此列表中的目录可以是组件自身（即包含 *CMakeLists.txt* 文件的目录），也可以是子目录为组件的顶级目录。

当 CMake 运行项目配置时，它会记录本次构建包含的组件列表，它可用于调试某些组件的添加/排除。

同名组件

ESP-IDF 在搜索所有待构建的组件时，会按照 COMPONENT_DIRS 指定的顺序依次进行，这意味着在默认情况下，首先搜索 ESP-IDF 内部组件，然后是项目组件，最后是 EXTRA_COMPONENT_DIRS 中的组件。如果这些目录中的两个或者多个包含具有相同名字的组件，则使用搜索到的最后一个位置的组件。这就允许将组件复制到项目目录中再修改以覆盖 ESP-IDF 组件，如果使用这种方式，ESP-IDF 目录本身可以保持不变。

注解： 如果在现有项目中通过将组件移动到一个新位置来覆盖它，项目不会自动看到新组件的路径。请运行 idf.py reconfigure 命令后（或删除项目构建文件夹）再重新构建。

最小组件 CMakeLists 文件

最小组件 CMakeLists.txt 文件通过使用 idf_component_register 将组件添加到构建系统中。

> **idf_component_register(SRCS “foo.c” “bar.c” INCLUDE_DIRS “include” REQUIRES** mbedtls)

- SRCS 是源文件列表（*.c、*.cpp、*.cc、*.S），里面所有的源文件都将会编译进组件库中。
- INCLUDE_DIRS 是目录列表，里面的路径会被添加到所有需要该组件的组件（包括 main 组件）全局 include 搜索路径中。
- REQUIRES 实际上并不是必需的，但通常需要它来声明该组件需要使用哪些其它组件，请参考组件依赖.

上述命令会构建生成与组件同名的库，并最终被链接到应用程序中。

上述目录通常设置为相对于 CMakeLists.txt 文件的相对路径，当然也可以设置为绝对路径。

还有其它参数可以传递给 idf_component_register，具体可参考*here*。

有关更完整的 CMakeLists.txt 示例，请参阅组件依赖示例 和组件 *CMakeLists* 示例。

创建新组件

使用 idf.py create-component 命令创建新组件。新组件将包含构建组件所需的一组文件。您可以将组件的头文件纳入到您的项目中，并使用其功能。请运行 idf.py create-component --help 命令获取更多信息。

示例:

```
idf.py -C components create-component my_component
```

该示例将在当前工作目录下的子目录 components 中创建一个新的组件。更多关于组件的信息，请参考上文。

预设的组件变量

以下专用于组件的变量可以在组件 CMakeLists 中使用，但不建议修改：

- COMPONENT_DIR：组件目录，即包含 CMakeLists.txt 文件的绝对路径，它与 CMAKE_CURRENT_SOURCE_DIR 变量一样，路径中不能包含空格。
- COMPONENT_NAME：组件名，与组件目录名相同。
- COMPONENT_ALIAS：库别名，由构建系统在内部为组件创建。
- COMPONENT_LIB：库名，由构建系统在内部为组件创建。

以下变量在项目级别中被设置，但可在组件 CMakeLists 中使用：

- CONFIG_*：项目配置中的每个值在 cmake 中都对应一个以 CONFIG_ 开头的变量。更多详细信息请参阅*Kconfig*。
- ESP_PLATFORM：ESP-IDF 构建系统处理 CMake 文件时，其值设为 1。

构建/项目变量

以下是可作为构建属性的构建/项目变量，可通过组件 CMakeLists.txt 中的 idf_build_get_property 查询其变量值。

- PROJECT_NAME：项目名，在项目 CMakeLists.txt 文件中设置。
- PROJECT_DIR：项目目录（包含项目 CMakeLists 文件）的绝对路径，与 CMAKE_SOURCE_DIR 变量相同。
- COMPONENTS：此次构建中包含的所有组件的名称，具体格式为用分号隔开的 CMake 列表。
- IDF_VER：ESP-IDF 的 git 版本号，由 git describe 命令生成。
- IDF_VERSION_MAJOR, IDF_VERSION_MINOR, IDF_VERSION_PATCH: ESP-IDF 的组件版本，可用于条件表达式。请注意这些信息的精确度不如 IDF_VER 变量，版本号 v4.0-dev-*，v4.0-beta1，v4.0-rc1 和 v4.0 对应的 IDF_VERSION_* 变量值是相同的，但是 IDF_VER 的值是不同的。
- IDF_TARGET：项目的硬件目标名称。
- PROJECT_VER：项目版本号。
  - 如果设置*CONFIG_APP_PROJECT_VER_FROM_CONFIG* 选项，将会使用*CONFIG_APP_PROJECT_VER* 的值。
  - 或者，如果在项目 CMakeLists.txt 文件中设置了 PROJECT_VER 变量，则该变量值可以使用。
  - 或者，如果 PROJECT_DIR/version.txt 文件存在，其内容会用作 PROJECT_VER 的值。
  - 或者，如果项目位于某个 Git 仓库中，则使用 git describe 命令的输出作为 PROJECT_VER 的值。
  - 否则，PROJECT_VER 的值为 1。

其它与构建属性有关的信息请参考这里。

组件编译控制

在编译特定组件的源文件时，可以使用 target_compile_options 命令来传递编译器选项：

```
target_compile_options(${COMPONENT_LIB} PRIVATE -Wno-unused-variable)
```

如果给单个源文件指定编译器标志，可以使用 CMake 的 set_source_files_properties 命令：

```
set_source_files_properties(mysrc.c
    PROPERTIES COMPILE_FLAGS
```

(下页继续)

(续上页)

```
    -Wno-unused-variable
)
```

如果上游代码在编译的时候发出了警告，那这么做可能会很有效。

请注意，上述两条命令只能在组件 CMakeLists 文件的 `idf_component_register` 命令之后调用。

4.5.6 组件配置

每个组件都可以包含一个 `Kconfig` 文件，和 `CMakeLists.txt` 放在同一目录下。`Kconfig` 文件中包含要添加到该组件配置菜单中的一些配置设置信息。

运行 menuconfig 时，可以在 `Component Settings` 菜单栏下找到这些设置。

创建一个组件的 Kconfig 文件，最简单的方法就是使用 ESP-IDF 中现有的 Kconfig 文件作为模板，在这基础上进行修改。

有关示例请参阅*添加条件配置*。

4.5.7 预处理器定义

ESP-IDF 构建系统会在命令行中添加以下 C 预处理器定义：

- `ESP_PLATFORM`：可以用来检测在 ESP-IDF 内发生了构建行为。
- `IDF_VER`：定义 git 版本字符串，例如：`v2.0` 用于标记已发布的版本，`v1.0-275-g0efaa4f` 则用于标记任意某次的提交记录。

4.5.8 组件依赖

编译各个组件时，ESP-IDF 系统会递归评估其依赖项。这意味着每个组件都需要声明它所依赖的组件，即“requires”。

编写组件

```
idf_component_register(...
                       REQUIRES mbedtls
                       PRIV_REQUIRES console spiffs)
```

- `REQUIRES` 需要包含所有在当前组件的 *公共头文件里 #include* 的头文件所在的组件。
- `PRIV_REQUIRES` 需要包含被当前组件的源文件 *#include* 的头文件所在的组件（除非已经被设置在了 `REQUIRES` 中）。以及是当前组件正常工作必须要链接的组件。
- `REQUIRES` 和 `PRIV_REQUIRES` 的值不能依赖于任何配置选项 (`CONFIG_xxx` 宏)。这是因为在配置加载之前，依赖关系就已经被展开。其它组件变量（比如包含路径或源文件）可以依赖配置选择。
- 如果当前组件除了*通用组件依赖项* 中设置的通用组件（比如 RTOS、libc 等）外，并不依赖其它组件，那么对于上述两个 `REQUIRES` 变量，可以选择其中一个或是两个都不设置。

如果组件仅支持某些硬件目标（`IDF_TARGET` 的值），则可以在 `idf_component_register` 中指定 `REQUIRED_IDF_TARGETS` 来声明这个需求。在这种情况下，如果构建系统导入了不支持当前硬件目标的组件时就会报错。

注解： 在 CMake 中，`REQUIRES` 和 `PRIV_REQUIRES` 是 CMake 函数 `target_link_libraries(... PUBLIC ...)` 和 `target_link_libraries(... PRIVATE ...)` 的近似包装。

组件依赖示例

假设现在有一个 car 组件，它需要使用 engine 组件，而 engine 组件需要使用 spark_plug 组件：

```
- autoProject/
             - CMakeLists.txt
             - components/ - car/ - CMakeLists.txt
                                  - car.c
                                  - car.h
                           - engine/ - CMakeLists.txt
                                     - engine.c
                                     - include/ - engine.h
                           - spark_plug/  - CMakeLists.txt
                                          - plug.c
                                          - plug.h
```

Car 组件 car.h 头文件是 car 组件的公共接口。该头文件直接包含了 engine.h，这是因为它需要使用 engine.h 中的一些声明：

```
/* car.h */
#include "engine.h"

#ifdef ENGINE_IS_HYBRID
#define CAR_MODEL "Hybrid"
#endif
```

同时 car.c 也包含了 car.h：

```
/* car.c */
#include "car.h"
```

这代表文件 car/CMakeLists.txt 需要声明 car 需要 engine：

```
idf_component_register(SRCS "car.c"
                    INCLUDE_DIRS "."
                    REQUIRES engine)
```

- SRCS 提供 car 组件中源文件列表。
- INCLUDE_DIRS 提供该组件公共头文件目录列表，由于 car.h 是公共接口，所以这里列出了所有包含了 car.h 的目录。
- REQUIRES 给出该组件的公共接口所需的组件列表。由于 car.h 是一个公共头文件并且包含了来自 engine 的头文件，所以我们这里包含 engine。这样可以确保任何包含 car.h 的其他组件也能递归地包含所需的 engine.h。

Engine 组件 engine 组件也有一个公共头文件 include/engine.h，但这个头文件更为简单：

```
/* engine.h */
#define ENGINE_IS_HYBRID

void engine_start(void);
```

在 engine.c 中执行：

```
/* engine.c */
#include "engine.h"
#include "spark_plug.h"

...
```

在该组件中，engine 依赖于 spark_plug，但这是私有依赖关系。编译 engine.c 需要 spark_plug.h 但不需要包含 engine.h。

这代表文件 engine/CMakeLists.txt 可以使用 PRIV_REQUIRES：

```
idf_component_register(SRCS "engine.c"
                       INCLUDE_DIRS "include"
                       PRIV_REQUIRES spark_plug)
```

因此，car 组件中的源文件不需要在编译器搜索路径中添加 spark_plug include 目录。这可以加快编译速度，避免编译器命令行过于的冗长。

Spark Plug 组件 spark_plug 组件没有依赖项，它有一个公共头文件 spark_plug.h，但不包含其他组件的头文件。

这代表 spark_plug/CMakeLists.txt 文件不需要任何 REQUIRES 或 PRIV_REQUIRES：

```
idf_component_register(SRCS "spark_plug.c"
                       INCLUDE_DIRS ".")
```

源文件 Include 目录

每个组件的源文件都是用这些 Include 路径目录编译的，这些路径在传递给 idf_component_register 的参数中指定：

```
idf_component_register(..
                         INCLUDE_DIRS "include"
                         PRIV_INCLUDE_DIRS "other")
```

- 当前组件的 INCLUDE_DIRS 和 PRIV_INCLUDE_DIRS。
- REQUIRES 和 PRIV_REQUIRES 参数指定的所有其他组件（即当前组件的所有公共和私有依赖项）所设置的 INCLUDE_DIRS。
- 递归列出所有组件 REQUIRES 列表中 INCLUDE_DIRS 目录（如递归展开这个组件的所有公共依赖项）。

主要组件依赖项

main 组件比较特别，因为它在构建过程中自动依赖所有其他组件。所以不需要向这个组件传递 REQUIRES 或 PRIV_REQUIRES。有关不再使用 main 组件时需要更改哪些内容，请参考*重命名 main 组件*。

通用组件依赖项

为避免重复性工作，各组件都用自动依赖一些“通用”IDF 组件，即使它们没有被明确提及。这些组件的头文件会一直包含在构建系统中。

通用组件包括：freertos、newlib、heap、log、soc、esp_rom、esp_common、xtensa/riscv、cxx。

在构建中导入组件

- 默认情况下，每个组件都会包含在构建系统中。
- 如果将 COMPONENTS 变量设置为项目直接使用的最小组件列表，那么构建系统会扩展到包含所有组件。完整的组件列表为：
  - COMPONENTS 中明确提及的组件。
  - 这些组件的依赖项（以及递归运算后的组件）。
  - 每个组件都依赖的通用组件。
- 将 COMPONENTS 设置为所需组件的最小列表，可以显著减少项目的构建时间。

构建系统中依赖处理的实现细节

- 在 CMake 配置进程的早期阶段会运行 `expand_requirements.cmake` 脚本。该脚本会对所有组件的 CMakeLists.txt 文件进行局部的运算，得到一张组件依赖关系图（此图可能会有闭环）。此图用于在构建目录中生成 `component_depends.cmake` 文件。
- CMake 主进程会导入该文件，并以此来确定要包含到构建系统中的组件列表（内部使用的 `BUILD_COMPONENTS` 变量）。`BUILD_COMPONENTS` 变量已排好序，依赖组件会排在前面。由于组件依赖关系图中可能存在闭环，因此不能保证每个组件都满足该排序规则。如果给定相同的组件集和依赖关系，那么最终的排序结果应该是确定的。
- CMake 会将 `BUILD_COMPONENTS` 的值以 "Component names:" 的形式打印出来。
- 然后执行构建系统中包含的每个组件的配置。
- 每个组件都被正常包含在构建系统中，然后再次执行 CMakeLists.txt 文件，将组件库加入构建系统。

组件依赖顺序 `BUILD_COMPONENTS` 变量中组件的顺序决定了构建过程中的其它顺序，包括：

- 项目导入*project_include.cmake* 文件的顺序。
- 生成用于编译（通过 `-I` 参数）的头文件路径列表的顺序。请注意，对于给定组件的源文件，仅需将该组件的依赖组件的头文件路径告知编译器。

覆盖项目的部分设置

project_include.cmake 如果组件的某些构建行为需要在组件 CMakeLists 文件之前被执行，您可以在组件目录下创建名为 `project_include.cmake` 的文件，`project.cmake` 在运行过程中会导入此 CMake 文件。

`project_include.cmake` 文件在 ESP-IDF 内部使用，以定义项目范围内的构建功能，比如 `esptool.py` 的命令行参数和 `bootloader` 这个特殊的应用程序。

与组件 `CMakeLists.txt` 文件有所不同，在导入 "project_include.cmake" 文件的时候，当前源文件目录（即 `CMAKE_CURRENT_SOURCE_DIR`` 和工作目录）为项目目录。如果想获得当前组件的绝对路径，可以使用 ``COMPONENT_PATH` 变量。

请注意，`project_include.cmake` 对于大多数常见的组件并不是必需的。例如给项目添加 include 搜索目录，给最终的链接步骤添加 `LDFLAGS` 选项等等都可以通过 `CMakeLists.txt` 文件来自定义。详细信息请参考可选的项目变量。

`project_include.cmake` 文件会按照 `BUILD_COMPONENTS` 变量中组件的顺序（由 CMake 记录）依次导入。即只有在当前组件所有依赖组件的 `project_include.cmake` 文件都被导入后，当前组件的 `project_include.cmake` 文件才会被导入，除非两个组件在同一个依赖闭环中。如果某个 `project_include.cmake` 文件依赖于另一组件设置的变量，则要特别注意上述情况。更多详情请参阅构建系统中依赖处理的实现细节。

在 `project_include.cmake` 文件中设置变量或目标时要格外小心，这些值被包含在项目的顶层 CMake 文件中，因此他们会影响或破坏所有组件的功能。

KConfig.projbuild 与 `project_include.cmake` 类似，也可以为组件定义一个 KConfig 文件以实现全局的组件配置。如果要在 menuconfig 的顶层添加配置选项，而不是在 "Component Configuration" 子菜单中，则可以在 `CMakeLists.txt` 文件所在目录的 KConfig.projbuild 文件中定义这些选项。

在此文件中添加配置时要小心，因为这些配置会包含在整个项目配置中。在可能的情况下，请为组件配置 创建 KConfig 文件。

`project_include.cmake` 文件在 ESP-IDF 内部使用，以定义项目范围内的构建功能，比如 `esptool.py` 的命令行参数和 `bootloader` 这个特殊的应用程序。

仅配置组件 仅配置组件是一类不包含源文件的特殊组件，仅包含 `Kconfig.projbuild`、`KConfig` 和 `CMakeLists.txt` 文件，该 `CMakeLists.txt` 文件仅有一行代码，调用了 `idf_component_register()` 函数。此函数会将组件导入到项目构建中，但不会构建任何库，也不会将头文件添加到任何 include 搜索路径中。

CMake 调试

请查看 CMake v3.5 官方文档 获取更多关于 CMake 和 CMake 命令的信息。

调试 ESP-IDF CMake 构建系统的一些技巧：

- CMake 运行时，会打印大量诊断信息，包括组件列表和组件路径。
- 运行 `cmake -DDEBUG=1`，IDF 构建系统会生成更详细的诊断输出。
- 运行 `cmake` 时指定 `--trace` 或 `--trace-expand` 选项会提供大量有关控制流信息。详情请参考 CMake 命令行文档。

当从项目 CMakeLists 文件导入时，`project.cmake` 文件会定义工具模块和全局变量，并在系统环境中没有设置 `IDF_PATH` 时设置 `IDF_PATH`。

同时还定义了一个自定义版本的内置 CMake `project` 函数，这个函数被覆盖，以添加所有 ESP-IDF 特定的项目功能。

警告未定义的变量 默认情况下，`idf.py` 在调用 CMake 时会给它传递 `--warn-uninitialized` 标志，如果在构建的过程中引用了未定义的变量，CMake 会打印警告。这对查找有错误的 CMake 文件非常有用。

如果您不想启用此功能，可以给 `idf.py` 传递 `--no-warnings` 标志。

更多信息，请参考文件 /tools/cmake/project.cmake 以及 /tools/cmake/ 中支持的函数。

4.5.9 组件 CMakeLists 示例

因为构建环境试图设置大多数情况都能工作的合理默认值，所以组件 `CMakeLists.txt` 文件可能非常小，甚至是空的，请参考最小组件 *CMakeLists* 文件。但有些功能往往需要覆盖预设的组件变量 才能实现。

以下是组件 CMakeLists 文件的更高级的示例。

添加条件配置

配置系统可用于根据项目配置中选择的选项有条件地编译某些文件。

`Kconfig`:

```
config FOO_ENABLE_BAR
    bool "Enable the BAR feature."
    help
        This enables the BAR feature of the FOO component.
```

`CMakeLists.txt`:

```
set(srcs "foo.c" "more_foo.c")

if(CONFIG_FOO_ENABLE_BAR)
    list(APPEND srcs "bar.c")
endif()

idf_component_register(SRCS "${srcs}"
                       ...)
```

上述示例使用了 CMake 的 if 函数和 list APPEND 函数。

也可用于选择或删除某一实现，如下所示：

`Kconfig`:

```
config ENABLE_LCD_OUTPUT
    bool "Enable LCD output."
    help
        Select this if your board has a LCD.

config ENABLE_LCD_CONSOLE
    bool "Output console text to LCD"
    depends on ENABLE_LCD_OUTPUT
    help
        Select this to output debugging output to the lcd

config ENABLE_LCD_PLOT
    bool "Output temperature plots to LCD"
    depends on ENABLE_LCD_OUTPUT
    help
        Select this to output temperature plots
```

CMakeLists.txt:

```
if(CONFIG_ENABLE_LCD_OUTPUT)
   set(srcs lcd-real.c lcd-spi.c)
else()
   set(srcs lcd-dummy.c)
endif()

# 如果启用了控制台或绘图功能，则需要加入字体
if(CONFIG_ENABLE_LCD_CONSOLE OR CONFIG_ENABLE_LCD_PLOT)
   list(APPEND srcs "font.c")
endif()

idf_component_register(SRCS "${srcs}"
                       ...)
```

硬件目标的条件判断

CMake 文件可以使用 IDF_TARGET 变量来获取当前的硬件目标。

此外，如果当前的硬件目标是 xyz （即 IDF_TARGET=xyz），那么 Kconfig 变量 CONFIG_IDF_TARGET_XYZ 同样也会被设置。

请注意，组件可以依赖 IDF_TARGET 变量，但不能依赖这个 Kconfig 变量。同样也不可在 CMake 文件的 include 语句中使用 Kconfig 变量，在这种上下文中可以使用 IDF_TARGET。

生成源代码

有些组件的源文件可能并不是由组件本身提供，而必须从另外的文件生成。假设组件需要一个头文件，该文件由 BMP 文件转换后（使用 bmp2h 工具）的二进制数据组成，然后将头文件包含在名为 graphics_lib.c 的文件中:

```
add_custom_command(OUTPUT logo.h
     COMMAND bmp2h -i ${COMPONENT_DIR}/logo.bmp -o log.h
     DEPENDS ${COMPONENT_DIR}/logo.bmp
     VERBATIM)

add_custom_target(logo DEPENDS logo.h)
add_dependencies(${COMPONENT_LIB} logo)

set_property(DIRECTORY "${COMPONENT_DIR}" APPEND PROPERTY
     ADDITIONAL_MAKE_CLEAN_FILES logo.h)
```

这个示例改编自 CMake 的一则 FAQ，其中还包含了一些同样适用于 ESP-IDF 构建系统的示例。

这个示例会在当前目录（构建目录）中生成 logo.h 文件，而 logo.bmp 会随组件一起提供在组件目录中。因为 logo.h 是一个新生成的文件，一旦项目需要清理，该文件也应该要被清除。因此，要将该文件添加到 ADDITIONAL_MAKE_CLEAN_FILES 属性中。

注解： 如果需要生成文件作为项目 CMakeLists.txt 的一部分，而不是作为组件 CMakeLists.txt 的一部分，此时需要使用 `${PROJECT_PATH}` 替代 `${COMPONENT_DIR}`，使用 `${PROJECT_NAME}.elf` 替代 `${COMPONENT_LIB}`。

如果某个源文件是从其他组件中生成，且包含 `logo.h` 文件，则需要调用 `add_dependencies`，在这两个组件之间添加一个依赖项，以确保组件源文件按照正确顺序进行编译。

嵌入二进制数据

有时您的组件希望使用一个二进制文件或者文本文件，但是您又不希望将它们重新格式化为 C 源文件。

这时，您可以在组件注册中指定 `EMBED_FILES` 参数，用空格分隔要嵌入的文件名称:

```
idf_component_register(...
                       EMBED_FILES server_root_cert.der)
```

或者，如果文件是字符串，则可以使用 `EMBED_TXTFILES` 变量，把文件的内容转成以 null 结尾的字符串嵌入:

```
idf_component_register(...
                       EMBED_TXTFILES server_root_cert.pem)
```

文件的内容会被添加到 Flash 的.rodata 段，用户可以通过符号名来访问，如下所示:

```
extern const uint8_t server_root_cert_pem_start[] asm("_binary_server_root_cert_
↪pem_start");
extern const uint8_t server_root_cert_pem_end[]   asm("_binary_server_root_cert_
↪pem_end");
```

符号名会根据文件全名生成，如 `EMBED_FILES` 中所示，字符 `/`、`.` 等都会被下划线替代。符号名称中的 _binary 前缀由 objcopy 命令添加，对文本文件和二进制文件都是如此。

如果要将文件嵌入到项目中，而非组件中，可以调用 `target_add_binary_data` 函数:

```
target_add_binary_data(myproject.elf "main/data.bin" TEXT)
```

并将这行代码放在项目 CMakeLists.txt 的 `project()` 命令之后，修改 `myproject.elf` 为你自己的项目名。如果最后一个参数是 `TEXT`，那么构建系统会嵌入以 null 结尾的字符串，如果最后一个参数被设置为 `BINARY`，则将文件内容按照原样嵌入。

有关使用此技术的示例，请查看 file_serving 示例 protocols/http_server/file_serving/main/CMakeLists.txt 中的 main 组件，两个文件会在编译时加载并链接到固件中。

也可以嵌入生成的文件:

```
add_custom_command(OUTPUT my_processed_file.bin
                   COMMAND my_process_file_cmd my_unprocessed_file.bin)
target_add_binary_data(my_target "my_processed_file.bin" BINARY)
```

上述示例中，`my_processed_file.bin` 是通过命令 `my_process_file_cmd` 从文件 `my_unprocessed_file.bin` 中生成，然后嵌入到目标中。

使用 `DEPENDS` 参数来指明对目标的依赖性:

```
add_custom_target(my_process COMMAND ...)
target_add_binary_data(my_target "my_embed_file.bin" BINARY DEPENDS my_process)
```

target_add_binary_data 的 DEPENDS 参数确保目标首先执行。

代码和数据的存放

ESP-IDF 还支持自动生成链接脚本，它允许组件通过链接片段文件定义其代码和数据在内存中的存放位置。构建系统会处理这些链接片段文件，并将处理后的结果扩充进链接脚本，从而指导应用程序二进制文件的链接过程。更多详细信息与快速上手指南，请参阅链接脚本生成机制。

完全覆盖组件的构建过程

当然，在有些情况下，上面提到的方法不一定够用。如果组件封装了另一个第三方组件，而这个第三方组件并不能直接在 ESP-IDF 的构建系统中工作，在这种情况下，就需要放弃 ESP-IDF 的构建系统，改为使用 CMake 的 ExternalProject 功能。组件 CMakeLists 示例如下:

```
# 用于 quirc 的外部构建过程，在源目录中运行
# 并生成 libquirc.a
externalproject_add(quirc_build
    PREFIX ${COMPONENT_DIR}
    SOURCE_DIR ${COMPONENT_DIR}/quirc
    CONFIGURE_COMMAND ""
    BUILD_IN_SOURCE 1
    BUILD_COMMAND make CC=${CMAKE_C_COMPILER} libquirc.a
    INSTALL_COMMAND ""
    )

# 将 libquirc.a 添加到构建系统中
add_library(quirc STATIC IMPORTED GLOBAL)
add_dependencies(quirc quirc_build)

set_target_properties(quirc PROPERTIES IMPORTED_LOCATION
    ${COMPONENT_DIR}/quirc/libquirc.a)
set_target_properties(quirc PROPERTIES INTERFACE_INCLUDE_DIRECTORIES
    ${COMPONENT_DIR}/quirc/lib)

set_directory_properties( PROPERTIES ADDITIONAL_MAKE_CLEAN_FILES
    "${COMPONENT_DIR}/quirc/libquirc.a")
```

(上述 CMakeLists.txt 可用于创建名为 quirc 的组件，该组件使用自己的 Makefile 构建 quirc 项目。)

- externalproject_add 定义了一个外部构建系统。
  - 设置 SOURCE_DIR、CONFIGURE_COMMAND、BUILD_COMMAND 和 INSTALL_COMMAND。如果外部构建系统没有配置这一步骤，可以将 CONFIGURE_COMMAND 设置为空字符串。在 ESP-IDF 的构建系统中，一般会将 INSTALL_COMMAND 变量设置为空。
  - 设置 BUILD_IN_SOURCE，即构建目录与源目录相同。否则，您也可以设置 BUILD_DIR 变量。
  - 有关 externalproject_add() 命令的详细信息，请参阅 ExternalProject。
- 第二组命令添加了一个目标库，指向外部构建系统生成的库文件。为了添加 include 目录，并告知 CMake 该文件的位置，需要再设置一些属性。
- 最后，生成的库被添加到 ADDITIONAL_MAKE_CLEAN_FILES 中。即执行 make clean 后会删除该库。请注意，构建系统中的其他目标文件不会被删除。

注解: 当外部构建系统使用 PSRAM 时，请记得将 -mfix-esp32-psram-cache-issue 添加到 C 编译器的参数中。关于该标志的更多详细信息，请参考*CONFIG_SPIRAM_CACHE_WORKAROUND*。

ExternalProject 的依赖与构建清理 对于外部项目的构建，CMake 会有一些不同寻常的行为：

- ADDITIONAL_MAKE_CLEAN_FILES 仅在使用 Make 构建系统时有效。如果使用 Ninja 或 IDE 自带的构建系统，执行项目清理时，这些文件不会被删除。
- ExternalProject 会在 clean 运行后自动重新运行配置和构建命令。
- 可以采用以下两种方法来配置外部构建命令：
  1. 将外部 `BUILD_COMMAND` 命令设置为对所有源代码完整的重新编译。如果传递给 `externalproject_add` 命令的 `DEPENDS` 的依赖项发生了改变，或者当前执行的是项目清理操作（即运行了 `idf.py clean`、`ninja clean` 或者 `make clean`），那么就会执行该命令。
  2. 将外部 `BUILD_COMMAND` 命令设置为增量式构建命令，并给 `externalproject_add` 传递 `BUILD_ALWAYS 1` 参数。即不管实际的依赖情况，每次构建时，都会构建外部项目。这种方式仅当外部构建系统具备增量式构建的能力，且运行时间不会很长时才推荐。

构建外部项目的最佳方法取决于项目本身、其构建系统，以及是否需要频繁重新编译项目。

4.5.10 自定义 sdkconfig 的默认值

对于示例工程或者其他您不想指定完整 sdkconfig 配置的项目，但是您确实希望覆盖 ESP-IDF 默认值中的某些键值，则可以在项目中创建 `sdkconfig.defaults` 文件。重新创建新配置时将会用到此文件，另外在 `sdkconfig` 没有设置新配置值时，上述文件也会被用到。

如若需要覆盖此文件的名称或指定多个文件，请设置 `SDKCONFIG_DEFAULTS` 环境变量或在顶层 CMakeLists.txt 文件中设置 `SDKCONFIG_DEFAULTS`。在指定多个文件时，使用分号作为分隔符。未指定完整路径的文件名将以当前项目的相对路径来解析。

依赖于硬件目标的 sdkconfig 默认值

除了 `sdkconfig.defaults` 之外，构建系统还将从 `sdkconfig.defaults.TARGET_NAME` 文件加载默认值，其中 `IDF_TARGET` 的值为 `TARGET_NAME`。例如，对于 `ESP32` 这个硬件目标，sdkconfig 的默认值会首先从 `sdkconfig.defaults` 获取，然后再从 `sdkconfig.defaults.esp32` 获取。

如果使用 `SDKCONFIG_DEFAULTS` 覆盖了 sdkconfig 默认文件的名称，则硬件目标的 sdkconfig 默认文件名也会从 `SDKCONFIG_DEFAULTS` 值中派生。

4.5.11 Flash 参数

有些情况下，我们希望在没有 IDF 时也能烧写目标板，为此，我们希望可以保存已构建的二进制文件、esptool.py 和 esptool write_flash 命令的参数。可以通过编写一段简单的脚本来保存二进制文件和 esptool.py。

运行项目构建之后，构建目录将包含项目二进制输出文件（`.bin` 文件），同时也包含以下烧录数据文件：

- `flash_project_args` 包含烧录整个项目的参数，包括应用程序 (app)、引导程序 (bootloader)、分区表，如果设置了 PHY 数据，也会包含此数据。
- `flash_app_args` 只包含烧录应用程序的参数。
- `flash_bootloader_args` 只包含烧录引导程序的参数。

您可以参照如下命令将任意烧录参数文件传递给 `esptool.py`:

```
python esptool.py --chip esp32 write_flash @build/flash_project_args
```

也可以手动复制参数文件中的数据到命令行中执行。

构建目录中还包含生成的 `flasher_args.json` 文件，此文件包含 JSON 格式的项目烧录信息，可用于 `idf.py` 和其它需要项目构建信息的工具。

4.5.12 构建 Bootloader

引导程序默认作为 `idf.py build` 的一部分被构建，也可以通过 `idf.py bootloader` 来单独构建。

引导程序是 /components/bootloader/subproject 内部独特的“子项目”，它有自己的项目 CMakeLists.txt 文件，能够构建独立于主项目的 .ELF 和 .BIN 文件，同时它又与主项目共享配置和构建目录。

子项目通过 /components/bootloader/project_include.cmake 文件作为外部项目插入到项目的顶层，主构建进程会运行子项目的 CMake，包括查找组件（主项目使用的组件的子集），生成引导程序专用的配置文件（从主 sdkconfig 文件中派生）。

4.5.13 选择目标芯片

ESP-IDF 支持多款芯片，它们通过在软件中使用不同的“目标”(target) 名进行区分，具体对应关系如下：

- esp32 —适用于 ESP32-D0WD、ESP32-D2WD、ESP32-S0WD (ESP-SOLO)、ESP32-U4WDH、ESP32-PICO-D4
- esp32s2—适用于 ESP32-S2
- esp32c3—适用于 ESP32-C3

在构建项目前，请首先根据您的芯片选择正确的软件目标，具体命令为 idf.py set-target <target>。举例

```
idf.py set-target esp32s2
```

重要： 运行 idf.py set-target 命令将清除 build 文件夹的内容，并重新生成一个 sdkconfig 文件。之前的 sdkconfig 将另存为 sdkconfig.old。

注解： 运行 idf.py set-target 命令相当于分别运行以下几个命令：

1. 清除 build 文件夹 (idf.py fullclean)
2. 移除 sdkconfig 文件 (mv sdkconfig sdkconfig.old)
3. 根据选择的“目标”芯片配置项目 (idf.py -DIDF_TARGET=esp32 reconfigure)

您也可以将要用的 IDF_TARGET 设置为环境变量，比如：export IDF_TARGET=esp32s2；或设置为 CMake 变量，比如将 -DIDF_TARGET=esp32s2 以参数形式传递给 CMake 或 idf.py。如果您大多数时间仅使用一款芯片，则将 IDF_TARGET 配置为环境变量比较方便。

对于特定项目，您可以使用以下方式为 IDF_TARGET 配置 _default_ 值：把 CONFIG_IDF_TARGET 的值加入 sdkconfig.defaults。举例而言，配置 CONFIG_IDF_TARGET="esp32s2"。这样一来，除非特别设置（比如使用环境变量、CMake 变量或 idf.py set-target 命令），否则 IDF_TARGET 将默认采用 CONFIG_IDF_TARGET。

如果您从未通过以上述任何方式配置过“目标”芯片，则构建系统会默认将 esp32 设定为“目标”芯片。

4.5.14 编写纯 CMake 组件

ESP-IDF 构建系统用“组件”的概念“封装”了 CMake，并提供了很多帮助函数来自动将这些组件集成到项目构建当中。

然而，“组件”概念的背后是一个完整的 CMake 构建系统，因此可以制作纯 CMake 组件。

下面是使用纯 CMake 语法为 json 组件编写的最小 CMakeLists 文件的示例：

```
add_library(json STATIC
cJSON/cJSON.c
cJSON/cJSON_Utils.c)

target_include_directories(json PUBLIC cJSON)
```

- 这实际上与 IDF 中的 json 组件 是等效的。

- 因为组件中的源文件不多，所以这个 CMakeLists 文件非常简单。对于具有大量源文件的组件而言，ESP-IDF 支持的组件通配符，可以简化组件 CMakeLists 的样式。
- 每当组件中新增一个与组件同名的库目标时，ESP-IDF 构建系统会自动将其添加到构建中，并公开公共的 include 目录。如果组件想要添加一个与组件不同名的库目标，就需要使用 CMake 命令手动添加依赖关系。

4.5.15 组件中使用第三方 CMake 项目

CMake 在许多开源的 C/C++ 项目中广泛使用，用户可以在自己的应用程序中使用开源代码。CMake 构建系统的一大好处就是可以导入这些第三方的项目，有时候甚至不用做任何改动。这就允许用户使用当前 ESP-IDF 组件尚未提供的功能，或者使用其它库来实现相同的功能。

假设 `main` 组件需要导入一个假想库 `foo`，相应的组件 CMakeLists 文件如下所示:

```
# 注册组件
idf_component_register(...)

# 设置 `foo` 项目中的一些 CMake 变量，以控制 `foo` 的构建过程
set(FOO_BUILD_STATIC OFF)
set(FOO_BUILD_TESTS OFF)

# 创建并导入第三方库目标
add_subdirectory(foo)

# 将 `foo` 目标公开链接至 `main` 组件
target_link_libraries(main PUBLIC foo)
```

实际的案例请参考 build_system/cmake/import_lib。请注意，导入第三方库所需要做的工作可能会因库的不同而有所差异。建议仔细阅读第三方库的文档，了解如何将其导入到其它项目中。阅读第三方库的 CMakeLists.txt 文件以及构建结构也会有所帮助。

用这种方式还可以将第三方库封装成 ESP-IDF 的组件。例如 mbedtls 组件就是封装了 mbedtls 项目 得到的。详情请参考 mbedtls 组件的 CMakeLists.txt 文件 。

每当使用 ESP-IDF 构建系统时，CMake 变量 `ESP_PLATFORM` 都会被设置为 1。如果要在通用的 CMake 代码加入 IDF 特定的代码时，可以采用 `if (ESP_PLATFORM)` 的形式加以分隔。

外部库中使用 ESP-IDF 组件

上述示例中假设的是外部库 `foo` （或 `import_lib` 示例中的 `tinyxml` 库）除了常见的 API 如 libc、libstdc++ 等外不需要使用其它 ESP-IDF API。如果外部库需要使用其它 ESP-IDF 组件提供的 API，则需要在外部 CMakeLists.txt 文件中通过添加对库目标 `idf::<componentname>` 的依赖关系。

例如，在 `foo/CMakeLists.txt` 文件:

```
add_library(foo bar.c fizz.cpp buzz.cpp)

if(ESP_PLATFORM)
  # 在 ESP-IDF 中，bar.c 需要包含 spi_flash 组件中的 esp_spi_flash.h
  target_link_libraries(foo PRIVATE idf::spi_flash)
endif()
```

4.5.16 组件中使用预建库

还有一种情况是您有一个由其它构建过程生成预建静态库（`.a` 文件）。

ESP-IDF 构建系统为用户提供了一个实用函数 `add_prebuilt_library`，能够轻松导入并使用预建库:

```
add_prebuilt_library(target_name lib_path [REQUIRES req1 req2 ...] [PRIV_REQUIRES␣
↪req1 req2 ...])
```

其中：

- target_name- 用于引用导入库的名称，如链接到其它目标时
- lib_path- 预建库的路径，可以是绝对路径或是相对于组件目录的相对路径

可选参数 REQUIRES 和 PRIV_REQUIRES 指定对其它组件的依赖性。这些参数与 idf_component_register 的参数的意义相同。

注意预建库的编译目标需与目前的项目相同。预建库的相关参数也要匹配。如果不特别注意，这两个因素可能会导致应用程序中出现 bug。

请查看示例 build_system/cmake/import_prebuilt。

4.5.17 在自定义 CMake 项目中使用 ESP-IDF

ESP-IDF 提供了一个模板 CMake 项目，可以基于此轻松创建应用程序。然而在有些情况下，用户可能已有一个现成的 CMake 项目，或者想自己创建一个 CMake 项目，此时就希望将 IDF 中的组件以库的形式链接到用户目标（库/可执行文件）。

可以通过 tools/cmake/idf.cmake 提供的*build system APIs* 实现该目标。例如：

```
cmake_minimum_required(VERSION 3.5)
project(my_custom_app C)

# 导入提供 ESP-IDF CMake 构建系统 API 的 CMake 文件
include($ENV{IDF_PATH}/tools/cmake/idf.cmake)

# 在构建中导入 ESP-IDF 组件，可以视作等同 add_subdirectory()
# 但为 ESP-IDF 构建增加额外的构建过程
# 具体构建过程
idf_build_process(esp32)

# 创建项目可执行文件
# 使用其别名 idf::newlib 将其链接到 newlib 组件
add_executable(${CMAKE_PROJECT_NAME}.elf main.c)
target_link_libraries(${CMAKE_PROJECT_NAME}.elf idf::newlib)

# 让构建系统知道项目到可执行文件是什么，从而添加更多的目标以及依赖关系等
idf_build_executable(${CMAKE_PROJECT_NAME}.elf)
```

build_system/cmake/idf_as_lib 中的示例演示了如何在自定义的 CMake 项目创建一个类似于 Hello World 的应用程序。

注解： IDF 构建系统只能为其构建的源文件设置编译器标志。当使用外部 CMakeLists.txt 文件并启用 PSRAM 时，记得在 C 编译器参数中添加 mfix-esp32-psram-cache-issue。参见:ref:*CONFIG_SPIRAM_CACHE_WORKAROUND* 了解更多信息。

4.5.18 ESP-IDF CMake 构建系统 API

idf 构建命令

```
idf_build_get_property(var property [GENERATOR_EXPRESSION])
```

检索一个构建属性 *property*，并将其存储在当前作用域可访问的 var 中。特定 *GENERATOR_EXPRESSION* 将检索该属性的生成器表达式字符串（不是实际值），它可与支持生成器表达式的 CMake 命令一起使用。

```
idf_build_set_property(property val [APPEND])
```

设置构建属性 *property* 的值为 *val*。特定 *APPEND* 将把指定的值附加到属性当前值之后。如果该属性之前不存在或当前为空，则指定的值将变为第一个元素/成员。

```
idf_build_component(component_dir)
```

向构建系统提交一个包含组件的 *component_dir* 目录。相对路径会被转换为相对于当前目录的绝对路径。所有对该命令的调用必须在 'idf_build_process'之前执行。

该命令并不保证组件在构建过程中会被处理（参见 *idf_build_process* 中 *COMPONENTS* 参数说明）

```
idf_build_process(target
                  [PROJECT_DIR project_dir]
                  [PROJECT_VER project_ver]
                  [PROJECT_NAME project_name]
                  [SDKCONFIG sdkconfig]
                  [SDKCONFIG_DEFAULTS sdkconfig_defaults]
                  [BUILD_DIR build_dir]
                  [COMPONENTS component1 component2 ...])
```

为导入 ESP-IDF 组件执行大量的幕后工作，包括组件配置、库创建、依赖性扩展和解析。在这些功能中，对于用户最重要的可能是通过调用每个组件的 `idf_component_register` 来创建库。该命令为每个组件创建库，这些库可以使用别名来访问，其形式为 idf::*component_name*。这些别名可以用来将组件链接到用户自己的目标、库或可执行文件上。

该调用要求用 *target* 参数指定目标芯片。调用的可选参数包括：

- PROJECT_DIR - 项目目录，默认为 CMAKE_SOURCE_DIR。
- PROJECT_NAME - 项目名称，默认为 CMAKE_PROJECT_NAME。
- PROJECT_VER - 项目的版本/版本号，默认为“1”。
- SDKCONFIG - 生成的 sdkconfig 文件的输出路径，根据是否设置 PROJECT_DIR，默认为 PROJECT_DIR/sdkconfig 或 CMAKE_SOURCE_DIR/sdkconfig。
- SDKCONFIG_DEFAULTS - 包含默认配置的文件列表（列表中必须包含完整的路径），默认为空；对于列表中的每个值 *filename*，如果存在的话，也会加载文件 *filename.target* 中的配置。对于列表中的 *filename* 的每一个值，也会加载文件 *filename.target* （如果存在的话）中的配置。
- BUILD_DIR - 用于放置 ESP-IDF 构建相关工具的目录，如生成的二进制文件、文本文件、组件；默认为 CMAKE_BINARY_DIR。
- COMPONENTS - 从构建系统已知的组件中选择要处理的组件（通过 `idf_build_component` 添加）。这个参数用于精简构建过程。如果在依赖链中需要其它组件，则会自动添加，即自动添加这个列表中组件的公共和私有依赖项，进而添加这些依赖项的公共和私有依赖，以此类推。如果不指定，则会处理构建系统已知的所有组件。

```
idf_build_executable(executable)
```

指定 ESP-IDF 构建的可执行文件 *executable*。这将添加额外的目标，如与 flash 相关的依赖关系，生成额外的二进制文件等。应在 `idf_build_process` 之后调用。

```
idf_build_get_config(var config [GENERATOR_EXPRESSION])
```

获取指定配置的值。就像构建属性一样，特定 *GENERATOR_EXPRESSION* 将检索该配置的生成器表达式字符串，而不是实际值，即可以与支持生成器表达式的 CMake 命令一起使用。然而，实际的配置值只有在调用 `idf_build_process` 后才能知道。

idf 构建属性

可以通过使用构建命令 `idf_build_get_property` 来获取构建属性的值。例如，以下命令可以获取构建过程中使用的 Python 解释器的相关信息。

```
idf_build_get_property(python PYTHON)
message(STATUS "The Python intepreter is: ${python}")
```

- BUILD_DIR - 构建目录；由 idf_build_process 的 BUILD_DIR 参数设置。
- BUILD_COMPONENTS - 包含在构建中的组件列表；由 idf_build_process 设置。
- BUILD_COMPONENT_ALIASES - 包含在构建中的组件的库别名列表；由 idf_build_process 设置。
- C_COMPILE_OPTIONS - 适用于所有组件的 C 源代码文件的编译选项。
- COMPILE_OPTIONS - 适用于所有组件的源文件（无论是 C 还是 C++）的编译选项。
- COMPILE_DEFINITIONS - 适用于所有组件源文件的编译定义。
- CXX_COMPILE_OPTIONS - 适用于所有组件的 C++ 源文件的编译选项。
- EXECUTABLE - 项目可执行文件；通过调用 idf_build_executable 设置。
- EXECUTABLE_NAME - 不含扩展名的项目可执行文件的名称；通过调用 idf_build_executable 设置。
- EXECUTABLE_DIR - 输出的可执行文件的路径
- IDF_PATH - ESP-IDF 路径；由 IDF_PATH 环境变量设置，或者从 idf.cmake 的位置推断。
- IDF_TARGET - 构建的目标芯片；由 idf_build_process 的目标参数设置。
- IDF_VER - ESP-IDF 版本；由版本文件或 IDF_PATH 仓库的 Git 版本设置。
- INCLUDE_DIRECTORIES - 包含所有组件源文件的目录。
- KCONFIGS - 构建过程中组件里的 Kconfig 文件的列表；由 idf_build_process 设置。
- KCONFIG_PROJBUILDS - 构建过程中组件中的 Kconfig.projbuild 文件的列表；由 idf_build_process 设置。
- PROJECT_NAME - 项目名称；由 idf_build_process 的 PROJECT_NAME 参数设置。
- PROJECT_DIR - 项目的目录；由 idf_build_process 的 PROJECT_DIR 参数设置。
- PROJECT_VER - 项目的版本；由 idf_build_process 的 PROJECT_VER 参数设置。
- PYTHON - 用于构建的 Python 解释器；如果有则从 PYTHON 环境变量中设置，如果没有，则使用“python”。
- SDKCONFIG - 输出的配置文件的完整路径；由 idf_build_process SDKCONFIG 参数设置。
- SDKCONFIG_DEFAULTS - 包含默认配置的文件列表；由 idf_build_process SDKCONFIG_DEFAULTS 参数设置。
- SDKCONFIG_HEADER - 包含组件配置的 C/C++ 头文件的完整路径；由 idf_build_process 设置。
- SDKCONFIG_CMAKE - 包含组件配置的 CMake 文件的完整路径；由 idf_build_process 设置。
- SDKCONFIG_JSON - 包含组件配置的 JSON 文件的完整路径；由 idf_build_process 设置。
- SDKCONFIG_JSON_MENUS - 包含配置菜单的 JSON 文件的完整路径；由 idf_build_process 设置。

idf 组件命令

```
idf_component_get_property(var component property [GENERATOR_EXPRESSION])
```

检索一个指定的 *component* 的组件属性 *property*，并将其存储在当前作用域可访问的 *var* 中。指定 *GENERATOR_EXPRESSION* 将检索该属性的生成器表达式字符串（不是实际值），它可以在支持生成器表达式的 CMake 命令中使用。

```
idf_component_set_property(component property val [APPEND])
```

设置指定的 *component* 的组件属性，*property* 的值为 *val*。特定 *APPEND* 将把指定的值追加到属性的当前值后。如果该属性之前不存在或当前为空，指定的值将成为第一个元素/成员。

```
idf_component_register([[SRCS src1 src2 ...] | [[SRC_DIRS dir1 dir2 ...] [EXCLUDE_
↪SRCS src1 src2 ...]]
                       [INCLUDE_DIRS dir1 dir2 ...]
                       [PRIV_INCLUDE_DIRS dir1 dir2 ...]
                       [REQUIRES component1 component2 ...]
                       [PRIV_REQUIRES component1 component2 ...]
                       [LDFRAGMENTS ldfragment1 ldfragment2 ...]
```

(下页继续)

(续上页)

```
                        [REQUIRED_IDF_TARGETS target1 target2 ...]
                        [EMBED_FILES file1 file2 ...]
                        [EMBED_TXTFILES file1 file2 ...]
                        [KCONFIG kconfig]
                        [KCONFIG_PROJBUILD kconfig_projbuild])
```

将一个组件注册到构建系统中。就像 `project()` CMake 命令一样，该命令应该直接从组件的 CMakeLists.txt 中调用（而不是通过函数或宏），且建议在其他命令之前调用该命令。下面是一些关于在 `idf_component_register` 之前 不能调用哪些命令的指南：

- 在 CMake 脚本模式下无效的命令。
- 在 project_include.cmake 中定义的自定义命令。
- 除了 `idf_build_get_property` 之外，构建系统的 API 命令；但要考虑该属性是否有被设置。

对变量进行设置和操作的命令，一般可在 `idf_component_register` 之前调用。

`idf_component_register` 的参数包括：

- SRCS - 组件的源文件，用于为组件创建静态库；如果没有指定，组件将被视为仅配置组件，从而创建接口库。
- SRC_DIRS, EXCLUDE_SRCS - 用于通过指定目录来 glob 源文件 (.c、.cpp、.S)，而不是通过 SRCS 手动指定源文件。请注意，这受*CMake 中通配符的限制*。在 EXCLUDE_SRCS 中指定的源文件会从被 glob 的文件中移除。
- INCLUDE_DIRS - 相对于组件目录的路径，该路径将被添加到需要当前组件的所有其他组件的 include 搜索路径中。
- PRIV_INCLUDE_DIRS - 必须是相对于组件目录的目录路径，它仅被添加到这个组件源文件的 include 搜索路径中。
- REQUIRES - 组件的公共组件依赖项。
- PRIV_REQUIRES - 组件的私有组件依赖项；在仅用于配置的组件上会被忽略。
- LDFRAGMENTS - 组件链接器片段文件。
- REQUIRED_IDF_TARGETS - 指定该组件唯一支持的目标。
- KCONFIG - 覆盖默认的 Kconfig 文件。
- KCONFIG_PROJBUILD - 覆盖默认的 Kconfig.projbuild 文件。

以下内容用于*将数据嵌入到组件中*，并在确定组件是否仅用于配置时被视为源文件。这意味着，即使组件没有指定源文件，如果组件指定了以下其中之一，仍然会在内部为组件创建一个静态库。

- EMBED_FILES - 嵌入组件的二进制文件
- EMBED_TXTFILES - 嵌入组件的文本文件

idf 组件属性

组件的属性值可以通过使用构建命令 `idf_component_get_property` 来获取。例如，以下命令可以获取 `freertos` 组件的目录。

```
idf_component_get_property(dir freertos COMPONENT_DIR)
message(STATUS "The 'freertos' component directory is: ${dir}")
```

- COMPONENT_ALIAS - COMPONENT_LIB 的别名，用于将组件链接到外部目标；由 `idf_build_component` 设置，别名库本身由 `idf_component_register` 创建。
- COMPONENT_DIR - 组件目录；由 `idf_build_component` 设置。
- COMPONENT_OVERRIDEN_DIR - 如果*这个组件覆盖了另一个组件*，则包含原组件的目录。
- COMPONENT_LIB - 所创建的组件静态/接口库的名称；由 `idf_build_component` 设置，库本身由 `idf_component_register` 创建。
- COMPONENT_NAME - 组件的名称；由 `idf_build_component` 根据组件的目录名设置。
- COMPONENT_TYPE - 组件的类型（LIBRARY 或 CONFIG_ONLY）。如果一个组件指定了源文件或嵌入了一个文件，那么它的类型就是 LIBRARY。
- EMBED_FILES - 要嵌入组件的文件列表；由 `idf_component_register` EMBED_FILES 参数设置。

- EMBED_TXTFILES - 要嵌入组件的文本文件列表；由 idf_component_register EMBED_TXTFILES 参数设置。
- INCLUDE_DIRS - 组件 include 目录列表；由 idf_component_register INCLUDE_DIRS 参数设置。
- KCONFIG - 组件 Kconfig 文件；由 idf_build_component 设置。
- KCONFIG_PROJBUILD - 组件 Kconfig.projbuild；由 idf_build_component 设置。
- LDFRAGMENTS - 组件链接器片段文件列表；由 idf_component_register LDFRAGMENTS 参数设置。
- PRIV_INCLUDE_DIRS - 组件私有 include 目录列表；在 LIBRARY 类型的组件 idf_component_register PRIV_INCLUDE_DIRS 参数中设置。
- PRIV_REQUIRES - 私有组件依赖关系列表；由 idf_component_register PRIV_REQUIRES 参数设置。
- REQUIRED_IDF_TARGETS - 组件支持的目标列表；由 idf_component_register EMBED_TXTFILES 参数设置。
- REQUIRES - 公共组件依赖关系列表；由 idf_component_register REQUIRES 参数设置。
- SRCS - 组件源文件列表；由 idf_component_register 的 SRCS 或 SRC_DIRS/EXCLUDE_SRCS 参数设置。

4.5.19 文件通配 & 增量构建

在 ESP-IDF 组件中添加源文件的首选方法是在 COMPONENT_SRCS 中手动列出它们:

```
idf_component_register(SRCS library/a.c library/b.c platform/platform.c
                       ...)
```

这是在 CMake 中手动列出源文件的 最佳实践。然而，当有许多源文件都需要添加到构建中时，这种方法就会很不方便。ESP-IDF 构建系统因此提供了另一种替代方法，即使用 SRC_DIRS 来指定源文件:

```
idf_component_register(SRC_DIRS library platform
                       ...)
```

后台会使用通配符在指定的目录中查找源文件。但是请注意，在使用这种方法的时候，如果组件中添加了一个新的源文件，CMake 并不知道重新运行配置，最终该文件也没有被加入构建中。

如果是自己添加的源文件，这种折衷还是可以接受的，因为用户可以触发一次干净的构建，或者运行 idf.py reconfigure 来手动重启 CMake。但是，如果你需要与其他使用 Git 等版本控制工具的开发人员共享项目时，问题就会变得更加困难，因为开发人员有可能会拉取新的版本。

ESP-IDF 中的组件使用了第三方的 Git CMake 集成模块(/tools/cmake/third_party/GetGitRevisionDescription.cmake)，任何时候源码仓库的提交记录发生了改变，该模块就会自动重新运行 CMake。即只要拉取了新的 ESP-IDF 版本，CMake 就会重新运行。

对于不属于 ESP-IDF 的项目组件，有以下几个选项供参考:

- 如果项目文件保存在 Git 中，ESP-IDF 会自动跟踪 Git 修订版本，并在它发生变化时重新运行 CMake。
- 如果一些组件保存在第三方 Git 仓库中（不在项目仓库或 ESP-IDF 仓库），则可以在组件 CMakeLists 文件中调用 git_describe 函数，以便在 Git 修订版本发生变化时自动重启 CMake。
- 如果没有使用 Git，请记住在源文件发生变化时手动运行 idf.py reconfigure。
- 使用 idf_component_register 的 SRCS 参数来列出项目组件中的所有源文件则可以完全避免这一问题。

具体选择哪一方式，就要取决于项目本身，以及项目用户。

4.5.20 构建系统的元数据

为了将 ESP-IDF 集成到 IDE 或者其它构建系统中，CMake 在构建的过程中会在 build/ 目录下生成大量元数据文件。运行 cmake 或 idf.py reconfigure （或任何其它 idf.py 构建命令），可以重新生成这些元数据文件。

- `compile_commands.json` 是标准格式的 JSON 文件，它描述了在项目中参与编译的每个源文件。CMake 其中的一个功能就是生成此文件，许多 IDE 都知道如何解析此文件。
- `project_description.json` 包含有关 ESP-IDF 项目、已配置路径等的一些常规信息。
- `flasher_args.json` 包含 esptool.py 工具用于烧录项目二进制文件的参数，此外还有 `flash_*_args` 文件，可直接与 esptool.py 一起使用。更多详细信息请参阅*Flash 参数*。
- `CMakeCache.txt` 是 CMake 的缓存文件，包含 CMake 进程、工具链等其它信息。
- `config/sdkconfig.json` 包含 JSON 格式的项目配置结果。
- `config/kconfig_menus.json` 是在 menuconfig 中显示菜单的 JSON 格式版本，用于外部 IDE 的 UI。

JSON 配置服务器

`confserver.py` 工具可以帮助 IDE 轻松地与配置系统的逻辑进行集成，它运行在后台，通过使用 stdin 和 stdout 读写 JSON 文件的方式与调用进程交互。

您可以通过 `idf.py confserver` 或 `ninja confserver` 从项目中运行 `confserver.py`，也可以使用不同的构建生成器来触发类似的目标。

有关 confserver.py 的更多信息，请参阅 tools/kconfig_new/README.md

4.5.21 构建系统内部

构建脚本

ESP-IDF 构建系统的列表文件位于 /tools/cmake 中。实现构建系统核心功能的模块如下

- build.cmake - 构建相关命令，即构建初始化、检索/设置构建属性、构建处理。
- component.cmake - 组件相关的命令，如添加组件、检索/设置组件属性、注册组件。
- kconfig.cmake - 从 Kconfig 文件中生成配置文件（sdkconfig、sdkconfig.h、sdkconfig.cmake 等）。
- ldgen.cmake - 从链接器片段文件生成最终链接器脚本。
- target.cmake - 设置构建目标和工具链文件。
- utilities.cmake - 其它帮助命令。

除了这些文件，还有两个重要的 CMake 脚本在 /tools/cmake 中：

- idf.cmake - 设置构建参数并导入上面列出的核心模块。之所以包括在 CMake 项目中，是为了方便访问 ESP-IDF 构建系统功能。
- project.cmake - 导入 `idf.cmake`，并提供了一个自定义的 “project()“命令，该命令负责处理建立可执行文件时所有的繁重工作。包含在标准 ESP-IDF 项目的顶层 CMakeLists.txt 中。

/tools/cmake 中的其它文件都是构建过程中的支持性文件或第三方脚本。

构建过程

本节介绍了标准的 ESP-IDF 应用构建过程。构建过程可以大致分为四个阶段：

图 3: ESP-IDF Build System Process

初始化

该阶段为构建设置必要的参数。

- **在将 `idf.cmake` 导入 `project.cmake` 后，将执行以下步骤：**
  - 在环境变量中设置 `IDF_PATH` 或从顶层 CMakeLists.txt 中包含的 `project.cmake` 路径推断相对路径。
  - 将 /tools/cmake 添加到 `CMAKE_MODULE_PATH` 中，并导入核心模块和各种辅助/第三方脚本。
  - 设置构建工具/可执行文件，如默认的 Python 解释器。
  - 获取 ESP-IDF git 修订版，并存储为 `IDF_VER`。
  - 设置全局构建参数，即编译选项、编译定义、包括所有组件的 include 目录。
  - 将 components 中的组件添加到构建中。
- **自定义 `project()` 命令的初始部分执行以下步骤：**
  - 在环境变量或 CMake 缓存中设置 `IDF_TARGET` 以及设置相应要使用的 “CMAKE_TOOLCHAIN_FILE“。
  - 添加 `EXTRA_COMPONENTS_DIRS` 中的组件至构建中
  - 从 `COMPONENTS`/`EXCLUDE_COMPONENTS`、`SDKCONFIG`、`SDKCONFIG_DEFAULTS` 等变量中为调用命令 `idf_build_process()` 准备参数。

调用 `idf_build_process()` 命令标志着这个阶段的结束。

枚举

这个阶段会建立一个需要在构建过程中处理的组件列表，该阶段在 `idf_build_process()` 的前半部分进行。

- 检索每个组件的公共和私有依赖。创建一个子进程，以脚本模式执行每个组件的 CMakeLists.txt。`idf_component_register` REQUIRES 和 PRIV_REQUIRES 参数的值会返回给父进程。这就是所谓的早期扩展。在这一步中定义变量 `CMAKE_BUILD_EARLY_EXPANSION`。
- 根据公共和私有的依赖关系，递归地导入各个组件。

处理

该阶段处理构建中的组件，是 `idf_build_process()` 的后半部分。

- 从 sdkconfig 文件中加载项目配置，并生成 sdkconfig.cmake 和 sdkconfig.h 头文件。这两个文件分别定义了可以从构建脚本和 C/C++ 源文件/头文件中访问的配置变量/宏。
- 导入各组件的 `project_include.cmake`。
- 将每个组件添加为一个子目录，处理其 CMakeLists.txt。组件 CMakeLists.txt 调用注册命令 `idf_component_register` 添加源文件、导入目录、创建组件库、链接依赖关系等。

完成

该阶段是 `idf_build_process()` 剩余的步骤。

- 创建可执行文件并将其链接到组件库中。
- 生成 project_description.json 等项目元数据文件并且显示所建项目等相关信息。

请参考 /tools/cmake/project.cmake 获取更多信息。

4.5.22 从 ESP-IDF GNU Make 构建系统迁移到 CMake 构建系统

ESP-IDF CMake 构建系统与旧版的 GNU Make 构建系统在某些方面非常相似，开发者都需要提供 include 目录、源文件等。然而，有一个语法上的区别，即对于 ESP-IDF CMake 构建系统，开发者需要将这些作为参数传递给注册命令 `idf_component_register`。

自动转换工具

/tools/cmake/convert_to_cmake.py 中提供了一个项目自动转换工具。运行此命令时需要加上项目路径，如下所示:

```
$IDF_PATH/tools/cmake/convert_to_cmake.py /path/to/project_dir
```

项目目录必须包含 Makefile 文件，并确保主机已安装 GNU Make (make) 工具，并且被添加到了 PATH 环境变量中。

该工具会将项目 Makefile 文件和所有组件的 component.mk 文件转换为对应的 CMakeLists.txt 文件。

转换过程如下：该工具首先运行 make 来展开 ESP-IDF 构建系统设置的变量，然后创建相应的 CMakelists 文件来设置相同的变量。

重要： 当转换工具转换一个 component.mk 文件时，它并不能确定该组件依赖于哪些其他组件。这些信息需要通过编辑新的组件 CMakeLists.txt 文件并添加 REQUIRES 和/或 PRIV_REQUIRES 子句来手动添加。否则，组件中的源文件会因为找不到其他组件的头文件而编译失败。请参考组件依赖 获取更多信息。

转换工具并不能处理复杂的 Makefile 逻辑或异常的目标，这些需要手动转换。

CMake 中不可用的功能

有些功能已从 CMake 构建系统中移除，或者已经发生很大改变。GNU Make 构建系统中的以下变量已从 CMake 构建系统中删除：

- COMPONENT_BUILD_DIR：由 CMAKE_CURRENT_BINARY_DIR 替代。
- COMPONENT_LIBRARY：默认为 $(COMPONENT_NAME).a 但是库名可以被组件覆盖。在 CMake 构建系统中，组件库名称不可再被组件覆盖。
- CC、LD、AR、OBJCOPY：gcc xtensa 交叉工具链中每个工具的完整路径。CMake 使用 CMAKE_C_COMPILER、CMAKE_C_LINK_EXECUTABLE 和 CMAKE_OBJCOPY 进行替代。完整列表请参阅 CMake 语言变量。
- HOSTCC、HOSTLD、HOSTAR：宿主机本地工具链中每个工具的全名。CMake 系统不再提供此变量，外部项目需要手动检测所需的宿主机工具链。
- COMPONENT_ADD_LDFLAGS：用于覆盖链接标志。CMake 中使用 target_link_libraries 命令替代。
- COMPONENT_ADD_LINKER_DEPS：链接过程依赖的文件列表。target_link_libraries 通常会自动推断这些依赖。对于链接脚本，可以使用自定义的 CMake 函数 target_linker_scripts。
- COMPONENT_SUBMODULES：不再使用。CMake 会自动枚举 ESP-IDF 仓库中所有的子模块。
- COMPONENT_EXTRA_INCLUDES：曾是 COMPONENT_PRIV_INCLUDEDIRS 变量的替代版本，仅支持绝对路径。CMake 系统中统一使用 COMPONENT_PRIV_INCLUDEDIRS（可以是相对路径，也可以是绝对路径）。
- COMPONENT_OBJS：以前，可以以目标文件列表的方式指定组件源，现在，可以通过 COMPONENT_SRCS 以源文件列表的形式指定组件源。
- COMPONENT_OBJEXCLUDE：已被 COMPONENT_SRCEXCLUDE 替换。用于指定源文件（绝对路径或组件目录的相对路径）。
- COMPONENT_EXTRA_CLEAN：已被 ADDITIONAL_MAKE_CLEAN_FILES 属性取代，注意，*CMake 对此项功能有部分限制*。
- COMPONENT_OWNBUILDTARGET & COMPONENT_OWNCLEANTARGET：已被 CMake 外部项目 替代，详细内容请参阅*完全覆盖组件的构建过程*。
- COMPONENT_CONFIG_ONLY：已被 register_config_only_component() 函数替代，请参阅*仅配置组件*。
- CFLAGS、CPPFLAGS、CXXFLAGS：已被相应的 CMake 命令替代，请参阅*组件编译控制*。

无默认值的变量

以下变量不再具有默认值：

- 源目录（Make 中的 COMPONENT_SRCDIRS 变量，CMake 中 idf_component_register 的 SRC_DIRS 参数）
- include 目录（Make 中的 COMPONENT_ADD_INCLUDEDIRS 变量，CMake 中 idf_component_register 的 INCLUDE_DIRS 参数）

不再需要的变量

在 CMake 构建系统中，如果设置了 COMPONENT_SRCS，就不需要再设置 COMPONENT_SRCDIRS。实际上，CMake 构建系统中如果设置了 COMPONENT_SRCDIRS，那么 COMPONENT_SRCS 就会被忽略。

从 Make 中烧录

仍然可以使用 make flash 或者类似的目标来构建和烧录，但是项目 sdkconfig 不能再用来指定串口和波特率。可以使用环境变量来覆盖串口和波特率的设置，详情请参阅使用 *Ninja/Make* 来烧录。

4.6 构建系统 (传统 GNU Make)

注解： ESP-IDF V4.0 及之后版本的默认构建系统为 CMake。本文档主要针对之前基于 GNU Make 的传统构建系统。请注意，未来，我们可能不会继续支持基于 GNU Make 的构建系统。

本文将介绍乐鑫物联网开发框架中的 构建系统和 组件的相关概念。

如果您想了解如何构建一个新的 ESP-IDF 项目，请阅读本文档。

我们建议您使用 ESP-IDF 模板工程 来开始您的新项目。

4.6.1 使用构建系统

ESP-IDF 的 README.md 文件对如何使用构建系统来构建项目作了简要的说明。

4.6.2 概述

一个 ESP-IDF 项目可以看作是许多不同组件的集合，例如对于一个展示当前湿度的网站服务器来说，它可能会包含如下一些组件：

- ESP32 基础库（libc，rom bindings 等）
- WiFi 驱动库
- TCP/IP 协议栈
- FreeRTOS 操作系统
- 网站服务器
- 湿度传感器的驱动
- 将上述组件组织在一起的主代码

ESP-IDF 可以显式地指定和配置每个组件。在构建项目的时候，构建系统会查找 ESP-IDF 目录、项目目录和用户自定义目录（可选）中所有的组件，然后使用基于文本的菜单系统让用户配置 ESP-IDF 项目中需要的每个组件。在配置结束后，构建系统开始编译整个项目。

概念

- 项目特指一个目录，其中包含了构建可执行文件的所有源文件和配置，还有其他的支持型输出文件，比如分区表、数据/文件系统分区和引导程序。
- 项目配置保存在项目根目录下名为 sdkconfig 的文件中，它可以通过 `make menuconfig` 进行修改，且一个项目只能包含一个项目配置。
- 应用程序是由 ESP-IDF 构建得到的可执行文件。一个项目通常会构建两个应用程序：项目应用程序（主可执行文件，即用户自定义的固件）和引导程序（启动并初始化项目应用程序的引导程序）。
- 组件是模块化的、独立的代码，它们被编译成静态库（.a 文件）后再链接成应用程序，有些组件是 ESP-IDF 官方提供的，有些则可能来自其它项目。

以下内容并不是项目的组成部分：

- `ESP-IDF` 并不是项目的一部分，相反，它是独立的，并通过 IDF_PATH 环境变量链接到项目中，这样做就可以使 IDF 框架与您的项目分离，其中 IDF_PATH 变量保存了 ESP-IDF 目录的路径。
- 交叉编译工具链并不是项目的组成部分，它应该被安装在系统 PATH 环境变量中，或者可以在项目配置中显式指定工具链的前缀为本地的安装路径。

示例项目

示例项目的目录树结构可能如下所示:

```
- myProject/
             - Makefile
             - sdkconfig
             - components/ - component1/ - component.mk
                                         - Kconfig
                                         - src1.c
                           - component2/ - component.mk
                                         - Kconfig
                                         - src1.c
                                         - include/ - component2.h
             - main/       - src1.c
                           - src2.c
                           - component.mk

             - build/
```

该示例项目 `myProject` 包含以下组成部分：

- 项目顶层 Makefile，该 Makefile 设置了 `PROJECT_NAME` 变量，还可以定义作用于整个项目的其它 make 变量（可选）。顶层 Makefile 会导入核心 Makefile 文件 `$(IDF_PATH)/make/project.mk`，由它负责实现 ESP-IDF 构建系统的剩余部分。
- 项目配置文件 sdkconfig，执行 `make menuconfig` 后会创建或更新此文件，该文件中保存了项目中所有组件的配置信息（包括 ESP-IDF 本身）。`sdkconfig` 文件可能会也可能不会被添加到项目的源代码管理系统中。
- 可选的组件目录中包含了属于项目一部分的自定义组件，不是每一个项目都需要它，但它有助于构建可重用代码或者导入第三方组件。
- `main` 目录是一个特殊的 *伪组件*，它包含项目本身的源代码。`main` 是默认名称，Makefile 变量 `COMPONENT_DIRS` 默认会导入此组件，但您也可以修改此变量（或者设置 `EXTRA_COMPONENT_DIRS`）以查找其他位置的组件。
- `build` 目录在项目构建的时候创建或者更新，里面包含有构建生成的临时目标文件和库以及最终输出的二进制文件。此目录通常不会被添加到项目的源代码管理系统中，也不会随着项目源代码被发布。

组件目录中会包含组件自己的 Makefile 文件 `component.mk`，里面会定义一些变量来控制该组件的构建过程，以及它与整个项目的集成。更多详细信息请参考*组件 Makefiles*。

每个组件还可以包含一个 `Kconfig` 文件，它用于定义 `menuconfig` 时展示的组件配置信息的选项规则。某些组件还可能还会包含 `Kconfig.projbuild` 和 `Makefile.projbuild` 特殊文件，他们可以用来覆盖项目的部分配置。

项目 Makefiles

每个项目都有一个 Makefile，它包含整个项目的构建设置。默认情况下，项目 Makefile 可以非常小。

最小 Makefile 示例

```
PROJECT_NAME := myProject

include $(IDF_PATH)/make/project.mk
```

必须设置的项目变量

- PROJECT_NAME: 项目名称，最终输出的二进制文件也使用该名称，即 myProject.bin，myProject.elf 。

可选的项目变量 以下这些变量都有默认值，用户可以重写这些变量以自定义构建行为。查看 make/project.mk 文件可以获得所有的实现细节。

- PROJECT_PATH：顶层项目目录，默认是包含 Makefile 文件的目录，许多其他的项目变量都基于此变量。注意，项目路径中不能包含有空格。
- BUILD_DIR_BASE：所有对象、库、二进制文件的输出目录，默认为 $(PROJECT_PATH)/build。
- COMPONENT_DIRS：组件的搜索目录，默认为 $(IDF_PATH)/components，$(PROJECT_PATH)/components，$(PROJECT_PATH)/main 和 EXTRA_COMPONENT_DIRS 。如果您不希望从这些目录中搜索组件，请重写此变量。
- EXTRA_COMPONENT_DIRS：组件额外的搜索路径，可选。
- COMPONENTS：要构建进项目中的组件列表，默认为 COMPONENT_DIRS 指定目录中所有的组件。
- EXCLUDE_COMPONENTS：在构建的过程中需要剔除的组件列表，可选。请注意这只会减少构建的时间，并不会减少最终二进制文件的大小。
- TEST_EXCLUDE_COMPONENTS：在构建单元测试的过程中需要剔除的组件列表，可选。

以上这些 Makefile 变量中的任何路径都要使用绝对路径，您可以使用 $(PROJECT_PATH)/xxx，$(IDF_PATH)/xxx，或者使用 Make 内置函数 $(abspath xxx) 将相对路径转换为绝对路径。

以上这些变量要在 Makefile 中 include $(IDF_PATH)/make/project.mk 的前面进行设置。

组件 Makefiles

每个项目都包含一个或者多个组件，这些组件可以是 ESP-IDF 的一部分，也可以从其他组件目录添加。

组件是包含 component.mk 文件的任何目录。

搜索组件

搜索 COMPONENT_DIRS 中指定的目录以查找项目会使用的组件，目录可以是组件本身（即他们包含 component.mk 文件），也可以是包含组件的上层目录。

运行 make list-components 命令可以查询这些变量的值，这有助于调试组件的搜索路径是否正确。

同名组件 ESP-IDF 搜索组件时，会按照 COMPONENT_DIRS 指定的顺序依次进行，这意味着在默认情况下，首先是 ESP-IDF 组件，然后是项目组件，最后是 EXTRA_COMPONENT_DIRS 中的组件。如果这些目录中的两个或者多个包含具有相同名字的组件，则使用搜索到的最后一个位置的组件。这就允许将组件复制到项目目录中再修改来覆盖 ESP-IDF 组件，如果使用这种方式，ESP-IDF 目录本身可以保持不变。

最小组件 Makefile 最简单的 component.mk 文件可以是一个空文件，如果文件为空，则组件的默认构建行为会被设置为：

- makefile 所在目录中的所有源文件（*.c，*.cpp，*.cc，*.S）将会被编译进组件库中。
- 子目录 include 将被添加到其他组件的全局头文件搜索路径中。
- 组件库将会被链接到项目的应用程序中。

更完整的组件 makefile 可以查看组件 *Makefile 示例*。

请注意，空的 component.mk 文件同没有 component.mk 文件之间存在本质差异，前者会调用默认的组件构建行为，后者不会发生默认的组件构建行为。一个组件中如果只包含影响项目配置或构建过程的文件，那么它可以没有 component.mk 文件。

预设的组件变量 以下特定于组件的变量可以在 component.mk 中使用，但不应该被修改。

- COMPONENT_PATH：组件的目录，即包含 component.mk 文件的绝对路径，路径中不能包含空格。
- COMPONENT_NAME：组件的名字，默认为组件目录的名称。
- COMPONENT_BUILD_DIR：组件的构建目录，即存放组件构建输出的绝对路径，它是 *$(BUILD_DIR_BASE)* 的子目录。该变量也是构建组件时的当前工作目录，所以 make 中的相对路径都以此目录为基础。
- COMPONENT_LIBRARY：组件构建后的静态库文件（相对于组件的构建目录）的名字，默认为 $(COMPONENT_NAME).a。

以下变量在项目顶层中设置，并被导出到组件中构建时使用：

- PROJECT_NAME：项目名称，在项目的 Makefile 中设置。
- PROJECT_PATH：包含项目 Makefile 的目录的绝对路径。
- COMPONENTS：此次构建中包含的所有组件的名字。
- CONFIG_*：项目配置中的每个值在 make 中都对应一个以 CONFIG_ 开头的变量。
- CC，LD，AR，OBJCOPY：gcc xtensa 交叉编译工具链中每个工具的完整路径。
- HOSTCC，HOSTLD，HOSTAR：主机本地工具链中每个工具的全名。
- IDF_VER：ESP-IDF 的版本号，可以通过检索 $(IDF_PATH)/version.txt 文件（假如存在的话）或者使用 git 命令 git describe 来获取。这里推荐的格式是在一行中指定主 IDF 的发布版本号，例如标记为 v2.0 的发布版本或者是标记任意一次提交记录的 v2.0-275-g0efaa4f。应用程序可以通过调用 *esp_get_idf_version()* 函数来使用该变量。
- IDF_VERSION_MAJOR, IDF_VERSION_MINOR, IDF_VERSION_PATCH: ESP-IDF 的组件版本，可用于条件表达式。请注意这些信息的精确度不如 IDF_VER 变量，版本号 v4.0-dev-*，v4.0-beta1，v4.0-rc1 和 v4.0 对应的 IDF_VERSION_* 变量值是相同的，但是 IDF_VER 的值是不同的。
- PROJECT_VER：项目版本。
  - 如果设置了 *CONFIG_APP_PROJECT_VER_FROM_CONFIG* 选项，则将使用 *CONFIG_APP_PROJECT_VER* 的值作为项目版本。
  - 如果在项目 Makefile 文件中设置了 PROJECT_VER 变量，则使用该值作为项目版本。
  - 如果存在 $PROJECT_PATH/version.txt，则用其内容为 PROJECT_VER。
  - 如果项目位于 Git 仓库中，将使用 git 描述部分的内容作为项目版本。
  - 如果以上均不存在，则 PROJECT_VER 为 “1”。

如果您在 component.mk 文件中修改这些变量，这并不会影响其它组件的构建，但可能会使您的组件变得难以构建或调试。

可选的项目通用组件变量 可以在 component.mk 中设置以下变量来控制整个项目的构建行为：

- COMPONENT_ADD_INCLUDEDIRS：相对于组件目录的路径，将被添加到项目中所有组件的头文件搜索路径中。如果该变量未被覆盖，则默认为 include 目录。如果一个头文件路径仅仅为当前组件所用，那么应该将该路径添加到 COMPONENT_PRIV_INCLUDEDIRS 中。
- COMPONENT_ADD_LDFLAGS：添加链接参数到全局 LDFLAGS 中用以指导链接最终的可执行文件，默认为 -l$(COMPONENT_NAME)。如果将预编译好的库添加到此目录，请使用它们为绝对路径，即 $(COMPONENT_PATH)/libwhatever.a。
- COMPONENT_DEPENDS：需要在当前组件之前构建的组件列表，这对于处理链接时的依赖不是必需的，因为所有组件的头文件目录始终可用。如果一个组件会生成一个头文件，然后另外一个组件需要使用它，此时该变量就有必要进行设置。大多数的组件不需要设置此变量。

- COMPONENT_ADD_LINKER_DEPS：保存一些文件的路径，当这些文件发生改变时，会触发 ELF 文件重新链接。该变量通常用于链接脚本文件和二进制文件，大多数的组件不需要设置此变量。

以下变量仅适用于属于 ESP-IDF 的组件：

- COMPONENT_SUBMODULES：组件使用的 git 子模块的路径列表（相对于 COMPONENT_PATH）。这些路径会在构建的过程中被检查（并在必要的时候初始化）。如果组件位于 IDF_PATH 目录之外，则忽略此变量。

可选的组件特定变量 以下变量可以在 component.mk 中进行设置，用以控制该组件的构建行为：

- COMPONENT_PRIV_INCLUDEDIRS：相对于组件目录的目录路径，该目录仅会被添加到该组件源文件的头文件搜索路径中。
- COMPONENT_EXTRA_INCLUDES：编译组件的源文件时需要指定的额外的头文件搜索路径，这些路径将以 -I 为前缀传递给编译器。这和 COMPONENT_PRIV_INCLUDEDIRS 变量的功能有些类似，但是这些路径不会相对于组件目录进行扩展。
- COMPONENT_SRCDIRS：相对于组件目录的目录路径，这些路径用于搜索源文件（*.cpp，*.c，*.S），默认为 .，即组件目录本身。重写该变量可以指定包含源文件的不同目录列表。
- COMPONENT_OBJS：要编译生成的目标文件，默认是 COMPONENT_SRCDIRS 中每个源文件的.o 文件。重写该变量将允许您剔除 COMPONENT_SRCDIRS 中的某些源文件，否则他们将会被编译。相关示例请参阅*指定需要编译的组件源文件*。
- COMPONENT_EXTRA_CLEAN：相对于组件构建目录的路径，指向 component.mk 文件中自定义 make 规则生成的任何文件，它们也是 make clean 命令需要删除的文件。相关示例请参阅*源代码生成*。
- COMPONENT_OWNBUILDTARGET & COMPONENT_OWNCLEANTARGET：这些目标允许您完全覆盖组件的默认编译行为。有关详细信息，请参阅*完全覆盖组件的 Makefile*。
- COMPONENT_CONFIG_ONLY：如果设置了此标志，则表示组件根本不会产生构建输出（即不会构建得到 COMPONENT_LIBRARY），并且会忽略大多数其它组件变量。此标志用于 IDF 内部组件，其中仅包含 KConfig.projbuild 和/或 Makefile.projbuild 文件来配置项目，但是没有源文件。
- CFLAGS：传递给 C 编译器的标志。根据项目设置已经定义一组默认的 CFLAGS，可以通过 CFLAGS += 来为组件添加特定的标志，也可以完全重写该变量（尽管不推荐这么做）。
- CPPFLAGS：传递给 C 预处理器的标志（用于 .c，.cpp 和 .S 文件）。根据项目设置已经定义一组默认的 CPPFLAGS，可以通过 CPPFLAGS += 来为组件添加特定的标志，也可以完全重写该变量（尽管不推荐这么做）。
- CXXFLAGS：传递给 C++ 编译器的标志。根据项目设置已经定义一组默认的 CXXFLAGS，可以通过 CXXFLAGS += 来为组件添加特定的标志，也可以完全重写该变量（尽管不推荐这么做）。
- COMPONENT_ADD_LDFRAGMENTS：链接器脚本生成功能的链接器片段文件的路径，请查看*链接器脚本生成*.

如果要将编译标志应用于单个源文件，您可以将该源文件的目标规则覆盖，例如：

```
apps/dhcpserver.o: CFLAGS += -Wno-unused-variable
```

如果上游代码在编译的时候发出了警告，那这么做可能会很有效。

配置组件

每个组件都可以包含一个 Kconfig 文件，和 component.mk 放在同一个目录下。Kconfig 中包含此组件在 make menuconfig 时要展示的配置规则的设置。

运行 menuconfig 时，可以在 Component Settings 菜单栏下找到这些设置。

创建一个组件的 Kconfig 文件，最简单的方法就是使用 ESP-IDF 中现有的 Kconfig 文件作为模板，在这基础上进行修改。

有关示例请参阅*添加条件配置*。

预处理器定义

ESP-IDF 构建系统会在命令行中添加以下 C 预处理定义：

- ESP_PLATFORM —可以用来检测在 ESP-IDF 内发生的构建行为。
- IDF_VER —ESP-IDF 的版本，请参阅预设的组件变量。

构建的内部过程

顶层：项目 Makefile

- make 始终从项目目录处运行，并且项目的 makefile 名字通常为 Makefile 。
- 项目的 makefile 文件会设置 PROJECT_NAME ，并且可以自定义其他可选的项目变量。
- 项目 makefile 文件会导入 $(IDF_PATH)/make/project.mk ，该文件中会导入项目级的 Make 逻辑。
- project.mk 填写默认的项目级 make 变量，并导入项目配置中的 make 变量。如果生成的包含项目配置的 makefile 文件已经过期，那么它将会被重新生成（通过 project_config.mk 中的目标规则），然后 make 进程从顶层重新开始。
- project.mk 根据默认组件目录或者可选项目变量中设置的自定义组件列表来编译组件。
- 每个组件都可以设置一些可选的项目通用组件变量 ，他们会通过 component_project_vars.mk 被导入 project.mk 文件中。如果这些文件有缺失或者过期，他们会被重新生成（通过对组件 makefile 的递归调用），然后 make 进程从顶层重新开始。
- 组件中的 Makefile.projbuild 文件被包含在了 make 的进程中，以添加额外的目标或者配置。
- 默认情况下，项目 makefile 还为每个组件生成顶层的编译和清理目标，并设置 app 和 clean 目标来调用所有这些子目标。
- 为了编译每个组件，对组件 makefile 执行递归构建。

为了更好地理解项目的构建过程，请通读 project.mk 文件。

第二层：组件 Makefile 文件

- 每次调用组件 makefile 文件都是通过 $(IDF_PATH)/make/component_wrapper.mk 这个包装器进行的。
- 此组件包装器包含了所有组件的 Makefile.componentbuild 文件，使这些文件中的任何配置，变量都可用于每个组件。
- 调用 component_wrapper.mk 时将当前目录设置为组件构建目录，并将 COMPONENT_MAKEFILE 变量设置为 component.mk 的绝对路径。
- component_wrapper.mk 为所有组件变量设置默认值，然后导入 component.mk 文件来覆盖或修改这些变量。
- 如果未定义 COMPONENT_OWNBUILDTARGET 和 COMPONENT_OWNCLEANTARGET 文件，则会为组件的源文件和必备组件 COMPONENT_LIBRARY 静态库文件创建默认构建和清理目标。
- component_project_vars.mk 文件在 component_wrapper.mk 中有自己的目标，如果由于组件的 makefile 或者项目配置的更改而需要重建此文件，则从 project.mk 文件中进行评估。

为了更好地理解组件制作过程，请阅读 component_wrapper.mk 文件和 ESP-IDF 中的 component.mk 文件。

以非交互的方式运行 Make

如果在运行 make 的时候不希望出现交互式提示（例如：在 IDE 或自动构建系统中），可以将 BATCH_BUILD=1 添加到 make 的参数中（或者将其设置为环境变量）。

设置 BATCH_BUILD 意味着：

- 详细输出（与 V=1 相同，见下文），如果不需要详细输出，就设置 V=0 。
- 如果项目配置缺少新配置项（来自新组件或者 ESP-IDF 更新），则项目使用默认值，而不是提示用户输入每个项目。
- 如果构建系统需要调用 menuconfig ，则会打印错误并且构建失败。

构建目标的进阶用法

- `make app`, `make bootloader`, `make partition table` 可以根据需要为项目单独构建生成应用程序文件、启动引导文件和分区表文件。
- `make erase_flash` 和 `make erase_otadata` 会调用 esptool.py 脚本分别擦除整块闪存芯片或者其中 OTA 分区的内容。
- `make size` 会打印应用程序的大小信息。`make size-components` 和 `make size-files` 两者功能相似，分别打印每个组件或者每个源文件大小的详细信息。

调试 Make 的过程

调试 ESP-IDF 构建系统的一些技巧：

- 将 `V=1` 添加到 make 的参数中（或将其设置为环境变量）将使 make 回显所有已经执行的命令，以及为子 make 输入的每个目录。
- 运行 `make -w` 将导致 make 在为子 make 输入时回显每个目录——与 `V=1` 相同但不回显所有命令。
- 运行 `make --trace`（可能除了上述参数之一）将打印出构建时的每个目标，以及导致它构建的依赖项）。
- 运行 `make -p` 会打印每个 makefile 中每个生成的目标的（非常详细的）摘要。

更多调试技巧和通用的构建信息，请参阅 GNU 构建手册。

警告未定义的变量 默认情况下，如果引用了未定义的变量（如 `$(DOES_NOT_EXIST)`），构建过程将会打印警告，这对于查找变量名称中的错误非常有用。

如果不想要此行为，可以在 menuconfig 顶层菜单下的 *SDK tool configuration* 中禁用它。

请注意，如果在 Makefile 中使用 `ifdef` 或者 `ifndef`，则此选项不会出发警告。

覆盖项目的部分内容

Makefile.projbuild 如果一个组件含有必须要在项目构建过程的顶层进行计算的变量，则可以在组件目录下创建名为 `Makefile.projbuild` 的文件，项目在执行 `project.mk` 的时候会导入此 makefile 。

例如，如果您的组件需要为整个项目添加 CFLAGS（不仅仅是为自身的源文件），那么可以在 `Makefile.projbuild` 中设置 `CFLAGS +=` 。

`Makefile.projbuild` 文件在 ESP-IDF 中大量使用，用于定义项目范围的构建功能，例如 `esptool.py` 命令行参数和 `bootloader` 这个特殊的程序。

请注意，`Makefile.projbuild` 对于最常见的组件不是必需的 - 例如向项目中添加 include 目录，或者将 LDFLAGS 添加到最终链接步骤，同样可以通过 `component.mk` 文件来自定义这些值。有关详细信息，请参阅可选的项目通用组件变量 。

在此文件中设置变量或者目标时要小心，由于这些值包含在项目的顶层 makefile 中，因此他们可以影响或者破坏所有组件的功能！

KConfig.projbuild 这相当于 `Makefile.projbuild` 的组件配置 KConfig 文件，如果要在 menuconfig 的顶层添加配置选项，而不是在组件配置子菜单中，则可以在 `component.mk` 文件所在目录中的 KConfig.projbuild 文件中定义这些选项。

在此文件中添加配置时要小心，因为他们将包含在整个项目配置中，在可能的情况下，通常最好为组件创建和配置 KConfig 文件。

Makefile.componentbuild 对于一些特殊的组件，比如它们会使用工具从其余文件中生成源文件，这时就有必要将配置、宏或者变量的定义添加到每个组件的构建过程中。这是通过在组件目录中包含 `Makefile.componentbuild` 文件来实现的。此文件在 `component.mk` 文件之前被导入 `component_wrapper.mk` 中。同 `Makefile.projbuild` 文件一样，请留意这些文件，因为他们包含在每个组件的构建中，所有只有在编译完全不同的组件时才会出现 `Makefile.componentbuild` 错误。

仅配置的组件 仅配置的组件是一类不包含源文件的特殊组件，只有 Kconfig.projbuild 和 Makefile.projbuild 文件，可以在 conponent.mk 文件中设置标志 COMPONENT_CONFIG_ONLY。如果设置了此标志，则忽略大多数其他组件变量，并且不会为组件执行构建操作。

组件 Makefile 示例

因为构建环境试图设置大多数情况都能工作的合理默认值，所以 component.mk 可能非常小，甚至是空的，请参考最小组件 *Makefile*。但是某些功能通常需要覆盖组件的变量。

以下是 component.mk 的一些更高级的示例：

增加源文件目录 默认情况下，将忽略子目录。如果您的项目在子目录中而不是在组件的根目录中有源文件，那么您可以通过设置 COMPONENT_SRCDIRS 将其告知构建系统：

```
COMPONENT_SRCDIRS := src1 src2
```

构建系统将会编译 src1/ 和 src2/ 子目录中的所有源文件。

指定源文件 标准 component.mk 逻辑将源目录中的所有.S 和.c 文件添加为无条件编译的源。通过将 COMPONENT_OBJS 变量手动设置为需要生成的对象的名称，可以绕过该逻辑并对要编译的对象进行硬编码：

```
COMPONENT_OBJS := file1.o file2.o thing/filea.o thing/fileb.o anotherthing/main.o
COMPONENT_SRCDIRS := . thing anotherthing
```

请注意，还需要另外设置 COMPONENT_SRCDIRS 。

添加条件配置 配置系统可用于有条件地编译某些文件，具体取决于 make menuconfig 中选择的选项。为此，ESP-IDF 具有 compile_only_if 和 compile_only_if_not 的宏：

Kconfig:

```
config FOO_ENABLE_BAR
    bool "Enable the BAR feature."
    help
        This enables the BAR feature of the FOO component.
```

component.mk:

```
$(call compile_only_if,$(CONFIG_FOO_ENABLE_BAR),bar.o)
```

从示例中可以看出，compile_only_if 宏将条件和目标文件列表作为参数。如果条件为真（在这种情况下：如果在 menuconfig 中启用了 BAR 功能），将始终编译目标文件（在本例中为 bar.o）。相反的情况也是如此，如果条件不成立，bar.o 将永远不会被编译。compile_only_if_not 执行相反的操作，如果条件为 false 则编译，如果条件为 true 则不编译。

这也可以用于选择或者删除实现，如下所示：

Kconfig:

```
config ENABLE_LCD_OUTPUT
    bool "Enable LCD output."
    help
        Select this if your board has a LCD.

config ENABLE_LCD_CONSOLE
    bool "Output console text to LCD"
    depends on ENABLE_LCD_OUTPUT
    help
```

(下页继续)

(续上页)

```
        Select this to output debugging output to the lcd

config ENABLE_LCD_PLOT
    bool "Output temperature plots to LCD"
    depends on ENABLE_LCD_OUTPUT
    help
        Select this to output temperature plots
```

component.mk:

```
# If LCD is enabled, compile interface to it, otherwise compile dummy interface
$(call compile_only_if,$(CONFIG_ENABLE_LCD_OUTPUT),lcd-real.o lcd-spi.o)
$(call compile_only_if_not,$(CONFIG_ENABLE_LCD_OUTPUT),lcd-dummy.o)

#We need font if either console or plot is enabled
$(call compile_only_if,$(or $(CONFIG_ENABLE_LCD_CONSOLE),$(CONFIG_ENABLE_LCD_
↪PLOT)), font.o)
```

请注意使用 Make 或者函数来包含字体文件。其他的替换函数，比如 and 和 if 也适用于此处。也可以使用不在 menuconfig 中定义的变量，ESP-IDF 使用默认的 Make 策略，判断一个空的或只包含空格的变量视为 false，而其中任何非空格的变量都为 true 。

(注意：本文档的历史版本建议将目标文件添加到 COMPONENT_OBJS 中，虽然这仍然可行，但是只有当组件中的所有目标文件都明确命名时才会起作用，并且在 make clean 后并不会清除 make 中取消选择的目标文件)。

源代码生成 某些组件会出现源文件未随组件本身提供，而必须从另外一个文件生成的情况。假设我们的组件有一个头文件，该文件由 BMP 文件转换后的二进制数据组成，假设使用 bmp2h 的工具进行转换，然后将头文件包含在名为 graphics_lib.c 的文件中:

```
COMPONENT_EXTRA_CLEAN := logo.h

graphics_lib.o: logo.h

logo.h: $(COMPONENT_PATH)/logo.bmp
    bmp2h -i $^ -o $@
```

这个示例会在当前目录（构建目录）中生成 graphics_lib.o 和 logo.h 文件，而 logo.bmp 随组件一起提供并位于组件路径下。因为 logo.h 是一个生成的文件，所以当调用 make clean 时需要清理它，这就是为什么要将它添加到 COMPONENT_EXTRA_CLEAN 变量中。

润色与改进 将 logo.h 添加作为 graphics_lib.o 的依赖项会导致在编译 graphics_lib.c 之前先生成它。

如果另一个组件中的源文件需要使用 logo.h，则必须将此组件的名称添加到另一个组件的 COMPONENT_DEPENDS 列表中，以确保组件按顺序编译。

嵌入二进制数据 有时您的组件希望使用一个二进制文件或者文本文件，但是您又不希望将它重新格式化为 C 源文件。

这时，您可以在 component.mk 文件中设置变量 COMPONENT_EMBED_FILES，以这种方式指定要嵌入的文件的名称:

```
COMPONENT_EMBED_FILES := server_root_cert.der
```

或者，如果文件是字符串，则可以使用变量 COMPONENT_EMBED_TXTFILES，这将把文本文件的内容当成以 null 结尾的字符串嵌入:

```
COMPONENT_EMBED_TXTFILES := server_root_cert.pem
```

文件的内容会被编译进 flash 中的.rodata 段，并通过符号名称来访问，如下所示:

```
extern const uint8_t server_root_cert_pem_start[] asm("_binary_server_root_cert_
↪pem_start");
extern const uint8_t server_root_cert_pem_end[]   asm("_binary_server_root_cert_
↪pem_end");
```

符号名称是根据文件的全名生成的，如 COMPONENT_EMBED_FILES 中的所示，字符 / ，. ，等都将会被下划线替代。符号名称中的 _binary 前缀由 objcopy 添加，对于文本和二进制文件都是相同的。

有关使用此技术的示例，请查看 file_serving 示例 protocols/http_server/file_serving/main/CMakeLists.txt 中的 main 组件，两个文件会在编译时加载并链接到固件中。

4.6.3 代码和数据的存放

ESP-IDF 还支持自动生成链接脚本，它允许组件通过链接片段文件定义其代码和数据在内存中的存放位置。构建系统会处理这些链接片段文件，并将处理后的结果扩充进链接脚本，从而指导应用程序二进制文件的链接过程。更多详细信息与快速上手指南，请参阅链接脚本生成机制。

完全覆盖组件的 Makefile

显然，在某些情况下，所有这些配置都不足以满足某个组件，例如，当组件基本上是另一个第三方组件的包装器时，该第三方组件最初不打算在 ESP-IDF 构建系统下工作，在这种情况下，可以通过设置 COMPONENT_OWNBUILDTARGET 和可能的 COMPONENT_OWNCLEANTARGET，并在 component.mk 中定义名为 build 和 clean 的目标。构建目标可以执行任何操作，只要它为项目生成了 $(COMPONENT_LIBRARY)，并最终被链接到应用程序二进制文件中即可。

(实际上，这并不是必须的 - 如果 COMPONENT_ADD_LDFLAGS 变量被覆盖，那么组件可以指示链接器链接其他二进制文件。)

注解: 当外部构建系统使用 PSRAM 时，请记得将 -mfix-esp32-psram-cache-issue 添加到 C 编译器的参数中。关于该标志的更多详细信息，请参考*CONFIG_SPIRAM_CACHE_WORKAROUND*。

自定义 sdkconfig 的默认值

对于示例工程或者其他您不想指定完整 sdkconfig 配置的项目，但是您确实希望覆盖 ESP-IDF 默认值中的某些键值，则可以在项目中创建文件 sdkconfig.defaults，运行 make defconfig 或从头创建新配置时将会使用此文件。

要想覆盖此文件的名称，请设置 SDKCONFIG_DEFAULTS 环境变量。

保存 flash 参数

在某些情况下，我们希望在没有 IDF 的情况下烧写目标板，对于这种情况，我们希望保存构建的二进制文件、esptool.py 和 esptool write_flash 命令的参数。可以简单编写一段脚本来保存二进制文件和 esptool.py，并且使用命令 make print_flash_cmd 来查看烧写 flash 时的参数:

```
--flash_mode dio --flash_freq 40m --flash_size detect 0x1000 bootloader/bootloader.
↪bin 0x10000 example_app.bin 0x8000 partition_table_unit_test_app.bin
```

然后使用这段 flash 参数作为 esptool write_flash 命令的参数:

```
python esptool.py --chip esp32 --port /dev/ttyUSB0 --baud 921600 --before default_
↪reset --after hard_reset write_flash -z --flash_mode dio --flash_freq 40m --
↪flash_size detect 0x1000 bootloader/bootloader.bin 0x10000 example_app.bin␣
↪0x8000 partition_table_unit_test_app.bin
```

4.6.4 构建 Bootloader

引导程序默认作为 `make all` 的一部分被构建，或者也可以通过 `make bootloader-clean` 来单独构建，此外还可以通过 `make bootloader-list-components` 来查看构建引导程序时包含的组件。

引导程序是一个特殊的组件，因为主项目中的二级引导程序拥有单独的.EFL 和.BIN 文件。但是它与主项目共享配置和构建目录。

这是通过在 components/bootloader/subproject 下添加子项目来完成的。这个子项目有自己的 Makefile，但它希望通过 components/bootloader/Makefile.projectbuild 文件中的一些配置使自己从主项目的 Makefile 被调用。有关详细信息，请参阅这些文件。

4.7 Deep Sleep Wake Stubs

ESP32 supports running a "deep sleep wake stub" when coming out of deep sleep. This function runs immediately as soon as the chip wakes up - before any normal initialisation, bootloader, or ESP-IDF code has run. After the wake stub runs, the SoC can go back to sleep or continue to start ESP-IDF normally.

Deep sleep wake stub code is loaded into "RTC Fast Memory" and any data which it uses must also be loaded into RTC memory. RTC memory regions hold their contents during deep sleep.

4.7.1 Rules for Wake Stubs

Wake stub code must be carefully written:

- As the SoC has freshly woken from sleep, most of the peripherals are in reset states. The SPI flash is unmapped.
- The wake stub code can only call functions implemented in ROM or loaded into RTC Fast Memory (see below.)
- The wake stub code can only access data loaded in RTC memory. All other RAM will be unintiailised and have random contents. The wake stub can use other RAM for temporary storage, but the contents will be overwritten when the SoC goes back to sleep or starts ESP-IDF.
- RTC memory must include any read-only data (.rodata) used by the stub.
- Data in RTC memory is initialised whenever the SoC restarts, except when waking from deep sleep. When waking from deep sleep, the values which were present before going to sleep are kept.
- Wake stub code is a part of the main esp-idf app. During normal running of esp-idf, functions can call the wake stub functions or access RTC memory. It is as if these were regular parts of the app.

4.7.2 Implementing A Stub

The wake stub in esp-idf is called `esp_wake_deep_sleep()`. This function runs whenever the SoC wakes from deep sleep. There is a default version of this function provided in esp-idf, but the default function is weak-linked so if your app contains a function named `esp_wake_deep_sleep()` then this will override the default.

If supplying a custom wake stub, the first thing it does should be to call `esp_default_wake_deep_sleep()`.

It is not necessary to implement `esp_wake_deep_sleep()` in your app in order to use deep sleep. It is only necessary if you want to have special behaviour immediately on wake.

If you want to swap between different deep sleep stubs at runtime, it is also possible to do this by calling the `esp_set_deep_sleep_wake_stub()` function. This is not necessary if you only use the default `esp_wake_deep_sleep()` function.

All of these functions are declared in the `esp_sleep.h` header under components/esp32.

4.7.3 Loading Code Into RTC Memory

Wake stub code must be resident in RTC Fast Memory. This can be done in one of two ways.

The first way is to use the `RTC_IRAM_ATTR` attribute to place a function into RTC memory:

```
void RTC_IRAM_ATTR esp_wake_deep_sleep(void) {
    esp_default_wake_deep_sleep();
    // Add additional functionality here
}
```

The second way is to place the function into any source file whose name starts with `rtc_wake_stub`. Files names `rtc_wake_stub*` have their contents automatically put into RTC memory by the linker.

The first way is simpler for very short and simple code, or for source files where you want to mix "normal" and "RTC" code. The second way is simpler when you want to write longer pieces of code for RTC memory.

4.7.4 Loading Data Into RTC Memory

Data used by stub code must be resident in RTC memory.

The data can be placed in RTC Fast memory or in RTC Slow memory which is also used by the ULP.

Specifying this data can be done in one of two ways:

The first way is to use the `RTC_DATA_ATTR` and `RTC_RODATA_ATTR` to specify any data (writeable or read-only, respectively) which should be loaded into RTC memory:

```
RTC_DATA_ATTR int wake_count;

void RTC_IRAM_ATTR esp_wake_deep_sleep(void) {
    esp_default_wake_deep_sleep();
    static RTC_RODATA_ATTR const char fmt_str[] = "Wake count %d\n";
    esp_rom_printf(fmt_str, wake_count++);
}
```

The RTC memory area where this data will be placed can be configured via menuconfig option named `CONFIG_ESP32_RTCDATA_IN_FAST_MEM`. This option allows to keep slow memory area for ULP programs and once it is enabled the data marked with `RTC_DATA_ATTR` and `RTC_RODATA_ATTR` are placed in the RTC fast memory segment otherwise it goes to RTC slow memory (default option). This option depends on the `CONFIG_FREERTOS_UNICORE` because RTC fast memory can be accessed only by PRO_CPU.

The attributes `RTC_FAST_ATTR` and `RTC_SLOW_ATTR` can be used to specify data that will be force placed into RTC_FAST and RTC_SLOW memory respectively. Any access to data marked with `RTC_FAST_ATTR` is allowed by PRO_CPU only and it is responsibility of user to make sure about it.

Unfortunately, any string constants used in this way must be declared as arrays and marked with RTC_RODATA_ATTR, as shown in the example above.

The second way is to place the data into any source file whose name starts with `rtc_wake_stub`.

For example, the equivalent example in `rtc_wake_stub_counter.c`:

```
int wake_count;

void RTC_IRAM_ATTR esp_wake_deep_sleep(void) {
    esp_default_wake_deep_sleep();
    esp_rom_printf("Wake count %d\n", wake_count++);
}
```

The second way is a better option if you need to use strings, or write other more complex code.

To reduce wake-up time use the *CONFIG_BOOTLOADER_SKIP_VALIDATE_IN_DEEP_SLEEP* Kconfig option, see more information in *Fast boot from Deep Sleep*.

4.7.5 CRC Check For Wake Stubs

During deep sleep, all RTC Fast memory areas will be validated with CRC. When ESP32 wakes up from deep sleep, the RTC fast memory will be validated with CRC again. If the validation passes, the wake stubs code will be executed. Otherwise, the normal initialization, bootloader and esp-idf codes will be executed.

注解： When the *CONFIG_ESP_SYSTEM_ALLOW_RTC_FAST_MEM_AS_HEAP* option is enabled, all the RTC fast memory except the wake stubs area is added to the heap.

4.8 错误处理

4.8.1 概述

在应用程序开发中，及时发现并处理在运行时期的错误，对于保证应用程序的健壮性非常重要。常见的运行时错误有如下几种：

- 可恢复的错误：
  - 通过函数的返回值（错误码）表示的错误
  - 使用 `throw` 关键字抛出的 C++ 异常
- 不可恢复（严重）的错误：
  - 断言失败（使用 `assert` 宏或者其它类似方法）或者直接调用 `abort()` 函数造成的错误
  - CPU 异常：访问受保护的内存区域、非法指令等
  - 系统级检查：看门狗超时、缓存访问错误、堆栈溢出、堆栈粉碎、堆栈损坏等

本文将介绍 ESP-IDF 中针对可恢复错误的错误处理机制，并提供一些常见错误的处理模式。

关于如何处理不可恢复的错误，请查阅不可恢复错误。

4.8.2 错误码

ESP-IDF 中大多数函数会返回*esp_err_t* 类型的错误码，*esp_err_t* 实质上是带符号的整型，`ESP_OK` 代表成功（没有错误），具体值定义为 0。

在 ESP-IDF 中，许多头文件都会使用预处理器，定义可能出现的错误代码。这些错误代码通常均以 `ESP_ERR_` 前缀开头，一些常见错误（比如内存不足、超时、无效参数等）的错误代码则已经在 `esp_err.h` 文件中定义好了。此外，ESP-IDF 中的各种组件 (component) 也都可以针对具体情况，自行定义更多错误代码。

完整错误代码列表，请见错误代码参考 中查看完整的错误列表。

4.8.3 错误码到错误消息

错误代码并不直观，因此 ESP-IDF 还可以使用*esp_err_to_name()* 或者*esp_err_to_name_r()* 函数，将错误代码转换为具体的错误消息。例如，我们可以向*esp_err_to_name()* 函数传递错误代码 `0x101`，可以得到返回字符串 “ESP_ERR_NO_MEM”。这样一来，我们可以在日志中输出更加直观的错误消息，而不是简单的错误码，从而帮助研发人员更快理解发生了何种错误。

此外，如果出现找不到匹配的 `ESP_ERR_` 值的情况，函数*esp_err_to_name_r()* 则会尝试将错误码作为一种 标准 POSIX 错误代码 进行解释。具体过程为：POSIX 错误代码（例如 `ENOENT`，`ENOMEM`）定义在 `errno.h` 文件中，可以通过 `errno` 变量获得，进而调用 `strerror_r` 函数实现。在 ESP-IDF 中，`errno` 是一个基于线程的局部变量，即每个 FreeRTOS 任务都有自己的 `errno` 副本，通过函数修改 `errno` 也只会作用于当前任务中的 `errno` 变量值。

该功能（即在无法匹配 `ESP_ERR_` 值时，尝试用标准 POSIX 解释错误码）默认启用。用户也可以禁用该功能，从而减小应用程序的二进制文件大小，详情可见*CONFIG_ESP_ERR_TO_NAME_LOOKUP*。注意，该功能对禁用并不影响*esp_err_to_name()* 和*esp_err_to_name_r()* 函数的定义，用户仍可调用

这两个函数转化错误码。在这种情况下，*esp_err_to_name()* 函数在遇到无法匹配错误码的情况会返回 UNKNOWN ERROR，而*esp_err_to_name_r()* 函数会返回 Unknown error 0xXXXX(YYYYY)，其中 0xXXXX 和 YYYYY 分别代表错误代码的十六进制和十进制表示。

4.8.4 ESP_ERROR_CHECK 宏

宏 ESP_ERROR_CHECK() 的功能和 assert 类似，不同之处在于：这个宏会检查*esp_err_t* 的值，而非判断 bool 条件。如果传给 ESP_ERROR_CHECK() 的参数不等于*ESP_OK*，则会在控制台上打印错误消息，然后调用 abort() 函数。

错误消息通常如下所示：

```
ESP_ERROR_CHECK failed: esp_err_t 0x107 (ESP_ERR_TIMEOUT) at 0x400d1fdf

file: "/Users/user/esp/example/main/main.c" line 20
func: app_main
expression: sdmmc_card_init(host, &card)

Backtrace: 0x40086e7c:0x3ffb4ff0 0x40087328:0x3ffb5010 0x400d1fdf:0x3ffb5030␣
↪0x400d0816:0x3ffb5050
```

- 第一行打印错误代码的十六进制表示，及该错误在源代码中的标识符。这个标识符取决于*CONFIG_ESP_ERR_TO_NAME_LOOKUP* 选项的设定。最后，第一行还会打印程序中该错误发生的具体位置。
- 下面几行显示了程序中调用 ESP_ERROR_CHECK() 宏的具体位置，以及传递给该宏的参数。
- 最后一行打印回溯结果。对于所有不可恢复错误，这里在应急处理程序中打印的内容都是一样的。更多有关回溯结果的详细信息，请参阅不可恢复错误 。

注解： 如果使用*IDF monitor*, 则最后一行回溯结果中的地址将会被替换为相应的文件名和行号。

4.8.5 错误处理模式

1. 尝试恢复。根据具体情况不同，我们具体可以：
   - 在一段时间后，重新调用该函数；
   - 尝试删除该驱动，然后重新进行“初始化”；
   - 采用其他带外机制，修改导致错误发生的条件（例如，对一直没有响应的外设进行复位等）。

   示例：

```
esp_err_t err;
do {
    err = sdio_slave_send_queue(addr, len, arg, timeout);
    // 如果发送队列已满就不断重试
} while (err == ESP_ERR_TIMEOUT);
if (err != ESP_OK) {
    // 处理其他错误
}
```

2. 将错误传递回调用程序。在某些中间件组件中，采用此类处理模式代表函数必须以相同的错误码退出，这样才能确保所有分配的资源都能得到释放。

   示例：

```
sdmmc_card_t* card = calloc(1, sizeof(sdmmc_card_t));
if (card == NULL) {
    return ESP_ERR_NO_MEM;
}
esp_err_t err = sdmmc_card_init(host, &card);
if (err != ESP_OK) {
```

(下页继续)

(续上页)

```
    // 释放内存
    free(card);
    // 将错误码传递给上层（例如通知用户）
    // 或者，应用程序可以自定义错误代码并返回
    return err;
}
```

3. 转为不可恢复错误，比如使用 ESP_ERROR_CHECK。详情请见*ESP_ERROR_CHECK 宏* 章节。
   对于中间件组件而言，通常并不希望在发生错误时中止应用程序。不过，有时在应用程序级别，这种做法是可以接受的。在 ESP-IDF 的示例代码中，很多都会使用 ESP_ERROR_CHECK 来处理各种 API 引发的错误，虽然这不是应用程序的最佳做法，但可以让示例代码看起来更加简洁。
   示例：

```
ESP_ERROR_CHECK(spi_bus_initialize(host, bus_config, dma_chan));
```

4.8.6 C++ 异常

默认情况下，ESP-IDF 会禁用对 C++ 异常的支持，但是可以通过*CONFIG_COMPILER_CXX_EXCEPTIONS* 选项启用。

通常情况下，启用异常处理会让应用程序的二进制文件增加几 kB。此外，启用该功能时还应为异常事故池预留一定内存。当应用程序无法从堆中分配异常对象时，就可以使用这个池中的内存。该内存池的大小可以通过*CONFIG_COMPILER_CXX_EXCEPTIONS_EMG_POOL_SIZE* 来设定。

如果 C++ 程序抛出了异常，但是程序中并没有 catch 代码块来捕获该异常，那么程序的运行就会被 abort 函数中止，然后打印回溯信息。有关回溯的更多信息，请参阅不可恢复错误 。

4.9 ESP-BLE-MESH

4.9.1 概述

蓝牙 mesh 网络实现了无线设备的“多对多”通讯，其可用于建立包含大量设备的网络。

设备能将数据中继至不在初始设备无线电覆盖范围内的其他设备。这样，mesh 网络就能够覆盖非常大的物理区域，并且囊括大量设备。Mesh 网络非常适用于楼宇自动化、传感器网络和其他物联网解决方案，这些情景下数以十计、百计、千计的设备需要与其他设备进行安全可靠的通信。

蓝牙 mesh 并非无线通信技术，而是一种网络技术。该技术基于一种无线通讯协议栈，即低功耗蓝牙。

ESP-BLE-MESH 基于 Zephyr 蓝牙 Mesh 协议栈的顶端，其实现支持设备配网和节点控制，同时也实现了代理、中继、低功耗和朋友等节点功能。

有关 ESP-BLE-MESH 架构实现的信息，请参见*ESP-BLE-MESH 架构*；有关各自 API 的信息，请参见*ESP-BLE-MESH API Reference*。

ESP-BLE-MESH 的实现和认证基于最新的 Mesh Profile v1.0.1 。有关 ESP-BLE-MESH 认证的细节，请参考 此处 。

注解： 如果您在寻找 ESP32 基于 Wi-Fi 的 mesh 方案，请查阅乐鑫的另一款产品 ESP-MESH。更多相关信息及文档，请参见*ESP-MESH*。

4.9.2 ESP-BLE-MESH 快速入门

该章节旨在帮助您基于乐鑫的 ESP32 开发板搭建 ESP-BLE-MESH 网络。

我们将会展示如何搭建并运行一个包含 3 个节点的小型 ESP-BLE-MESH 网络，其中包含设备配网、节点配置，以及向特定节点上的 Generic OnOff Server Model 发送开关灯命令。

如果您是第一次接触 ESP-IDF，请参见 esp-idf 快速入门 来设置开发环境，编译、烧写和运行示例应用程序。

硬件及软件准备

硬件：

- 3 块 ESP32 开发板，请参见*options*。
- 连接开发板的 USB 线。
- ESP-IDF 开发环境。
- 运行 Android 或 iOS 的手机或平板。

软件：

- 下载至 ESP32 开发板的示例应用 bluetooth/esp_ble_mesh/ble_mesh_node。
- 手机 App: **nRF Mesh** Android 或 iOS 版本。除 nRF Mesh 的 App，以下 App 也支持 ESP-BLE-MESH：
  - EspBleMesh Android App
  - Silicon Labs Android 或 iOS App

安装

以下详细步骤可指导您完成安装过程。

步骤 1. 检查硬件 ESP32-DevKitC 和 ESP-WROVER-KIT 开发板均支持 ESP-BLE-MESH。您可以通过 menuconfig: `idf.py menuconfig>Example Configuration>Board selection for ESP-BLE-MESH` 选择特定的开发板。

注解： 如果您打算使用 ESP32-DevKitC 开发板，请将 RGB 灯焊接至 GPIO 管脚 25、26 和 27。

步骤 2. 配置软件 进入 bluetooth/esp_ble_mesh/ble_mesh_node 示例文件夹，运行 `idf.py menuconfig` 选择所使用的开发板，然后运行 `idf.py build` 编译示例。

步骤 3. 下载应用

bluetooth/esp_ble_mesh/ble_mesh_node 示例编译成功后，用户可以运行 `idf.py flash` 将编译生成的二进制文件下载至 3 块开发板中。

当开发板上电后，RGB 灯会变为 **绿色**。

步骤 4. 设备配网 在该章节中，我们将使用 **nRF Mesh Android** App 演示如何配网设备。用户也可以从 App Store 下载其 iOS 版本。

4.1 扫描 (scanner) 扫描 (Scanner) 是 nRF Mesh App 搜索蓝牙通信范围内未配网设备的功能。打开 App，点击底部的扫描按钮 **Scanner**。App 就会开始扫描设备，很快，我们便可在屏幕上看到 3 个未配网设备。

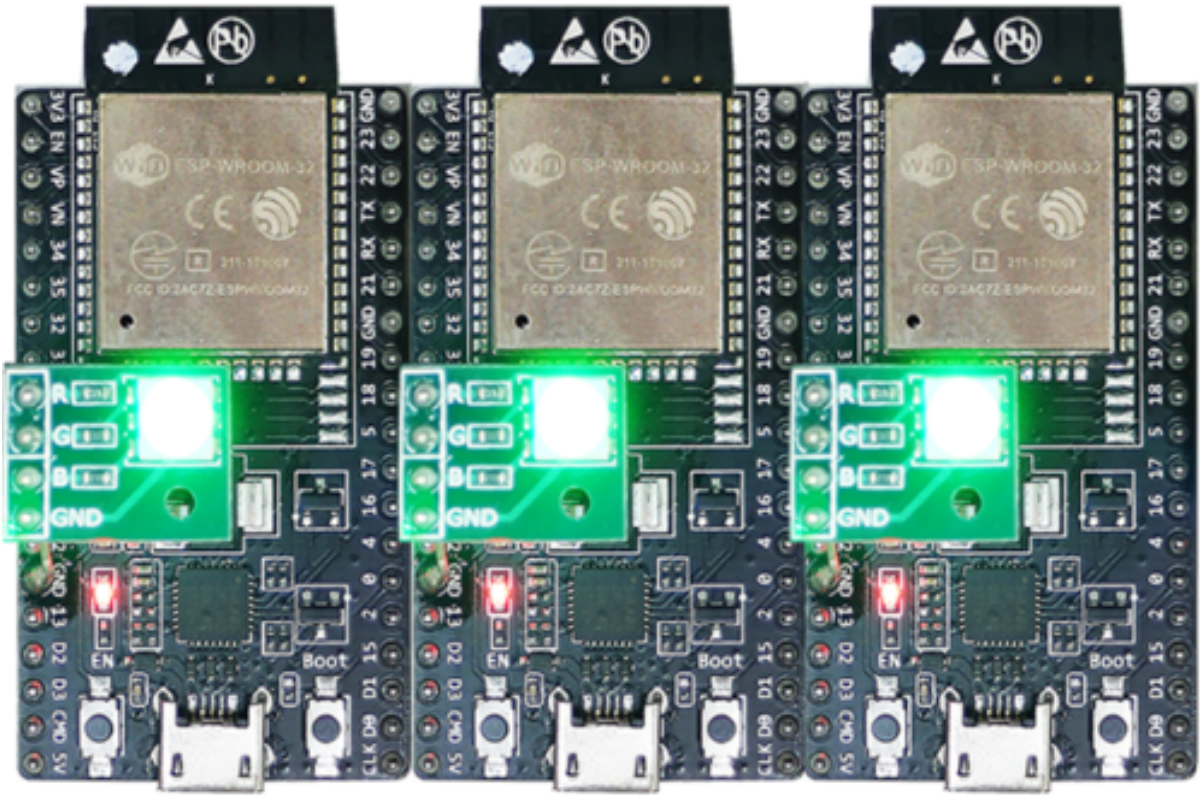

图 4: ESP-BLE-MESH 设备上电

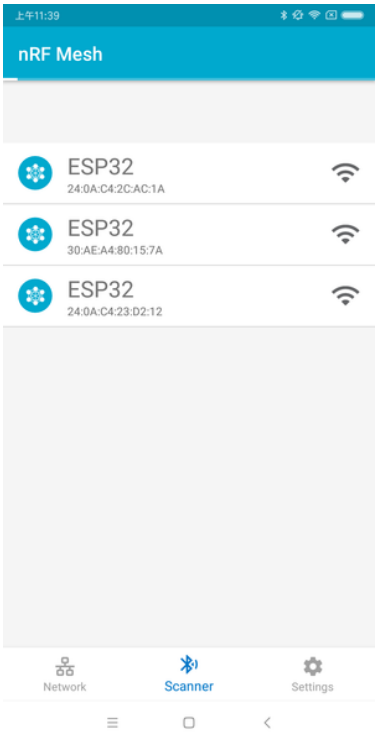

图 5: nRF Mesh - 扫描

4.2 识别 用户可以选择任何一个未配网设备，此时 App 会尝试和该设备建立连接。连接成功（有时可能需要尝试多次），且发现相应的 ESP-BLE-MESH GATT 服务后，用户可以在屏幕中看到识别按钮 **IDENTIFY**。IDENTIFY 操作告诉用户哪个设备将被配网。

注解： IDENTIFY 需要设备侧的支持，然后才能用来识别当前正在配网的设备。当前如果点击识别按钮 **IDENTIFY**，除了串口输出的 log，在当前的 example 中设备侧不会有其他现象。

点击识别按钮 **IDENTIFY** 后，用户可以看到配网按钮 **PROVISION**。

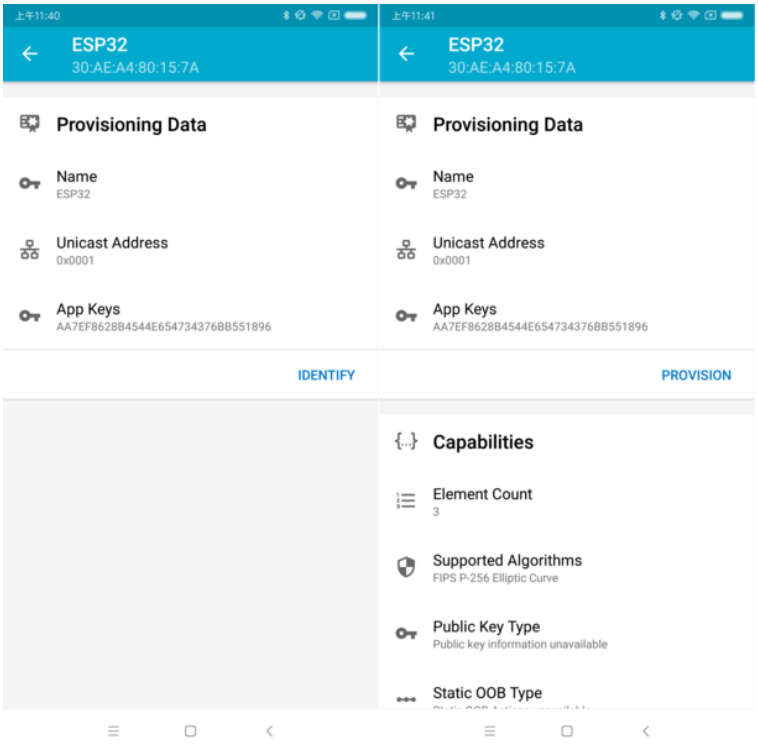

图 6: nRF Mesh - 识别 - 配网

4.3 配网 点击配网按钮 **PROVISION**，App 会开始配网设备。当设备配网成功后，开发板上的 RGB 灯会熄灭，此时 App 会执行以下几个步骤：

1. 和该节点（设备配网后成为节点）断开连接
2. 尝试和该节点重新建立连接
3. 连接成功并且发现了相应的 ESP-BLE-MESH GATT 服务
4. 获取节点的 Composition Data 并且给该节点添加 AppKey

当以上所有的步骤完成后，节点初始配置完成. 此时点击 **OK**，用户可以看见节点的单播地址分配成功，并且其 Composition Data 也被成功解析.

有时在上述步骤 2 中，App 可能与节点连接失败。这种情况下，用户点击 **OK** 后可以看到，节点只有单播地址被成功分配，Composition data 并没有被成功获取。此时用户需要点击右上角的连接按钮 **CONNECT**，屏幕上会显示原先配网的节点，用户需要选择该节点并与其建立连接。

连接成功后，App 会显示获取 Composition Data 以及添加 AppKey 的按钮。

如果该设备是 App 配网的第二个或第三个节点，此时点击连接按钮 **CONNECT** 后，用户可以在屏幕中看到 2 个或 3 个节点。这种情况下，用户可以选择其中的任何一个节点建立连接，连接成功后可以返回至主界面选择需要配置的节点。

这里给出了一个 3 个节点的示例。

- 左侧图片表示第三个设备成功配网，但是 App 没有和其成功建立连接。当 App 尝试去重新连接第三个节点时，界面上会出现 3 个节点。

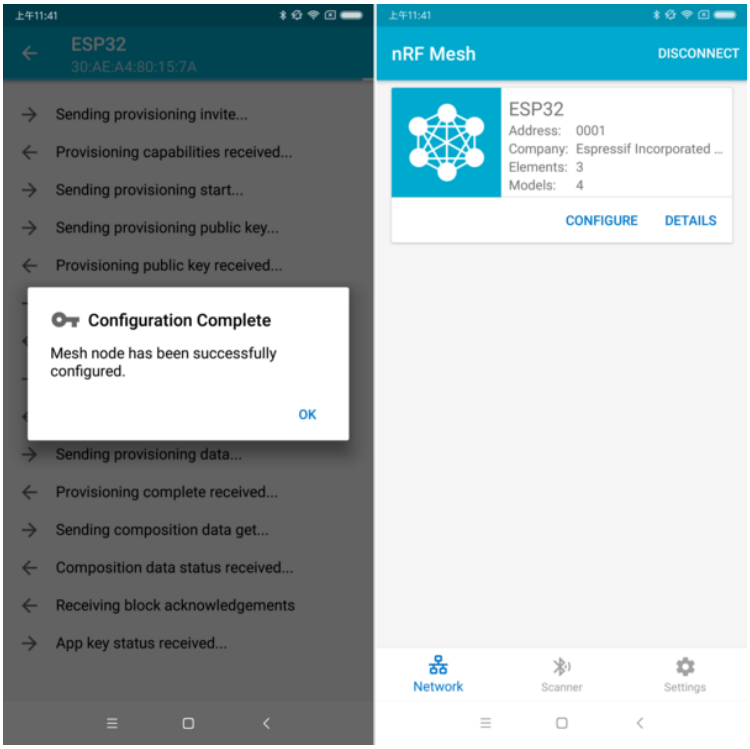

图 7: nRF Mesh - 配置完成

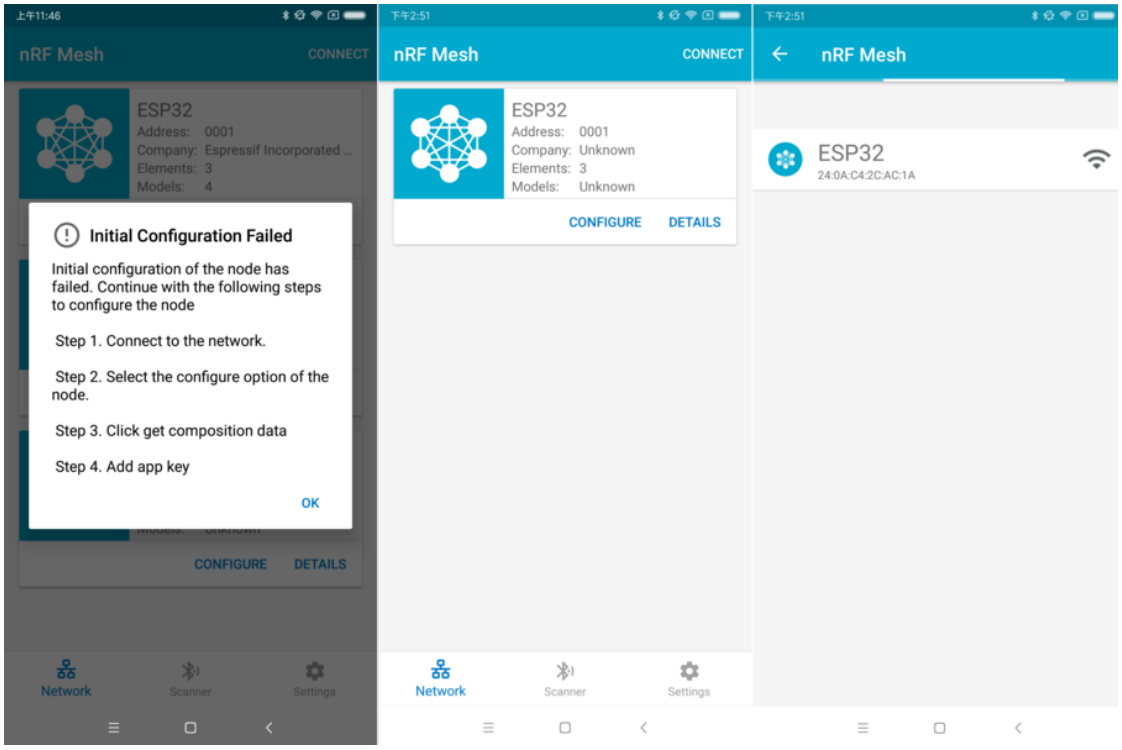

图 8: nRF Mesh - 初始配置失败

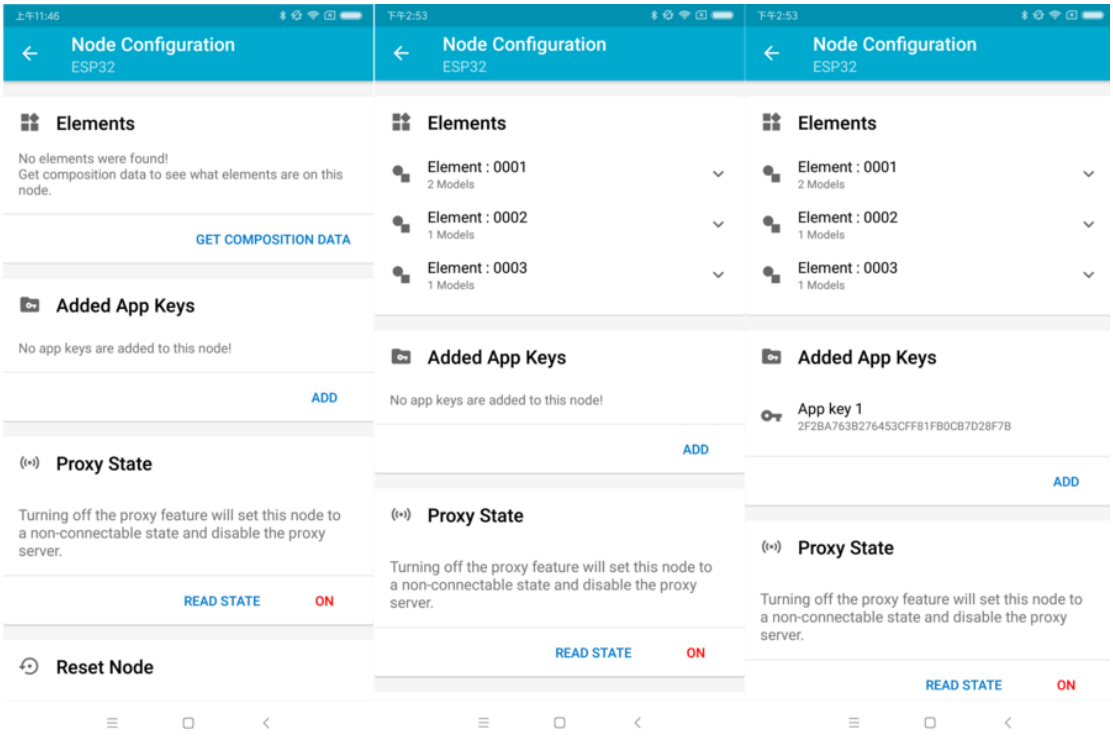

图 9: nRF Mesh - 重连 - 初始配置

- 右侧图片表示和节点成功建立连接后，App 显示这 3 个节点的信息。用户可以看到 App 已经获取了第一个和第二个节点的 Composition Data，但是对于第三个节点，只有单播地址被成功分配而节点的 Composition Data 未知。

4.4 配置 当成功配网和初始配置完成后，用户可以配置节点的其余信息，例如将 AppKey 绑定至每个元素 (element) 的每个模型 (model) 中、设置模型的发布信息等。

下图展示了如何将 AppKey 绑定至 Primary Element 中的 Generic OnOff Server Model 上。

注解： 用户不需要将 AppKey 绑定至 Configuration Server Model，因为该模型使用 DevKey 在 Upper Transport Layer 中对消息进行加密。

Step 5. 运行网络 当 3 个元素中的 Generic OnOff Server Models 均成功绑定 AppKey 后，用户可以使用 App 开关 RBG 灯。

在 bluetooth/esp_ble_mesh/ble_mesh_node 示例中，第一个 Generic OnOff Server Model 用来控制 **红色**，第二个用来控制 **绿色**，同时第三个用来控制 **蓝色**.

下图展示了打开了不同色灯的开发板。

注解： 对于 **nRF Mesh** iOS App [version 1.0.4]，当节点包含超过一个元素时，App 表现不正确。如果用户尝试打开或者关闭第 2 个或第 3 个 Generic OnOff Server Model，App 会将相应的消息发送至第 1 个 Generic OnOff Server Model。

4.9.3 ESP-BLE-MESH 示例

- ESP-BLE-MESH 节点 - 展示了将 ESP-BLE-MESH 作为拥有 Configuration Server model 和 Generic

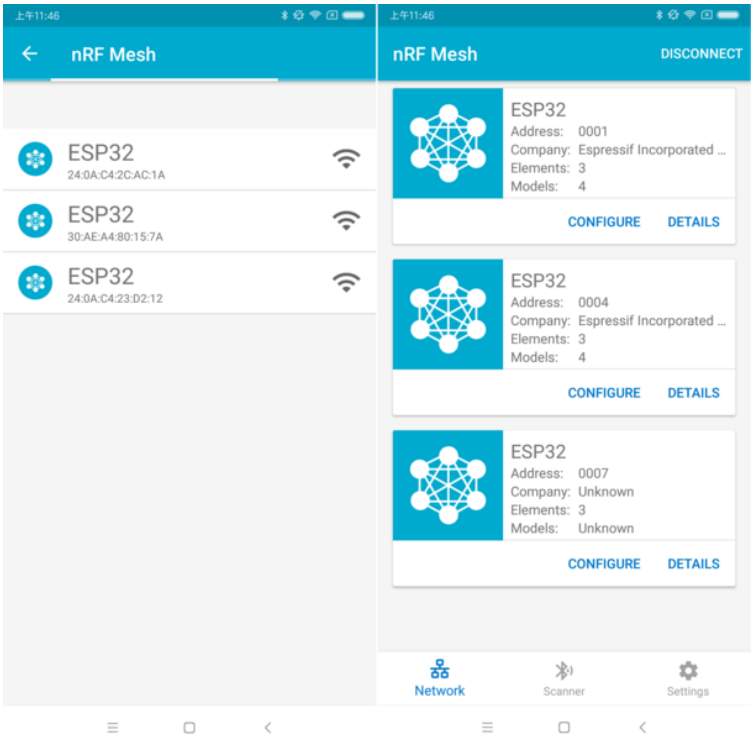

图 10: nRF Mesh - 重连 - 3 个节点

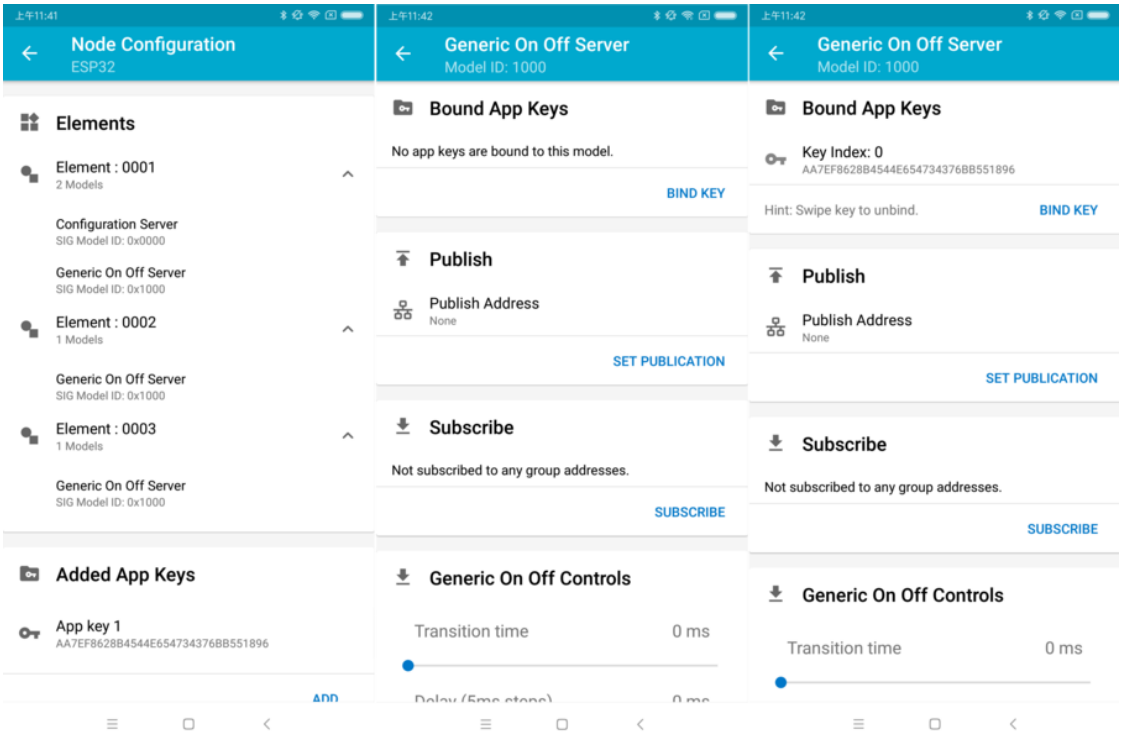

图 11: nRF Mesh - Model Bind AppKey

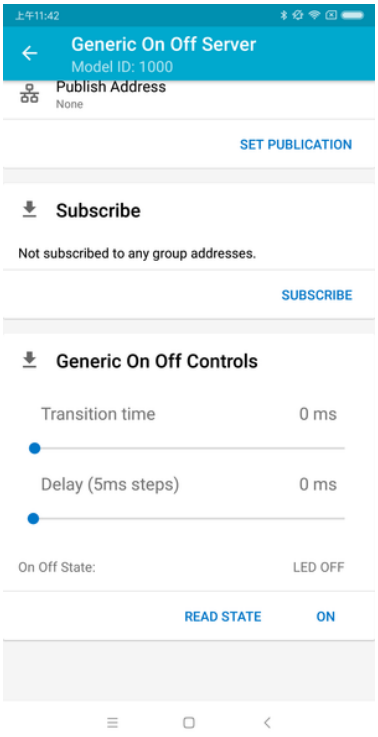

图 12: nRF Mesh - 通用开关控制

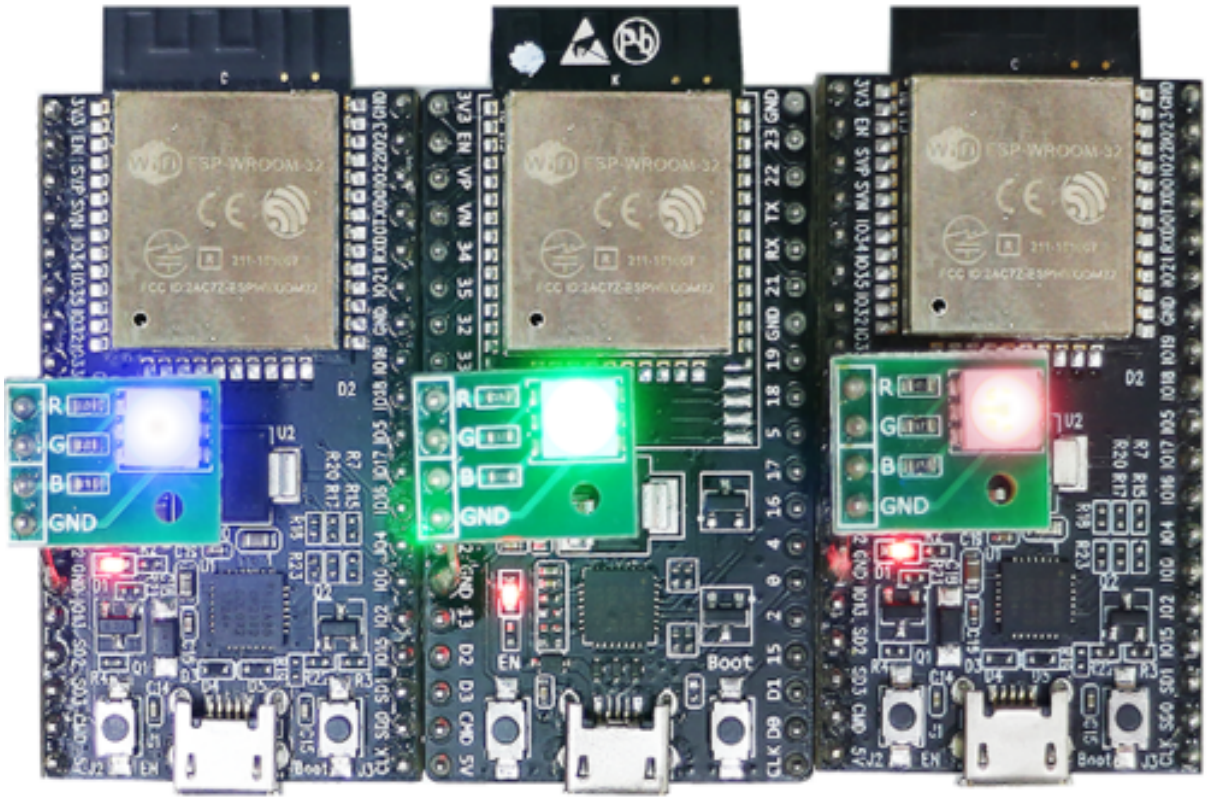

图 13: 3 个上电的 ESP-BLE-MESH 节点

OnOff Server model 的节点设备的用法。然后，ESP-BLE-MESH Provisioner 可以配网设备，控制表示开/关状态的 RGB 灯，示例请见 example code 。

- ESP-BLE-MESH 客户端模型 - 展示了 Generic OnOff Client model 如何在节点内工作。节点拥有 Configuration Server model、Generic OnOff Server model 和 Generic OnOff Client model，示例请见：example code 。
- ESP-BLE-MESH Provisioner - 展示了设备如何充当 ESP-BLE-MESH Provisioner 以配网设备。Provisioner 拥有 Configuration Server model、Configuration Client model 和 Generic OnOff Client model，示例请见 example code 。
- ESP-BLE-MESH 快速配网 - Client 和 Server - 该示例用于演示快速配网。配网 100 个设备费时不超过 60 秒，示例请见：example client code 和 example server code 。
- Wi-Fi 和 ESP-BLE-MESH 共存 - 该示例用于演示 Wi-Fi 和 ESP-BLE-MESH 共存的功能。简而言之，用户可在运行 ESP-BLE-MESH 时使用 Wi-Fi，示例请见 example code 。
- ESP-BLE-MESH 节点控制台 - 该演示实现 ESP-BLE-MESH 节点的基本功能。在演示中，Provisioner and Node 可以扫描、验证节点，节点可以回复 Provisioner 的获取/设置消息，示例请见：example code 。

4.9.4 ESP-BLE-MESH 演示视频

- Provisioning of ESP-BLE-MESH nodes using Smartphone App
- Espressif Fast Provisioning using ESP-BLE-MESH App
- Espressif ESP-BLE-MESH and Wi-Fi Coexistence

4.9.5 ESP-BLE-MESH 常见问题手册

- *1. Provisioner 开发*
- *2. 节点开发*
- *3. ESP-BLE-MESH 和 Wi-Fi 共存*
- *4. 快速配网*
- *5. Log 帮助*
- *6. 示例帮助*
- *7. 其他*

4.9.6 相关文档

ESP-BLE-MESH Feature List

Supported Features

Mesh Core

- **Provisioning: Node Role**
  - PB-ADV and PB-GATT
  - OOB Authentication
- **Provisioning: Provisioner Role**
  - PB-ADV and PB-GATT
  - OOB Authentication
- **Networking**
  - Relay
  - Segmentation and Reassembly
  - Key Refresh Procedure
  - IV Update Procedure
  - Friend
  - Low Power
  - Proxy Server
  - Proxy Client

- **Multiple Client Models Run Simultaneously**
  - Support multiple client models send packets to different nodes simultaneously
  - No blocking between client model and server model
- **NVS Storing**
  - Store provisioning and configuration information of ESP-BLE-MESH Node

Mesh Models

- **Foundation models**
  - Configuration Server model
  - Configuration Client model
  - Health Server model
  - Health Client model
- **Generic client models**
  - Generic OnOff Client
  - Generic Level Client
  - Generic Default Transition Time Client
  - Generic Power OnOff Client
  - Generic Power Level Client
  - Generic Battery Client
  - Generic Location Client
  - Generic Property Client
- **Sensor client models**
  - Sensor Client
- **Time and Scenes client models**
  - Time Client
  - Scene Client
  - Scheduler Client
- **Lighting client models**
  - Light Lightness Client
  - Light CTL Client
  - Light HSL Client
  - Light xyL Client
  - Light LC Client
- **Generic server models**
  - Generic OnOff Server
  - Generic Level Server
  - Generic Default Transition Time Server
  - Generic Power OnOff Server
  - Generic Power OnOff Setup Server
  - Generic Power Level Server
  - Generic Power Level Setup Server
  - Generic Battery Server
  - Generic Location Server
  - Generic Location Setup Server
  - Generic User Property Server
  - Generic Admin Property Server
  - Generic Manufacturer Property Server
  - Generic Client Property Server
- **Sensor server models**
  - Sensor Server
  - Sensor Setup Server
- **Time and Scenes server models**
  - Time Server
  - Time Setup Server
  - Scene Server
  - Scene Setup Server
  - Scheduler Server

  - Scheduler Setup Server
- **Lighting server models**
  - Light Lightness Server
  - Light Lightness Setup Server
  - Light CTL Server
  - Light CTL Temperature Server
  - Light CTL Setup Server
  - Light HSL Server
  - Light HSL Hue Server
  - Light HSL Saturation Server
  - Light HSL Setup Server
  - Light xyL Server
  - Light xyL Setup Server
  - Light LC Server
  - Light LC Setup Server

Mesh Applications

- **ESP-BLE-MESH Node**
  - Tutorial
  - Tutorial
  - Example
- **ESP-BLE-MESH Provisioner**
  - Tutorial
  - Example
- **ESP-BLE-MESH Fast Provisioning**
  - Fast Provisioning Client Model Tutorial
  - Fast Provisioning Server Model Tutorial
  - Example
  - Demo Video
- **ESP-BLE-MESH and Wi-Fi Coexistence**
  - Tutorial
  - Example
  - Demo Video
- **ESP-BLE-MESH Console Commands**
  - Example

Future Release Features

Mesh Core

- Provisioner NVS Storage

Mesh Applications

- Fast OTA
- Friendship

ESP-BLE-MESH 架构

本文档将介绍 ESP-BLE-MESH 的架构概览、架构实现和辅助程序。

- ESP-BLE-MESH 架构概览
  - 描述了 ESP-BLE-MESH 架构的 5 大部分及每个部分的功能。
- ESP-BLE-MESH 架构实现
  - 描述了 ESP-BLE-MESH 文件的基本功能、文件与 ESP-BLE-MESH 架构的对应关系及文件间调用的接口。

- ESP-BLE-MESH 辅助程序
  - 描述了 ESP-BLE-MESH 的辅助程序，比如 Mesh 网络管理，Mesh 特性等。

1. ESP-BLE-MESH 架构概览 目前，ESP-BLE-MESH 已经实现了 Mesh Profile 的大多数功能及 Mesh Model 规范中定义的所有 Client Model。未支持的功能/模型尚在开发中，会尽快提供。ESP-BLE-MESH 已通过 Bluetooth SIG 蓝牙技术联盟的 认证。

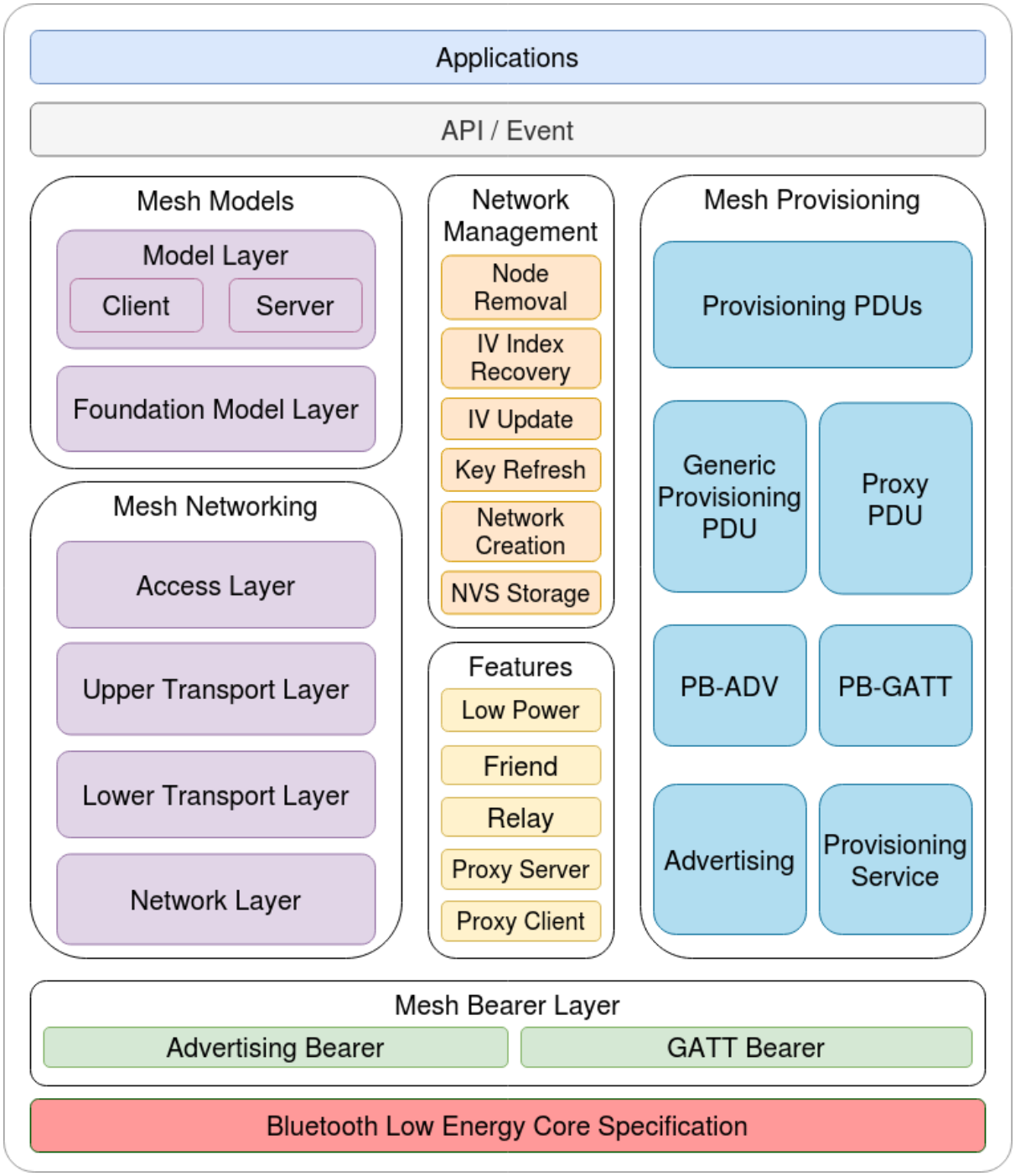

图 14: 图 1.1 ESP-BLE-MESH 架构图

ESP-BLE-MESH 架构主要由以下 5 大部分组成：

- `Mesh` 协议栈
  - `Mesh Networking` 负责 BLE Mesh 设备的网络消息处理等。

  - Mesh Provisioning 负责 BLE Mesh 设备的启动配置流程。
  - Mesh Models 负责实现 SIG 定义的模型。
- 网络管理
  - 负责实现网络管理程序，包括节点删除程序、网络索引 (IV Index) 恢复程序等。
- 特性
  - 包括 BLE Mesh 特性，如低功耗特性、好友特性、中继特性等。
- Mesh 承载层
  - 包括 广播承载层和 GATT 承载层。承载层对于 ESP-BLE-MESH 协议栈至关重要，因为协议栈基于蓝牙低功耗技术构建而成，其必须利用承载层通过 BLE 广播通道和连接通道进行数据传输。
- 应用程序
  - 基于 ESP-BLE-MESH 协议栈和 Mesh Models。
  - 通过调用 API 和处理事件，Applications 实现了与 ESP-BLE-MESH 协议栈中的 Mesh Networking 和 Mesh Provisioning 的交互，也实现了与 Mesh Models 中一系列模型的交互。

1.1 Mesh 协议栈

1.1.1 Mesh Networking

协议栈架构中的 Mesh Networking 实现了如下功能:

- Mesh 网络中节点间的通讯。
- Mesh 网络中消息的加解密。
- Mesh 网络资源的管理，如网络秘钥 (NetKey)、网络索引等。
- Mesh 网络消息的分包与重组。
- 消息在不同模型间的模型映射。
- 更多功能，请参见*ESP-BLE-MESH Feature List*。

Mesh Networking 功能的实现是基于层级结构的。每一层的功能如表 1.1 所示:

表 2: 表 1.1 Mesh Networking 框架描述

层级	功能
接入层	接入层定义应用程序数据的格式，还对上层传输层对数据包的加密和解密进行定义和控制。
上层传输层	上层传输层对接入层进出的应用数据进行加密、解密和认证，同时也处理被称为“传输控制消息”的特殊消息，这种消息包括了与“友谊”和心跳包相关的消息。
底层传输层	底层传输层处理 PDU 的分包和重组。
网络层	网络层定义网络消息的地址类型和格式，实现设备的中继功能。

1.1.2 Mesh Provisioning

协议栈架构中的 Mesh Provisioning 实现了如下功能:

- 对未配网设备的配网。
- Mesh 网络资源的分配 (单播地址、网络索引和网络秘钥)。
- 配网期间对 4 种验证方法的支持。
- 更多功能，请参见*ESP-BLE-MESH Feature List*。

Mesh Provisioning 功能的实现是基于层级结构的。每一层的功能如表 1.2 所示:

表 3: 表 1.2 Mesh Provisioning 框架描述

层级	功能
Provisioning PDUs	通过配网协议处理不同层级的 Provisioning PDUs。
Generic Provisioning PDU/Proxy PDU	使用 Generic Provisioning 层或代理协议层将 Provisioning PDU 传输到未配网的设备。
PB-ADV/PB-GATT	这些层级定义了 Provisioning PDUs 作为可分包和重组的消息进行传输的方式。
Advertising/Provisioning Service	Provisioning bearer 定义了会话建立的方式，该方式用来将 Generic Provisioning 层的传输包传送到设备。

1.1.3 Mesh Models 协议栈架构中的 Mesh Models 实现了如下功能：

- Configuration Client/Server Models
- Health Client/Server Models
- Generic Client/Server Models
- Sensor Client/Server Models
- Time and Scenes Client/Server Models
- Lighting Client/Server Models

每一层的功能如表 1.3 所示：

表 4: 表 1.3 Mesh Models 框架描述

层级	功能
模型层	模型层实现用于标准化典型用户场景操作的模型，包括 Generic Client/Server Models、Sensor Client/Server Models、Time and Scenes Client/Server Models、Lighting Client/Server Models 和若干自定义模型。
基础模型层	基础模型层实现与 ESP-BLE-MESH 网络配置、管理和自我诊断等相关的模型。

1.2 Mesh 网络管理 网络管理实现了如下功能：

- 节点移除程序：用于将节点从网络中移除。
- 网络索引恢复程序：用于恢复节点的网络索引。
- 网络索引更新程序：用于更新节点的网络索引。
- 秘钥更新程序：用于更新节点的网络秘钥、应用秘钥 (AppKey) 等。
- 网络创建程序：用于创建 mesh 网络。
- NVS 存储器：用于存储节点的网络信息。

1.3 Mesh 特性 特性包括以下几项：

- 低功耗特性：用于降低节点的能耗。
- 好友特性：用于为低功耗节点存储消息。
- 中继特性：用于中继/转发节点通过广播承载层收到的网络 PDU.
- Proxy Server/Client 是代理协议中的两个节点角色，其使节点可以通过面向连接的承载层收发 Network PDUs、mesh beacons、代理配置消息和 Provisioning PDU。

1.4 Mesh 承载层 协议栈框架中的 承载层负责 ESP-BLE-MESH 协议栈和低功耗蓝牙核心协议间的数据传输。

承载层可视为是基于蓝牙低功耗核心协议的载体层，其实现了 ESP-BLE-MESH 协议栈数据的接收和传输。

表 5: 表 1.3 Mesh 承载层描述

层级	功能
GATT 承载层	GATT 承载层使用代理协议通过 GATT 连接在两个设备之间发送和接收 Proxy PDUs。
广播承载层	使用广播承载层时，必须使用低功耗蓝牙广播通道来发送 mesh 数据包，数据包中的 AD Type 需要设置为 mesh 数据包的类型。

1.5 Mesh 应用层 协议栈框架图中的 应用层通过调用 ESP-BLE-MESH 协议栈提供的 API 并处理协议栈上报的事件来实现相应的功能，有一些常见应用，比如网关、照明等。

应用层和 API / 事件之间的交互

- 应用层调用 API
  - 调用配网相关的 API 进行配网。
  - 调用模型相关的 API 发送消息。
  - 调用设备属性相关的 API 获取设备的本地信息。

- 应用层处理事件
  应用层的设计基于事件设计，事件将参数传输给应用层。事件主要分为两大类。
  - **调用 API 完成的事件**。
    * 比如接收消息的节点。
  - **协议栈主动上报给应用层的事件**。
    * 协议栈主动上报的事件。
    * 模型主动上报的事件。
- 事件通过应用层注册的回调函数进行上报，同时回调函数中也会包含对事件的相应处理。

`API` /事件与 ESP-BLE-MESH 协议栈的交互

- 用户使用的 API 主要调用 “Mesh Networking“、`Mesh Provisioning` 和 `Mesh Models` 提供的函数。
- `API` /事件和协议栈的交互不会跨越协议栈的层级进行操作。比如 API 不会调用 `Network Layer` 相关的函数。

2. ESP-BLE-MESH 架构实现 ESP-BLE-MESH 架构的设计和实现是基于层级和模块的。具体而言，第 2.1 节（Mesh 网络的实现），第 2.2 节（Mesh 配网实现）和第 2.3 节（Mesh 层级实现）基于层级思想，第 2.4 节（网格模型的实现）基于模块思想。

- **层级思想**: 基于层级思想，网络架构根据 Mesh Profile Specification 中指定的层级设计而成。每层都有独特的文件，文件包括该层的 API 等。具体设计如图 2.1 所示。
- **模块思想**: 每个文件实现一个独立的功能，供其它程序调用。

ESP-BLE-MESH 架构采用分层的方式进行设计，数据包的处理所经过的层级顺序是固定的，也就是数据包的处理过程会形成一个 消息流。因此，我们可以从图 2.1 的协议栈接口图中看到消息流。

2.1 Mesh 协议栈的实现

2.1.1 Mesh Networking 实现 `Mesh Networking` 中的文件列表和每个文件实现的功能如表 2.1 所示：

表 6: 表 2.1 Mesh Networking 文件描述

文件	功能
access.c	BLE Mesh 接入层
transport.c	BLE Mesh 底层/上层传输层
net.c	BLE Mesh 网络层
adv.c	用于发送 BLE Mesh 广播包的任务，一个用于处理收到的广播包的回调以及用于分配 adv 缓冲区的 API

2.1.2 Mesh Provisioning 实现 由于 Node/Provisioner 共存的限制，Mesh Provisioning 的实现分为两大模块。

实现 Node 启动配置的特定文件如表 2.2 所示：

表 7: 表 2.2 Mesh Provisioning（节点）文件描述

文件	功能
prov.c	BLE Mesh 节点配网 (PB-ADV & PB-GATT)
proxy_server.c	BLE Mesh 节点代理服务器相关功能
beacon.c	用于处理 BLE Mesh Beacon 的 API

实现 Provisioner 配置功能的特定文件如表 2.3 所示：

表 8: 表 2.3 Mesh Provisioning (Provisioner) 文件描述

文件	功能
provisioner_prov.c	BLE Mesh Provisioner 配置入网 (PB-ADV & PB-GATT)
proxy_client.c	BLE Mesh 代理客户端相关功能
provisioner_main.c	BLE Mesh Provisioner 网络相关功能

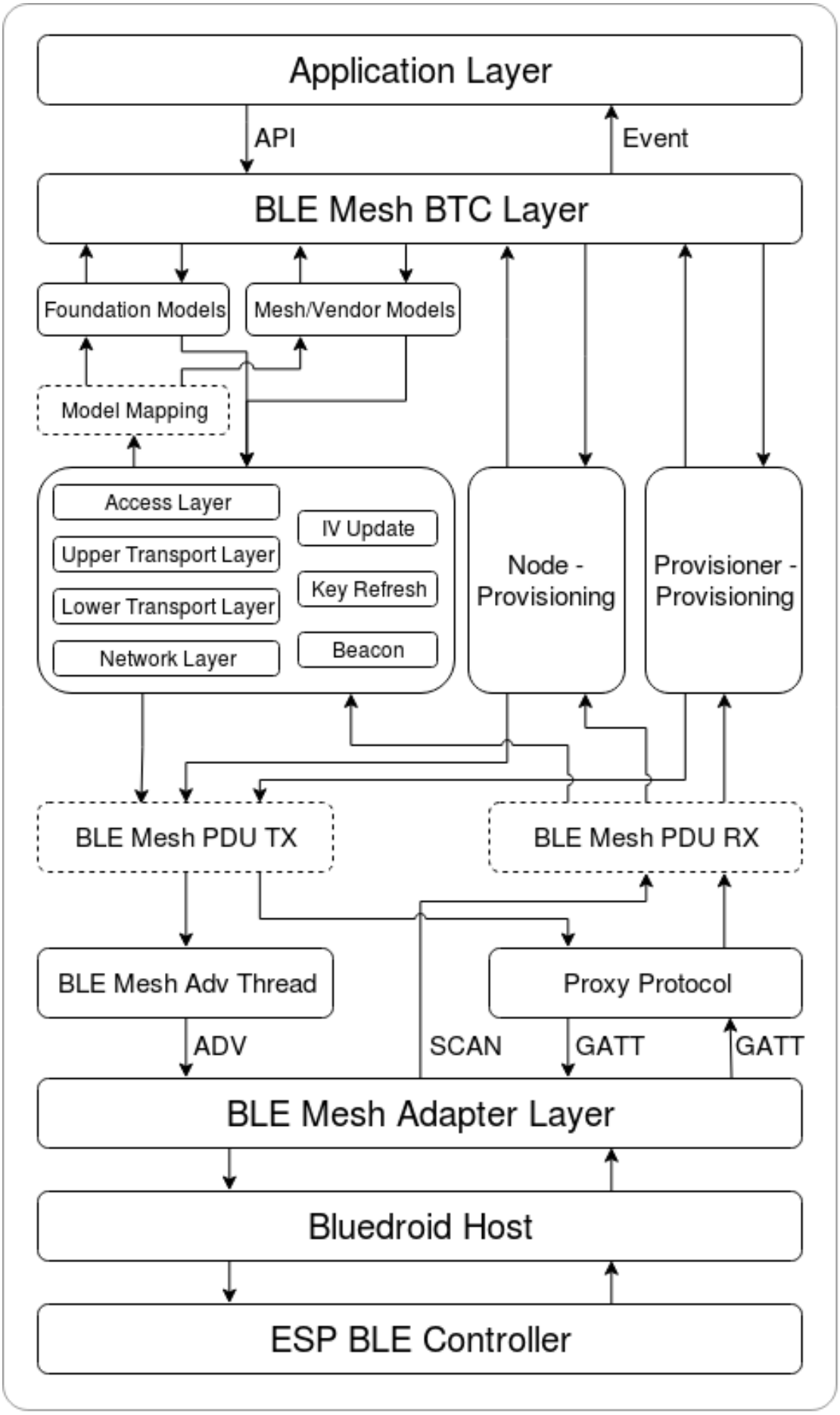

图 15: 图 2.1 ESP-BLE-MESH 架构实现图

2.1.3 Mesh Models 实现 Mesh Models 用于实现节点中所包含的模型的具体功能。服务器模型主要用于维护节点状态。客户端模型主要用于获取和修改节点状态。

表 9: Table 2.4 Mesh Models 文件描述

文件	功能
cfg_cli.c	发送 Configuration Client 消息，接收相应应答消息
cfg_srv.c	接收 Configuration Client 消息，发送适当应答消息
health_cli.c	发送 Health Client 消息，接收相应应答消息
health_srv.c	接收 Health Client 消息，发送适当应答消息
client_common.c	BLE Mesh 模型相关操作
generic_client.c	发送 BLE Mesh Generic Client 消息，接收相应应答消息
lighting_client.c	发送 BLE Mesh Lighting Client 消息，接收相应应答消息
sensor_client.c	发送 BLE Mesh Sensor Client 消息，接收相应应答消息
time_scene_client.c	发送 BLE Mesh Time Scene Client 消息，接收相应应答消息

2.2 Mesh Bearers 实现 Mesh Bearers 在实现时充分考虑了可移植性。当 ESP-BLE-MESH 协议栈需要移植到其它平台时，用户只需要修改 mesh_bearer_adapt.c 就能移植成功。

表 10: 表 2.5 Mesh Bearers 文件描述

文件	功能
mesh_bearer_adapt.c	BLE Mesh 承载层适配文件。此文件提供用于接收和发送 BLE Mesh ADV 和 GATT 相关数据包的接口。

注解： mesh_bearer_adapt.c 是对 Mesh 网络框架中 `Advertising Bearer` 和 `GATT Bearer` 的实现。

2.3 Mesh Applications 实现 我们提供了一系列用于客户开发的应用示例，用户可以基于*ESP-BLE-MESH 示例* 开发产品。

3. ESP-BLE-MESH 辅助程序 辅助程序指的是 ESP-BLE-MESH 协议栈中可选的功能。辅助程序的设计通常通过*CONFIG_BLE_MESH* 来实现代码的裁剪。

3.1 特性

- 低功耗
- 好友
- 中继
- 代理客户端/代理服务器

3.2 网络管理

- 节点移除程序
- 网络索引恢复程序
- 网络索引更新程序
- 秘钥更新程序
- 网络创建程序
- NVS 存储器

3.3 辅助程序实现 采用独立模块的设计主要考虑到两个因素：

- 该模块不具备分层实现的条件，其实现可以完全独立，不需要依赖其它模块。
- 模块中的函数会被反复使用到，因此最好设计成独立模块。独立模块如表 3.1 所示：

表 11: 表 3.1 模块文件描述

文件	功能
lpn.c	BLE Mesh 低功耗功能
friend.c	BLE Mesh 好友功能
net.c	BLE Mesh 中继功能、网络创建、网络索引更新程序、网络索引恢复程序、秘钥更新程序相关功能
proxy_server.c	BLE Mesh 代理服务器相关功能
proxy_client.c	BLE Mesh 代理客户端相关功能
settings.c	BLE Mesh NVS 存储器功能
main.c	BLE Mesh 协议栈初始化，协议栈使能，节点移除相关功能

ESP-BLE-MESH 常见问题手册

本文汇总了 ESP-BLE-MESH 协议栈开发的常见问题及解答，全文分为 7 个章节。

- *1. Provisioner 开发*
- *2. 节点开发*
- *3. ESP-BLE-MESH 和 Wi-Fi 共存*
- *4. 快速配网*
- *5. Log 帮助*
- *6. 示例帮助*
- *7. 其他*

用户可以参考这些章节，快速找到问题的答案。该文档会根据各种渠道收集的反馈进行更新。

1. Provisioner 开发 通常而言，Provisioner 用于配网未配网设备并形成 mesh 网络。组网后，设备的角色变成节点。

1.1 未配网设备加入 ESP-BLE-MESH 网络的流程是什么？

设备通过 Provisioner 加入 ESP-BLE-MESH 网络分为两个阶段，配网阶段和配置阶段。

- 配网阶段：为设备分配单播地址、添加网络密钥 (NetKey) 等。通过配网，设备加入 ESP-BLE-MESH 网络，身份从未配网设备变为节点。
- 配置阶段：为节点添加应用密钥 (AppKey), 并将应用密钥绑定到相应模型。配置期间，有些选项是可选的，比如为节点添加订阅地址、设置发布地址等。通过配置，该节点实际上可以向 Provisioner 发送消息，也可以接收来自 Provisioner 的消息。

1.2 如果 Provisioner 想要改变节点状态，其需满足什么条件？

- 需要有和节点的服务器模型相对应的客户端模型。
- 需要和节点有相同的、可用于加密消息的网络密钥和应用密钥。
- 需要知道节点的地址，可以是单播地址，也可以是订阅地址。

1.3 如何使用网络密钥和应用密钥？

- 网络密钥用于加密网络层的消息。具有相同网络密钥的节点视作在同一网络中，具有不同网络密钥的节点相互之间不能进行通信。
- 应用密钥用于加密上层传输层中的消息。如果服务器模型和客户端模型绑定的应用密钥不同，则无法实现相互通信。

1.4 如何生成网络密钥或应用密钥？是否可以采用固定的网络密钥或应用密钥？

- API `esp_ble_mesh_provisioner_add_local_net_key()` 可以用来添加包含固定值或随机值的网络密钥。

- API *esp_ble_mesh_provisioner_add_local_app_key()* 可以用来添加包含固定值或随机值的应用密钥。

1.5 Provisioner 的单播地址是不是固定的？

esp_ble_mesh_prov_t 中 prov_unicast_addr 的值用于设置 Provisioner 的单播地址，只能在初始化期间设置一次，此后不能更改。

1.6 Provisioner 的地址是否可以作为节点上报状态消息的目的地址？

Provisioner 的单播地址只能在初始化期间设置一次，此后不能更改。理论而言，只要节点知道 Provisioner 的单播地址，此地址便可用作节点上报状态消息的目的地址。节点在网络配置的过程中可以知道 Provisioner 的单播地址，因为 Provisioner 往节点发送消息时，消息的源地址就是 Provisioner 的单播地址。

订阅地址也可使用。Provisioner 订阅组地址或者虚拟地址，节点向该订阅地址发送消息。

1.7 被 Provisioner 配网到 ESP-BLE-MESH 网络中的第一个节点的单播地址是不是固定的？

esp_ble_mesh_prov_t 中 prov_start_address 的值用于设置 Provisioner 配网未配网设备的起始地址，即其首先配网的节点的单播地址。单播地址只能在初始化期间设置一次，此后不能修改。

1.8 手机 App 首先配置的节点的单播地址是不是固定的？

该 App 将确定单播地址，目前大多数单播地址是固定的。

1.9 如何知道当前 Provisioner 正在配网哪个未配网设备？

esp_ble_mesh_prov_t 中 prov_attention 的值由 Provisioner 在配网过程中设置给未配网设备。该值只能在初始化期间设置一次，此后不能修改。未配网设备加入 mesh 网络后可以用特定的方式来显示自己正在配网，比如灯光闪烁，以告知 Provisioner 其正在配网。

1.10 配网过程中，认证设备共有多少种方法？提供的范例中 provided examples 使用了什么方法？

共有四种设备认证方法，即 No OOB、Static OOB、Output OOB 和 Input OOB。提供的范例使用了 No OOB 的方式。

1.11 配置入网前，未配网设备的广播包可以携带哪些信息？

- Device UUID
- OOB Info
- URL Hash (可选的)

1.12 这些信息可以用于设备识别吗？

是的。每个设备都有独一无二的 Device UUID, 用户可以通过 Device UUID 识别设备。

1.13 当 Provisioner 配网的节点包含多个元素时，单播地址是如何分配的？

- Provisioner 会给设备的主元素分配一个单播地址，其余元素的单播地址在此基础上递增。
- 比如：如果一个未配网设备有三个元素，即主要元素、第二元素和第三元素。配网完成后，节点主元素的单播地址为 0x0002，节点第二元素的单播地址为 0x0003，节点第三元素的单播地址为 0x0004。

1.14 Provisioner 如何通过 Configuration Client Model 获取并且解析节点的构成数据？

- Provisioner 可以调用*Configuration Client Model* API *esp_ble_mesh_config_client_set_state()* 设置参数，调用*esp_ble_mesh_cfg_client_get_state_t* 中的 comp_data_get 获取节点的构成数据。
- 用户可以参考以下代码解析 Composition Data:

```
#include <stdio.h>
#include <string.h>
#include <stdint.h>

//test date: 0C001A0001000800030000010501000000800100001003103F002A00
//0C00 1A00 0100 0800 0300 0001 05 01 0000 0080 0100 0010 0310 3F002A00

// CID is 0x000C
// PID is 0x001A
// VID is 0x0001
// CRPL is 0x0008
// Features is 0x0003 - Relay and Friend features.
// Loc is "front" - 0x0100
// NumS is 5
// NumV is 1
// The Bluetooth SIG Models supported are: 0x0000, 0x8000, 0x0001, 0x1000,
↪ 0x1003
// The Vendor Models supported are: Company Identifier 0x003F and Model␣
↪Identifier 0x002A

typedef struct {
    int16_t cid;
    int16_t pid;
    int16_t vid;
    int16_t crpl;
    int16_t features;
    int16_t all_models;
    uint8_t sig_models;
    uint8_t vnd_models;
} esp_ble_mesh_composition_head;

typedef struct {
    uint16_t model_id;
    uint16_t vendor_id;
} tsModel;

typedef struct {
    // reserve space for up to 20 SIG models
    uint16_t SIG_models[20];
    uint8_t numSIGModels;

    // reserve space for up to 4 vendor models
    tsModel Vendor_models[4];
    uint8_t numVendorModels;
} esp_ble_mesh_composition_decode;

int decode_comp_data(esp_ble_mesh_composition_head *head, esp_ble_mesh_
↪composition_decode *data, uint8_t *mystr, int size)
{
    int pos_sig_base;
    int pos_vnd_base;
    int i;

    memcpy(head, mystr, sizeof(*head));

    if(size < sizeof(*head) + head->sig_models * 2 + head->vnd_models *␣
↪4) {
```

(下页继续)

(续上页)

```
        return -1;
    }

    pos_sig_base = sizeof(*head) - 1;

    for(i = 1; i < head->sig_models * 2; i = i + 2) {
        data->SIG_models[i/2] = mystr[i + pos_sig_base] | (mystr[i + pos_
↪sig_base + 1] << 8);
        printf("%d: %4.4x\n", i/2, data->SIG_models[i/2]);
    }

    pos_vnd_base = head->sig_models * 2 + pos_sig_base;

    for(i = 1; i < head->vnd_models * 2; i = i + 2) {
        data->Vendor_models[i/2].model_id = mystr[i + pos_vnd_base] |␣
↪(mystr[i + pos_vnd_base + 1] << 8);
        printf("%d: %4.4x\n", i/2, data->Vendor_models[i/2].model_id);

        data->Vendor_models[i/2].vendor_id = mystr[i + pos_vnd_base + 2]␣
↪| (mystr[i + pos_vnd_base + 3] << 8);
        printf("%d: %4.4x\n", i/2, data->Vendor_models[i/2].vendor_id);
    }

    return 0;
}

void app_main(void)
{
    esp_ble_mesh_composition_head head = {0};
    esp_ble_mesh_composition_decode data = {0};
    uint8_t mystr[] = { 0x0C, 0x00, 0x1A, 0x00,
                        0x01, 0x00, 0x08, 0x00,
                        0x03, 0x00, 0x00, 0x01,
                        0x05, 0x01, 0x00, 0x00,
                        0x00, 0x80, 0x01, 0x00,
                        0x00, 0x10, 0x03, 0x10,
                        0x3F, 0x00, 0x2A, 0x00};
    int ret;

    ret = decode_comp_data(&head, &data, mystr, sizeof(mystr));
    if (ret == -1) {
        printf("decode_comp_data error");
    }
}
```

1.15 Provisioner 如何通过获取的 Composition Data 进一步配置节点？

Provisioner 通过调用*Configuration Client Model* API *esp_ble_mesh_config_client_set_state()* 来进行如下配置。

- 正确设置参数*esp_ble_mesh_cfg_client_set_state_t* 中的 app_key_add，将应用密钥添加到节点中。
- 正确设置参数*esp_ble_mesh_cfg_client_set_state_t* 中的 model_sub_add，将订阅地址添加到节点的模型中。
- 正确设置参数*esp_ble_mesh_cfg_client_set_state_t* 中的 model_pub_set，将发布地址添加到节点的模型中。

1.16 节点可以自己添加相应的配置吗？

本法可用于特殊情况，如测试阶段。

- 此示例展示了节点如何为自己的模型添加新的组地址。

```
esp_err_t example_add_fast_prov_group_address(uint16_t model_id, uint16_t␣
↪group_addr)
{
    const esp_ble_mesh_comp_t *comp = NULL;
    esp_ble_mesh_elem_t *element = NULL;
    esp_ble_mesh_model_t *model = NULL;
    int i, j;

    if (!ESP_BLE_MESH_ADDR_IS_GROUP(group_addr)) {
        return ESP_ERR_INVALID_ARG;
    }

    comp = esp_ble_mesh_get_composition_data();
    if (!comp) {
        return ESP_FAIL;
    }

    for (i = 0; i < comp->element_count; i++) {
        element = &comp->elements[i];
        model = esp_ble_mesh_find_sig_model(element, model_id);
        if (!model) {
            continue;
        }
        for (j = 0; j < ARRAY_SIZE(model->groups); j++) {
            if (model->groups[j] == group_addr) {
                break;
            }
        }
        if (j != ARRAY_SIZE(model->groups)) {
            ESP_LOGW(TAG, "%s: Group address already exists, element␣
↪index: %d", __func__, i);
            continue;
        }
        for (j = 0; j < ARRAY_SIZE(model->groups); j++) {
            if (model->groups[j] == ESP_BLE_MESH_ADDR_UNASSIGNED) {
                model->groups[j] = group_addr;
                break;
            }
        }
        if (j == ARRAY_SIZE(model->groups)) {
            ESP_LOGE(TAG, "%s: Model is full of group addresses, element␣
↪index: %d", __func__, i);
        }
    }

    return ESP_OK;
}
```

注解： 使能了节点的 NVS 存储器后，通过该方式添加的组地址以及绑定的应用密钥在设备掉电的情况下不能保存。这些配置信息只有通过 Configuration Client Model 配置时才会保存。

1.17 Provisioner 如何通过分组的方式控制节点？

通常而言，在 ESP-BLE-MESH 网络中实现组控制有两种方法，即组地址方法和虚拟地址方法。假设有 10 个设备，即 5 个带蓝灯的设备和 5 个带红灯的设备。

- 方案一：5 个蓝灯设备订阅一个组地址，5 个红灯设备订阅另一个组地址。Provisioner 往不同的组地址发送消息，即可实现分组控制设备。

- 方案二：5 个蓝灯设备订阅一个虚拟地址，5 个红灯设备订阅另一个虚拟地址，Provisioner 往不同的虚拟地址发送消息，即可实现分组控制设备。

1.18 Provisioner 如何将节点添加至多个子网？

节点配置期间，Provisioner 可以为节点添加多个网络密钥，拥有相同网络密钥的节点属于同一子网。Provisioner 可以通过不同的网络密钥与不同子网内的节点进行通信。

1.19 Provisioner 如何知道网络中的某个设备是否离线？

节点离线通常定义为：电源故障或其他原因导致的节点无法与 mesh 网络中的其他节点正常通信的情况。

ESP-BLE-MESH 网络中的节点间彼此不连接，它们通过广播通道进行通信。

此示例展示了如何通过 Provisioner 检测节点是否离线。

- 节点定期给 Provisioner 发送心跳包。如果 Provisioner 超过一定的时间未接收到心跳包，则视该节点离线。

注解： 心跳包的设计应该采用单包（字节数小于 11 个字节）的方式，这样收发效率会更高。

1.20 Provisioner 删除网络中的节点时，需要进行哪些操作？

通常而言，Provisioner 从网络中移除节点主要涉及三个步骤：

- 首先，Provisioner 将需要移除的节点添加至“黑名单”。
- 其次，Provisioner 启动*密钥更新程序*。
- 最后，节点执行节点重置程序，切换自身身份为未配网设备。

1.21 在密钥更新的过程中，Provisioner 如何更新节点的网络密钥？

- 通过正确设置参数`esp_ble_mesh_cfg_client_set_state_t` 中的 `net_key_update`，使用*Configuration Client Model* API `esp_ble_mesh_config_client_set_state()`，Provisioner 更新节点的网络密钥。
- 通过正确设置参数`esp_ble_mesh_cfg_client_set_state_t` 中的 `app_key_update`，使用*Configuration Client Model* API `esp_ble_mesh_config_client_set_state()`，Provisioner 更新节点的应用密钥。

1.22 Provisioner 如何管理 mesh 网络中的节点？

ESP-BLE-MESH 在示例中实现了一些基本的节点管理功能，比如 `esp_ble_mesh_store_node_info()`。ESP-BLE-MESH 还提供可用于设置节点本地名称的 API `esp_ble_mesh_provisioner_set_node_name()` 和可用于获取节点本地名称的 API `esp_ble_mesh_provisioner_get_node_name()`。

1.23 Provisioner 想要控制节点的服务器模型时需要什么？

Provisioner 在控制节点的服务器模型前，必须包括相应的客户端模型。

Provisioner 应当添加本地的网络密钥和应用密钥。

- Provisioner 调用 API `esp_ble_mesh_provisioner_add_local_net_key()` 以添加网络密钥。
- Provisioner 调用 API `esp_ble_mesh_provisioner_add_local_app_key()` 以添加应用密钥。

Provisioner 应当配置自己的客户端模型。

- Provisioner 调用 API *esp_ble_mesh_provisioner_bind_app_key_to_local_model()* 以绑定应用密钥至自己的客户端模型。

1.24 Provisoner 如何控制节点的服务器模型？

ESP-BLE-MESH 支持所有 SIG 定义的客户端模型。Provisioner 可以使用这些客户端模型控制节点的服务器模型。客户端模型分为 6 类，每类有相应的功能。

- Configuration Client Model
  - API *esp_ble_mesh_config_client_get_state()* 可用于获取 Configuration Server Model 的*esp_ble_mesh_cfg_client_get_state_t* 值。
  - API *esp_ble_mesh_config_client_set_state()* 可用于获取 Configuration Server Model 的*esp_ble_mesh_cfg_client_set_state_t* 值。
- Health Client Model
  - API *esp_ble_mesh_health_client_get_state()* 可用于获取 Health Server Model 的*esp_ble_mesh_health_client_get_state_t* 值。
  - API *esp_ble_mesh_health_client_set_state()* 可用于获取 Health Server Model 的*esp_ble_mesh_health_client_set_state_t* 值。
- Generic Client Models
  - API *esp_ble_mesh_generic_client_get_state()* 可用于获取 Generic Server Model 的*esp_ble_mesh_generic_client_get_state_t* 值。
  - API *esp_ble_mesh_generic_client_set_state()* 可用于获取 Generic Server Model 的*esp_ble_mesh_generic_client_set_state_t* 值。
- Lighting Client Models
  - API *esp_ble_mesh_light_client_get_state()* 可用于获取 Lighting Server Model 的*esp_ble_mesh_light_client_get_state_t* 值。
  - API *esp_ble_mesh_light_client_set_state()* 可用于获取 Lighting Server Model 的*esp_ble_mesh_light_client_set_state_t* 值。
- Sensor Client Models
  - API *esp_ble_mesh_sensor_client_get_state()* 可用于获取 Sensor Server Model 的*esp_ble_mesh_sensor_client_get_state_t* 值。
  - API *esp_ble_mesh_sensor_client_set_state()* 可用于获取 Sensor Server Model 的*esp_ble_mesh_sensor_client_set_state_t* 值。
- **Time and Scenes Client Models**
  - API *esp_ble_mesh_time_scene_client_get_state()* 可用于获取 Time and Scenes Server Model 的*esp_ble_mesh_time_scene_client_get_state_t* 值。
  - API *esp_ble_mesh_time_scene_client_set_state()* 可用于获取 Time and Scenes Server Model 的*esp_ble_mesh_time_scene_client_set_state_t* 值。

2. 节点开发

2.1 节点包含什么样的模型？

- ESP-BLE-MESH 中，节点由一系列的模型组成，每个模型实现节点的某些功能。
- 模型分为两种，客户端模型和服务器模型。客户端模型可以获取并设置服务器模型的状态。
- 模型也可以分为 SIG 模型和自定义模型。SIG 模型的所有行为都由官方定义，而自定义模型的行为均由用户定义。

2.2 每个模型对应的消息格式是不是固定的？

- 消息由 opcode 和 payload 组成，通过 opcode 进行区分。
- 与模型对应的消息的类型和格式都是固定的，这意味着模型之间传输的消息是固定的。

2.3 节点的模型可以使用哪些函数发送消息？

- 对于客户端模型，用户可以调用 API *esp_ble_mesh_client_model_send_msg()* 发送消息。
- 对于服务器模型，用户可以调用 API *esp_ble_mesh_server_model_send_msg()* 发送消息。
- 对于发布，用户可以调用 API *esp_ble_mesh_model_publish()* 发布消息。

2.4 如何实现消息传输不丢包？

如果用户要实现消息传输不丢包，则需有应答的消息。等待应答的默认时间在*CONFIG_BLE_MESH_CLIENT_MSG_TIMEOUT* 中设置。如果发送端等待应答超时，就会触发对应的超时事件。

注解： API *esp_ble_mesh_client_model_send_msg()* 中可以设置应答的超时时间。如果参数 `msg_timeout` 设为 **0**，那么超时时间便会采用默认值（4 秒）。

2.5 如何发送无应答的消息？

对于客户端模型，用户可以调用 API *esp_ble_mesh_client_model_send_msg()* with the parameter `need_rsp` set to `false` 发送无应答消息。

对于服务器模型，调用 API *esp_ble_mesh_server_model_send_msg()* 发送的消息总是无应答的消息。

2.6 如何为模型添加订阅地址？

通过 Configuration Client Model 添加订阅地址。

2.7 模型发送的消息和发布的消息有何不同？

调用 API *esp_ble_mesh_client_model_send_msg()* 或*esp_ble_mesh_server_model_send_msg()* 发送的消息会在 Network Transmit 状态规定的期限内发送。

调用 API *esp_ble_mesh_model_publish()* 发布的消息将由模型发布状态决定是否发布。消息的发布一般是周期性的，或者有固定次数。发布周期和发布次数由模型发布状态控制，并且可以通过 Configuration Client Model 进行配置。

2.8 发送不分包消息时，最多可携带多少有效字节？

不分包消息的总有效载荷长度（可由用户设置）为 11 个八位位组，因此，如果消息的 opcode 为 2 个八位位组，则该消息可以携带 9 个八位位组的有效信息。对于 vendor 消息，由于 opcode 是 3 个八位位组，剩余的有效负载长度为 8 个八位位组。

2.9 什么时候应该使能节点的 Relay 功能？

如果 mesh 网络中检测到的节点很稀疏，用户可以使能节点的 Relay 功能。

如果 mesh 网络中检测到的节点很密集，用户可以选择仅使能一些节点的 Relay 功能。

如果 mesh 网络大小未知，用户可以默认使能 Relay 功能。

2.10 什么时候应该使能节点的 Proxy 功能？

如果未配网设备将由电话配网，则未配网设备应该使能 Proxy 功能，因为当前几乎所有电话都不支持通过广播承载层发送 ESP-BLE-MESH 数据包。并且，未配网设备成功配网成为 Proxy 节点后，其会通过 GATT 承载层和广播承载层与 mesh 网络中的其他节点通信。

2.11 如何使用代理过滤器?

代理过滤器用于减少 Proxy Client（如手机）和 Proxy Server（如节点）之间交换的 Network PDU 的数量。另外，通过代理过滤器，Proxy Client 可以明确请求仅接收来自 Proxy Server 的某些目标地址的 mesh 消息。

2.12 Relay 节点什么时候可以中继消息？

如果要中继消息，消息需满足以下要求。

- 消息存在于 mesh 网络中。
- 消息的目的地址不是节点的单播地址。
- 消息的 TTL 值需大于 1。

2.13 如果一条消息分成几段，那么其他 Relay 节点是接收到一段消息就中继还是等接收到完整的数据包才中继？

Relay 节点收到其中一段消息时就中继，而非一直等到接收所有的消息。

2.14 使用 Low Power 功能降低功耗的原理是什么？

- 开启无线电进行收听时，设备消耗能量。使能节点的低功耗功能后，它将在大多数时间内关闭无线电功能。
- 低功耗节点和好友节点需要合作，因此低功耗节点可以以适当或较低的频率接收消息，而无需一直收听。
- 当低功耗节点有一些新消息时，好友节点将为其存储消息。低功耗节点可以间隔固定时间轮询好友节点，以查看是否有新的消息。

2.15 设备断电后上电，如何能继续在网络中进行通讯？

在 *menuconfig* 中启用配置 `Store BLE Mesh Node configuration persistently`。

2.16 如何实现将节点自检的信息发送出来？

推荐节点通过 Health Server Model 定期发布其自检结果。

2.17 节点间如何传输消息？

节点间传输信息的可能应用场景是，一旦烟雾警报检测到高浓度的烟雾，就会触发喷淋设备。有两种实现方法。

- 方法 1：喷淋设备订阅组地址。当烟雾警报器检测到高浓度的烟雾时，它会发布一条消息，该消息的目标地址是喷淋设备已订阅的组地址。
- 方法 2：Provisioner 可以配置喷淋设备的单播地址为烟雾报警器的地址。当检测到高浓度的烟雾时，烟雾警报器以喷淋设备的单播地址为目标地址，将消息发送到喷淋设备。

2.18 设备通信必须要网关吗？

- 情况 1：节点仅在 mesh 网络内通信。这种情况下，不需要网关。ESP-BLE-MESH 网络是一个泛洪的网络，网络中的消息没有固定的路径，节点与节点之间可以随意通信.
- 情况 2：如果用户想要远程控制网络，比如在到家之前打开某些节点，则需要网关。

2.19 何时使用 IV Update 更新程序？

一旦节点的底层检测到发送的消息的序列号达到临界值，IV Update 更新程序便会启用。

2.20 如何启用 IV Update 更新程序？

节点可以使用带有 Secure Network Beacon 的 IV Update 更新程序。

3. ESP-BLE-MESH 和 Wi-Fi 共存

3.1 Wi-Fi 和 ESP-BLE-MESH 共存时，支持哪些模式？

目前，只有 Wi-Fi STA 模式支持共存。

3.2 Wi-Fi 和 ESP-BLE-MESH 共存时，为什么 Wi-Fi 吞吐量很低？

未搭载 PSRAM 的 ESP32-DevKitC 开发板，Wi-Fi 和 ESP-BLE-MESH 共存可以正常运行，但是吞吐率较低。当 Wi-Fi 和 ESP-BLE-MESH 共存时，搭载 PSRAM 的 ESP32-DevKitC 速率可以稳定在 1 Mbps 以上。

应使能 menuconfig 中的一些配置来支持 PSRAM。

- `ESP32-specific --> Support for external,SPI-connected RAM --> Try to allocate memories of Wi-Fi and LWIP...`
- `Bluetooth --> Bluedriod Enable --> BT/BLE will first malloc the memory from the PSRAM`
- `Bluetooth --> Bluedriod Enable --> Use dynamic memory allocation in BT/BLE stack.`
- `Bluetooth --> Blutooth controller --> BLE full scan feature supported.`
- `Wi-Fi --> Software controls Wi-Fi/Bluetooth coexistence --> Wi-Fi`

4. 快速配网

4.1 为什么需要快速配网？

通常而言，存在少量未配网设备时，用户可以逐个配置。但是如果有大量未配网设备（比如 100 个）时，逐个配置会耗费大量时间。通过快速配网，用户可以在约 50 秒内配网 100 个未配网设备。

4.2 为什么会出现 EspBleMesh App 在快速配网期间长时间等待的情况？

快速配网期间，代理节点在配置完一个节点后会断开与 APP 的连接，待所有节点配网完成后再与 APP 重新建立连接。

4.3 为什么 APP 中显示的节点地址的数量比现有的节点地址更多？

每完成一次快速配网后、开始新一次快速配网前，APP 会存有上次配网的数据，因此 APP 中显示的节点地址的数量比现有的节点地址更多。

4.4 在 EspBleMesh App 中输入的 ** count ** 值有什么用途？

此 **count** 值提供给 App 配置的代理节点，以决定何时提前开始 Proxy 广播信息。

4.5 运行以下示例 fast_prov_server 的节点的 Configuration Client Model 何时开始工作？

使能了 Temporary Provisioner 功能后，Configuration Client Model 会开始工作。

4.6 Temporary Provisioner 功能会一直处于使能的状态吗？

节点收到打开/关闭电灯的消息后，所有节点会禁用其 Temporary Provisioner 功能并且转化为一般节点。

5. Log 帮助 当 ESP-BLE-MESH 协议栈底层出现错误或者警告时，您可以在这儿找到这些错误和警告的含义。

5.1 `ran out of retransmit attempts` 代表什么？

节点发送分段消息时，由于某些原因，接收端未收到完整的消息。节点会重传消息。当重传次数达到最大重传数时，会出现该警告，当前最大重传数为 4。

5.2 `Duplicate found in Network Message Cache` 代表什么？

当节点收到一条消息时，它会把该消息与网络缓存中存储的消息进行比较。如果在缓存中找到相同的消息，这意味着之前已接受过该消息，则该消息会被丢弃。

5.3 `Incomplete timer expired` 代表什么？

当节点在一定时间段（比如 10 秒）内未收到分段消息的所有段时，则 Incomplete 计时器到时，并且出现该警告。

5.4 `No matching TX context for ack` 代表什么？

当节点收到一个分段 ack 且不能找到任何自己发送的与该 ack 相关的消息时，会出现该警告。

5.5 `No free slots for new incoming segmented messages` 代表什么？

当节点没有空间来接收新的分段消息时，会出现该警告。用户可以通过配置*CONFIG_BLE_MESH_RX_SEG_MSG_COUNT* 扩大空间。

5.6 `Model not bound to AppKey 0x0000` 代表什么？

当节点发送带有模型的消息且该模型尚未绑定到索引为 0x000 的应用密钥时，会出现该报错。

5.7 `Busy sending message to DST xxxx` 代表什么？

该错误表示节点的客户端模型已将消息发送给目标节点，并且正在等待响应，用户无法将消息发送到单播地址相同的同一节点。接收到相应的响应或计时器到时后，可以发送另一条消息。

6. 示例帮助

6.1 ESP-BLE-MESH 回调函数如何分类？

- API *esp_ble_mesh_register_prov_callback()* 用于注册处理配网和入网相关事件的回调函数。
- API *esp_ble_mesh_register_config_client_callback()* 用于注册处理 Configuration Client Model 相关事件的回调函数。
- API *esp_ble_mesh_register_config_server_callback()* 用于注册处理 Configuration Server Model 相关事件的回调函数。
- API *esp_ble_mesh_register_health_client_callback()* 用于注册处理 Health Client Model 相关事件的回调函数。
- API *esp_ble_mesh_register_health_server_callback()* 用于注册处理 Health Server Model 相关事件的回调函数。

- API *esp_ble_mesh_register_generic_client_callback()* 用于注册处理 Generic Client Models 相关事件的回调函数。
- API *esp_ble_mesh_register_light_client_callback()* 用于注册处理 Lighting Client Models 相关事件的回调函数。
- API *esp_ble_mesh_register_sensor_client_callback()* 用于注册处理 Sensor Client Model 相关事件的回调函数。
- API *esp_ble_mesh_register_time_scene_client_callback()* 用于注册处理 Time and Scenes Client Models 相关事件的回调函数。
- API *esp_ble_mesh_register_custom_model_callback()* 用于注册处理自定义模型和未实现服务器模型的相关事件的回调函数。

7. 其他

7.1 如何打印数据包？

示例使用如下函数 `ESP_LOG_BUFFER_HEX()` 打印信息语境，而 ESP-BLE-MESH 协议栈使用 `bt_hex()` 打印。

7.2 重启 ESP32 应使用哪个 API？

API *esp_restart()*.

7.3 如何监测任务栈的剩余空间？

API *vTaskList()* 可以用于定期打印任务栈的剩余空间。

7.4 如何在不更改 menuconfig 输出级别的情况下改变 log 级别？

无需使用 menuconfig，可以通过 API *esp_log_level_set()* 修改 log 的输出级别。

ESP-BLE-MESH Terminology

表 12: 表 1 ESP-BLE-MESH 术语 - 身份

术语	官方定义	详细说明
未配网设备	“A device that is not a member of a mesh network is known as an unprovisioned device.”	示例：照明装置、温控设备、制造设备和电动门等。
节点	“A node is a provisioned device.”	经配网加入 ESP-BLE-MESH 网络后，未配网设备的身份转变成节点。节点（如照明装置、温控设备、制造设备和电动门）是指能在蓝牙 ESP-BLE-MESH 网络中发送、接收或中继消息的设备，且节点可以选择性地支持一个或多个子网。
中继节点	“A node that supports the Relay feature and has the Relay feature enabled is known as a Relay node.”	中继节点接收并中继 ESP-BLE-MESH 消息，因此消息可以传输得更远。用户可以根据节点的状态来决定是否使能节点的中继功能。消息可以中继多次，每次中继为“一跳”，消息最多可有 126 跳，足以让消息在广阔的区域内传输。
代理节点	“A node that supports the Proxy feature and has the Proxy feature enabled is known as a Proxy node.”	代理节点从一个承载层（通常包括广播承载层和 GATT 承载层）接收消息，并通过另一个承载层重新发送消息。其目的是将只支持 GATT 承载层的通讯设备接入到 ESP-BLE-MESH 网络中。通常而言，手机 App 需要一个代理节点才能接入 Mesh 网络。没有代理节点，手机 App 无法与 Mesh 网络中成员通信。
好友节点	“A node that supports the Friend feature, has the Friend feature enabled, and has a friendship with a node that supports the Low Power feature is known as a Friend node.”	好友节点相当于低功耗节点（LPN）的备份，可存储发往低功耗节点的消息及安全更新信息；当低功耗节点需要这些存储的信息时，这些信息便会被传输至低功耗节点。低功耗节点必须与支持好友特性的另一节点建立“友谊”，以减少其接收器的占空比，从而降低低功耗节点的功耗。低功耗节点需要找到好友节点，与其建立友谊关系，其中涉及的过程称为“友谊建立”。低功耗节点与好友节点的搭配可让低功耗节点规划对无线电的使用，从而以适当或较低的频率接收消息，无需保持收听状态。低功耗节点会轮询好友节点以查看是否有新的消息。
低功耗节点	“A node that supports the Low Power feature and has a friendship with a node that supports the Friend feature is known as a Low Power node.”	低功耗节点通过轮询从好友节点获取信息，比如消息、安全更新等。
启动配置设备（以下称为 Provisioner）	“A node that is capable of adding a device to a mesh network.”	能够配网未配网设备的设备称为启动配置设备。这一流程通常需要通过产品制造商的提供的 App 来实现，并可在网关、智能手机、平板电脑和其他载体上使用。

表 13: 表 2 ESP-BLE-MESH 术语 - 节点构成

术语	官方定义	详细说明
状态	“A value representing a condition of an element that is exposed by an element of a node.”	ESP-BLE-MESH 网络中的每台设备都具有一组独立的状态值，表示设备的某些状态，比如照明设备的亮度、颜色等状态。更改状态值会修改设备本身的物理状态，比如更改设备的开关状态值实际是在打开或关闭设备。
模型	“A model defines the basic functionality of a node.”	一个节点可能包含多个模型，而每个模型定义了节点的基本功能，比如节点所需要的状态、控制状态的消息以及处理消息所产生的动作等。节点功能的实现是基于模型的，模型可分为 SIG 模型和自定义模型，前者由 SIG 定义，而后者由用户定义。
元素	“An addressable entity within a device.”	一个节点可以包含一个或多个元素，每个元素都有一个单播地址和一个或多个模型，并且同一元素所包含的模型不可以出现重复。
节点构成状态	“The Composition Data state contains information about a node, the elements it includes, and the supported models.”	通过读取节点构成状态的值，用户可以了解节点的基本信息，比如元素的数量及每个元素中的模型。Provisioner 通过获取这个消息对设备进一步配置，比如配置节点的订阅地址与发布地址。

表 14: 表 3 ESP-BLE-MESH 术语 - 特性

术语	官方定义	详细说明
低功耗特性	“The ability to operate within a mesh network at significantly reduced receiver duty cycles only in conjunction with a node supporting the Friend feature.”	低功耗功能可降低节点的功耗。当低功耗节点寻找好友节点、且附近有多个好友节点时，它会通过算法选择最适合的好友节点。
好友特性	“The ability to help a node supporting the Low Power feature to operate by storing messages destined for those nodes.”	通过使能好友特性，节点可以帮助存储低功耗节点的信息。使能了好友特性的节点可能会产生更大的功耗和内存消耗。
中继特性	“The ability to receive and retransmit mesh messages over the advertising bearer to enable larger networks.”	中继特性能让 ESP-BLE-MESH 的消息在节点之间实现多次跳跃，传输距离可超过两个节点之间直接进行无线电传输的范围，从而覆盖整个网络。使能了中继特性的节点中继消息时，只中继其所在子网的消息，不中继其它子网的消息。使能了中继特性的节点中继分段消息时不考虑数据的完整性。节点每收到一条分段消息便直接中继，不会等待收到完整的消息。
代理特性	“The ability to receive and retransmit mesh messages between GATT and advertising bearers.”	代理特性的目的是允许不具备广播承载层的节点访问 ESP-BLE-MESH 网络。代理特性通常为需要和手机 App 连接的节点所用。

表 15: 表 4 ESP-BLE-MESH 术语 - 配置入网

术语	官方定义	详细说明
PB-ADV	“PB-ADV is a provisioning bearer used to provision a device using Generic Provisioning PDUs over the advertising channels.”	PB-ADV 通过广播通道传输配网过程中产生的数据包。只有 Provisioner 和未配网设备都支持 PB-ADV 时才可使用这种方法进行配网。
PB-GATT	“PB-GATT is a provisioning bearer used to provision a device using Proxy PDUs to encapsulate Provisioning PDUs within the Mesh Provisioning Service.”	PB-GATT 通过连接通道传输配网过程中产生的数据包。如果未配网设备想使用此方式进行配网，其需要实现相关的 Mesh Provisioning Service。未实现此服务的未配网设备不能通过 PB-GATT 承载层配网接入 mesh 网络。
配置入网	“Provisioning is a process of adding an unprovisioned device to a mesh network, managed by a Provisioner.”	经过配网，“未配网设备”的身份转变为“节点”，成为 ESP-BLE-MESH 网络中的一员。
认证方式	“Authentication is a step during the provisioning of nodes.”	未配网设备有四种认证方法：输入带外 (Input OOB)、输出带外 (Output OOB)、静态带外 (Static OOB) 和无带外 (No OOB)。
输入带外 (Input OOB)	Input Out-of-Band	比如，Provisioner 生成并显示随机数，然后提示用户采取适当操作将随机数输入未配网的设备中。以照明开关为例，用户可以在一定时间内数次按下按钮，以这种形式输入 Provisioner 端显示的随机数。输入带外认证方法与输出带外的认证方法类似，但设备的角色相反。
输出带外 (Output OOB)	Output Out-of-Band	比如，未配网设备会选择一个随机数，并通过与其功能兼容的方式输出该数字。如果未配网设备是一个灯泡，则其能够闪烁指定的次数。如果未配网设备有 LCD 屏幕，则可以将随机数显示为多位数值。启动 Provisioner 的用户需要输入观察到的数字，来认证未配网的设备。
静态带外 (Static OOB)	Static Out-of-Band	静态 OOB 的认证方法：使用静态 OOB 信息。如果需要使用无 OOB 信息，请将静态 OOB 字段赋值为 0。如果需要使用 OOB 信息，请使用静态 OOB 信息认证正在配网的设备。
无带外 (No OOB)	No Out-of-Band	无 OOB 的认证方法：将“静态 OOB”字段赋值为 0。采用这种方式相当于不认证未配网的设备。

表 16: 表 5 ESP-BLE-MESH 术语 - 地址

术语	官方定义	详细说明
未分配地址	“This is a special address type, with a value of 0x0000. Its use indicates that an Element has not yet been configured or had a Unicast Address assigned to it.”	未配置的元素地址或未分配的元素地址都称为未分配地址。鉴于这些元素没有固定的地址，它们不会用于消息的传输。建议在设置用户代码的地址之前，将该地址的值设为未分配地址。
单播地址	“A unicast address is a unique address allocated to each element.”	在配网期间，Provisioner 会给网络中处于生命周期内节点的每个元素分配一个单播地址。单播地址可能会出现在消息的源/目标地址字段中。发送到单播地址的消息只能由拥有该单播地址的元素进行处理。
虚拟地址	“A virtual address represents a set of destination addresses. Each virtual address logically represents a Label UUID, which is a 128-bit value that does not have to be managed centrally.”	虚拟地址与特定的 UUID 标签相关联，可以用作模型的发布地址或订阅地址。UUID 标签是与一个或多个节点的元素相关联的 128 位值。虚拟地址的第 15 位和第 14 位分别设置为 1 和 0。从第 13 位到第 0 位设置为散列值（提供 16384 个散列值）。散列是 UUID 标签的派生。使用订阅元素检查完整的 128 位 UUID 十分低效，而散列值提供了一种更有效的方法来确定最终将哪些消息发送到哪些元素。
群组地址	“A group address is an address that is programmed into zero or more elements.”	群组地址是 ESP-BLE-MESH 网络中的另一种多播地址，通常用于将节点进行分组。发送到 all-proxies 地址的信息应由启用了代理功能的所有节点的主要元素处理。发送到 all-friends 地址的消息应由启用了好友功能的所有节点的主要元素处理。发送到 all-relays 地址的消息应由启用了中继功能的所有节点的主要元素处理。发送到 all-nodes 地址的消息应由所有节点的主要元素处理。

表 17: 表 6 ESP-BLE-MESH 术语 - 安全

术语	官方定义	详细说明
设备密钥 (DevKey)	“There is also a device key, which is a special application key that is unique to each node, is known only to the node and a Configuration Client, and is used to secure communications between the node and a Configuration Client.”	设备密钥让您能够配网未配网设备、配置节点。设备密钥用来加密配置信息，即配置设备时 Provisioner 和节点之间传输的消息。
应用密钥 (AppKey)	“Application keys are used to secure communications at the upper transport layer.”	应用密钥用于应用数据传递至应用层过程中对应用数据的解密，和应用层下发过程中对数据的加密。网络中的一些节点有特定的用途，并且可以根据应用程序的需求对一些潜在敏感数据的访问进行限制。通过特定的应用密钥，这些节点与特定应用程序相关联。通常而言，使用不同应用密钥的领域有安全（楼宇门禁、机房门禁和 CEO 办公室门禁）、照明（工厂、外部楼宇和人行道）和 HVAC 系统。应用密钥绑定在网络密钥上，这意味着应用密钥仅在绑定网络密钥的情况下使用。每一个应用密钥仅可绑定到一个网络密钥。
主安全资料	“The master security material is derived from the network key (NetKey) and can be used by other nodes in the same network. Messages encrypted with master security material can be decoded by any node in the same network. “	使用好友安全材料加密的相应友谊消息有：1. 好友轮询 (Friend Poll)，2. 好友更新 (Friend Update)，3. 好友订阅列表 (Friend Subscription List)，添加/删除/确认，4. 好友节点发送到低功耗节点的“已存储消息”，使用主安全材料加密的相应友谊消息有：1. 好友清除 (Friend Clear)，2. 好友清除确认 (Friend Clear Confirm)。根据应用程序的设置，从低功耗节点发送到好友节点的消息会使用友谊安全材料或主安全材料进行加密，前者用于低功耗节点与好友节点之间的消息传输，而后者用于其他网络消息。

表 18: 表 7 ESP-BLE-MESH 术语 - 消息

术语	官方定义	详细说明
重组 / 分包	“Segmentation and reassembly (SAR) is a method of communication network, which is divided into small units before transmitting packets and reassembled in a proper order at the communication receiving end.”	底层传输层会自动分包过大的消息。接收端会回复一条应答消息，根据应答消息，发送端会重新向接收端发送其未接收到的数据包。这些都是底层传输层自动完成的。未分包的消息最多携带 15 个字节，其中 4 个字节是 transMIC，所以剩余 11 个字节；在分包的情况下，前面的包中每包有 12 个有效字节，最后一个包中有 8 个有效字节。特殊情况：一个较短的包需要底层传输端强制分包，这种情况下有 8 个有效字节。
无应答 / 有应答	“There are two types of messages: Unacknowledged or Acknowledged.”	根据接收端是否需要发送应答消息，发送的消息可分为两种。发送端需要设置最大重传次数。

表 19: 表 8 ESP-BLE-MESH 术语 - 基础模型

术语	官方定义	详细说明
Configuration Server Model	“This model is used to represent a mesh network configuration of a device.”	节点必须包含 Configuration Server Model，其负责维护配置相关的状态。Configuration Server Model 维护的状态包含：网络密钥名单 (NetKey List)、应用密钥名单 (AppKey List)、模型绑定的应用密钥名单 (Model to AppKey List)、节点身份 (Node Identity)、密钥更新阶段 (Key Refresh Phase)、心跳消息发布 (Heartbeat Publish)、心跳消息订阅 (Heartbeat Subscription)、网络传输 (Network Transmit) 和中继重传 (Relay Retransmit) 等。
Configuration Client Model	“The model is used to represent an element that can control and monitor the configuration of a node.”	Configuration Client Model 通过消息控制 Configuration Server Model 维护的状态。Provisioner 必须包含 Configuration Client Model，有了该模型才可发送“Configuration Composition Data Get” 等配置消息。
Health Server Model	“This model is used to represent a mesh network diagnostics of a device.”	Health Server Model 主要用于设备检查自身状态，查看自身是否发生错误。Health Server model 维护的状态包含：当前故障 (Current Fault)、已登记故障 (Registered Fault)、健康周期 (Health Period) 和关注计时器 (Attention Timer)。
Health Client Model	“The model is used to represent an element that can control and monitor the health of a node.”	Health Client Model 通过消息控制 Health Server Model 维护的状态。该模型可通过消息 “Health Fault Get” 获取其他节点的自检信息。

表 20: 表 9 ESP-BLE-MESH 术语 - 网络管理

术语	官方定义	详细说明
密钥更新程序	“This procedure is used when the security of one or more network keys and/or one or more of the application keys has been compromised or could be compromised.”	密钥更新程序用于更新 ESP-BLE-MESH 网络的网络密钥和应用密钥。当一个或多个网络密钥和/或一个或多个应用密钥的安全受到威胁或可能受到威胁时，会启动密钥更新程序。通常而言，在网络中某些节点移除后可以进行密钥更新。
IV 更新程序	“A node can also use an IV Update procedure to signal to peer nodes that it is updating the IV Index.”	IV 更新程序用于更新 ESP-BLE-MESH 网络的 IV Index 的值，这个值和消息加密时所需的随机数相关。为了保证随机数的值不重复，所以将这个值定期增加。IV Index 是一个 32 位的值，是一种共享网络资源，比如一个 mesh 网中的所有节点共享一个 IV Index 值。IV Index 从 0x00000000 开始，在 IV 更新过程中递增，并由特定的进程维护，以保证整个 Mesh 网内共享一个 IV Index。当节点认为它有耗尽其序列号的风险，或它确定另一个节点即将耗尽其序列号时，可以启动该程序。注意：每次的更新时间不得低于 96 小时。节点接收到 secure network beacon 或者确定自己的序列号大于特定值时，会触发 IV 更新程序。

官方定义摘自 ESP-BLE-MESH Glossary of Terms. 查看更多术语，也请参照上述网址。

蓝牙 SIG 文档

- BLE Mesh Profile Specification
- BLE Mesh Model Specification
- An Intro to Bluetooth Mesh Part 1 / Part 2
- The Fundamental Concepts of Bluetooth Mesh Networking, Part 1 / Part 2
- Bluetooth Mesh Networking: Friendship
- Management of Devices in a Bluetooth Mesh Network
- Bluetooth Mesh Security Overview
- Provisioning a Bluetooth Mesh Network Part 1 / Part 2

4.10 ESP-MESH

本指南提供有关 ESP-MESH 协议的介绍。更多有关 API 使用的信息，请见*MESH API 参考*。

4.10.1 概述

ESP-MESH 是一套建立在 Wi-Fi 协议之上的网络协议。ESP-MESH 允许分布在大范围区域内（室内和室外）的大量设备（下文称节点）在同一个 WLAN（无线局域网）中相互连接。ESP-MESH 具有自组网和自修复的特性，也就是说 mesh 网络可以自主地构建和维护。

本 ESP-MESH 指南分为以下几个部分：

1. 简介
2. *ESP-MESH* 概念
3. 建立网络
4. 管理网络
5. 数据传输
6. 信道切换
7. 性能
8. 更多注意事项

4.10.2 简介

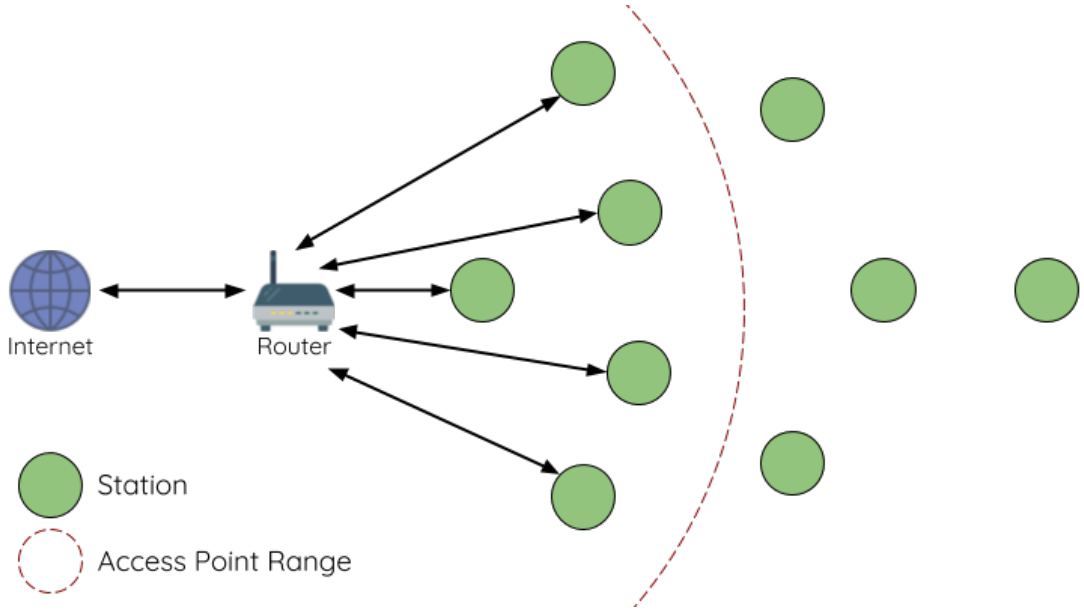

图 16: 传统 Wi-Fi 网络架构

传统基础设施 Wi-Fi 网络是一个“单点对多点”的网络。这种网络架构的中心节点为接入点 (AP)，其他节点 (station) 均与 AP 直接相连。其中，AP 负责各个 station 之间的仲裁和转发，一些 AP 还会通过路由器与外部 IP 网络交换数据。在传统 Wi-Fi 网络架构中，1）由于所有 station 均需与 AP 直接相连，不能距离 AP 太远，因此覆盖区域相对有限；2）受到 AP 容量的限制，因此网络中允许的 station 数量相对有限，很容易超载。

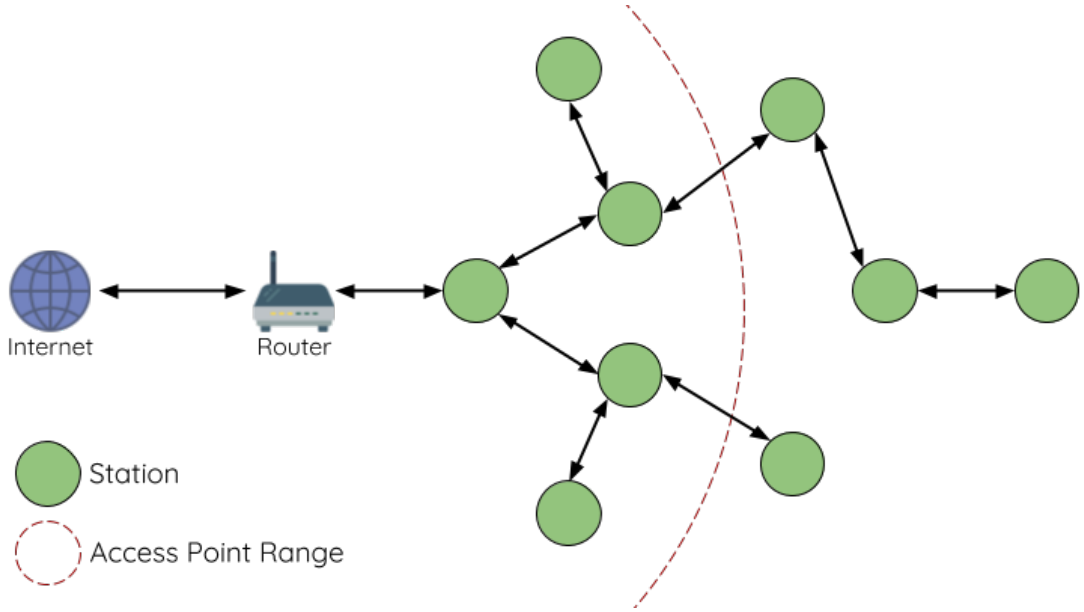

图 17: ESP-MESH 网络架构示意图

ESP-MESH 与传统 Wi-Fi 网络的不同之处在于：网络中的节点不需要连接到中心节点，而是可以与相邻节点连接。各节点均负责相连节点的数据中继。由于无需受限于距离中心节点的位置，所有节点仍可互连，因此 ESP-MESH 网络的覆盖区域更广。类似地，由于不再受限于中心节点的容量限制，ESP-MESH 允许更多节点接入，也不易于超载。

4.10.3 ESP-MESH 概念

术语

术语	描述
节点	任何 **属于**或 **可以成为** ESP-MESH 网络一部分的设备
根节点	网络顶部的节点
子节点	如节点 X 连接至节点 Y，且 X 相较 Y 与根节点的距离更远（跨越的连接数量更多），则称 X 为 Y 的子节点。
父节点	与子节点对应的概念
后裔节点	任何可以从根节点追溯到的节点
兄弟节点	连接至同一个父节点的所有节点
连接	AP 和 station 之间的传统 Wi-Fi 关联。ESP-MESH 中的节点使用 station 接口与另一个节点的 SoftAP 接口产生关联，进而形成连接。连接包括 Wi-Fi 网络中的身份验证和关联过程。
上行连接	从节点到其父节点的连接
下行连接	从父节点到其一个子节点的连接
无线 hop	源节点和目标节点间无线连接路径中的一部分。**单跳**指遍历单个连接的数据包，**多跳**指遍历多个连接的数据包。
子网	子网指 ESP-MESH 网络的一部分，包括一个节点及其所有后代节点。因此，根节点的子网包括 ESP-MESH 网络中的所有节点。
MAC 地址	在 ESP-MESH 网络中用于区别每个节点或路由器的唯一地址
DS	分布式系统（外部 IP 网络）

树型拓扑

ESP-MESH 建立在传统 Wi-Fi 协议之上，可被视为一种将多个独立 Wi-Fi 网络组合为一个单一 WLAN 网络的组网协议。在 Wi-Fi 网络中，station 在任何时候都仅限于与 AP 建立单个连接（上行连接），而 AP 则可以同时连接到多个 station（下行连接）。然而，ESP-MESH 网络则允许节点同时充当 station 和 AP。因此，ESP-MESH 中的节点可以使用 **其 SoftAP 接口建立多个下行连接**，同时使用 **其 station 接口建立一个上行连接**。这将自然产生一个由多层父子结构组成的树型网络拓扑结构。

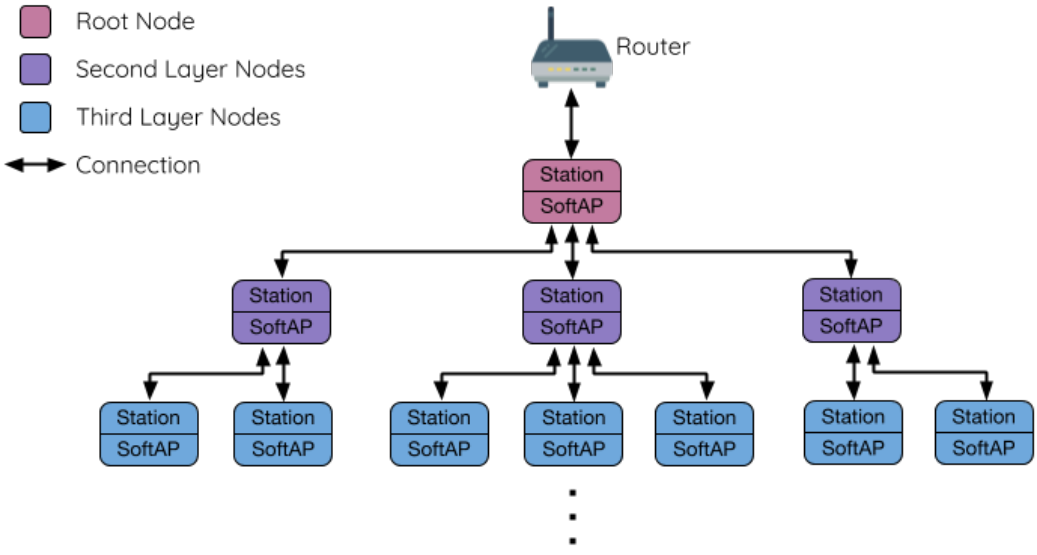

图 18: ESP-MESH 树型拓扑

ESP-MESH 是一个多跳网络，也就是说网络中的节点可以通过单跳或多跳向网络中的其他节点传送数据包。因此，ESP-MESH 中的节点不仅传输自己的数据包，而且同时充当其他节点的中继。假设 ESP-MESH

网络中的任意两个节点存在物理层上连接（通过单跳或多跳），则这两个节点可以进行通信。

注解： ESP-MESH 网络中的大小（节点总数）取决于网络中允许的最大层级，以及每个节点可以具有的最大下行连接数。因此，这两个变量可用于配置 ESP-MESH 网络的大小。

节点类型

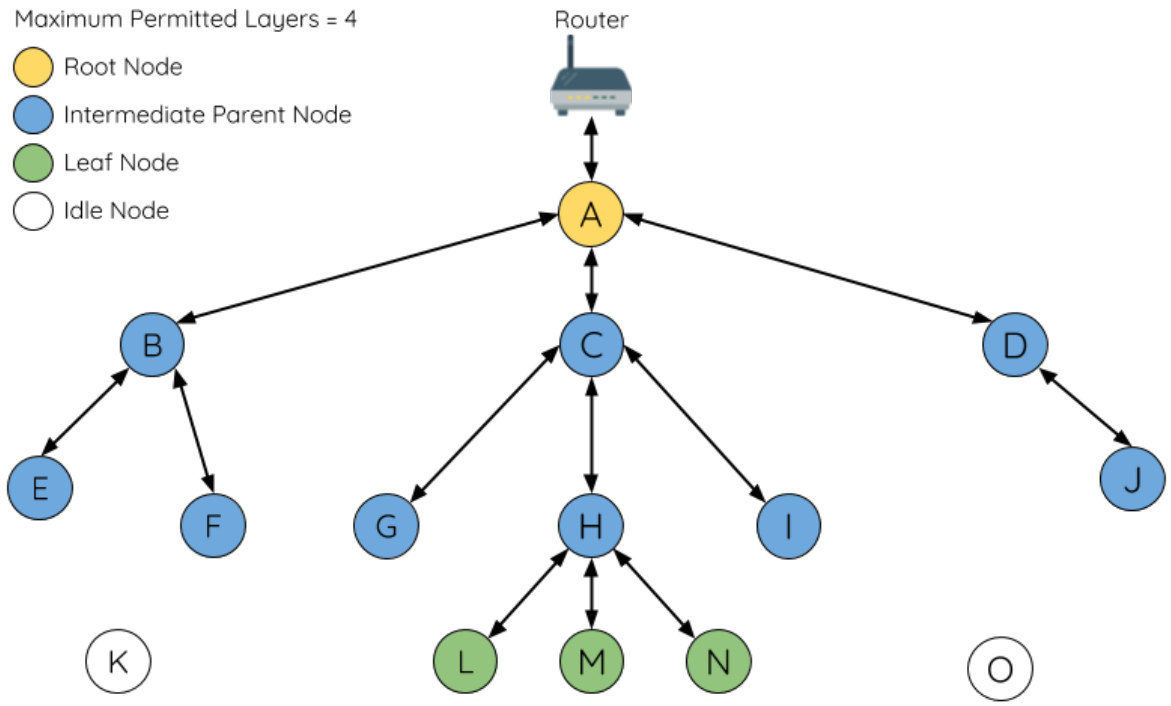

图 19: ESP-MESH 节点类型

根节点：指网络顶部的节点，是 ESP-MESH 网络和外部 IP 网络之间的唯一接口。根节点直接连接至传统的 Wi-Fi 路由器，并在 ESP-MESH 网络的节点和外部 IP 网络之间中继数据包。**ESP-MESH 网络中只能有一个根节点**，且根节点的上行连接只能是路由器。如上图所示，节点 A 即为该 ESP-MESH 网络的根节点。

叶子节点：指不允许拥有任何子节点（即无下行连接）的节点。因此，叶子节点只能传输或接收自己的数据包，但不能转发其他节点的数据包。如果节点处于 ESP-MESH 网络的最大允许层级，则该节点将成为叶子节点。叶子节点不回再产生下行连接，这可以防止节点继续生成下行连接，从而确保网络层级不会超出限制。由于建立下行连接必须使用 SoftAP 接口，因此一些没有 SoftAP 接口的节点（仅有 station 接口）也将被分配为叶子节点。如上图所示，位于网络最外层的 L/M/N 节点即为叶子节点。

中间父节点：既不是属于根节点也不属于叶子节点的节点即为中间父节点。中间父节点必须有且仅有一个上行连接（即一个父节点），但可以具有 0 个或多个下行连接（即 0 个或多个子节点）。因此，中间父节点可以发送和接收自己的数据包，也可以转发其上行和下行连接的数据包。如上图所示，节点 B 到 J 即为中间父节点。**注意，E/F/G/I/J 等没有下行连接的中间父节点并不等同于叶子节点**，原因在于这些节点仍允许形成下行连接。

空闲节点：尚未加入网络的节点即为空闲节点。空闲节点将尝试与中间父节点形成上行连接，或者在有条件的情况下（参见*自动根节点选择*）成为一个根节点。如上图所示，K 和 O 节点即为空闲节点。

信标帧和 RSSI 阈值

ESP-MESH 中能够形成下行连接的每个节点（即具有 SoftAP 接口）都会定期传输 Wi-Fi 信标帧。节点可以通过信标帧让其他节点检测自己的存在和状态。空闲节点将侦听信标帧以生成一个潜在父节点列表，并与其中一个潜在父节点形成上行连接。ESP-MESH 使用“供应商信息元素”来存储元数据，例如：

- 节点类型（根节点、中间父节点、叶子节点、空闲节点）
- 节点当前所处的层级
- 网络中允许的最大层级
- 当前子节点数量
- 可接受的最大下行连接数量

潜在上行连接的信号强度可由潜在父节点信标帧的 RSSI 表示。为了防止节点形成弱上行连接，ESP-MESH 采用了针对信标帧的 RSSI 阈值控制机制。如果节点检测到某节点的信标帧 RSSI 过低（即低于预设阈值），则会在尝试形成上行连接时忽略该节点。

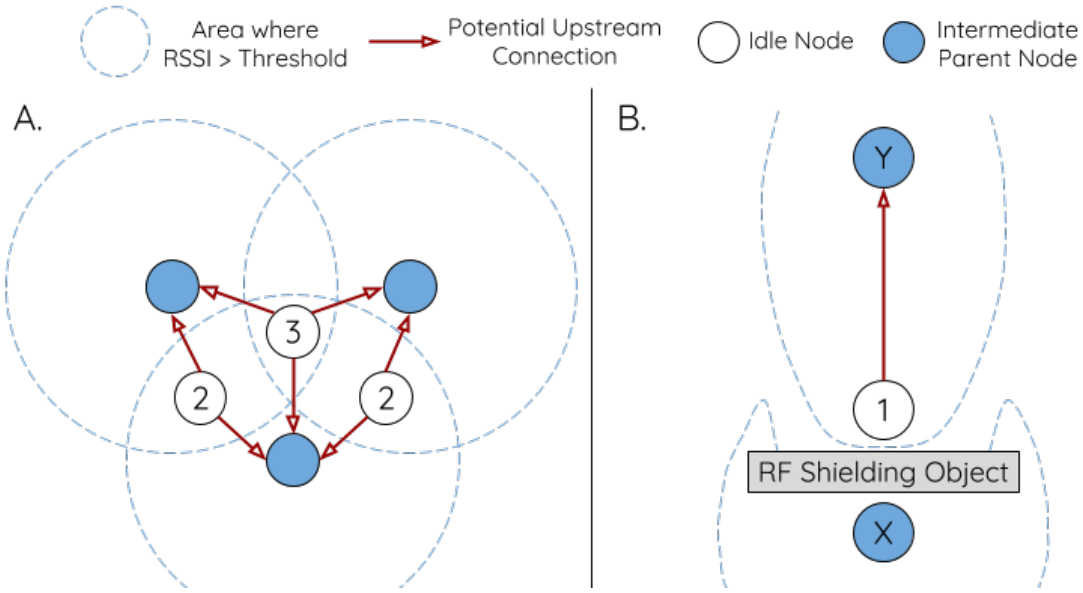

图 20: RSSI 阈值的影响

上图（A 侧） 展示了 RSSI 阈值将如何影响空闲节点的候选父节点数量。

上图（B 侧） 展示了 RF 屏蔽物将如何降低潜在父节点的 RSSI。由于存在 RF 屏蔽物，节点 X 的 RSSI 高于阈值的区域显著减小。这会导致空闲节点忽略节点 X，即使从地理位置上看 X 就在空闲节点附近。相反，该空闲节点将从更远的地方找到一个 RSSI 更强的节点 Y 形成上行连接。

注解： 事实上，ESP-MESH 网络中的节点在 MAC 层仍可以接收所有的信标帧，但 RSSI 阈值控制功能可以过滤掉所有 RSSI 低于预设阈值的信标帧。

首选父节点

当一个空闲节点有多个候选父节点（潜在父节点）时，空闲节点将与其中的 **首选父节点**形成上行连接。首选父节点基于以下条件确定：

- 候选父节点所处的层级
- 候选父节点当前具有的下行连接（子节点）数量

在网络中所处层级较浅的候选父节点（包括根节点）将优先成为首选父节点。这有助于在形成上行连接时控制 ESP-MESH 网络中的总层级使之最小。例如，在位于第二层和第三层的候选父节点间选择时，位于第二层的候选父节点将始终优先成为首选父节点。

如果同一层上存在多个候选父节点，则子节点最少的候选父节点将优先成为首选父节点。这有助于平衡同一层节点的下行连接数量。

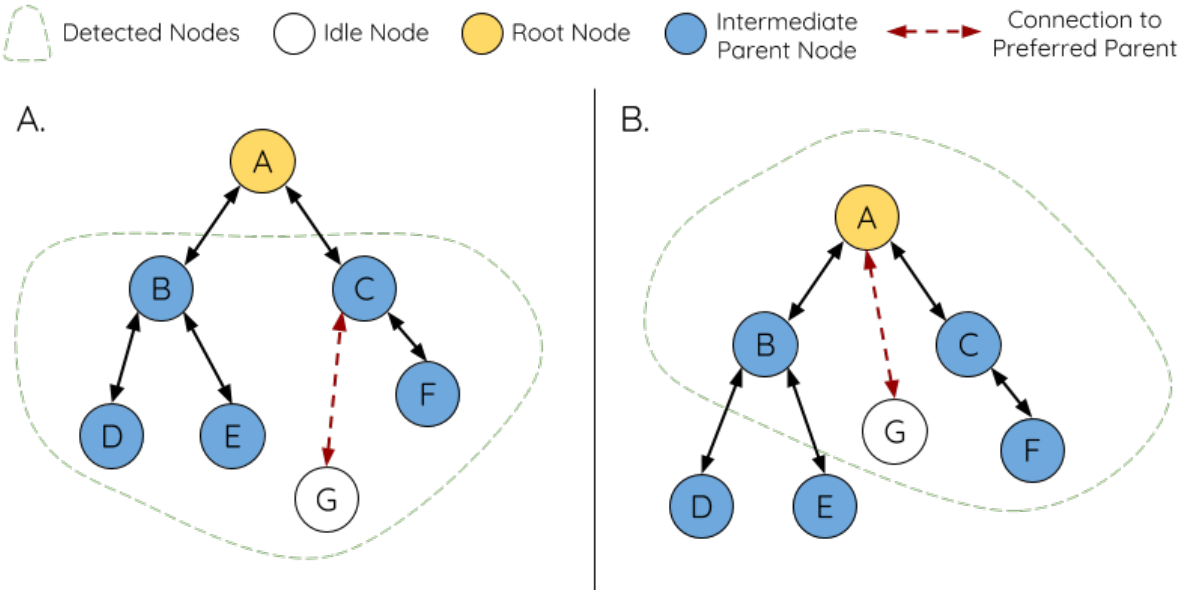

图 21: 首选父节点选择

上图（A 侧） 展示了空闲节点 G 如何在 B/C/D/E/F 五个候选父节点中选择首选父节点：首先，B/C 节点优于 D/E/F 节点，因为这两个节点所处的层级更浅。其次，C 节点优于 B 节点，因为 C 节点的下行连接数量（子节点数量）更少。

上图（B 侧） 展示了空闲节点 G 如何在根节点 A 和其他候选父节点中选择首选父节点，此时根节点 A 处于空闲节点 G 范围之内（即空闲节点 G 接收到的根节点 A 信标帧 RSSI 强度高于预设阈值）：由于根节点 A 处于网络中最浅的层，因此将成为首选父节点。

注解： 用户还可以自行定义首选父节点的选择规则，也可以直接指定某个节点为首选父节点（见 Mesh 手动配网示例 ）。

路由表

ESP-MESH 网络中的每个节点均会维护自己的路由表，并按路由表将数据包（请见*ESP-MESH 数据包*）沿正确的路线发送至正确的目标节点。某个特定节点的路由表将包含 **该节点的子网中所有节点的 MAC 地址**，也包括该节点自己的 MAC 地址。每个路由表会划分为多个子路由表，与每个子节点的子网对应。

以上图为例，节点 B 的路由表中将包含节点 B 到节点 I 的 MAC 地址（即相当于节点 B 的子网）。节点 B 的路由表可划分为节点 C 和 G 的子路由表，分别包含节点 C 到节点 F 的 MAC 地址、节点 G 到节点 I 的 MAC 地址。

ESP-MESH 利用路由表来使用以下规则进行转发，确定 ESP-MESH 数据包应根据向上行转发还是向下行转发。

1. 如果数据包的目标 MAC 地址处于当前节点的路由表中且不是当前节点本身，则选择包含目标 MAC 地址的子路由表，并将数据包向下转发给子路由表对应的子节点。

2. 如果数据包的目标 MAC 地址不在当前节点的路由表内，则将数据包向上转发给当前节点的父节点，并重复执行该操作直至数据包达到目标地址。此步骤可重复至根节点（根节点包含整个网络的全部节点）。

注解： 用户可以通过调用`esp_mesh_get_routing_table()` 获取一个节点的路由表，调用`esp_mesh_get_routing_table_size()` 获取一个路由表的大小，也可

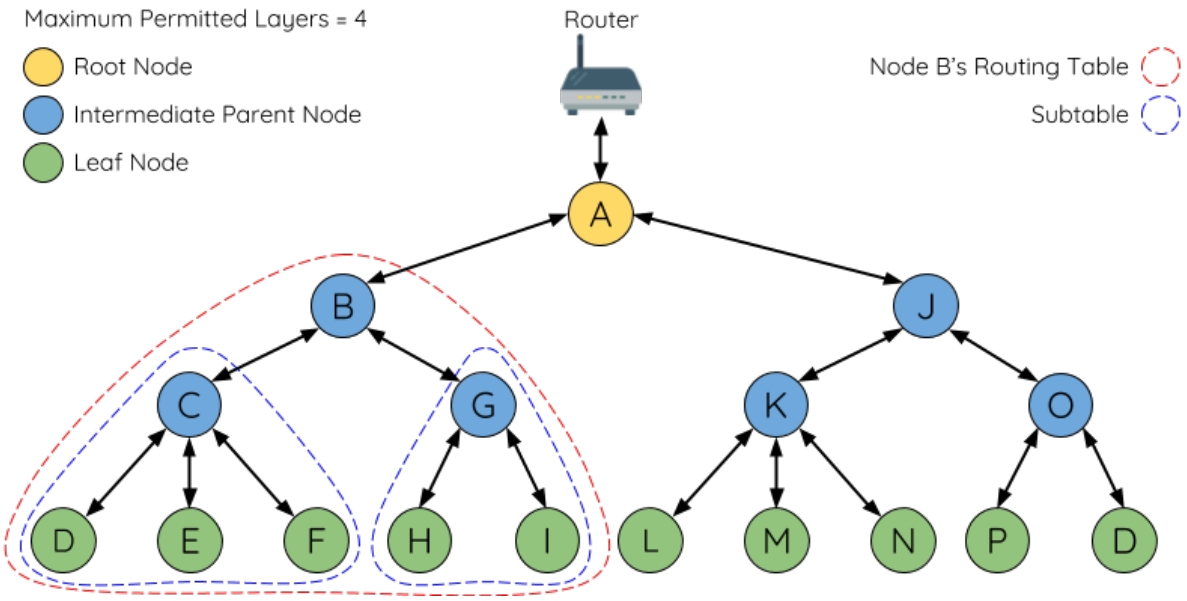

图 22: ESP-MESH 路由表示例

通过调用*esp_mesh_get_subnet_nodes_list()* 获取某个子节点的子路由表，调用*esp_mesh_get_subnet_nodes_num()* 获取子路由表的大小。

4.10.4 建立网络

一般过程

警告： ESP-MESH 正式开始构建网络前，必须确保网络中所有节点具有相同的配置（见*mesh_cfg_t*）。每个节点必须配置 **相同 MESH 网络 ID、路由器配置和 SoftAP 配置**。

ESP-MESH 网络将首先选择根节点，然后逐层形成下行连接，直到所有节点均加入网络。网络的布局可能取决于诸如根节点选择、父节点选择和异步上电复位等因素。但简单来说，一个 ESP-MESH 网络的构建过程可以概括为以下步骤：

1. 根节点选择 根节点直接进行指定（见*用户指定根节点*）或通过选举由信号强度最强的节点担任（见*自动根节点选择*）。一旦选定，根节点将与路由器连接，并开始允许下行连接形成。如上图所示，节点 A 被选为根节点，因此节点 A 上行连接到路由器。

2. 第二层形成 一旦根节点连接到路由器，根节点范围内的空闲节点将开始与根节点连接，从而形成第二层网络。一旦连接，第二层节点成为中间父节点（假设最大允许层级大于 2 层），并进而形成下一层。如上图所示，节点 B 到节点 D 都在根节点的连接范围内。因此，节点 B 到节点 D 将与根节点形成上行连接，并成为中间父节点。

3. 其余层形成 剩余的空闲节点将与所处范围内的中间父节点连接，并形成新的层。一旦连接，根据网络的最大允许层级，空闲节点成为中间父节点或叶子节点。此后重复该步骤，直到网络中的所有空闲节点均加入网络或达到网络最大允许层级。如上图所示，节点 E/F/G 分别与节点 B/C/D 连接，并成为中间父节点。

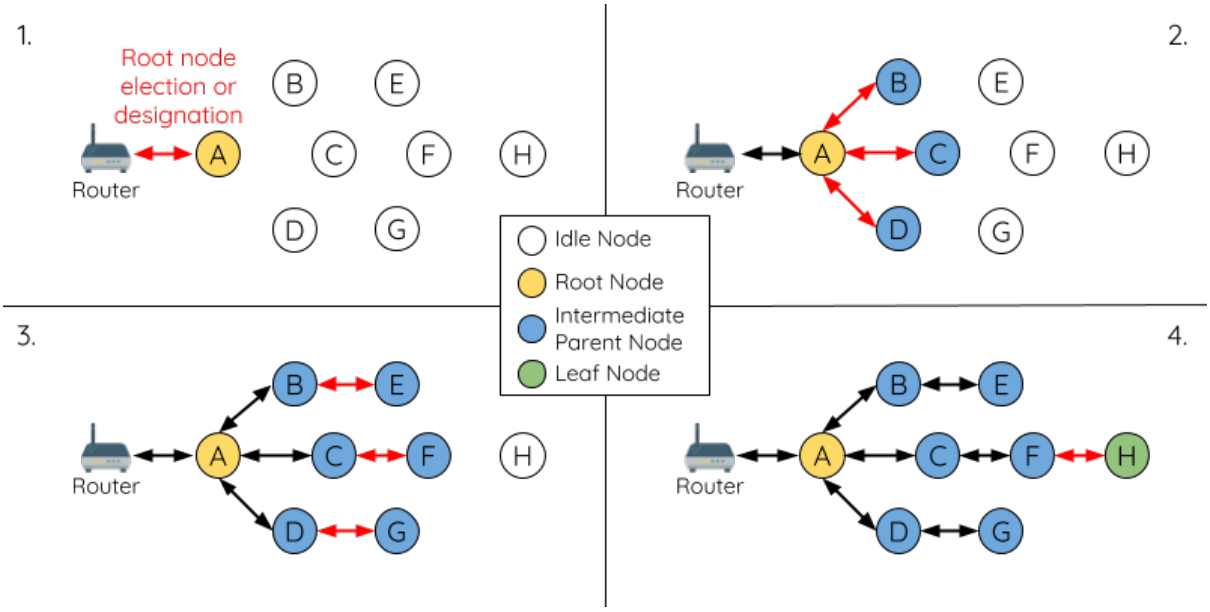

图 23: ESP-MESH 网络构建过程

4. 限制树深度 为了防止网络超过最大允许层级，最大允许层级上的节点将在完成连接后成为叶子节点。这样一来，其他空闲节点将无法与这些最大允许层上的叶子节点形成连接，因此不会超过最大允许层级。然而，如果空闲节点无法找到其他潜在父节点，则将无限期地保持空闲状态。如上图所示，网络的最大允许层级为四。因此，节点 H 在完成连接后将成为叶子节点，以防止任何下行连接的形成。

自动根节点选择

在自动模式下，根节点的选择取决于相对于路由器的信号强度。每个空闲节点将通过 Wi-Fi 信标帧发送自己的 MAC 地址和路由器 RSSI 值。**MAC 地址可以表示网络中的唯一节点**，而 **路由器 RSSI 值**代表相对于路由器的信号强度。

此后，每个节点将同时扫描来自其他空闲节点的信标帧。如果节点检测到具有更强的路由器 RSSI 的信标帧，则节点将开始传输该信标帧的内容（相当于为这个节点投票）。经过最小迭代次数（可预先设置，默认为 10 次）将选举出路由器 RSSI 值最强的信标帧。

在达到预设迭代次数后，每个节点将单独检查其 **得票百分比**（得票数/总票数）以确定它是否应该成为根节点。**如果节点的得票百分比大于预设的阈值（默认为 90%），则该节点将成为根节点**。

下图展示了在 ESP-MESH 网络中，根节点的自动选择过程。

1. 上电复位时，每个节点开始传输自己的信标帧（包括 MAC 地址和路由器 RSSI 值）。

2. 在多次传输和扫描迭代中，路由器 RSSI 最强的信标帧将在整个网络中传播。节点 C 具有最强的路由器 RSSI 值 (-10 dB)，因此它的信标帧将在整个网络中传播。所有参与选举的节点均给节点 C 投票，因此节点 C 的得票百分比为 100%。因此，节点 C 成为根节点，并与路由器连接。

3. 一旦节点 C 与路由器连接，节点 C 将成为节点 A/B/D/E 的首选父节点（即最浅的节点），并与这些节点连接。节点 A/B/D/E 将形成网络的第二层。

4. 节点 F 和节点 G 分别连接节点 D 和节点 E，并完成网络构建过程。

注解： 用户可以通过 `esp_mesh_set_attempts()` 配置选举的最小迭代次数。用户应根据网络内的节点数量配置迭代次数（即 mesh 网络越大，所需的迭代次数越高）。

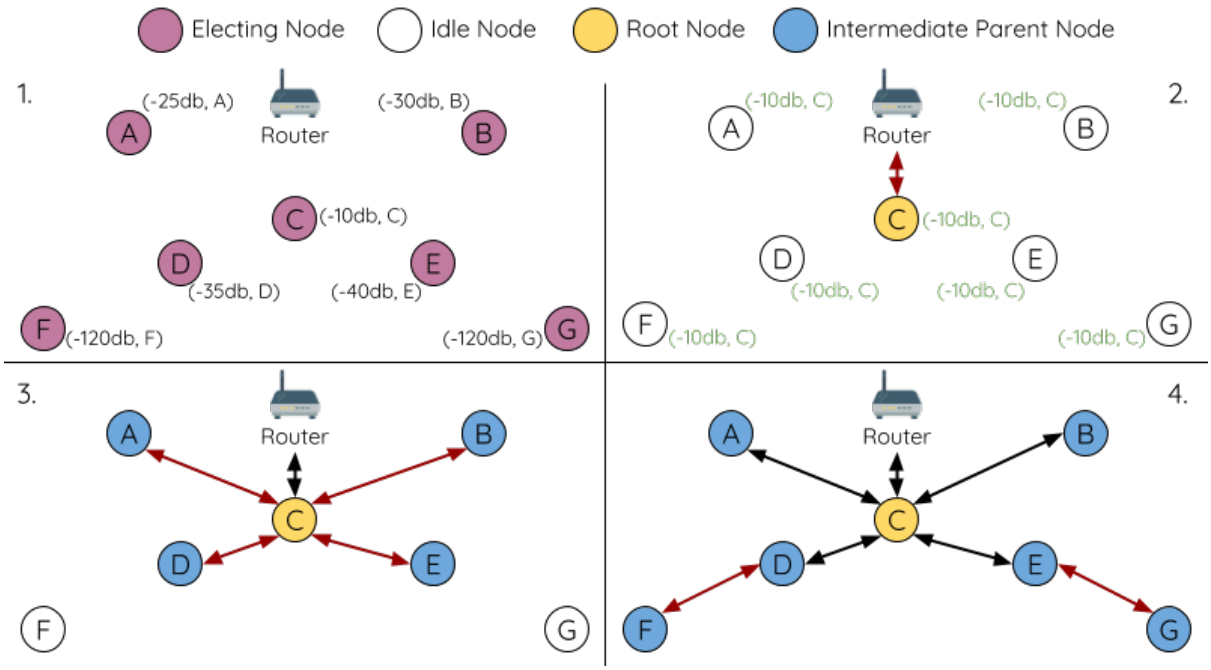

图 24: 根节点选举示例

警告： **得票百分比阈值**也可以使用`esp_mesh_set_vote_percentage()`进行配置。得票百分比阈值过低 **可能导致同一 mesh 网络中两个或多个节点成为根节点**，进而分化为多个 mesh 网络。如果发生这种情况，ESP-MESH 具有内部机制，可自主解决 **根节点冲突**。这些具有多个根节点的网络将围绕一个根节点形成一个网络。然而，两个或多个路由器 SSID 相同但路由器 BSSID 不同的根节点冲突尚无法解决。

用户指定根节点

根节点也可以由用户指定，即直接让指定的根节点与路由器连接，并放弃选举过程。当根节点指定后，网络内的所有其他节点也必须放弃选举过程，以防止根节点冲突的发生。下图展示了在 ESP-MESH 网络中，根节点的手动选择过程。

1. 节点 A 是由用户指定的根节点，因此直接与路由器连接。此时，所有其他节点放弃选举过程。

2. 节点 C 和节点 D 将节点 A 选为自己的首选父节点，并与其形成连接。这两个节点将形成网络的第二层。

3. 类似地，节点 B 和节点 E 将与节点 C 连接，节点 F 将与节点 D 连接。这三个节点将形成网络的第三层。

4. 节点 G 将与节点 E 连接，形成网络的第四层。然而，由于该网络的最大允许层级已配置为 4，因此节点 G 将成为叶子节点，以防止形成任何新层。

注解： 一旦指定根节点，该根节点应调用`esp_mesh_set_parent()`使其直接与路由器连接。类似地，所有其他节点都应该调用`esp_mesh_fix_root()`放弃选举过程。

选择父节点

默认情况下，ESP-MESH 具有可以自组网的特点，也就是每个节点都可以自主选择与其形成上行连接的潜在父节点。自主选择出的父节点被称为首选父节点。用于选择首选父节点的标准旨在减少 ESP-MESH 网络的层级，并平衡各个潜在父节点的下行连接数（参见首选父节点）。

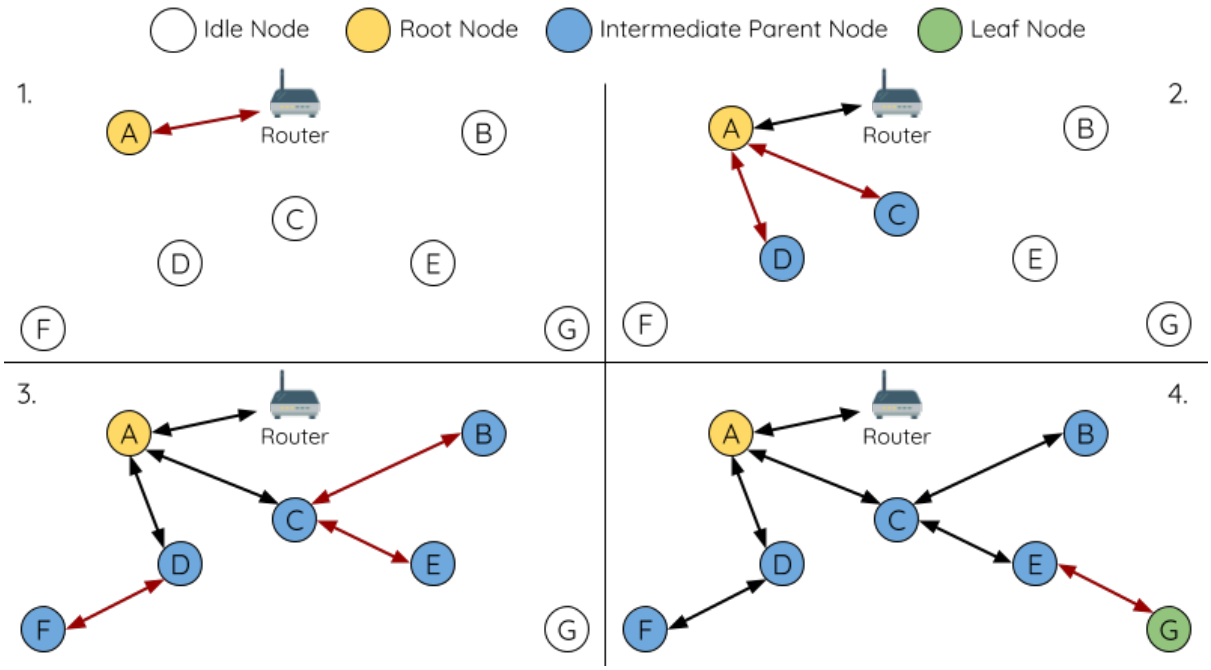

图 25: 根节点指定示例（根节点 = A，最大层级 = 4)

不过，ESP-MESH 也允许用户禁用自组网功能，即允许用户自己定义父节点选择标准，或直接指定某个节点为父节点（见：Mesh 手动组网示例 ）。

异步上电复位

ESP-MESH 网络构建可能会受到节点上电顺序的影响。如果网络中的某些节点为异步上电（即相隔几分钟上电），**网络的最终结构可能与所有节点同步上电时的理想情况不同**。延迟上电的节点将遵循以下规则：

规则 1：如果网络中已存在根节点，则延迟节点不会尝试选举成为新的根节点，即使自身的路由器 RSSI 更强。相反，延迟节点与任何其他空闲节点无异，将通过与首选父节点连接来加入网络。如果该延迟节点为用户指定的根节点，则网络中的所有其他节点将保持空闲状态，直到延迟节点完成上电。

规则 2：如果延迟节点形成上行连接，并成为中间父节点，则后续也可能成为其他节点（即其他更浅的节点）的新首选父节点。此时，其他节点切换上行连接至该延迟节点（见父节点切换）。

规则 3：如果空闲节点的指定父节点上电延迟了，则该空闲节点在没有找到指定父节点前不会尝试形成任何上行连接。空闲节点将无限期地保持空闲，直到其指定的父节点上电完成。

下方示例展示了异步上电对网络构建的影响。

1. 节点 A/C/D/F/G/H 同步上电，并通过广播其 MAC 地址和路由器 RSSI 开始选举根节点。节点 A 的 RSSI 最强，因此当选为根节点。

2. 一旦节点 A 成为根节点，其余的节点就开始与其首选父节点逐层形成上行连接，并最终形成一个具有五层的网络。

3. 节点 B/E 由于存在上电延迟，因此即使路由器 RSSI 比节点 A 更强（-20 dB 和 -10 dB）也不会尝试成为根节点。相反，这两个上电延迟节点均将与对应的首选父节点 A 和 C 形成上行连接。加入网络后，节点 B/E 均将成为中间父节点。

4. 节点 B 由于所处层级变化（现为第二层）而成为新的首选父节点，因此节点 D/G 将切换其上行连接从而选择新的首选父节点。由于切换的发生，最终的网络层级从原来的五层减少至三层。

同步上电：如果所有节点均同步上电，节点 E （-10 dB）由于路由器 RSSI 最强而成为根节点。此时形成的网络结构将与异步上电的情况截然不同。**但是，如果用户手动切换根节点，则仍可以达到同步上电的网络结构**（请见`esp_mesh_waive_root()`）。

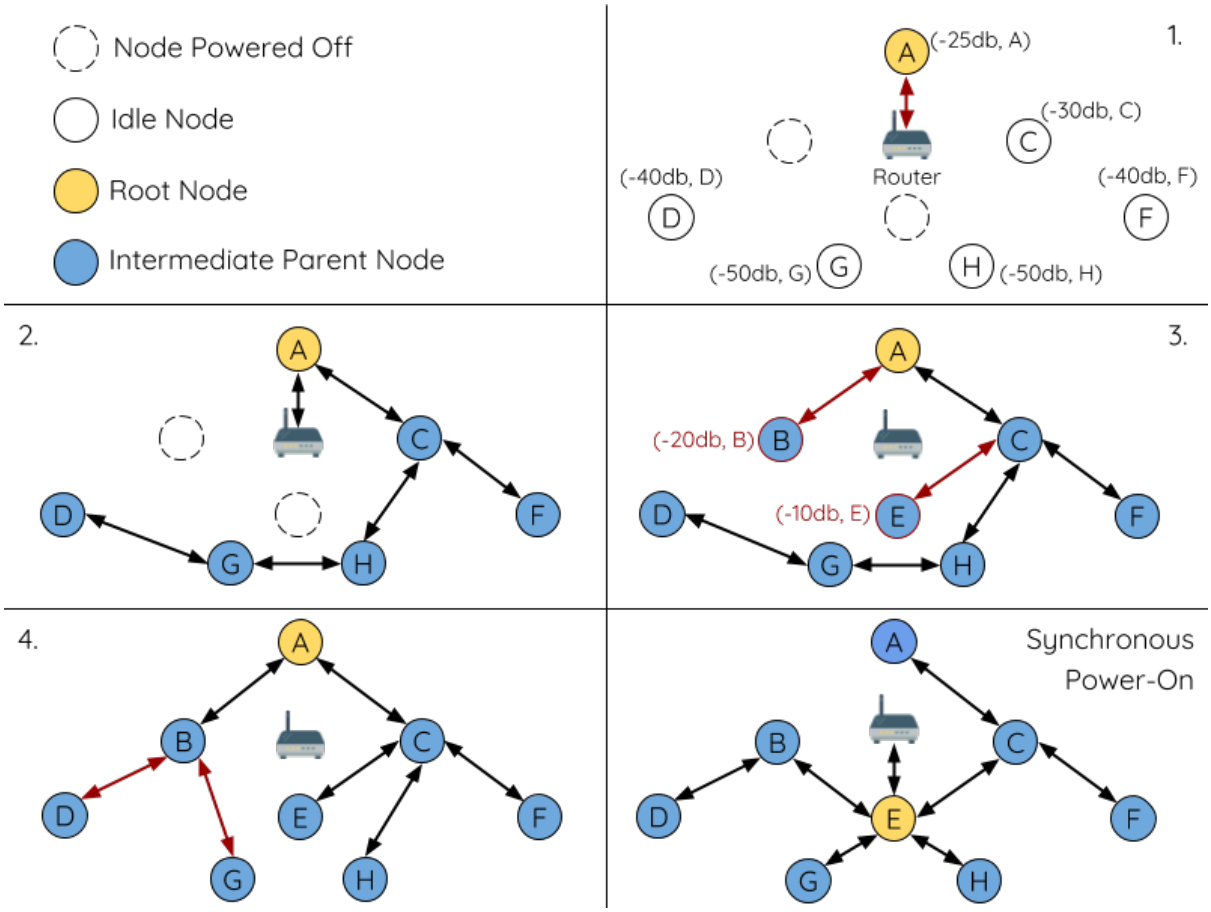

图 26: 网络构建（异步电源）示例

注解： 从某种程度上，ESP-MESH 可以自动修复部分因异步上电引起的父节点选择的偏差（请见父节点切换）

环路避免、检测和处理

环路是指特定节点与其后代节点（特定节点子网中的节点）形成上行连接的情况。因此产生的循环连接路径将打破 mesh 网络的树型拓扑结构。ESP-MESH 的节点在选择父节点时将主动排除路由表（见路由表）中的节点，从而避免与其子网中的节点建立上行连接并形成环路。

在存在环路的情况下，ESP-MESH 可利用路径验证机制和能量传递机制来检测环路的产生。因与子节点建立上行连接而导致环路形成的父节点将通知子节点环路的存在，并主动断开连接。

4.10.5 管理网络

作为一个自修复网络，ESP-MESH 可以检测并修正网络路由中的故障。当具有一个或多个子节点的父节点断开或父节点与其子节点之间的连接不稳定时，会发生故障。ESP-MESH 中的子节点将自主选择一个新的父节点，并与其形成上行连接，以维持网络互连。ESP-MESH 可以处理根节点故障和中间父节点故障。

根节点故障

如果根节点断开，则与其连接的节点（第二层节点）将及时检测到该根节点故障。第二层节点将主动尝试与根节点重连。但是在多次尝试失败后，第二层节点将启动新一轮的根节点选举。**第二层中 RSSI 最强的节点将当选为新的根节点**，而剩余的第二层节点将与新的根节点（如果不在范围内的话，也可与相邻父节点连接）形成上行连接。

如果根节点和下面多层的节点（例如根节点、第二层节点和第三层节点）同时断开，则位于最浅层的仍在正常工作的节点将发起根节点选举。下方示例展示了网络从根节点断开故障中进行自修复。

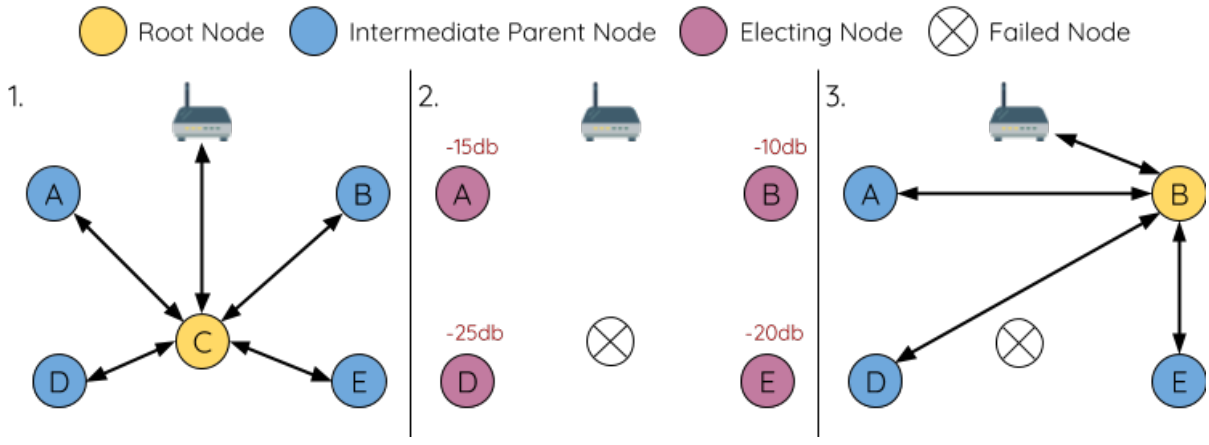

图 27: 根节点故障的自修复示意

1. 节点 C 是网络的根节点。节点 A/B/D/E 是连接到节点 C 的第二层节点。

2. 节点 C 断开。在多次重连尝试失败后，第二层节点开始通过广播其路由器 RSSI 开始新一轮的选举。此时，节点 B 的路由器 RSSI 最强。

3. 节点 B 被选为根节点，并开始接受下行连接。剩余的第二层节点 A/D/E 形成与节点 B 的上行连接，因此网络已经恢复，并且可以继续正常运行。

注解： 如果是手动指定的根节点断开，则无法进行自动修复。**任何节点不会在存在指定根节点的情况下开始选举过程**。

中间父节点故障

如果中间父节点断开，则与之断开的子节点将主动尝试与该父节点重连。在多次重连尝试失败后，每个子节点开始扫描潜在父节点（请见信标帧和 *RSSI* 阈值）。

如果存在其他可用的潜在父节点，每个子节点将分别给自己选择一个新的首选父节点（请见首选父节点），并与它形成上行连接。如果特定子节点没有其他潜在的父节点，则将无限期地保持空闲状态。

下方示例展示了网络从中间父节点断开故障中进行自修复。

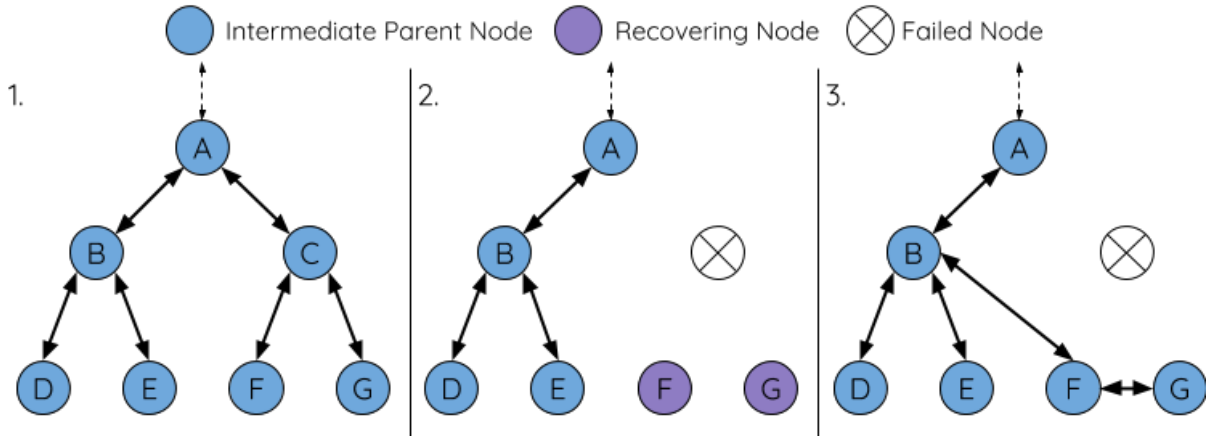

图 28: 中间父节点故障的自修复

1. 网络中存在节点 A 至 G。

2. 节点 C 断开。节点 F/G 检测到节点 C 的断开故障，并尝试与节点 C 重新连接。在多次重连尝试失败后，节点 F/G 将开始选择新的首选父节点。

3. 节点 G 因其范围内不存在任何父节点而暂时保持空闲。节点 F 的范围中有 B 和 E 两个节点，但节点 B 因为所处层级更浅而当选新的父节点。节点 F 将与节点 B 连接后，并成为一个中间父节点，节点 G 将于节点 F 相连。这样一来，网络已经恢复了，但结构发生了变化（网络层级增加了 1 层）。

注解： 如果子节点的父节点已被指定，则子节点不会尝试与其他潜在父节点连接。此时，该子节点将无限期地保持空闲状态。

根节点切换

除非根节点断开，否则 ESP-MESH 不会自动切换根节点。即使根节点的路由器 RSSI 降低至必须断开的情况，根节点也将保持不变。根节点切换是指明确启动新选举过程的行为，即具有更强路由器 RSSI 的节点选为新的根节点。这可以用于应对根节点性能降低的情况。

要触发根节点切换，当前根节点必须明确调用`esp_mesh_waive_root()`以触发新的选举。当下根节点将指示网络中的所有节点开始发送并扫描信标帧（见自动根节点选择），**但与此同时一直保持联网（即不会变为空闲节点）**。如果另一个节点收到的票数超过当前根节点，则将启动根节点切换过程，**否则根节点将保持不变**。

新选出的根节点向当前的根节点发送 **切换请求**，而原先的根节点将返回一个应答通知，表示已经准备好切换。一旦接收到应答，新选出的根节点将与其父节点断开连接，并迅速与路由器形成上行连接，进而

成为网络的新根节点。原先的根节点将断开与路由器的连接，**并与此同时保持其所有下行连接**并进入空闲状态。之前的根节点将开始扫描潜在的父节点并选择首选父节点。

下图说明了根节点切换的示例。

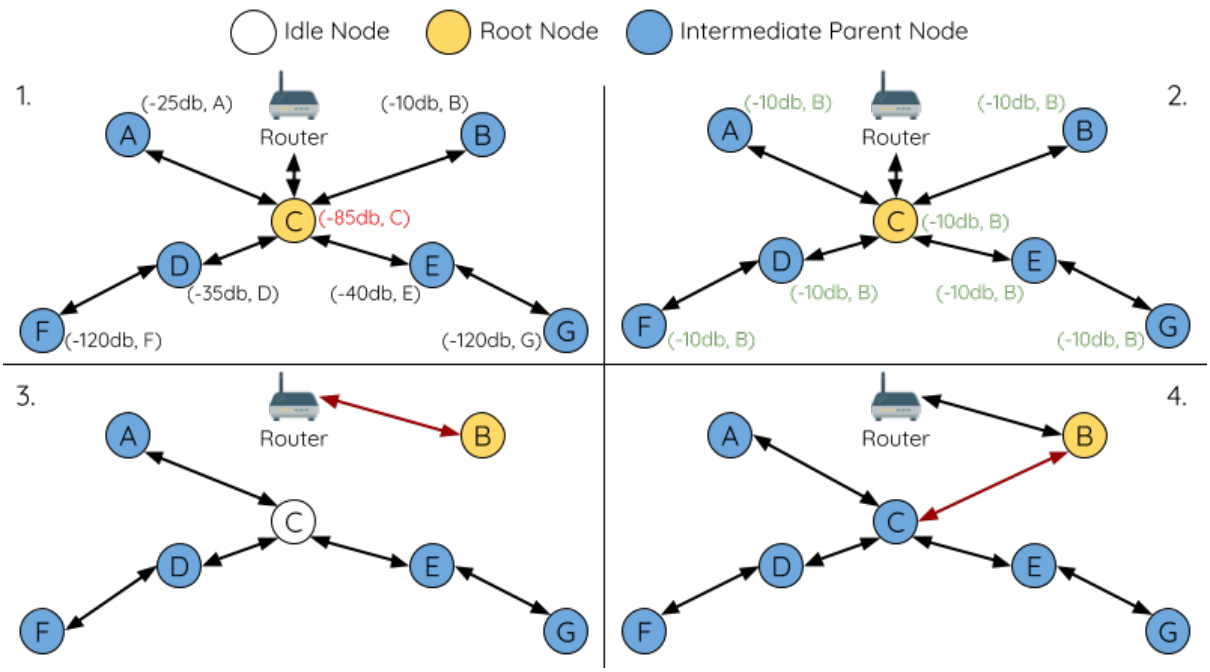

切换根节点示例

1. 节点 C 是当前的根节点，但路由器 RSSI 值 (-85 dB) 降低至较低水平。此时，新的选举过程被触发了。所有节点开始传输和扫描信标帧（**此时仍保持连接**）。

2. 经过多轮传输和扫描后，节点 B 被选为新的根节点。节点 B 向节点 C 发送了一个 **切换请求**，节点 C 回复一个应答。

3. 节点 B 与其父节点断开连接，并与路由器连接，成为网络中的新根节点。节点 C 与路由器断开连接，进入空闲状态，并开始扫描并选择新的首选父节点。**节点 C 在整个过程中仍保持其所有的下行连接**。

4. 节点 C 选择节点 B 作为其的首选父节点，与之形成上行连接，并成为一个第二层节点。由于节点 C 仍保持相同的子网，因此根节点切换后的网络结构没有变化。然后，由于切换的发生，节点 C 子网中每个节点的所处层级均增加了一层。如果根节点切换过程中产生了新的根节点，则父节点切换 可以随后调整网络结构。

注解： 根节点切换必须要求选举，因此只有在使用自组网 ESP-MESH 网络时才支持。换句话说，如果使用指定的根节点，则不能进行根节点切换。

父节点切换

父节点切换是指一个子节点将其上行连接切换到更浅一层的另一个父节点。**父节点切换是自动的**，这意味着如果较浅层出现了可用的潜在父节点（因“异步上电复位”产生），子节点将自动更改其上行连接。

所有潜在的父节点将定期发送信标帧（参见信标帧和 *RSSI* 阈值），从而允许子节点扫描较浅层的父节点的可用性。由于父节点切换，自组网 ESP-MESH 网络可以动态调整其网络结构，以确保每个连接均具有良好的 RSSI 值，并且网络中的层级最小。

4.10.6 数据传输

ESP-MESH 数据包

ESP-MESH 网络使用 ESP-MESH 数据包传输数据。ESP-MESH 数据包 **完全包含在 Wi-Fi 数据帧**中。ESP-MESH 网络中的多跳数据传输将涉及通过不同 Wi-Fi 数据帧在每个无线跳上传输的单个 ESP-MESH 数据包。

下图显示了 ESP-MESH 数据包的结构及其与 Wi-Fi 数据帧的关系。

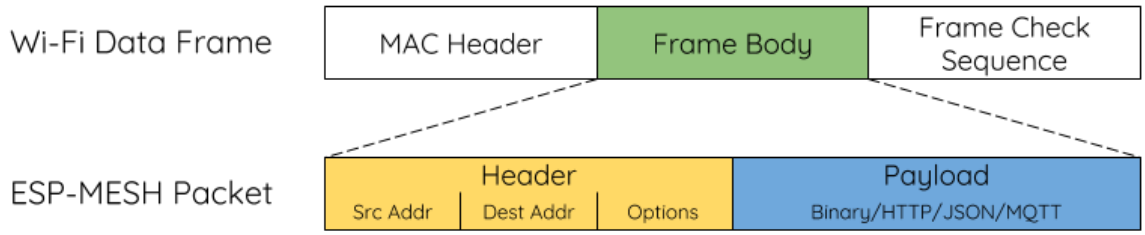

图 29: ESP-MESH 数据包

ESP-MESH 数据包的 **报头**包含源节点和目标节点的 MAC 地址。**选项 (option)** 字段包含有关特殊类型 ESP-MESH 数据包的信息，例如组传输或来自外部 IP 网络的数据包（请参阅*MESH_OPT_SEND_GROUP* 和*MESH_OPT_RECV_DS_ADDR*）。

ESP-MESH 数据包的 **有效载荷**包含实际的应用数据。该数据可以为原始二进制数据，也可以是使用 HTTP、MQTT 和 JSON 等应用层协议的编码数据（请见：*mesh_proto_t*）。

注解： 当向外部 IP 网络发送 ESP-MESH 数据包时，报头的目标地址字段将包含目标服务器的 IP 地址和端口号，而不是节点的 MAC 地址（请见：*mesh_addr_t*）。此外，根节点将处理外发 TCP/IP 数据包的形成。

组控制和组播

组播功能允许将单个 ESP-MESH 数据包同时发送给网络中的多个节点。ESP-MESH 中的组播可以通过“指定一个目标节点列表”或“预配置一个节点组”来实现。这两种组播方式均需调用*esp_mesh_send()* 实现。

如果通过“指定目标节点列表”实现组播，用户必须首先将 ESP-MESH 数据包的目标地址设置为 **组播组地址**（比如 `01:00:5E:xx:xx:xx`）。这表明 ESP-MESH 数据包是一个拥有一组地址的组播数据包，且该地址应该从报头选项中获得。然后，用户必须将目标节点的 MAC 地址列为选项（请见：*mesh_opt_t* 和*MESH_OPT_SEND_GROUP*）。这种组播方法不需要进行提前设置，但由于每个目标节点的 MAC 地址均需列为报头的选项字段，因此会产生大量开销数据。

分组组播允许 ESP-MESH 数据包被发送到一个预先配置的节点组。每个分组都有一个具有唯一性的 ID 标识。用户可通过*esp_mesh_set_group_id()* 将节点加入一个组。分组组播需要将 ESP-MESH 数据包的目标地址设置为目标组的 ID，还必须设置*MESH_DATA_GROUP* 标志位。分组组播产生的开销更小，但必须提前将节点加入分组中。

注解： 在组播期间，网络中的所有节点在 MAC 层都会收到 ESP-MESH 数据包。然而，不包括在 MAC 地址列表或目标组中的节点将简单地过滤掉这些数据包。

广播

广播功能允许将单个 ESP-MESH 数据包同时发送给网络中的所有节点。每个节点可以将一个广播包转发至其所有上行和下行连接，使得数据包尽可能快地在整个网络中传播。但是，ESP-MESH 利用以下方法

来避免在广播期间浪费带宽。

1. 当中间父节点收到来自其父节点的广播包时，它会将该数据包转发给自己的各个子节点，同时为自己保存一份数据包的副本。

2. 当中间父节点是广播的源节点时，它会将该数据包向上发送至其父节点，并向下发送给自己的各个子节点。

3. 当中间父节点接收到一个来自其子节点的广播包时，它会将该数据包转发给其父节点和其余子节点，同时为自己保存一份数据包的副本。

4. 当叶子节点是广播的源节点时，它会直接将该数据包发送至其父节点。

5. 当根节点是广播的源节点时，它会将该数据包发送至自己的所有子节点。

6. 当根节点收到来自其子节点的广播包时，它会将该数据包转发给其余子节点，同时为自己保存一份数据包的副本。

7. 当节点接收到一个源地址与自身 MAC 地址匹配的广播包时，它会将该广播包丢弃。

8. 当中间父节点收到一个来自其父节点的广播包时（该数据包最初来自该父节点的一个子节点），它会将该广播包丢弃。

上行流量控制

ESP-MESH 依赖父节点来控制其直接子节点的上行数据流。为了防止父节点的消息缓冲因上行传输过载而溢出，父节点将为每个子节点分配一个称为 **接收窗口** 的上行传输配额。**每个子节点均必须申请接收窗口才允许进行上行传输**。接收窗口的大小可以动态调整。完成从子节点到父节点的上行传输包括以下步骤：

1. 在每次传输之前，子节点向其父节点发送窗口请求。窗口请求中包括一个序号，与子节点的待传输数据包相对应。

2. 父节点接收窗口请求，并将序号与子节点发送的前一个数据包的序号进行比较，用于计算返回给子节点的接收窗口大小。

3. 子节点根据父节点指定的窗口大小发送数据包。如果子节点的接收窗口耗尽，它必须通过发送请求获得另一个接收窗口，然后才允许继续发送。

注解： ESP-MESH 不支持任何下行流量控制。

警告： 由于父节点切换，数据包可能会在上行传输期间丢失。

由于根节点是通向外部 IP 网络的唯一接口，因此下行节点必须了解根节点与外部 IP 网络的连接状态。否则，节点可能会尝试向一个已经与 IP 网络断开连接的根节点发送数据，从而造成不必要的传输和数据包丢失。ESP-MESH 可以基于监测根节点和外部 IP 网络的连接状态，提供一种稳定外发数据吞吐量的机制。根节点可以通过调用 `esp_mesh_post_toDS_state()` 将自身与外部 IP 网络的连接状态广播给所有其他节点。

双向数据流

下图展示了 ESP-MESH 双向数据流涉及的各种网络层。

由于使用路由表，**ESP-MESH 能够在 mesh 层中完全处理数据包的转发**。TCP/IP 层仅与 mesh 网络的根节点有关，可帮助根节点与外部 IP 网络的数据包传送。

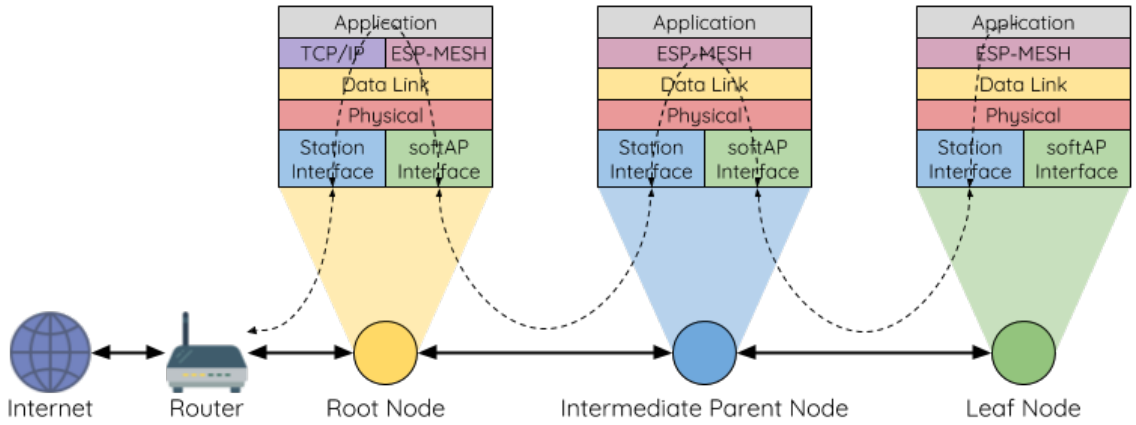

图 30: ESP-MESH 双向数据流

4.10.7 信道切换

背景

在传统的 Wi-Fi 网络中，**信道**代表预设的频率范围。在基础设施基本服务集 (BSS) 中，工作 AP 及与之相连的 station 必须处于传输信标的工作信道（1 到 14）中。物理上相邻的 BSS 使用相同的工作信道会导致干扰产生和性能下降。

为了允许 BSS 适应不断变化的物理层条件并保持性能，Wi-Fi 网络中增加了 **网络信道切换**的机制。网络信道切换是将 BSS 移至新的工作信道，并同时最大限度地减少期间对 BSS 的影响。然而，我们应该认识到，网络信道切换可能不会成功，无法将原信道中的所有 station 均移动至新的信道。

在基础设施 Wi-Fi 网络中，网络信道切换由 AP 触发，目的是将该 AP 及与之相连的所有 station 同步切换到新的信道。网络信道切换是通过在 AP 的周期性发送信标帧内嵌入一个 **信道切换公告 (CSA)** 元素来实现的。在网络信号切换前，该 CSA 元素用于向所有连接的 station 广播有关即将发生的网络信道切换，并且将包含在多个信标帧中。

一个 CSA 元素包含有关 **新信道号**和 **信道切换计数**的信息。其中，**信道切换计数**指示在网络信道切换之前剩余的信标帧间隔 (TBTT) 数量。因此，**信道切换计数**依每个信标帧递减，并且允许与之连接的 station 与 AP 同步进行信道切换。

ESP-MESH 网络信道切换

ESP-MESH 网络信道切换还利用包含 CSA 元素的信标帧。然而，ESP-MESH 作为一个多跳网络，其信标帧可能无法到达网络中的所有节点（这点与单跳网络不同），因此信道切换过程更加复杂。因此，ESP-MESH 网络依赖于通过节点转发 CSA 元素，从而实现在整个网络中的传播。

当具有一个或多个子节点的中间父节点接收到包含 CSA 元素的信标帧时，该节点会将该元素包含在其下一个发送的信标帧（即具有相同的 **新信道号**和 **信道切换计数**）中，从而实现该 CSA 元素的转发。鉴于 ESP-MESH 网络中的所有节点都接收到相同的 CSA 元素，这些节点可以使用 **信道切换计数**来同步其信道切换，但也会经历因 CSA 元素转发造成的延迟。

ESP-MESH 网络信道切换可以由路由器或根节点触发。

根节点触发 **由根节点触发的信道切换只能在 ESP-MESH 网络未连接到路由器**时才会发生。通过调用`esp_mesh_switch_channel()`，根节点将设置一个初始 **信道切换计数**值，并开始在其信标帧中包含 CSA 元素。接着，每个 CSA 元素将抵达第二层节点，并通过第二层节点自己的信标帧继续进行向下转发。

路由器触发 当 ESP-MESH 网络连接到路由器时，整个网络必须与路由器采用同一个信道。因此，**根节点在连接到路由器时无法触发信道切换**。

当根节点从路由器接收到包含 CSA 元素的信标帧时，**根节点将 CSA 元素中的信道切换计数值设置为自定义值，然后再通过信标帧继续向下转发**。此后，该 **信道切换计数**将依转发次数相对于自定义值依次递减。该自定义值可以基于诸如网络层级、当前节点数等因素。

ESP-MESH 网络及其路由器可能具有不同且变化的信标间隔，因此需要将 **信道切换计数**值设置为自定义值。也就是说，路由器提供的 **信道切换计数**值与 ESP-MESH 网络无关。通过使用自定义值，ESP-MESH 网络中的节点能够相对于 ESP-MESH 网络的信标间隔同步切换信道。也正因如此，ESP-MESH 网络也会出现信道与路由器及其连接 station 的信道切换不同步的情况。

网络信道切换的影响

- **由于 ESP-MESH 网络信道切换与路由器的信道切换不同步，ESP-MESH 网络和路由器之间会出现 临时信道差异**。
  - ESP-MESH 网络的信道切换时间取决于 ESP-MESH 网络的信标间隔和根节点的自定义 **信道切换计数**。
  - 在 ESP-MESH 网络切换期间，信道差异将阻止根节点和路由器之间的任何数据交换。
  - 在 ESP-MESH 网络中，根节点和中间父节点将请求与其连接的子节点停止传输，直至信道切换发生（通过将 CSA 元素的 **信道切换模式**字段置为 1）。
  - 频繁的路由器触发网络信道切换可能会降低 ESP-MESH 网络的性能。请注意，这可能是由 ESP-MESH 网络本身造成的（例如由于 ESP-MESH 网络的无线介质争用等原因）。此时，用户应该禁用路由器触发的自主信道切换，并直接指定一个信道。
- **当存在 临时信道差异时，根节点从技术上来说仍保持连接至路由器**。
  - 如果根节点经过一定数量信标间隔仍无法接到信标帧或探测来自路由器的响应，则会断开连接。
  - 断开连接时，根节点将自动重新扫描所有信道以确定是否存在路由器。
- **如果根节点无法接收任何路由器的 CSA 信标帧（例如短暂的路由器切换时间），则路由器将在没有 ESP-MESH 网络**
  - 在路由器切换信道后，根节点将不再能够接收路由器的信标帧和探测响应，并导致在一定数量的信标间隔后断开连接。
  - 在断开连接后，根节点将重新所有信道，寻找路由器。
  - 根节点将在整个过程中维护与之相连的下行连接。

注解： 虽然 ESP-MESH 网络信道切换的目的是将网络内的所有节点移动到新的工作信道，但也应该认识到，信道切换可能无法成功移动所有节点（比如由于节点故障等原因）。

信道和路由器切换配置

ESP-MESH 允许通过配置启用或禁用自主信道切换。同样，也可以通过配置启用或禁用自主路由器切换（即当根节点自主连接到另一个路由器时）。自主信道切换和自主路由器切换取决于以下配置参数和运行时间条件。

允许信道切换：本参数决定是否允许 ESP-MESH 网络进行自主信道切换，具体可通过*mesh_cfg_t* 结构体中的 `allow_channel_switch` 字段进行配置。

预设信道：ESP-MESH 网络可以将*mesh_cfg_t* 结构体中的 `channel` 字段设置为相应的信道号，而具备一个预设信道。如果未设置此字段，则 `allow_channel_switch` 的设置将被覆盖，即始终允许信道切换。

允许路由器切换：本参数决定是否允许 ESP-MESH 网络进行自主路由器切换，具体可通过*mesh_router_t* 结构体中的 `allow_router_switch` 字段进行配置。

预设路由器 BSSID：ESP-MESH 网络可以将*mesh_router_t* 结构体的 `bssid` 字段设置为目标路由器的 BSSID，而预设一个路由器。如果未设置此字段，则 `allow_router_switch` 的设置将被覆盖，即始终允许路由器切换。

存在根节点：根节点的存在也会影响是否允许信道或路由器切换。

下表说明了在不同参数/条件组合下是否允许信道切换和路由器切换。请注意，*X* 代表参数“不关心”。

预设信道	允许信道切换	预置路由器 BSSID	允许路由器切换	存在根节点	允许切换？
N	X	N	X	X	信道与路由器
N	X	Y	N	X	仅信道
N	X	Y	Y	X	信道与路由器
Y	Y	N	X	X	信道与路由器
Y	N	N	X	N	仅路由器
Y	N	N	X	Y	信道与路由器
Y	Y	Y	N	X	仅信道
Y	N	Y	N	N	无
Y	N	Y	N	Y	仅信道
Y	Y	Y	Y	X	信道与路由器
Y	N	Y	Y	N	仅路由器
Y	N	Y	Y	Y	信道与路由器

4.10.8 性能

ESP-MESH 网络的性能可以基于以下多个指标进行评估：

组网时长：从头开始构建 ESP-MESH 网络所需的总时长。

修复时间：从网络检测到节点断开到执行适当操作（例如生成新的根节点或形成新的连接等）以修复网络所需的时间。

每跳延迟：数据每经过一次无线 hop 而经历的延迟，即从父节点向子节点（或从子节点向父节点）发送一个数据包所需的时间。

网络节点容量：ESP-MESH 网络可以同时支持的节点总数。该指标取决于节点可以接受到的最大下行连接数和网络中允许的最大层级。

ESP-MESH 网络的常见性能指标如下表所示：

- 组网时长：< 60 秒
- **修复时间**
  - 根节点断开：< 10 秒
  - 子节点断开：< 5 秒
- 每条延迟：10 到 30 毫秒

注解： 上述性能指标的测试条件见下。

- 测试设备数量：**100**
- 最大允许下行连接数量：**6**
- 最大允许层级：**6**

注解： 吞吐量取决于数据包错误率和 hop 数量。

注解： 根节点访问外部 IP 网络的吞吐量直接受到 ESP-MESH 网络中节点数量和路由器带宽的影响。

注解： 用户应注意，ESP-MESH 网络的性能与网络配置和工作环境密切相关。

4.10.9 更多注意事项

- 数据传输使用 Wi-Fi WPA2-PSK 加密
- Mesh 网络 IE 使用 AES 加密

本文图片中使用的路由器与互联网图标来自 www.flaticon.com 的 Smashicons。

4.11 Core Dump

4.11.1 Overview

ESP-IDF provides support to generate core dumps on unrecoverable software errors. This useful technique allows post-mortem analysis of software state at the moment of failure. Upon the crash system enters panic state, prints some information and halts or reboots depending configuration. User can choose to generate core dump in order to analyse the reason of failure on PC later on. Core dump contains snapshots of all tasks in the system at the moment of failure. Snapshots include tasks control blocks (TCB) and stacks. So it is possible to find out what task, at what instruction (line of code) and what callstack of that task lead to the crash. It is also possible dumping variables content on demand if previously attributed accordingly. ESP-IDF provides special script *espcoredump.py* to help users to retrieve and analyse core dumps. This tool provides two commands for core dumps analysis:

- `info_corefile` - prints crashed task’ s registers, callstack, list of available tasks in the system, memory regions and contents of memory stored in core dump (TCBs and stacks)
- `dbg_corefile` - creates core dump ELF file and runs GDB debug session with this file. User can examine memory, variables and tasks states manually. Note that since not all memory is saved in core dump only values of variables allocated on stack will be meaningful

For more information about core dump internals see the - Core dump internals

4.11.2 Configurations

There are a number of core dump related configuration options which user can choose in project configuration menu (`idf.py menuconfig`).

Core dump data destination (Components -> Core dump -> Data destination)

- Save core dump to Flash (Flash)
- Print core dump to UART (UART)
- Disable core dump generation (None)

Core dump data format (Components -> Core dump -> Core dump data format)

- ELF format (Executable and Linkable Format file for core dump)
- Binary format (Basic binary format for core dump)

The ELF format contains extended features and allow to save more information about broken tasks and crashed software but it requires more space in the flash memory. This format of core dump is recommended for new software designs and is flexible enough to extend saved information for future revisions.

The Binary format is kept for compatibility standpoint, it uses less space in the memory to keep data and provides better performance.

Core dump data integrity check (Components -> Core dump -> Core dump data integrity check)

- Use CRC32 for core dump integrity verification
- Use SHA256 for core dump integrity verification (only work in ELF format)

The CRC32 option provides better calculation performance and consumes less memory for storage.

The SHA256 hash algorithm provides greater probability of detecting corruption than a CRC32 with multiple bit errors.

Maximum number of tasks snapshots in core dump (Components -> Core dump -> Maximum number of tasks)

Delay before core dump is printed to UART (Components -> Core dump -> Delay before print to UART)

The value is in ms.

Handling of UART core dumps in IDF Monitor (Components -> Core dump -> Delay before print to UART)

The value is base64 encoded.

- Decode and show summary (info_corefile)
- Don't decode

4.11.3 Save core dump to flash

When this option is selected core dumps are saved to special partition on flash. When using default partition table files which are provided with ESP-IDF it automatically allocates necessary space on flash, But if user wants to use its own layout file together with core dump feature it should define separate partition for core dump as it is shown below:

```
# Name,   Type, SubType, Offset,  Size
# Note: if you have increased the bootloader size, make sure to update the offsets␣
↪to avoid overlap
nvs,      data, nvs,     0x9000,  0x6000
phy_init, data, phy,     0xf000,  0x1000
factory,  app,  factory, 0x10000, 1M
coredump, data, coredump,,        64K
```

There are no special requirements for partition name. It can be chosen according to the user application needs, but partition type should be 'data' and sub-type should be 'coredump'. Also when choosing partition size note that core dump data structure introduces constant overhead of 20 bytes and per-task overhead of 12 bytes. This overhead does not include size of TCB and stack for every task. So partition size should be at least 20 + max tasks number x (12 + TCB size + max task stack size) bytes.

The example of generic command to analyze core dump from flash is: `espcoredump.py -p </path/to/serial/port> info_corefile </path/to/program/elf/file>` or `espcoredump.py -p </path/to/serial/port> dbg_corefile </path/to/program/elf/file>`

4.11.4 Print core dump to UART

When this option is selected base64-encoded core dumps are printed on UART upon system panic. In this case user should save core dump text body to some file manually and then run the following command: `espcoredump.py --chip <target_chip_type> info_corefile -t b64 -c </path/to/saved/base64/text> </path/to/program/elf/file>` or `espcoredump.py --chip <target_chip_type> dbg_corefile -t b64 -c </path/to/saved/base64/text> </path/to/program/elf/file>`

Base64-encoded body of core dump will be between the following header and footer:

```
================ CORE DUMP START ================
<body of base64-encoded core dump, save it to file on disk>
================= CORE DUMP END =================
```

The `CORE DUMP START` and `CORE DUMP END` lines must not be included in core dump text file.

4.11.5 ROM Functions in Backtraces

It is possible situation that at the moment of crash some tasks or/and crashed task itself have one or more ROM functions in their callstacks. Since ROM is not part of the program ELF it will be impossible for GDB to parse such callstacks, because it tries to analyse functions' prologues to accomplish that. In that case callstack printing will be

broken with error message at the first ROM function. To overcome this issue you can use ROM ELF provided by Espressif (https://dl.espressif.com/dl/esp32_rom.elf) and pass it to ‘espcoredump.py’.

4.11.6 Dumping variables on demand

Sometimes you want to read the last value of a variable to understand the root cause of a crash. Core dump supports retrieving variable data over GDB by attributing special notations declared variables.

Supported notations and RAM regions

- `COREDUMP_DRAM_ATTR` places variable into DRAM area which will be included into dump.
- `COREDUMP_RTC_ATTR` places variable into RTC area which will be included into dump.
- `COREDUMP_RTC_FAST_ATTR` places variable into RTC_FAST area which will be included into dump.

Example

1. In *Project Configuration Menu*, enable *COREDUMP TO FLASH*, then save and exit.
2. In your project, create a global variable in DRAM area as such as:

```
// uint8_t global_var;
COREDUMP_DRAM_ATTR uint8_t global_var;
```

3. In main application, set the variable to any value and `assert(0)` to cause a crash.

```
global_var = 25;
assert(0);
```

4. Build, flash and run the application on a target device and wait for the dumping information.
5. Run the command below to start core dumping in GDB, where `PORT` is the device USB port:

```
espcoredump.py -p PORT dbg_corefile <path/to/elf>
```

6. In GDB shell, type `p global_var` to get the variable content:

```
(gdb) p global_var
$1 = 25 '\031'
```

4.11.7 Running `espcoredump.py`

Generic command syntax: `espcoredump.py [options] command [args]`

Script Options

–**chip {auto,esp32,esp32s2,esp32c3}** Target chip type. Default value is “auto”

--port PORT, -p PORT Serial port device. Either “chip” or “port” need to be specified to determine the port when you have multi-target connected at the same time.

--baud BAUD, -b BAUD Serial port baud rate used when flashing/reading

--gdb-timeout-sec GDB_TIMEOUT_SEC Overwrite the default internal delay for gdb responses

Commands **dbg_corefile** Starts GDB debugging session with specified corefile

info_corefile Print core dump info from file

Command Arguments

--debug DEBUG, -d DEBUG Log level (0..3)

--gdb GDB, -g GDB Path to gdb

--core CORE, -c CORE Path to core dump file (if skipped core dump will be read from flash)

–**core-format {b64,elf,raw}, -t {b64,elf,raw}** File specified with "-c" is an ELF ("elf"), raw (raw) or base64-encoded (b64) binary

--off OFF, -o OFF Offset of coredump partition in flash (type "make partition_table" to see).

--save-core SAVE_CORE, -s SAVE_CORE Save core to file. Otherwise temporary core file will be deleted. Does not work with "-c"

--rom-elf ROM_ELF, -r ROM_ELF Path to ROM ELF file. Will use "<target>_rom.elf" if not specified

--print-mem, -m Print memory dump. Only valid when info_corefile.

<prog> Path to program ELF file.

4.12 Event Handling

Several ESP-IDF components use *events* to inform application about state changes, such as connection or disconnection. This document gives an overview of these event mechanisms.

4.12.1 Wi-Fi, Ethernet, and IP Events

Before the introduction of *esp_event library*, events from Wi-Fi driver, Ethernet driver, and TCP/IP stack were dispatched using the so-called *legacy event loop*. The following sections explain each of the methods.

esp_event Library Event Loop

esp_event library is designed to supersede the legacy event loop for the purposes of event handling in ESP-IDF. In the legacy event loop, all possible event types and event data structures had to be defined in `system_event_id_t` enumeration and `system_event_info_t` union, which made it impossible to send custom events to the event loop, and use the event loop for other kinds of events (e.g. Mesh). Legacy event loop also supported only one event handler function, therefore application components could not handle some of Wi-Fi or IP events themselves, and required application to forward these events from its event handler function.

See *esp_event library API reference* for general information on using this library. Wi-Fi, Ethernet, and IP events are sent to the *default event loop* provided by this library.

Legacy Event Loop

This event loop implementation is started using `esp_event_loop_init()` function. Application typically supplies an *event handler*, a function with the following signature:

```
esp_err_t event_handler(void *ctx, system_event_t *event)
{
}
```

Both the pointer to event handler function, and an arbitrary context pointer are passed to `esp_event_loop_init()`.

When Wi-Fi, Ethernet, or IP stack generate an event, this event is sent to a high-priority `event` task via a queue. Application-provided event handler function is called in the context of this task. Event task stack size and event queue size can be adjusted using *CONFIG_ESP_SYSTEM_EVENT_TASK_STACK_SIZE* and *CONFIG_ESP_SYSTEM_EVENT_QUEUE_SIZE* options, respectively.

Event handler receives a pointer to the event structure (`system_event_t`) which describes current event. This structure follows a *tagged union* pattern: `event_id` member indicates the type of event, and `event_info` member is a union of description structures. Application event handler will typically use `switch(event->event_id)` to handle different kinds of events.

If application event handler needs to relay the event to some other task, it is important to note that event pointer passed to the event handler is a pointer to temporary structure. To pass the event to another task, application has to make a copy of the entire structure.

Event IDs and Corresponding Data Structures

Event ID (legacy event ID)	Event data structure
Wi-Fi	
WIFI_EVENT_WIFI_READY (SYSTEM_EVENT_WIFI_READY)	n/a
WIFI_EVENT_SCAN_DONE (SYSTEM_EVENT_SCAN_DONE)	*wifi_event_sta_scan_done_t*
WIFI_EVENT_STA_START (SYSTEM_EVENT_STA_START)	n/a
WIFI_EVENT_STA_STOP (SYSTEM_EVENT_STA_STOP)	n/a
WIFI_EVENT_STA_CONNECTED (SYSTEM_EVENT_STA_CONNECTED)	*wifi_event_sta_connected_t*
WIFI_EVENT_STA_DISCONNECTED (SYSTEM_EVENT_STA_DISCONNECTED)	*wifi_event_sta_disconnected_t*
WIFI_EVENT_STA_AUTHMODE_CHANGE (SYSTEM_EVENT_STA_AUTHMODE_CHANGE)	*wifi_event_sta_authmode_change_t*
WIFI_EVENT_STA_WPS_ER_SUCCESS (SYSTEM_EVENT_STA_WPS_ER_SUCCESS)	n/a
WIFI_EVENT_STA_WPS_ER_FAILED (SYSTEM_EVENT_STA_WPS_ER_FAILED)	*wifi_event_sta_wps_fail_reason_t*
WIFI_EVENT_STA_WPS_ER_TIMEOUT (SYSTEM_EVENT_STA_WPS_ER_TIMEOUT)	n/a
WIFI_EVENT_STA_WPS_ER_PIN (SYSTEM_EVENT_STA_WPS_ER_PIN)	*wifi_event_sta_wps_er_pin_t*
WIFI_EVENT_AP_START (SYSTEM_EVENT_AP_START)	n/a
WIFI_EVENT_AP_STOP (SYSTEM_EVENT_AP_STOP)	n/a
WIFI_EVENT_AP_STACONNECTED (SYSTEM_EVENT_AP_STACONNECTED)	*wifi_event_ap_staconnected_t*
WIFI_EVENT_AP_STADISCONNECTED (SYSTEM_EVENT_AP_STADISCONNECTED)	*wifi_event_ap_stadisconnected_t*
WIFI_EVENT_AP_PROBEREQRECVED (SYSTEM_EVENT_AP_PROBEREQRECVED)	*wifi_event_ap_probe_req_rx_t*
Ethernet	
ETHERNET_EVENT_START (SYSTEM_EVENT_ETH_START)	n/a
ETHERNET_EVENT_STOP (SYSTEM_EVENT_ETH_STOP)	n/a
ETHERNET_EVENT_CONNECTED (SYSTEM_EVENT_ETH_CONNECTED)	n/a
ETHERNET_EVENT_DISCONNECTED (SYSTEM_EVENT_ETH_DISCONNECTED)	n/a
IP	
IP_EVENT_STA_GOT_IP (SYSTEM_EVENT_STA_GOT_IP)	`ip_event_got_ip_t`
IP_EVENT_STA_LOST_IP (SYSTEM_EVENT_STA_LOST_IP)	n/a
IP_EVENT_AP_STAIPASSIGNED (SYSTEM_EVENT_AP_STAIPASSIGNED)	n/a
IP_EVENT_GOT_IP6 (SYSTEM_EVENT_GOT_IP6)	`ip_event_got_ip6_t`
IP_EVENT_ETH_GOT_IP (SYSTEM_EVENT_ETH_GOT_IP)	`ip_event_got_ip_t`

4.12.2 Mesh Events

ESP-MESH uses a system similar to the *Legacy Event Loop* to deliver events to the application. See 系统事件 for details.

4.12.3 Bluetooth Events

Various modules of the Bluetooth stack deliver events to applications via dedicated callback functions. Callback functions receive the event type (enumerated value) and event data (union of structures for each event type). The following list gives the registration API name, event enumeration type, and event parameters type.

- BLE GAP: *esp_ble_gap_register_callback()*, *esp_gap_ble_cb_event_t*, *esp_ble_gap_cb_param_t*.
- BT GAP: *esp_bt_gap_register_callback()*, *esp_bt_gap_cb_event_t*, *esp_bt_gap_cb_param_t*.
- GATTC: *esp_ble_gattc_register_callback()*, esp_bt_gattc_cb_event_t, esp_bt_gattc_cb_param_t.
- GATTS: *esp_ble_gatts_register_callback()*, esp_bt_gatts_cb_event_t, esp_bt_gatts_cb_param_t.
- SPP: *esp_spp_register_callback()*, *esp_spp_cb_event_t*, *esp_spp_cb_param_t*.
- Blufi: *esp_blufi_register_callbacks()*, *esp_blufi_cb_event_t*, *esp_blufi_cb_param_t*.
- A2DP: *esp_a2d_register_callback()*, *esp_a2d_cb_event_t*, *esp_a2d_cb_param_t*.
- AVRC: *esp_avrc_ct_register_callback()*, *esp_avrc_ct_cb_event_t*, *esp_avrc_ct_cb_param_t*.
- HFP Client: *esp_hf_client_register_callback()*, *esp_hf_client_cb_event_t*, *esp_hf_client_cb_param_t*.
- HFP AG: esp_hf_ag_register_callback(), esp_hf_ag_cb_event_t, esp_hf_ag_cb_param_t.

4.13 片外 RAM

4.13.1 简介

ESP32 提供了好几百 KB 的片上 RAM，可以满足大部分需求。但有些场景可能需要更多 RAM，因此 ESP32 另外提供了高达 4 MB 的片外 SPI RAM 存储器以供用户使用。片外 RAM 被添加到内存映射中，在某些范围内与片上 RAM 使用方式相同。

4.13.2 硬件

ESP32 支持与 SPI Flash 芯片并联的 SPI PSRAM。虽然 ESP32 支持多种类型的 RAM 芯片，但 ESP-IDF 当前仅支持乐鑫品牌的 PSRAM 芯片，如 ESP-PSRAM32、ESP-PSRAM64 等。

注解： PSRAM 芯片的工作电压分为 1.8 V 和 3.3 V。其工作电压必须与 flash 的工作电压匹配。请查询您 PSRAM 芯片以及 ESP32 的技术规格书获取准确的工作电压。对于 1.8 V 的 PSRAM 芯片，请确保在启动时将 MTDI 管脚设置为高电平，或者将 ESP32 中的 eFuses 设置为始终使用 1.8 V 的 VDD_SIO 电平，否则有可能会损坏 PSRAM 和/或 flash 芯片。

注解： 乐鑫同时提供模组和系统级封装芯片，集成了兼容的 PSRAM 和 flash，可直接用于终端产品 PCB 中。如需了解更多信息，请前往乐鑫官网。

有关将 SoC 或模组管脚连接到片外 PSRAM 芯片的具体细节，请查阅 SoC 或模组技术规格书。

4.13.3 配置片外 RAM

ESP-IDF 完全支持将外部存储器集成到您的应用程序中。在启动并完成片外 RAM 初始化后，可以将 ESP-IDF 配置为以多种方式处理片外 RAM：

- 集成片外 *RAM* 到 *ESP32* 内存映射
- 添加片外 *RAM* 到堆内存分配器
- 调用 *malloc()* 分配片外 *RAM* （默认）
- 允许.*bss* 段放入片外存储器

集成片外 RAM 到 ESP32 内存映射

在*CONFIG_SPIRAM_USE* 中选择 “Integrate RAM into memory map（集成片外 RAM 到 ESP32 内存映射）” 选项。

这是集成片外 RAM 最基础的设置选项，大多数用户需要用到其他更高级的选项。

ESP-IDF 启动过程中，片外 RAM 被映射到以 0x3F800000 起始的数据地址空间（字节可寻址），空间大小正好为 SPI RAM 的大小 (4 MB)。

应用程序可以通过创建指向该区域的指针手动将数据放入片外存储器，同时应用程序全权负责管理片外 SPI RAM，包括协调 Buffer 的使用、防止发生损坏等。

添加片外 RAM 到堆内存分配器

在*CONFIG_SPIRAM_USE* 中选择 “Make RAM allocatable using heap_caps_malloc(…, MALLOC_CAP_SPIRAM)” 选项。

启用上述选项后，片外 RAM 被映射到地址 0x3F800000，并将这个区域添加到堆内存分配器 里携带 `MALLOC_CAP_SPIRAM` 的标志

程序如果想从片外存储器分配存储空间，则需要调用 `heap_caps_malloc(size, MALLOC_CAP_SPIRAM)`，之后可以调用 `free()` 函数释放这部分存储空间。

调用 malloc() 分配片外 RAM

在*CONFIG_SPIRAM_USE* 中选择 “Make RAM allocatable using malloc() as well” 选项，该选项为默认选项。

启用此选项后，片外存储器将被添加到内存分配程序（与上一选项相同），同时也将被添加到由标准 `malloc()` 函数返回的 RAM 中。

这允许应用程序使用片外 RAM，无需重写代码就能使用 `heap_caps_malloc(..., MALLOC_CAP_SPIRAM)`。

如果某次内存分配偏向于片外存储器，您也可以使用*CONFIG_SPIRAM_MALLOC_ALWAYSINTERNAL* 设置分配空间的大小阈值，控制分配结果：

- 如果分配的空间小于阈值，分配程序将首先选择内部存储器。
- 如果分配的空间等于或大于阈值，分配程序将首先选择外部存储器。

如果优先考虑的内部或外部存储器中没有可用的存储块，分配程序则会选择其他类型存储。

由于有些 Buffer 仅可在内部存储器中分配，因此需要使用第二个配置项*CONFIG_SPIRAM_MALLOC_RESERVE_INTERNAL* 定义一个内部存储池，仅限显式的内部存储器分配使用（例如用于 DMA 的存储器）。常规 `malloc()` 将不会从该池中分配，但可以使用*MALLOC_CAP_DMA* 和 `MALLOC_CAP_INTERNAL` 旗标从该池中分配存储器。

允许.bss 段放入片外存储器

通过检查*CONFIG_SPIRAM_ALLOW_BSS_SEG_EXTERNAL_MEMORY* 启用该选项，此选项配置与上面三个选项互不影响。

启用该选项后，从 0x3F800000 起始的地址空间将用于存储来自 lwip、net80211、libpp 和 bluedroid ESP-IDF 库中零初始化的数据（BSS 段）。

`EXT_RAM_ATTR` 宏应用于任何静态声明（未初始化为非零值）之后，可以将附加数据从内部 BSS 段移到片外 RAM。

也可以使用链接器片段方案 `extram_bss` 将组件或库的 BSS 段放到片外 RAM 中。

启用此选项可以减少 BSS 段占用的内部静态存储。

剩余的片外 RAM 也可以通过上述方法添加到堆分配器中。

4.13.4 片外 RAM 使用限制

使用片外 RAM 有下面一些限制：

- Flash cache 禁用时（比如，正在写入 flash），片外 RAM 将无法访问；同样，对片外 RAM 的读写操作也将导致 cache 访问异常。出于这个原因，ESP-IDF 不会在片外 RAM 中分配任务堆栈（详见下文）。
- 片外 RAM 不能用于储存 DMA 事务描述符，也不能用作 DMA 读写操作的缓冲区 (Buffer)。因此，当片外 RAM 启用时，与 DMA 搭配使用的 Buffer 必须先使用 `heap_caps_malloc(size, MALLOC_CAP_DMA | MALLOC_CAP_INTERNAL)` 进行分配，之后可以调用标准 `free()` 回调释放 Buffer。
- 片外 RAM 与片外 flash 使用相同的 cache 区域，这意味着频繁在片外 RAM 访问的变量可以像在片上 RAM 中一样快速读取和修改。但访问大块数据时（大于 32 KB），cache 空间可能会不足，访问速度将回落到片外 RAM 访问速度。此外，访问大块数据会挤出 flash cache，可能降低代码执行速度。
- 片外 RAM 不可用作任务堆栈存储器。因此 *`xTaskCreate()`* 及类似函数将始终为堆栈和任务 TCB 分配片上储存器，而 *`xTaskCreateStatic()`* 类型的函数将检查传递的 Buffer 是否属于片上存储器。
- 默认情况下，片外 RAM 初始化失败将终止 ESP-IDF 启动。如果想禁用此功能，可启用 *CONFIG_SPIRAM_IGNORE_NOTFOUND* 配置选项。

如果启用 *CONFIG_SPIRAM_ALLOW_BSS_SEG_EXTERNAL_MEMORY*，*CONFIG_SPIRAM_IGNORE_NOTFOUND* 选项将不能使用，这是因为在链接时，链接器已经向片外 RAM 分配符号。

- Regarding stacks in PSRAM: For tasks not calling on code in ROM in any way, directly or indirectly, the menuconfig option *CONFIG_SPIRAM_ALLOW_STACK_EXTERNAL_MEMORY* will eliminate the check in xTaskCreateStatic, allowing a task’s stack to be in external RAM. Using this is not advised, however.
- When used at 80 MHz clock speed, external RAM must also occupy either the HSPI or VSPI bus. Select which SPI host will be used by *CONFIG_SPIRAM_OCCUPY_SPI_HOST*.

4.13.5 Chip revisions

There are some issues with certain revisions of ESP32 that have repercussions for use with external RAM. The issues are documented in the ESP32 ECO document. In particular, ESP-IDF handles the bugs mentioned in the following ways:

ESP32 rev v0

ESP-IDF has no workaround for the bugs in this revision of silicon, and it cannot be used to map external PSRAM into ESP32’s main memory map.

ESP32 rev v1

The bugs in this revision of silicon cause issues if certain sequences of machine instructions operate on external memory. (ESP32 ECO 3.2). As a workaround, the GCC compiler received the flag `-mfix-esp32-psram-cache-issue` to filter these sequences and only output the code that can safely be executed. Enable this flag by checking *CONFIG_SPIRAM_CACHE_WORKAROUND*.

Aside from linking to a recompiled version of Newlib with the additional flag, ESP-IDF also does the following:

- Avoids using some ROM functions

- Allocates static memory for the WiFi stack

ESP32 rev v3

ESP32 revision 3 (“ECO V3”) fixes the PSRAM cache issue found in rev. 1. When *CONFIG_ESP32_REV_MIN* option is set to rev. 3, compiler workarounds related to PSRAM will be disabled. For more information about ESP32 ECO V3, see ESP32 ECO V3 User Guide.

4.14 严重错误

4.14.1 概述

在某些情况下，程序并不会按照我们的预期运行，在 ESP-IDF 中，这些情况包括：

- CPU 异常：非法指令，加载/存储时的内存对齐错误，加载/存储时的访问权限错误，双重异常。
- 系统级检查错误：
  - 中断看门狗 超时
  - 任务看门狗 超时（只有开启*CONFIG_ESP_TASK_WDT_PANIC* 后才会触发严重错误）
  - 高速缓存访问错误
  - 掉电检测事件
  - 堆栈溢出
  - Stack 粉碎保护检查
  - Heap 完整性检查
- 使用 `assert`、`configASSERT` 等类似的宏断言失败。

本指南会介绍 ESP-IDF 中这类错误的处理流程，并给出对应的解决建议。

4.14.2 紧急处理程序

概述 中列举的所有错误都会由 紧急处理程序（*Panic Handler*） 负责处理。

紧急处理程序首先会将出错原因打印到控制台，例如 CPU 异常的错误信息通常会类似于

```
Guru Meditation Error: Core 0 panic'ed (IllegalInstruction). Exception was␣
↪unhandled.
```

对于一些系统级检查错误（如中断看门狗超时，高速缓存访问错误等），错误信息会类似于

```
Guru Meditation Error: Core 0 panic'ed (Cache disabled but cached memory␣
↪region accessed). Exception was unhandled.
```

不管哪种情况，错误原因都会被打印在括号中。请参阅*Guru Meditation 错误* 以查看所有可能的出错原因。

紧急处理程序接下来的行为将取决于*CONFIG_ESP_SYSTEM_PANIC* 的设置，支持的选项包括：

- 打印 CPU 寄存器，然后重启（`CONFIG_ESP_SYSTEM_PANIC_PRINT_REBOOT`）- 默认选项
  打印系统发生异常时 CPU 寄存器的值，打印回溯，最后重启芯片。
- 打印 CPU 寄存器，然后暂停（`CONFIG_ESP_SYSTEM_PANIC_PRINT_HALT`）
  与上一个选项类似，但不会重启，而是选择暂停程序的运行。重启程序需要外部执行复位操作。
- 静默重启（`CONFIG_ESP_SYSTEM_PANIC_SILENT_REBOOT`）
  不打印 CPU 寄存器的值，也不打印回溯，立即重启芯片。
- 调用 GDB Stub（`CONFIG_ESP_SYSTEM_PANIC_GDBSTUB`）
  启动 GDB 服务器，通过控制台 UART 接口与 GDB 进行通信。详细信息请参阅*GDB Stub*。

紧急处理程序的行为还受到另外两个配置项的影响：

- 如果*CONFIG_ESP32_DEBUG_OCDAWARE* 被使能了（默认），紧急处理程序会检测 ESP32 是否已经连接 JTAG 调试器。如果检测成功，程序会暂停运行，并将控制权交给调试器。在这种情况下，寄存器和回溯不会被打印到控制台，并且也不会使用 GDB Stub 和 Core Dump 的功能。

- 如果使能了*Core Dump* 功能（CONFIG_ESP_COREDUMP_ENABLE_TO_FLASH 或者 CONFIG_ESP_COREDUMP_ENABLE_TO_UART 选项），系统状态（任务堆栈和寄存器）会被转储到 Flash 或者 UART 以供后续分析。

下图展示了紧急处理程序的行为：

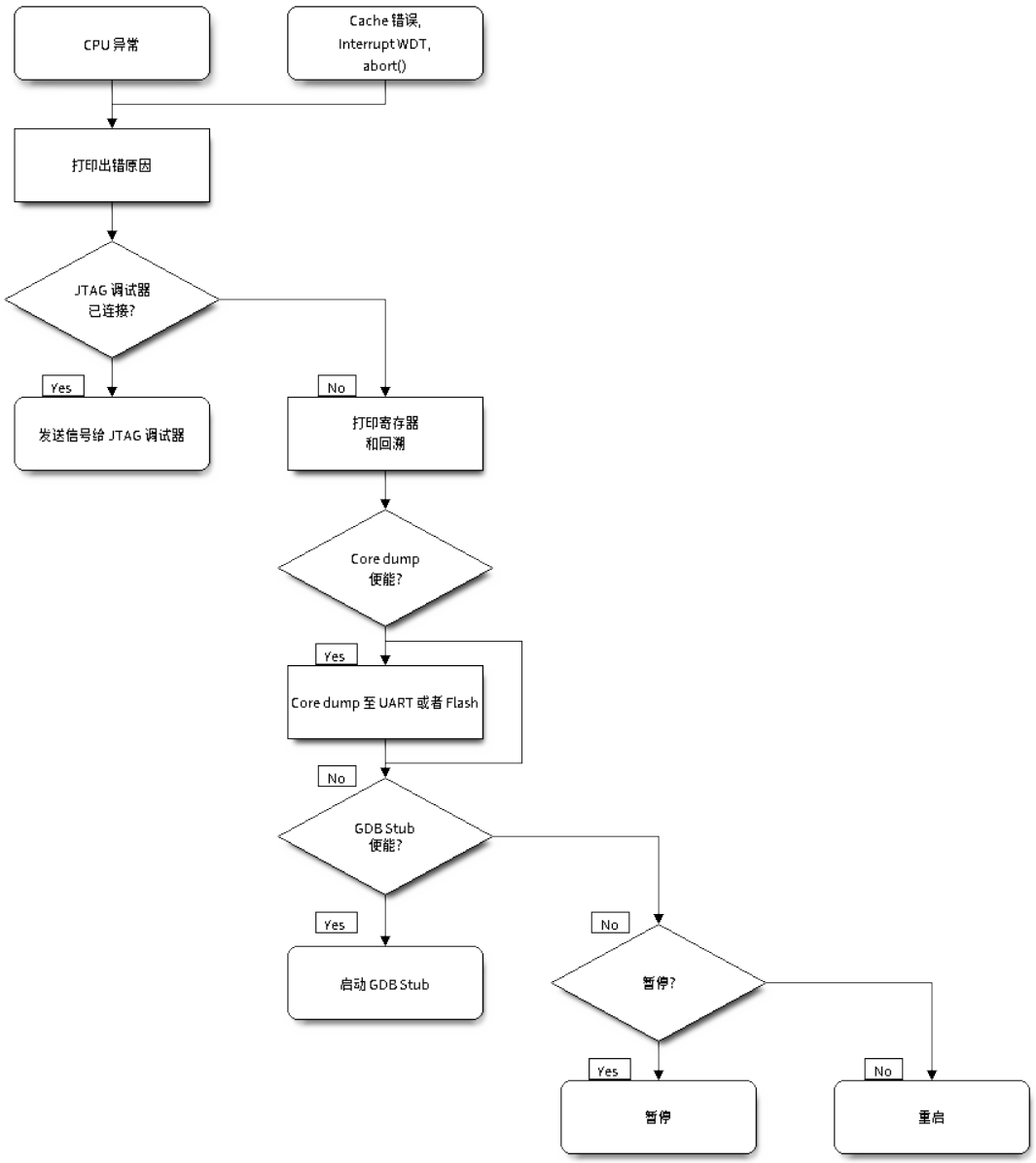

图 31: 紧急处理程序流程图（点击放大）

4.14.3 寄存器转储与回溯

除非启用了 CONFIG_ESP_SYSTEM_PANIC_SILENT_REBOOT 否则紧急处理程序会将 CPU 寄存器和回溯打印到控制台

```
Core 0 register dump:
PC      : 0x400e14ed  PS      : 0x00060030  A0      : 0x800d0805  A1      :␣
↪0x3ffb5030
```

(下页继续)

(续上页)

```
A2      : 0x00000000  A3      : 0x00000001  A4      : 0x00000001  A5      :␣
↪0x3ffb50dc
A6      : 0x00000000  A7      : 0x00000001  A8      : 0x00000000  A9      :␣
↪0x3ffb5000
A10     : 0x00000000  A11     : 0x3ffb2bac  A12     : 0x40082d1c  A13     :␣
↪0x06ff1ff8
A14     : 0x3ffb7078  A15     : 0x00000000  SAR     : 0x00000014  EXCCAUSE:␣
↪0x0000001d
EXCVADDR: 0x00000000  LBEG    : 0x4000c46c  LEND    : 0x4000c477  LCOUNT  :␣
↪0xffffffff

Backtrace: 0x400e14ed:0x3ffb5030 0x400d0802:0x3ffb5050
```

仅会打印异常帧中 CPU 寄存器的值，即引发 CPU 异常或者其它严重错误时刻的值。

紧急处理程序如果是因 abort() 而调用，则不会打印寄存器转储。

在某些情况下，例如中断看门狗超时，紧急处理程序会额外打印 CPU 寄存器（EPC1-EPC4）的值，以及另一个 CPU 的寄存器值和代码回溯。

回溯行包含了当前任务中每个堆栈帧的 PC:SP 对（PC 是程序计数器，SP 是堆栈指针）。如果在 ISR 中发生了严重错误，回溯会同时包括被中断任务的 PC:SP 对，以及 ISR 中的 PC:SP 对。

如果使用了*IDF 监视器*，该工具会将程序计数器的值转换为对应的代码位置（函数名，文件名，行号），并加以注释

```
Core 0 register dump:
PC      : 0x400e14ed  PS      : 0x00060030  A0      : 0x800d0805  A1      :␣
↪0x3ffb5030
0x400e14ed: app_main at /Users/user/esp/example/main/main.cpp:36

A2      : 0x00000000  A3      : 0x00000001  A4      : 0x00000001  A5      :␣
↪0x3ffb50dc
A6      : 0x00000000  A7      : 0x00000001  A8      : 0x00000000  A9      :␣
↪0x3ffb5000
A10     : 0x00000000  A11     : 0x3ffb2bac  A12     : 0x40082d1c  A13     :␣
↪0x06ff1ff8
0x40082d1c: _calloc_r at /Users/user/esp/esp-idf/components/newlib/syscalls.c:51

A14     : 0x3ffb7078  A15     : 0x00000000  SAR     : 0x00000014  EXCCAUSE:␣
↪0x0000001d
EXCVADDR: 0x00000000  LBEG    : 0x4000c46c  LEND    : 0x4000c477  LCOUNT  :␣
↪0xffffffff

Backtrace: 0x400e14ed:0x3ffb5030 0x400d0802:0x3ffb5050
0x400e14ed: app_main at /Users/user/esp/example/main/main.cpp:36

0x400d0802: main_task at /Users/user/esp/esp-idf/components/esp32/cpu_start.c:470
```

若要查找发生严重错误的代码位置，请查看“Backtrace”的后面几行，发生严重错误的代码显示在顶行，后续几行显示的是调用堆栈。

4.14.4 GDB Stub

如果启用了 CONFIG_ESP_SYSTEM_PANIC_GDBSTUB 选项，在发生严重错误时，紧急处理程序不会复位芯片，相反，它将启动 GDB 远程协议服务器，通常称为 GDB Stub。发生这种情况时，可以让主机上运行的 GDB 实例通过 UART 端口连接到 ESP32。

如果使用了*IDF 监视器*，该工具会在 UART 端口检测到 GDB Stub 提示符后自动启动 GDB，输出会类似于:

```
Entering gdb stub now.
$T0b#e6GNU gdb (crosstool-NG crosstool-ng-1.22.0-80-gff1f415) 7.10
Copyright (C) 2015 Free Software Foundation, Inc.
License GPLv3+: GNU GPL version 3 or later <http://gnu.org/licenses/gpl.html>
This is free software: you are free to change and redistribute it.
There is NO WARRANTY, to the extent permitted by law.  Type "show copying"
and "show warranty" for details.
This GDB was configured as "--host=x86_64-build_apple-darwin16.3.0 --target=xtensa-
↪esp32-elf".
Type "show configuration" for configuration details.
For bug reporting instructions, please see:
<http://www.gnu.org/software/gdb/bugs/>.
Find the GDB manual and other documentation resources online at:
<http://www.gnu.org/software/gdb/documentation/>.
For help, type "help".
Type "apropos word" to search for commands related to "word"...
Reading symbols from /Users/user/esp/example/build/example.elf...done.
Remote debugging using /dev/cu.usbserial-31301
0x400e1b41 in app_main ()
    at /Users/user/esp/example/main/main.cpp:36
36      *((int*) 0) = 0;
(gdb)
```

在 GDB 会话中，我们可以检查 CPU 寄存器，本地和静态变量以及内存中任意位置的值。但是不支持设置断点，改变 PC 值或者恢复程序的运行。若要复位程序，请退出 GDB 会话，在 IDF 监视器中连续输入 Ctrl-T Ctrl-R，或者按下开发板上的复位按键也可以重新运行程序。

4.14.5 Guru Meditation 错误

本节将对打印在 `Guru Meditation Error: Core panic'ed` 后面括号中的致错原因进行逐一解释。

注解： 想要了解“Guru Meditation”的历史渊源，请参阅 维基百科 。

IllegalInstruction

此 CPU 异常表示当前执行的指令不是有效指令，引起此错误的常见原因包括：

- FreeRTOS 中的任务函数已返回。在 FreeRTOS 中，如果想终止任务函数，需要调用 *`vTaskDelete()`* 函数释放当前任务的资源，而不是直接返回。
- 无法从 SPI Flash 中加载下一条指令，这通常发生在：
  - 应用程序将 SPI Flash 的引脚重新配置为其它功能（如 GPIO，UART 等等）。有关 SPI Flash 引脚的详细信息，请参阅硬件设计指南和芯片/模组的数据手册。
  - 某些外部设备意外连接到 SPI Flash 的引脚上，干扰了 ESP32 和 SPI Flash 之间的通信。

InstrFetchProhibited

此 CPU 异常表示 CPU 无法加载指令，因为指令的地址不在 IRAM 或者 IROM 中的有效区域中。

通常这意味着代码中调用了并不指向有效代码块的函数指针。这种情况下，可以查看 `PC` （程序计数器）寄存器的值并做进一步判断：若为 0 或者其它非法值（即只要不是 `0x4xxxxxxx` 的情况），则证实确实是该原因。

LoadProhibited, StoreProhibited

当应用程序尝试读取或写入无效的内存位置时，会发生此类 CPU 异常。此类无效内存地址可以在寄存器转储的 EXCVADDR 中找到。如果该地址为零，通常意味着应用程序正尝试解引用一个 NULL 指针。如果该地址接近于零，则通常意味着应用程序尝试访问某个结构体的成员，但是该结构体的指针为 NULL。如果该地址是其它非法值（不在 0x3fxxxxxx - 0x6xxxxxxx 的范围内），则可能意味着用于访问数据的指针未初始化或者已经损坏。

IntegerDivideByZero

应用程序尝试将整数除以零。

LoadStoreAlignment

应用程序尝试读取/写入的内存位置不符合加载/存储指令对字节对齐大小的要求，例如，32 位加载指令只能访问 4 字节对齐的内存地址，而 16 位加载指令只能访问 2 字节对齐的内存地址。

LoadStoreError

这类异常通常发生于以下几种场合:

应用程序尝试从仅支持 32 位加载/存储的内存区域执行 8 位或 16 位加载/存储操作，例如，解引用一个指向指令内存区域 (比如 IRAM 或者 IROM) 的 char* 指针就会触发这个错误。应用程序尝试保存数据到只读的内存区域（比如 IROM 或者 DROM）也会触发这个错误。

Unhandled debug exception

这后面通常会再跟一条消息:

```
Debug exception reason: Stack canary watchpoint triggered (task_name)
```

此错误表示应用程序写入的位置越过了 task_name 任务堆栈的末尾，请注意，并非每次堆栈溢出都会触发此错误。任务有可能会绕过堆栈金丝雀（stack canary）的位置访问堆栈，在这种情况下，监视点就不会被触发。

Interrupt wdt timeout on CPU0 / CPU1

这表示发生了中断看门狗超时，详细信息请查阅看门狗 文档。

Cache disabled but cached memory region accessed

在某些情况下，ESP-IDF 会暂时禁止通过高速缓存访问外部 SPI Flash 和 SPI RAM，例如在使用 spi_flash API 读取/写入/擦除/映射 SPI Flash 的时候。在这些情况下，任务会被挂起，并且未使用 ESP_INTR_FLAG_IRAM 注册的中断处理程序会被禁用。请确保任何使用此标志注册的中断处理程序所访问的代码和数据分别位于 IRAM 和 DRAM 中。更多详细信息请参阅*SPI Flash API 文档*。

4.14.6 其它严重错误

欠压

ESP32 内部集成掉电检测电路，并且会默认启用。如果电源电压低于安全值，掉电检测器可以触发系统复位。掉电检测器可以使用*CONFIG_ESP32_BROWNOUT_DET* 和*CONFIG_ESP32_BROWNOUT_DET_LVL_SEL* 这两个选项进行设置。

当掉电检测器被触发时，会打印如下信息:

```
Brownout detector was triggered
```

芯片会在该打印信息结束后复位。

请注意，如果电源电压快速下降，则只能在控制台上看到部分打印信息。

Heap 不完整

ESP-IDF 堆的实现包含许多运行时的堆结构检查，可以在 menuconfig 中开启额外的检查（“Heap Poisoning”）。如果其中的某项检查失败，则会打印类似如下信息:

```
CORRUPT HEAP: Bad tail at 0x3ffe270a. Expected 0xbaad5678 got 0xbaac5678
assertion "head != NULL" failed: file "/Users/user/esp/esp-idf/components/heap/
↪multi_heap_poisoning.c", line 201, function: multi_heap_free
abort() was called at PC 0x400dca43 on core 0
```

更多详细信息，请查阅堆内存调试 文档。

Stack 粉碎

Stack 粉碎保护（基于 GCC `-fstack-protector*` 标志）可以通过 ESP-IDF 中的*CONFIG_COMPILER_STACK_CHECK_MODE* 选项来开启。如果检测到 Stack 粉碎，则会打印类似如下的信息:

```
Stack smashing protect failure!

abort() was called at PC 0x400d2138 on core 0

Backtrace: 0x4008e6c0:0x3ffc1780 0x4008e8b7:0x3ffc17a0 0x400d2138:0x3ffc17c0␣
↪0x400e79d5:0x3ffc17e0 0x400e79a7:0x3ffc1840 0x400e79df:0x3ffc18a0␣
↪0x400e2235:0x3ffc18c0 0x400e1916:0x3ffc18f0 0x400e19cd:0x3ffc1910␣
↪0x400e1a11:0x3ffc1930 0x400e1bb2:0x3ffc1950 0x400d2c44:0x3ffc1a80
0
```

回溯信息会指明发生 Stack 粉碎的函数，建议检查函数中是否有代码访问本地数组时发生了越界。

4.15 Flash 加密

本文档将介绍 ESP32 的 Flash 加密功能，并通过示例展示用户如何在开发及生产过程中使用此功能。本文档旨在引导用户快速入门如何测试及验证 Flash 加密的相关操作。有关 Flash 加密块的详细信息可参见 ESP32 技术参考手册。

4.15.1 概述

Flash 加密功能用于加密与 ESP32 搭载使用的 SPI Flash 中的内容。启用 Flash 加密功能后，物理读取 SPI Flash 便无法恢复大部分 Flash 内容。通过明文数据烧录 ESP32 可应用加密功能，（若已启用加密功能）引导加载程序会在首次启动时对数据进行加密。

启用 Flash 加密后，系统将默认加密下列类型的 Flash 数据:

- 引导加载程序
- 分区表
- 所有“app”类型的分区

其他类型的 Flash 数据将视情况进行加密:

- 安全启动引导加载程序摘要（如果已启用安全启动）
- 分区表中标有“加密”标记的分区

Flash 加密与*安全启动* 功能各自独立，您可以在关闭安全启动的状态下使用 Flash 加密。但是，为了安全的计算机环境，二者应同时使用。在关闭安全启动的状态下，需运行其他配置来确保 Flash 加密的有效性。详细信息可参见*使用无安全启动的 Flash 加密*。

重要： 启用 Flash 加密将限制后续 ESP32 更新。请务必阅读本文档（包括*Flash 加密的局限性*）了解启用 Flash 加密的影响。

4.15.2 Flash 加密过程中使用的 eFuse

Flash 加密操作由 ESP32 上的多个 eFuse 控制。以下是这些 eFuse 列表及其描述：

eFuse	描述	是否可锁定为读取/写入	默认值
编码方案	该 2 位宽 eFuse 控制 BLOCK1 中使用的实际位数，从而获得最终的 256 位 AES 密钥。编码方案值解码如下： 0: 256 bits 1: 192 bits 2: 128 bits 最终的 AES 密钥根据 FLASH_CRYPT_CONFIG 的值产生。	是	0
BLOCK1	存储 AES 密钥的 256 位宽 eFuse 块	是	x
FLASH_CRYPT_CONFIG	4 位宽 eFuse，控制 AES 加密进程	是	0xF
download_dis_encrypt	设置后，在 UART 下载模式运行时关闭 Flash 加密操作	是	0
download_dis_decrypt	设置后，在 UART 下载模式运行时关闭 Flash 解密操作	是	0
FLASH_CRYPT_CNT	7 位 eFuse，在启动时启用/关闭加密功能 偶数位 (0, 2, 4, 6): 启动时加密 Flash 奇数位 (1, 3, 5, 7): 启动时不加密 Flash	是	0

对上述位的读写访问由 `efuse_wr_disable` 和 `efuse_rd_disable` 寄存器中的相应位控制。有关 ESP32 eFuse 的详细信息可参见*eFuse 管理器*。

4.15.3 Flash 的加密过程

假设 eFuse 值处于默认状态，且第二阶段的引导加载程序编译为支持 Flash 加密，则 Flash 加密过程执行如下：

- 首次上电复位时，Flash 中的所有数据都是未加密形式（明文数据）。第一阶段加载器 (Rom) 将在 IRAM 中加载第二阶段加载器。
- 第二阶段引导加载程序将读取 flash_crypt_cnt (=00000000b) eFuse 值，因为该值为 0（偶数位），第二阶段引导加载程序将配置并启用 Flash 加密块，同时将 FLASH_CRYPT_CFG eFuse 的值编程为 0xF。
- Flash 加密块将生成 AES-256 位密钥，并将其储存于 BLOCK1 eFuse 中。该操作在硬件中执行，软件将无法访问此密钥。
- 接着，Flash 加密块将加密 Flash 的内容（根据分区表的标记值）。原地加密可能会有耗时（取决于大分区的耗时）。
- 随后，第二阶段引导加载程序将在 flash_crypt_cnt (=00000001b) 中设置第一个可用位，从而标记已加密的 Flash 内容（偶数位）。
- 在*释放模式*下，第二阶段引导加载程序将把 download_dis_encrypt、download_dis_decrypt 和 download_dis_cache 的 eFuse 位改写为 1，防止 UART 引导加载程序解密 Flash 的内容。同时也将写保护 FLASH_CRYPT_CNT 的 eFuse 位。
- 在*开发模式*下，第二阶段引导加载程序将仅改写 download_dis_decrypt 和 download_dis_cache 的 eFuse 位，从而允许 UART 引导加载程序重新烧录加密的二进制文件。同时将不会写保护 FLASH_CRYPT_CNT 的 eFuse 位。
- 然后，第二阶段引导加载程序重启设备并开始执行加密映像，同时将透明解密 Flash 的内容并将其加载至 IRAM。

在开发阶段常需编写不同的明文 Flash 映像，以及测试 Flash 的加密过程。这要求 UART 下载模式能够根据需求不断加载新的明文映像。但是，在量产和生产过程中，出于安全考虑，UART 下载模式不应有权限访问 Flash 内容。因此需要有两种不同的 ESP32 配置：一种用于开发，另一种用于生产。以下章节介绍了 Flash 加密的*开发模式*和*释放模式*及其使用指南。

重要： 顾名思义，开发模式应 **仅开发过程**使用，因为该模式可以修改和回读加密的 Flash 内容。

4.15.4 设置 Flash 加密的步骤

开发模式

可使用 ESP32 内部生成的密钥或外部主机生成的密钥在开发中运行 Flash 加密。

使用 ESP32 生成的 Flash 加密密钥

正如上文所说，*开发模式*允许用户使用 UART 下载模式多次下载明文映像。需完成以下步骤测试 Flash 加密过程：

- 确保您的 ESP32 设备有*Flash 加密过程中使用的 eFuse* 中所示的 Flash 加密 eFuse 的默认设置。
- 可在 $IDF_PATH/examples/security/flash_encryption 文件夹中找到 Flash 加密的示例应用程序。该示例应用程序中有显示 Flash 加密的状态（启用或关闭）以及 FLASH_CRYPT_CNT eFuse 值。
- 在第二阶段引导加载程序中启用 Flash 加密支持。请前往*Project Configuration Menu*，选择 “Security Features”。
- 选择*Enable flash encryption on boot*。
- 默认设置模式为 **开发模式**。
- 在引导加载程序 config 下选择适当详细程度的日志。
- 启用 Flash 加密将增大引导加载程序，因而可能需更新分区表偏移。请参见 secure-boot-bootloader-size。
- 保存配置并退出。

构建并烧录完整的映像包括：引导加载程序、分区表和 app。这些分区最初以未加密形式写入 Flash。

```
idf.py flash monitor
```

一旦烧录完成，设备将重置，在下次启动时，第二阶段引导加载程序将加密 Flash 的 app 分区，然后重置该分区。现在，示例应用程序将在运行时解密并执行命令。以下是首次启用 Flash 加密后 ESP32 启动时的样例输出。

```
--- idf_monitor on /dev/cu.SLAB_USBtoUART 115200 ---
--- Quit: Ctrl+] | Menu: Ctrl+T | Help: Ctrl+T followed by Ctrl+H ---
ets Jun  8 2016 00:22:57

rst:0x1 (POWERON_RESET),boot:0x13 (SPI_FAST_FLASH_BOOT)
configsip: 0, SPIWP:0xee
clk_drv:0x00,q_drv:0x00,d_drv:0x00,cs0_drv:0x00,hd_drv:0x00,wp_drv:0x00
mode:DIO, clock div:2
load:0x3fff0018,len:4
load:0x3fff001c,len:8452
load:0x40078000,len:13608
load:0x40080400,len:6664
entry 0x40080764
I (28) boot: ESP-IDF v4.0-dev-850-gc4447462d-dirty 2nd stage bootloader
I (29) boot: compile time 15:37:14
I (30) boot: Enabling RNG early entropy source...
I (35) boot: SPI Speed      : 40MHz
I (39) boot: SPI Mode       : DIO
I (43) boot: SPI Flash Size : 4MB
I (47) boot: Partition Table:
I (51) boot: ## Label            Usage          Type ST Offset   Length
I (58) boot:  0 nvs              WiFi data        01 02 0000a000 00006000
I (66) boot:  1 phy_init         RF data          01 01 00010000 00001000
I (73) boot:  2 factory          factory app      00 00 00020000 00100000
I (81) boot: End of partition table
I (85) esp_image: segment 0: paddr=0x00020020 vaddr=0x3f400020␣
↪size=0x0808c ( 32908) map
I (105) esp_image: segment 1: paddr=0x000280b4 vaddr=0x3ffb0000␣
↪size=0x01ea4 (  7844) load
I (109) esp_image: segment 2: paddr=0x00029f60 vaddr=0x40080000␣
↪size=0x00400 (  1024) load
0x40080000: _WindowOverflow4 at esp-idf/esp-idf/components/freertos/
↪xtensa_vectors.S:1778

I (114) esp_image: segment 3: paddr=0x0002a368 vaddr=0x40080400␣
↪size=0x05ca8 ( 23720) load
I (132) esp_image: segment 4: paddr=0x00030018 vaddr=0x400d0018␣
↪size=0x126a8 ( 75432) map
0x400d0018: _flash_cache_start at ??:?

I (159) esp_image: segment 5: paddr=0x000426c8 vaddr=0x400860a8␣
↪size=0x01f4c (  8012) load
0x400860a8: prvAddNewTaskToReadyList at esp-idf/esp-idf/components/
↪freertos/tasks.c:4561

I (168) boot: Loaded app from partition at offset 0x20000
I (168) boot: Checking flash encryption...
I (168) flash_encrypt: Generating new flash encryption key...
I (187) flash_encrypt: Read & write protecting new key...
I (187) flash_encrypt: Setting CRYPT_CONFIG efuse to 0xF
W (188) flash_encrypt: Not disabling UART bootloader encryption
I (195) flash_encrypt: Disable UART bootloader decryption...
I (201) flash_encrypt: Disable UART bootloader MMU cache...
I (208) flash_encrypt: Disable JTAG...
I (212) flash_encrypt: Disable ROM BASIC interpreter fallback...
I (219) esp_image: segment 0: paddr=0x00001020 vaddr=0x3fff0018␣
↪size=0x00004 (     4)
I (227) esp_image: segment 1: paddr=0x0000102c vaddr=0x3fff001c␣
↪size=0x02104 (  8452)
```

(下页继续)

(续上页)

```
I (239) esp_image: segment 2: paddr=0x00003138 vaddr=0x40078000␣
↪size=0x03528 ( 13608)
I (249) esp_image: segment 3: paddr=0x00006668 vaddr=0x40080400␣
↪size=0x01a08 (  6664)
I (657) esp_image: segment 0: paddr=0x00020020 vaddr=0x3f400020␣
↪size=0x0808c ( 32908) map
I (669) esp_image: segment 1: paddr=0x000280b4 vaddr=0x3ffb0000␣
↪size=0x01ea4 (  7844)
I (672) esp_image: segment 2: paddr=0x00029f60 vaddr=0x40080000␣
↪size=0x00400 (  1024)
0x40080000: _WindowOverflow4 at esp-idf/esp-idf/components/freertos/
↪xtensa_vectors.S:1778

I (676) esp_image: segment 3: paddr=0x0002a368 vaddr=0x40080400␣
↪size=0x05ca8 ( 23720)
I (692) esp_image: segment 4: paddr=0x00030018 vaddr=0x400d0018␣
↪size=0x126a8 ( 75432) map
0x400d0018: _flash_cache_start at ??:?

I (719) esp_image: segment 5: paddr=0x000426c8 vaddr=0x400860a8␣
↪size=0x01f4c (  8012)
0x400860a8: prvAddNewTaskToReadyList at esp-idf/esp-idf/components/
↪freertos/tasks.c:4561

I (722) flash_encrypt: Encrypting partition 2 at offset 0x20000...
I (13229) flash_encrypt: Flash encryption completed
I (13229) boot: Resetting with flash encryption enabled...
```

启用 Flash 加密后，在下次启动时输出将显示已启用 Flash 加密。

```
rst:0x1 (POWERON_RESET),boot:0x13 (SPI_FAST_FLASH_BOOT)
configsip: 0, SPIWP:0xee
clk_drv:0x00,q_drv:0x00,d_drv:0x00,cs0_drv:0x00,hd_drv:0x00,wp_drv:0x00
mode:DIO, clock div:2
load:0x3fff0018,len:4
load:0x3fff001c,len:8452
load:0x40078000,len:13652
ho 0 tail 12 room 4
load:0x40080400,len:6664
entry 0x40080764
I (30) boot: ESP-IDF v4.0-dev-850-gc4447462d-dirty 2nd stage bootloader
I (30) boot: compile time 16:32:53
I (31) boot: Enabling RNG early entropy source...
I (37) boot: SPI Speed      : 40MHz
I (41) boot: SPI Mode       : DIO
I (45) boot: SPI Flash Size : 4MB
I (49) boot: Partition Table:
I (52) boot: ## Label            Usage          Type ST Offset   Length
I (60) boot:  0 nvs              WiFi data        01 02 0000a000 00006000
I (67) boot:  1 phy_init         RF data          01 01 00010000 00001000
I (75) boot:  2 factory          factory app      00 00 00020000 00100000
I (82) boot: End of partition table
I (86) esp_image: segment 0: paddr=0x00020020 vaddr=0x3f400020␣
↪size=0x0808c ( 32908) map
I (107) esp_image: segment 1: paddr=0x000280b4 vaddr=0x3ffb0000␣
↪size=0x01ea4 (  7844) load
I (111) esp_image: segment 2: paddr=0x00029f60 vaddr=0x40080000␣
↪size=0x00400 (  1024) load
0x40080000: _WindowOverflow4 at esp-idf/esp-idf/components/freertos/
↪xtensa_vectors.S:1778
```

(下页继续)

(续上页)

```
I (116) esp_image: segment 3: paddr=0x0002a368 vaddr=0x40080400␣
↪size=0x05ca8 ( 23720) load
I (134) esp_image: segment 4: paddr=0x00030018 vaddr=0x400d0018␣
↪size=0x126a8 ( 75432) map
0x400d0018: _flash_cache_start at ??:?

I (162) esp_image: segment 5: paddr=0x000426c8 vaddr=0x400860a8␣
↪size=0x01f4c (  8012) load
0x400860a8: prvAddNewTaskToReadyList at esp-idf/esp-idf/components/
↪freertos/tasks.c:4561

I (171) boot: Loaded app from partition at offset 0x20000
I (171) boot: Checking flash encryption...
I (171) flash_encrypt: flash encryption is enabled (3 plaintext flashes␣
↪left)
I (178) boot: Disabling RNG early entropy source...
I (184) cpu_start: Pro cpu up.
I (188) cpu_start: Application information:
I (193) cpu_start: Project name:     flash-encryption
I (198) cpu_start: App version:      v4.0-dev-850-gc4447462d-dirty
I (205) cpu_start: Compile time:     Jun 17 2019 16:32:52
I (211) cpu_start: ELF file SHA256:  8770c886bdf561a7...
I (217) cpu_start: ESP-IDF:          v4.0-dev-850-gc4447462d-dirty
I (224) cpu_start: Starting app cpu, entry point is 0x40080e4c
0x40080e4c: call_start_cpu1 at esp-idf/esp-idf/components/esp32/cpu_start.
↪c:265

I (0) cpu_start: App cpu up.
I (235) heap_init: Initializing. RAM available for dynamic allocation:
I (241) heap_init: At 3FFAE6E0 len 00001920 (6 KiB): DRAM
I (247) heap_init: At 3FFB2EC8 len 0002D138 (180 KiB): DRAM
I (254) heap_init: At 3FFE0440 len 00003AE0 (14 KiB): D/IRAM
I (260) heap_init: At 3FFE4350 len 0001BCB0 (111 KiB): D/IRAM
I (266) heap_init: At 40087FF4 len 0001800C (96 KiB): IRAM
I (273) cpu_start: Pro cpu start user code
I (291) cpu_start: Starting scheduler on PRO CPU.
I (0) cpu_start: Starting scheduler on APP CPU.

Sample program to check Flash Encryption
This is ESP32 chip with 2 CPU cores, WiFi/BT/BLE, silicon revision 1, 4MB␣
↪external flash
Flash encryption feature is enabled
Flash encryption mode is DEVELOPMENT
Flash in encrypted mode with flash_crypt_cnt = 1
Halting...
```

在此阶段，如果用户希望以加密格式将已修改的明文应用程序映像更新到 Flash 中，可使用以下命令：

```
idf.py encrypted-app-flash monitor
```

加密多重分区

如果所有分区都需以加密格式更新，则可使用以下命令：

```
idf.py encrypted-flash monitor
```

使用主机生成的 Flash 加密密钥

可在主机中预生成 Flash 加密密钥，并将其烧录到 ESP32 的 eFuse 密钥块中。这样，无需明文 Flash 更新便可以在主机上预加密数据并将其烧录到 ESP32 中。该功能允许在开发模式 和释放模式 modes 两模式下加密烧录。

- 确保您的 ESP32 设备有*Flash 加密过程中使用的 eFuse* 中所示 Flash 加密 eFuse 的默认设置。
- 使用 espsecure.py 随机生成一个密钥:

```
espsecure.py generate_flash_encryption_key my_flash_encryption_key.bin
```

- 将该密钥烧录到设备上（一次性）。**该步骤须在第一次加密启动前完成**，否则 ESP32 将随机生成一个软件无权限访问或修改的密钥:

```
espefuse.py --port PORT burn_key flash_encryption my_flash_encryption_key.bin
```

- 在第二阶段引导加载程序中启用 Flash 加密支持。请前往*Project Configuration Menu*，选择 “Security Features”。
- 选择*Enable flash encryption on boot*。
- 模式默认设置为 **开发模式**。
- 在引导加载程序 config 下选择适当详细程度的日志。
- 启用 Flash 加密将增大引导加载程序，因而可能需要更新分区表偏移。可参见 See secure-boot-bootloader-size。
- 保存配置并退出。

构建并烧录完整的映像包括：引导加载程序、分区表和 app。这些分区最初以未加密形式写入 Flash

```
idf.py flash monitor
```

下次启动时，第二阶段引导加载程序将加密 Flash 的 app 分区并重置该分区。现在，示例应用程序将在运行时解密并执行命令。

在此阶段，如果用户希望将新的明文应用程序映像更新到 Flash，应调用以下命令

```
idf.py encrypted-app-flash monitor
```

如何以加密格式重新编程所有分区，可参考加密多重分区。

释放模式

在释放模式下，UART 引导加载程序无法执行 Flash 加密操作，**只能**使用 OTA 方案下载新的明文映像，该方案将在写入 Flash 前加密明文映像。

- 确保您的 ESP32 设备有*Flash 加密过程中使用的 eFuse* 中所示 Flash 加密 eFuse 的默认设置。
- 在第二阶段引导加载程序中启用 Flash 加密支持。请前往*Project Configuration Menu*，选择 “Security Features”。
- 选择*Enable flash encryption on boot*。
- 选择 **释放模式**，模式默认设置为 **开发模式**。请注意，**一旦选择了释放模式，“download_dis_encrypt“ 和 “download_dis_decrypt“ eFuse 位将被编程为禁止 UART 引导加载程序访问 Flash 的内容**。
- 在引导加载程序 config 下选择适当详细程度的日志。
- 启用 Flash 加密将增大引导加载程序，因而可能需要更新分区表偏移。可参见 See secure-boot-bootloader-size。
- 保存配置并退出。

构建并烧录完整的映像包括：引导加载程序、分区表和 app。这些分区最初以未加密形式写入 Flash

```
idf.py flash monitor
```

下次启动时，第二阶段引导加载程序将加密 Flash app 分区并重置该分区。现在，示例应用程序应正确执行命令。

一旦在释放模式下启用 Flash 加密，引导加载程序将写保护 FLASH_CRYPT_CNT eFuse。

应使用 OTA 方案对字段中的明文进行后续更新。详情可参见*OTA*。

可能出现的错误

启用 Flash 加密后，如果 FLASH_CRYPT_CNT eFuse 值中有奇数位，则所有（标有加密标志的）分区都应包含加密密文。以下为 ESP32 加载明文数据会产生的三种典型错误情况：

1. 如果通过明文引导加载程序映像重新更新了引导加载程序分区，则 ROM 加载器将无法加载引导加载程序，并会显示以下错误类型：

```
rst:0x3 (SW_RESET),boot:0x13 (SPI_FAST_FLASH_BOOT)
flash read err, 1000
ets_main.c 371
ets Jun  8 2016 00:22:57

rst:0x7 (TG0WDT_SYS_RESET),boot:0x13 (SPI_FAST_FLASH_BOOT)
flash read err, 1000
ets_main.c 371
ets Jun  8 2016 00:22:57

rst:0x7 (TG0WDT_SYS_RESET),boot:0x13 (SPI_FAST_FLASH_BOOT)
flash read err, 1000
ets_main.c 371
ets Jun  8 2016 00:22:57

rst:0x7 (TG0WDT_SYS_RESET),boot:0x13 (SPI_FAST_FLASH_BOOT)
flash read err, 1000
ets_main.c 371
ets Jun  8 2016 00:22:57

rst:0x7 (TG0WDT_SYS_RESET),boot:0x13 (SPI_FAST_FLASH_BOOT)
flash read err, 1000
ets_main.c 371
ets Jun  8 2016 00:22:57
```

2. 如果引导加载程序已加密，但使用明文分区表映像重新更新了分区表，则引导加载程序将无法读取分区表，并会显示以下错误类型：

```
rst:0x3 (SW_RESET),boot:0x13 (SPI_FAST_FLASH_BOOT)
configsip: 0, SPIWP:0xee
clk_drv:0x00,q_drv:0x00,d_drv:0x00,cs0_drv:0x00,hd_drv:0x00,wp_drv:0x00
mode:DIO, clock div:2
load:0x3fff0018,len:4
load:0x3fff001c,len:10464
ho 0 tail 12 room 4
load:0x40078000,len:19168
load:0x40080400,len:6664
entry 0x40080764
I (60) boot: ESP-IDF v4.0-dev-763-g2c55fae6c-dirty 2nd stage bootloader
I (60) boot: compile time 19:15:54
I (62) boot: Enabling RNG early entropy source...
I (67) boot: SPI Speed      : 40MHz
I (72) boot: SPI Mode       : DIO
I (76) boot: SPI Flash Size : 4MB
E (80) flash_parts: partition 0 invalid magic number 0x94f6
E (86) boot: Failed to verify partition table
E (91) boot: load partition table error!
```

3. 如果引导加载程序和分区表已加密，但使用明文应用程序映像重新更新了应用程序，则引导加载程序将无法加载新的应用程序，并会显示以下错误类型：

```
rst:0x3 (SW_RESET),boot:0x13 (SPI_FAST_FLASH_BOOT)
configsip: 0, SPIWP:0xee
clk_drv:0x00,q_drv:0x00,d_drv:0x00,cs0_drv:0x00,hd_drv:0x00,wp_drv:0x00
mode:DIO, clock div:2
load:0x3fff0018,len:4
load:0x3fff001c,len:8452
load:0x40078000,len:13616
load:0x40080400,len:6664
entry 0x40080764
I (56) boot: ESP-IDF v4.0-dev-850-gc4447462d-dirty 2nd stage bootloader
I (56) boot: compile time 15:37:14
I (58) boot: Enabling RNG early entropy source...
I (64) boot: SPI Speed      : 40MHz
I (68) boot: SPI Mode       : DIO
I (72) boot: SPI Flash Size : 4MB
I (76) boot: Partition Table:
I (79) boot: ## Label            Usage          Type ST Offset   Length
I (87) boot:  0 nvs              WiFi data        01 02 0000a000 00006000
I (94) boot:  1 phy_init         RF data          01 01 00010000 00001000
I (102) boot:  2 factory          factory app      00 00 00020000 00100000
I (109) boot: End of partition table
E (113) esp_image: image at 0x20000 has invalid magic byte
W (120) esp_image: image at 0x20000 has invalid SPI mode 108
W (126) esp_image: image at 0x20000 has invalid SPI size 11
E (132) boot: Factory app partition is not bootable
E (138) boot: No bootable app partitions in the partition table
```

4.15.5 Flash 加密的要点

- 使用 AES-256 加密 Flash 的内容。Flash 加密密钥存储于 eFuse 内部的芯片中，并（默认）受保护防止软件访问。
- *flash 加密算法*采用的是 AES-256，其中密钥随着 Flash 的每个 32 字节块的偏移地址“调整”。这意味着，每个 32 字节块（2 个连续的 16 字节 AES 块）使用从 Flash 加密密钥中产生的一个特殊密钥进行加密。
- 通过 ESP32 的 Flash 缓存映射功能，Flash 可支持透明访问——读取任何映射到地址空间的 Flash 区域时，都将透明解密该区域。

  为便于访问，某些数据分区最好保持未加密状态，或者也可使用对已加密数据无效的 Flash 友好型更新算法。由于 NVS 库无法与 Flash 加密直接兼容，因此无法加密非易失性存储器的 NVS 分区。详情可参见*NVS 加密*。
- 如果可能已启用 Flash 加密，则编写*使用加密 flash* 的代码时，编程人员须小心谨慎。
- 如果已启用安全启动，则重新烧录加密设备的引导加载程序则需要“可重新烧录”的安全启动摘要（可参见*Flash 加密与安全启动*）。

注解： 同时启用安全启动和 Flash 加密后，引导加载程序 app 二进制文件 `bootloader.bin` 可能会过大。参见 secure-boot-bootloader-size。

重要： 在首次启动加密过程中，请勿中断 ESP32 的电源。如果电源中断，Flash 的内容将受到破坏，并需要重新烧录未加密数据。而这类重新烧录将不计入烧录限制次数。

4.15.6 使用加密的 Flash

ESP32 app 代码可通过调用函数*esp_flash_encryption_enabled()* 来确认当前是否已启用 Flash 加密。同时，设备可通过调用函数*esp_get_flash_encryption_mode()* 来识别使用的 Flash 加密模式。

启用 Flash 加密后，使用代码访问 Flash 内容时需加注意。

Flash 加密的范围

只要 FLASH_CRYPT_CNT eFuse 设置为奇数位的值，所有通过 MMU 的 Flash 缓存访问的 Flash 内容都将被透明解密。包括：

- Flash 中可执行的应用程序代码 (IROM)。
- 所有存储于 Flash 中的只读数据 (DROM)。
- 通过函数 spi_flash_mmap() 访问的任意数据。
- ROM 引导加载程序读取的软件引导加载程序映像。

重要： MMU Flash 缓存将无条件解密所有数据。Flash 中未加密存储的数据将通过 Flash 缓存“被透明解密”，并在软件中存储为随机垃圾数据。

读取加密的 Flash

如在不使用 Flash 缓存 MMU 映射的情况下读取数据，推荐使用分区读取函数*esp_partition_read()*。使用该函数时，只有从加密分区读取的数据才会被解密。其他分区的数据将以未加密形式读取。这样，软件便能同样访问加密和未加密的 Flash。

通过其他 SPI 读取 API 读取的数据均未解密：

- 通过函数 spi_flash_read() 读取的数据均未解密。
- 通过 ROM 函数 SPIRead() 读取的数据均未解密（esp-idf app 不支持该函数）。
- 使用非易失性存储器 (NVS) API 存储的数据始终从 Flash 加密的角度进行存储和读取解密。如有需要，则由库提供加密功能。详情可参见*NVS 加密*。

写入加密的 Flash

在可能的情况下，推荐使用分区写入函数 esp_partition_write。使用该函数时，只有向加密分区写入的数据才会被加密。而写入其他分区的数据均未加密。这样，软件便可同样访问加密和未加密的 Flash。

当 write_encrypted 参数设置为“是”时，函数 esp_spi_flash_write 将写入数据。否则，数据将以未加密形式写入。

ROM 函数 esp_rom_spiflash_write_encrypted 将在 Flash 中写入加密数据，而 ROM 函数 SPI-Write 将在 Flash 中写入未加密数据（esp-idf app 不支持上述函数）。

由于数据均采用块加密方式，加密数据最小的写入大小为 16 字节（16 字节对齐）。

4.15.7 更新加密的 Flash

OTA 更新

只要使用了函数 esp_partition_write，则加密分区的 OTA 更新将自动以加密形式写入。

4.15.8 关闭 Flash 加密

若因某些原因意外启用了 Flash 加密，则接下来烧录明文数据时将使 ESP32 软砖（设备不断重启，并报错 flash read err, 1000）。

可通过写入 FLASH_CRYPT_CNT eFuse 再次关闭 Flash 加密（仅适用于开发模式下）：

- 首先，前往*Project Configuration Menu*，在“安全性能”目录下关闭*启用 Flash 加密启动*。
- 退出 menuconfig 并保存最新配置。
- 再次运行 idf.py menuconfig 并复核是否确认已关闭该选项！如果该选项仍处于已启用状态，则引导加载程序会在启动后立即重新启用加密。
- 在未启用 Flash 加密的状态下，运行 idf.py flash 构建并烧录新的引导加载程序与 app。

- 运行 `espefuse.py`（`components/esptool_py/esptool` 中）以关闭 FLASH_CRYPT_CNT:

```
espefuse.py burn_efuse FLASH_CRYPT_CNT
```

重置 ESP32，Flash 加密应处于关闭状态，引导加载程序将正常启动。

4.15.9 Flash 加密的局限性

Flash 加密可防止从加密 Flash 中读取明文，从而保护固件防止未经授权的读取与修改。了解 Flash 加密系统的局限之处亦十分重要：

- Flash 加密功能与密钥同样稳固。因而，推荐您首次启动设备时在设备上生成密钥（默认行为）。如果在设备外生成密钥，请确保遵循正确的后续步骤。
- 并非所有数据都是加密存储。因而在 Flash 上存储数据时，请检查您使用的存储方式（库、API 等）是否支持 Flash 加密。
- Flash 加密无法防止攻击者获取 Flash 的高层次布局信息。这是因为同一个 AES 密钥要用于每对相邻的 16 字节 AES 块。当这些相邻的 16 字节块中包含相同内容时（如空白或填充区域），这些字节块将加密以产生匹配的加密块对。这可能使得攻击者可在加密设备间进行高层次对比（例如，确认两设备是否可能在运行相同的固件版本）。
- 出于相同原因，攻击者始终可获知一对相邻的 16 字节块（32 字节对齐）何时包含相同内容。因此，在 Flash 上存储敏感数据时应牢记这点，并进行相关设置避免该情况发生（可使用计数器字节或每 16 字节设置不同的值即可）。
- 单独使用 Flash 加密可能无法防止攻击者修改本设备的固件。为防止设备上运行未经授权的固件，可搭配 Flash 加密使用*安全启动*。

4.15.10 Flash 加密与安全启动

推荐搭配使用 Flash 加密与安全启动。但是，如果已启用安全启动，则重新烧录设备时会受到其他限制：

- *OTA 更新* 不受限制（如果新的 app 已使用安全启动签名密钥进行正确签名）。
- 只有当选择*可再次烧录* 安全启动模式，且安全启动密钥已预生成并烧录至 ESP32（可参见*安全启动*），则*明文串行 flash 更新* 可实现。在该配置下，`idf.py bootloader` 将生成简化的引导加载程序和安全启动摘要文件，用于在偏移量 0x0 处进行烧录。当进行明文串行重新烧录步骤时，须在烧录其他明文数据前重新烧录此文件。
- 假设未重新烧录引导加载程序，*使用预生成的 Flash 加密密钥重新烧录* 仍可实现。重新烧录引导加载程序时，需在安全启动配置中启用相同的*可重新烧录* 选项。

4.15.11 使用无安全启动的 Flash 加密

尽管 Flash 加密与安全启动可独立使用，但强烈建议您将这二者 **搭配使用**以确保更高的安全性。

4.15.12 Flash 加密的高级功能

以下信息可帮助您使用 Flash 加密的高级功能：

加密分区标志

部分分区默认为已加密。除此之外，可将任意分区标记为需加密：

在*分区表* 文档对 CSV 文件的描述中有标志字段。

该字段通常保留为空白。如果在字段中写入”encrypted”，则这个分区将在分区表中标记为已加密，此处写入的数据也视为加密数据（app 分区同样适用）：

```
# Name,   Type, SubType, Offset,  Size, Flags
nvs,      data, nvs,     0x9000,  0x6000
phy_init, data, phy,     0xf000,  0x1000
factory,  app,  factory, 0x10000, 1M
secret_data, 0x40, 0x01, 0x20000, 256K, encrypted
```

- 默认分区表都不包含任何加密数据分区。
- “app”分区一般都视为加密分区，因此无需将其标记为已加密。
- 如果未启用 Flash 加密，则”encrypted”标记无效。
- 可将带有 `phy_init` 数据的可选 `phy` 分区标记为已加密，保护该数据防止物理访问读取或修改。
- `nvs` 分区无法标记为已加密。

启用 UART 引导加载程序加密/解密

默认情况下，首次启动 Flash 加密过程中将烧录 eFuse `DISABLE_DL_ENCRYPT`、`DISABLE_DL_DECRYPT` 和 `DISABLE_DL_CACHE`：

- `DISABLE_DL_ENCRYPT` 在 UART 引导加载程序启动模式下运行时，终止 Flash 加密操作。
- `DISABLE_DL_DECRYPT` 在 UART 引导加载程序模式下运行时，终止透明 Flash 解密（即使 FLASH_CRYPT_CNT 已设置为在正常操作中启用 Flash 透明解密）。
- `DISABLE_DL_CACHE` 在 UART 引导加载程序模式下运行时终止整个 MMU flash 缓存。

为了完整保存数据，可在首次启动前仅烧录部分 eFuse，并写保护其他部分（未设置值为 0）。例如:

```
espefuse.py --port PORT burn_efuse DISABLE_DL_DECRYPT
espefuse.py --port PORT write_protect_efuse DISABLE_DL_ENCRYPT
```

（请注意，一个写保护位即可关闭这 3 个 eFuse，因此，写保护一个 eFuse 将写保护上述所有 eFuse。所以，在写保护前须设置任意位）。

重要： 由于 `esptool.py` 不支持读取加密的 Flash，因此目前基本无法通过写保护这些 eFuse 来将其保持为未设状态。

重要： 如果保留 `DISABLE_DL_DECRYPT` 未设置（为 0），则实际上将使 Flash 加密无效，因为此时有物理访问权限的攻击者便可使用 UART 引导加载程序模式（使用自定义存根代码）读取 Flash 的内容。

设置 FLASH_CRYPT_CONFIG

`FLASH_CRYPT_CONFIG` eFuse 决定 Flash 加密密钥中随块偏移“调整”的位数。详情可参见*Flash 加密算法*。

首次启动引导加载程序时，该值始终设置为最大 *0xF*。

可手动写入这些 eFuse，并在首次启动前对其写保护，以便选择不同的调整值。但不推荐该操作。

当 `FLASH_CRYPT_CONFIG` 的值为 0 时，强烈建议始终不对其进行写保护。如果该 eFuse 设置为 0，则 Flash 加密密钥中无调整位，且 Flash 加密算法相当于 AES ECB 模式。

4.15.13 技术细节

下节将提供 Flash 加密操作的相关信息。

Flash 加密算法

- AES-256 在 16 字节的数据块上运行。Flash 加密引擎在 32 字节的数据块和 2 个串行 AES 块上加密或解密数据。
- Flash 加密的主密钥存储于 eFuse (BLOCK1) 中，默认受保护防止进一步写入或软件读取。
- AES-256 密钥大小为 256 位（32 字节），从 eFuse block 1 中读取。硬件 AES 引擎使用反字节序密钥于 eFuse 块中存储的字节序。
  - 如果 `CODING_SCHEME` eFuse 设置为 0（默认“无”编码方案），则 eFuse 密钥块为 256 位，且密钥按原方式存储（反字节序）。
  - 如果 `CODING_SCHEME` eFuse 设置为 1（3/4 编码），则 eFuse 密钥块为 192 位（反字节序），信息熵总量减少。硬件 Flash 加密仍在 256 字节密钥上运行，在读取后（字节序未反向），密钥扩展为 `key = key[0:255] + key[64:127]`。
- Flash 加密中使用了逆向 AES 算法，因此 Flash 加密的“加密”操作相当于 AES 解密，而其“解密”操作则相当于 AES 加密。这是为了优化性能，不会影响算法的有效性。
- 每个 32 字节块（2 个相邻的 16 字节 AES 块）都由一个特殊的密钥进行加密。该密钥由 eFuse 中 Flash 加密的主密钥产生，并随 Flash 中该字节块的偏移进行 XOR 运算（一次“密钥调整”）。
- 具体调整量取决于 `FLASH_CRYPT_CONFIG` eFuse 的设置。该 eFuse 共 4 位，每位可对特定范围的密钥位进行 XOR 运算：
  - Bit 1，对密钥的 0-66 位进行 XOR 运算。
  - Bit 2，对密钥的 67-131 位进行 XOR 运算。
  - Bit 3，对密钥的 132-194 位进行 XOR 运算。
  - Bit 4，对密钥的 195-256 位进行 XOR 运算。

  建议将 `FLASH_CRYPT_CONFIG` 的值始终保留为默认值 *0xF*，这样所有密钥位都随块偏移进行 XOR 运算。详情可参见设置 *FLASH_CRYPT_CONFIG*。
- 块偏移的 19 个高位（第 5-23 位）由 Flash 加密的主密钥进行 XOR 运算。选定该范围的原因为：Flash 的最大尺寸为 16MB（24 位），每个块大小为 32 字节，因而 5 个最低有效位始终为 0。
- 从 19 个块偏移位中每个位到 Flash 加密密钥的 256 位都有一个特殊的映射，以决定与哪个位进行 XOR 运算。有关完整映射可参见 `espsecure.py` 源代码中的变量 `_FLASH_ENCRYPTION_TWEAK_PATTERN`。
- 有关在 Python 中实现的完整 Flash 加密算法，可参见 `espsecure.py` 源代码中的函数 *_flash_encryption_operation()*。

4.16 ESP-IDF FreeRTOS SMP Changes

4.16.1 Overview

The vanilla FreeRTOS is designed to run on a single core. However the ESP32 is dual core containing a Protocol CPU (known as **CPU 0** or **PRO_CPU**) and an Application CPU (known as **CPU 1** or **APP_CPU**). The two cores are identical in practice and share the same memory. This allows the two cores to run tasks interchangeably between them.

The ESP-IDF FreeRTOS is a modified version of vanilla FreeRTOS which supports symmetric multiprocessing (SMP). ESP-IDF FreeRTOS is based on the Xtensa port of FreeRTOS v10.2.0. This guide outlines the major differences between vanilla FreeRTOS and ESP-IDF FreeRTOS. The API reference for vanilla FreeRTOS can be found via https://www.freertos.org/a00106.html

For information regarding features that are exclusive to ESP-IDF FreeRTOS, see *ESP-IDF FreeRTOS Additions*.

Tasks and Task Creation: Use *`xTaskCreatePinnedToCore()`* or *`xTaskCreateStaticPinnedToCore()`* to create tasks in ESP-IDF FreeRTOS. The last parameter of the two functions is `xCoreID`. This parameter specifies which core the task is pinned to. Acceptable values are `0` for **PRO_CPU**, `1` for **APP_CPU**, or `tskNO_AFFINITY` which allows the task to run on both.

Round Robin Scheduling: The ESP-IDF FreeRTOS scheduler implements a “Best Effort Round-Robin Scheduling” instead of the ideal Round-Robin scheduling in vanilla FreeRTOS.

Scheduler Suspension: Suspending the scheduler in ESP-IDF FreeRTOS will only affect the scheduler on the the calling core. In other words, calling *`vTaskSuspendAll()`* on **PRO_CPU** will not prevent **APP_CPU** from scheduling, and vice versa. Use critical sections or semaphores instead for simultaneous access protection.

Tick Interrupt Synchronicity: Tick interrupts of **PRO_CPU** and **APP_CPU** are not synchronized. Do not expect to use `vTaskDelay()` or `vTaskDelayUntil()` as an accurate method of synchronizing task execution between the two cores. Use a counting semaphore instead as their context switches are not tied to tick interrupts due to preemption.

Critical Sections & Disabling Interrupts: In ESP-IDF FreeRTOS, critical sections are implemented using mutexes. Entering critical sections involve taking a mutex, then disabling the scheduler and interrupts of the calling core. However the other core is left unaffected. If the other core attemps to take same mutex, it will spin until the calling core has released the mutex by exiting the critical section.

Floating Point Arithmetic: The ESP32 supports hardware acceleration of single precision floating point arithmetic (`float`). However the use of hardware acceleration leads to some behavioral restrictions in ESP-IDF FreeRTOS. Therefore, tasks that utilize `float` will automatically be pinned to a core if not done so already. Furthermore, `float` cannot be used in interrupt service routines.

Thread Local Storage Pointers & Deletion Callbacks: Deletion callbacks are called automatically during task deletion and are used to free memory pointed to by TLSP. Call `vTaskSetThreadLocalStoragePointerAndDelCallback()` to set TLSP and Deletion Callbacks.

Configuring ESP-IDF FreeRTOS: Several aspects of ESP-IDF FreeRTOS can be set in the project configuration (`idf.py menuconfig`) such as running ESP-IDF in Unicore (single core) Mode, or configuring the number of Thread Local Storage Pointers each task will have.

It is not necessary to manually start the FreeRTOS scheduler by calling `vTaskStartScheduler()`. In ESP-IDF the scheduler is started by the 应用程序的启动流程 and is already running when the `app_main` function is called (see *Running the main task* for details).

4.16.2 Tasks and Task Creation

Tasks in ESP-IDF FreeRTOS are designed to run on a particular core, therefore two new task creation functions have been added to ESP-IDF FreeRTOS by appending `PinnedToCore` to the names of the task creation functions in vanilla FreeRTOS. The vanilla FreeRTOS functions of `xTaskCreate()` and `xTaskCreateStatic()` have led to the addition of `xTaskCreatePinnedToCore()` and `xTaskCreateStaticPinnedToCore()` in ESP-IDF FreeRTOS

For more details see freertos/tasks.c

The ESP-IDF FreeRTOS task creation functions are nearly identical to their vanilla counterparts with the exception of the extra parameter known as `xCoreID`. This parameter specifies the core on which the task should run on and can be one of the following values.

- `0` pins the task to **PRO_CPU**
- `1` pins the task to **APP_CPU**
- `tskNO_AFFINITY` allows the task to be run on both CPUs

For example `xTaskCreatePinnedToCore(tsk_callback, "APP_CPU Task", 1000, NULL, 10, NULL, 1)` creates a task of priority 10 that is pinned to **APP_CPU** with a stack size of 1000 bytes. It should be noted that the `uxStackDepth` parameter in vanilla FreeRTOS specifies a task's stack depth in terms of the number of words, whereas ESP-IDF FreeRTOS specifies the stack depth in terms of bytes.

Note that the vanilla FreeRTOS functions `xTaskCreate()` and `xTaskCreateStatic()` have been defined in ESP-IDF FreeRTOS as inline functions which call `xTaskCreatePinnedToCore()` and `xTaskCreateStaticPinnedToCore()` respectively with `tskNO_AFFINITY` as the `xCoreID` value.

Each Task Control Block (TCB) in ESP-IDF stores the `xCoreID` as a member. Hence when each core calls the scheduler to select a task to run, the `xCoreID` member will allow the scheduler to determine if a given task is permitted to run on the core that called it.

4.16.3 Scheduling

The vanilla FreeRTOS implements scheduling in the `vTaskSwitchContext()` function. This function is responsible for selecting the highest priority task to run from a list of tasks in the Ready state known as the Ready

Tasks List (described in the next section). In ESP-IDF FreeRTOS, each core will call `vTaskSwitchContext()` independently to select a task to run from the Ready Tasks List which is shared between both cores. There are several differences in scheduling behavior between vanilla and ESP-IDF FreeRTOS such as differences in Round Robin scheduling, scheduler suspension, and tick interrupt synchronicity.

Round Robin Scheduling

Given multiple tasks in the Ready state and of the same priority, vanilla FreeRTOS implements Round Robin scheduling between multiple ready state tasks of the same priority. This will result in running those tasks in turn each time the scheduler is called (e.g. when the tick interrupt occurs or when a task blocks/yields).

On the other hand, it is not possible for the ESP-IDF FreeRTOS scheduler to implement perfect Round Robin due to the fact that a particular task may not be able to run on a particular core due to the following reasons:

- The task is pinned to the another core.
- For unpinned tasks, the task is already being run by another core.

Therefore, when a core searches the ready state task list for a task to run, the core may need to skip over a few tasks in the same priority list or drop to a lower priority in order to find a ready state task that the core can run.

The ESP-IDF FreeRTOS scheduler implements a Best Effort Round Robin scheduling for ready state tasks of the same priority by ensuring that tasks that have been selected to run will be placed at the back of the list, thus giving unselected tasks a higher priority on the next scheduling iteration (i.e., the next tick interrupt or yield)

The following example demonstrates the Best Effort Round Robin Scheduling in action. Assume that:

- There are four ready state tasks of the same priority `AX, B0, C1, D1` where: - The priority is the current highest priority with ready state tasks - The first character represents the task's names (i.e., `A, B, C, D`) - And the second character represents the tasks core pinning (and `X` means unpinned)
- The task list is always searched from the head

```
-------------------------------------------------------------------------------

1. Starting state. None of the ready state tasks have been selected to run

Head [ AX , B0 , C1 , D0 ] Tail

-------------------------------------------------------------------------------

2. Core 0 has tick interrupt and searches for a task to run.
  Task A is selected and is moved to the back of the list

Core0--|
Head [ AX , B0 , C1 , D0 ] Tail

                       0
Head [ B0 , C1 , D0 , AX ] Tail

-------------------------------------------------------------------------------

3. Core 1 has a tick interrupt and searches for a task to run.
  Task B cannot be run due to incompatible affinity, so core 1 skips to Task C.
  Task C is selected and is moved to the back of the list

Core1-------|          0
Head [ B0 , C1 , D0 , AX ] Tail

                  0    1
Head [ B0 , D0 , AX , C1 ] Tail

-------------------------------------------------------------------------------
```

(下页继续)

(续上页)

```
4. Core 0 has another tick interrupt and searches for a task to run.
  Task B is selected and moved to the back of the list


Core0--|              1
Head [ B0 , D0 , AX , C1 ] Tail

                  1    0
Head [ D0 , AX , C1 , B0 ] Tail

-------------------------------------------------------------------------------

5. Core 1 has another tick and searches for a task to run.
  Task D cannot be run due to incompatible affinity, so core 1 skips to Task A
  Task A is selected and moved to the back of the list

Core1-------|         0
Head [ D0 , AX , C1 , B0 ] Tail

                  0    1
Head [ D0 , C1 , B0 , AX ] Tail
```

The implications to users regarding the Best Effort Round Robin Scheduling:

- Users cannot expect multiple ready state tasks of the same priority to run sequentially (as is the case in Vanilla FreeRTOS). As demonstrated in the example above, a core may need to skip over tasks.
- However, given enough ticks, a task will eventually be given some processing time.
- If a core cannot find a task runnable task at the highest ready state priority, it will drop to a lower priority to search for tasks.
- To achieve ideal round robin scheduling, users should ensure that all tasks of a particular priority are pinned to the same core.

Scheduler Suspension

In vanilla FreeRTOS, suspending the scheduler via *vTaskSuspendAll()* will prevent calls of `vTaskSwitchContext` from context switching until the scheduler has been resumed with *xTaskResumeAll()*. However servicing ISRs are still permitted. Therefore any changes in task states as a result from the current running task or ISRs will not be executed until the scheduler is resumed. Scheduler suspension in vanilla FreeRTOS is a common protection method against simultaneous access of data shared between tasks, whilst still allowing ISRs to be serviced.

In ESP-IDF FreeRTOS, `xTaskSuspendAll()` will only prevent calls of `vTaskSwitchContext()` from switching contexts on the core that called for the suspension. Hence if **PRO_CPU** calls *vTaskSuspendAll()*, **APP_CPU** will still be able to switch contexts. If data is shared between tasks that are pinned to different cores, scheduler suspension is **NOT** a valid method of protection against simultaneous access. Consider using critical sections (disables interrupts) or semaphores (does not disable interrupts) instead when protecting shared resources in ESP-IDF FreeRTOS.

In general, it's better to use other RTOS primitives like mutex semaphores to protect against data shared between tasks, rather than *vTaskSuspendAll()*.

Tick Interrupt Synchronicity

In ESP-IDF FreeRTOS, tasks on different cores that unblock on the same tick count might not run at exactly the same time due to the scheduler calls from each core being independent, and the tick interrupts to each core being unsynchronized.

In vanilla FreeRTOS the tick interrupt triggers a call to `xTaskIncrementTick()` which is responsible for incrementing the tick counter, checking if tasks which have called *vTaskDelay()* have fulfilled their delay period, and

moving those tasks from the Delayed Task List to the Ready Task List. The tick interrupt will then call the scheduler if a context switch is necessary.

In ESP-IDF FreeRTOS, delayed tasks are unblocked with reference to the tick interrupt on PRO_CPU as PRO_CPU is responsible for incrementing the shared tick count. However tick interrupts to each core might not be synchronized (same frequency but out of phase) hence when PRO_CPU receives a tick interrupt, APP_CPU might not have received it yet. Therefore if multiple tasks of the same priority are unblocked on the same tick count, the task pinned to PRO_CPU will run immediately whereas the task pinned to APP_CPU must wait until APP_CPU receives its out of sync tick interrupt. Upon receiving the tick interrupt, APP_CPU will then call for a context switch and finally switches contexts to the newly unblocked task.

Therefore, task delays should **NOT** be used as a method of synchronization between tasks in ESP-IDF FreeRTOS. Instead, consider using a counting semaphore to unblock multiple tasks at the same time.

4.16.4 Critical Sections & Disabling Interrupts

Vanilla FreeRTOS implements critical sections with `taskENTER_CRITICAL()` which calls `portDISABLE_INTERRUPTS()`. This prevents preemptive context switches and servicing of ISRs during a critical section. Therefore, critical sections are used as a valid protection method against simultaneous access in vanilla FreeRTOS.

On the other hand, ESP32 has no hardware method for cores to disable each other's interrupts. Calling `portDISABLE_INTERRUPTS()` will have no effect on the interrupts of the other core. Therefore, disabling interrupts is **NOT** a valid protection method against simultaneous access to shared data as it leaves the other core free to access the data even if the current core has disabled its own interrupts.

For this reason, ESP-IDF FreeRTOS implements critical sections using special mutexes, referred by `portMUX_Type` objects. These are implemented on top of a specific spinlock component. Calls to `taskENTER_CRITICAL` or `taskEXIT_CRITICAL` each provide a spinlock object as an argument. The spinlock is associated with a shared resource requiring access protection. When entering a critical section in ESP-IDF FreeRTOS, the calling core will disable interrupts similar to the vanilla FreeRTOS implementation, and will then take the spinlock and enter the critical section. The other core is unaffected at this point, unless it enters its own critical section and attempts to take the same spinlock. In that case it will spin until the lock is released. Therefore, the ESP-IDF FreeRTOS implementation of critical sections allows a core to have protected access to a shared resource without disabling the other core. The other core will only be affected if it tries to concurrently access the same resource.

The ESP-IDF FreeRTOS critical section functions have been modified as follows…

- `taskENTER_CRITICAL(mux)`, `taskENTER_CRITICAL_ISR(mux)`, `portENTER_CRITICAL(mux)`, `portENTER_CRITICAL_ISR(mux)` are all macro defined to call internal function `vPortEnterCritical()`
- `taskEXIT_CRITICAL(mux)`, `taskEXIT_CRITICAL_ISR(mux)`, `portEXIT_CRITICAL(mux)`, `portEXIT_CRITICAL_ISR(mux)` are all macro defined to call internal function `vPortExitCritical()`
- `portENTER_CRITICAL_SAFE(mux)`, `portEXIT_CRITICAL_SAFE(mux)` macro identifies the context of execution, i.e ISR or Non-ISR, and calls appropriate critical section functions (`port*_CRITICAL` in Non-ISR and `port*_CRITICAL_ISR` in ISR) in order to be in compliance with Vanilla FreeRTOS.

For more details see esp_hw_support/include/soc/spinlock.h, freertos/include/freertos/task.h, and freertos/tasks.c

It should be noted that when modifying vanilla FreeRTOS code to be ESP-IDF FreeRTOS compatible, it is trivial to modify the type of critical section called as they are all defined to call the same function. As long as the same spinlock is provided upon entering and exiting, the exact macro or function used for the call should not matter.

4.16.5 Floating Point Arithmetic

ESP-IDF FreeRTOS implements Lazy Context Switching for FPUs. In other words, the state of a core's FPU registers are not immediately saved when a context switch occurs. Therefore, tasks that utilize `float` must be pinned to a particular core upon creation. If not, ESP-IDF FreeRTOS will automatically pin the task in question to whichever core the task was running on upon the task's first use of `float`. Likewise due to Lazy Context Switching,

only interrupt service routines of lowest priority (that is it the Level 1) can use `float`, higher priority interrupts do not support FPU usage.

ESP32 does not support hardware acceleration for double precision floating point arithmetic (`double`). Instead `double` is implemented via software hence the behavioral restrictions with regards to `float` do not apply to `double`. Note that due to the lack of hardware acceleration, `double` operations may consume significantly larger amount of CPU time in comparison to `float`.

4.16.6 Task Deletion

In FreeRTOS task deletion the freeing of task memory will occur immediately (within *`vTaskDelete()`*) if the task being deleted is not currently running or is not pinned to the other core (with respect to the core *`vTaskDelete()`* is called on). TLSP deletion callbacks will also run immediately if the same conditions are met.

However, calling *`vTaskDelete()`* to delete a task that is either currently running or pinned to the other core will still result in the freeing of memory being delegated to the Idle Task.

4.16.7 Thread Local Storage Pointers & Deletion Callbacks

Thread Local Storage Pointers (TLSP) are pointers stored directly in the TCB. TLSP allow each task to have its own unique set of pointers to data structures. However task deletion behavior in vanilla FreeRTOS does not automatically free the memory pointed to by TLSP. Therefore if the memory pointed to by TLSP is not explicitly freed by the user before task deletion, memory leak will occur.

ESP-IDF FreeRTOS provides the added feature of Deletion Callbacks. Deletion Callbacks are called automatically during task deletion to free memory pointed to by TLSP. Each TLSP can have its own Deletion Callback. Note that due to the to *Task Deletion* behavior, there can be instances where Deletion Callbacks are called in the context of the Idle Tasks. Therefore Deletion Callbacks **should never attempt to block** and critical sections should be kept as short as possible to minimize priority inversion.

Deletion callbacks are of type `void (*TlsDeleteCallbackFunction_t)( int, void * )` where the first parameter is the index number of the associated TLSP, and the second parameter is the TLSP itself.

Deletion callbacks are set alongside TLSP by calling *`vTaskSetThreadLocalStoragePointerAndDelCallback()`*. Calling the vanilla FreeRTOS function *`vTaskSetThreadLocalStoragePointer()`* will simply set the TLSP's associated Deletion Callback to *NULL* meaning that no callback will be called for that TLSP during task deletion. If a deletion callback is *NULL*, users should manually free the memory pointed to by the associated TLSP before task deletion in order to avoid memory leak.

For more details see *FreeRTOS API reference*.

4.16.8 Configuring ESP-IDF FreeRTOS

The ESP-IDF FreeRTOS can be configured in the project configuration menu (`idf.py menuconfig`) under `Component Config/FreeRTOS`. The following section highlights some of the ESP-IDF FreeRTOS configuration options. For a full list of ESP-IDF FreeRTOS configurations, see *FreeRTOS*

CONFIG_FREERTOS_UNICORE will run ESP-IDF FreeRTOS only on **PRO_CPU**. Note that this is **not equivalent to running vanilla FreeRTOS**. Note that this option may affect behavior of components other than freertos. For more details regarding the effects of running ESP-IDF FreeRTOS on a single core, search for occurences of `CONFIG_FREERTOS_UNICORE` in the ESP-IDF components.

CONFIG_FREERTOS_ASSERT_ON_UNTESTED_FUNCTION will trigger a halt in particular functions in ESP-IDF FreeRTOS which have not been fully tested in an SMP context.

CONFIG_FREERTOS_TASK_FUNCTION_WRAPPER will enclose all task functions within a wrapper function. In the case that a task function mistakenly returns (i.e. does not call *`vTaskDelete()`*), the call flow will return to the wrapper function. The wrapper function will then log an error and abort the application, as illustrated below:

```
E (25) FreeRTOS: FreeRTOS task should not return. Aborting now!
abort() was called at PC 0x40085c53 on core 0
```

4.17 Hardware Abstraction

Hardware abstraction in ESP-IDF are a group of API that allow users to control peripherals at differing levels of abstraction, as opposed to interfacing with hardware using only the ESP-IDF drivers. ESP-IDF Hardware abstraction will likely be useful for users writing high performance bare-metal drivers, or for those attempting to port an ESP chip to another platform.

This guide is split into the following sections:

1. *Architecture*
2. *LL (Low Level) Layer*
3. *HAL (Hardware Abstraction Layer)*

警告: Hardware abstraction API (excluding the driver and `xxx_types.h`) should be considered an experimental feature, thus cannot be considered public API. Hardware abstraction API do not adhere to the API name changing restrictions of ESP-IDF's versioning scheme. In other words, it is possible that Hardware Abstraction API may change in between non-major release versions.

注解: Although this document mainly focuses on hardware abstraction of peripherals (e.g., UART, SPI, I2C), certain layers of hardware abstraction extend to other aspects of hardware as well (e.g., some of the CPU's features are partially abstracted).

4.17.1 Architecture

Hardware abstraction in ESP-IDF is comprised of the following layers, ordered from low level (closer to hardware) to high level (further away from hardware) of abstraction.

- Low Level (LL) Layer
- Hardware Abstraction Layer (HAL)
- Driver Layers

The LL Layer, and HAL are entirely contained within the `hal` component. Each layer is dependent on the layer below it (i.e, driver depends on HAL, HAL depends on LL, LL depends on the register header files).

For a particular peripheral `xxx`, its hardware abstraction will generally consist of the header files described in the table below. Files that are **Target Specific** will have a separate implementation for each target (i.e., a separate copy for each chip). However, the `#include` directive will still be target-independent (i.e., will be the same for different targets) as the build system will automatically include the correct version of the header and source files.

表 21: Hardware Abstraction Header Files

Include Directive	Target-Specific	Description
`#include 'soc/xxx_caps.h"`	Y	This header contains a list of C macros specifying the various capabilities of the ESP32's peripheral `xxx`. Hardware capabilities of a peripheral include things such as the number of channels, DMA support, hardware FIFO/buffer lengths, etc.
`#include "soc/xxx_struct.h"` `#include "soc/xxx_reg.h"`	Y	The two headers contain a representation of a peripheral's registers in C structure and C macro format respectively. Users can operate a peripheral at the register level via either of these two header files.
`#include "soc/xxx_pins.h"`	Y	If certain signals of a peripheral are mapped to a particular pin of the ESP32, their mappings are defined in this header as C macros.
`#include "soc/xxx_periph.h"`	N	This header is mainly used as a convenience header file to automatically include `xxx_caps.h`, `xxx_struct.h`, and `xxx_reg.h`.
`#include "hal/xxx_types.h`	N	This header contains type definitions and macros that are shared among the LL, HAL, and driver layers. Moreover, it is considered public API thus can be included by the application level. The shared types and definitions usually related to non-implementation specific concepts such as the following: • Protocol related types/macros such a frames, modes, common bus speeds, etc. • Features/characteristics of an `xxx` peripheral that are likely to be present on any implementation (implementation-independent) such as channels, operating modes, signal amplification or attenuation intensities, etc.
`#include "hal/xxx_ll.h"`	Y	This header contains the Low Level (LL) Layer of hardware abstraction. LL Layer API are primarily used to abstract away register operations into readable functions.
`#include "hal/xxx_hal.h"`	Y	The Hardware Abstraction Layer (HAL) is used to abstract away peripheral operation steps into functions (e.g., reading a buffer, starting a transmission, handling an event, etc). The HAL is built on top of the LL Layer.
`#include "driver/xxx.h"`	N	The driver layer is the highest level of ESP-IDF's hardware abstraction. Driver layer API are meant to be called from ESP-IDF applications, and internally utilize OS primitives. Thus, driver layer API are event-driven, and can used in a multi-threaded environment.

4.17.2 LL (Low Level) Layer

The primary purpose of the LL Layer is to abstract away register field access into more easily understandable functions. LL functions essentially translate various in/out arguments into the register fields of a peripheral in the form of get/set functions. All the necessary bit shifting, masking, offsetting, and endianness of the register fields should be handled by the LL functions.

```
//Inside xxx_ll.h

static inline void xxx_ll_set_baud_rate(xxx_dev_t *hw,
                                        xxx_ll_clk_src_t clock_source,
                                        uint32_t baud_rate) {
    uint32_t src_clk_freq = (source_clk == XXX_SCLK_APB) ? APB_CLK_FREQ : REF_CLK_
↪FREQ;
    uint32_t clock_divider = src_clk_freq / baud;
    // Set clock select field
    hw->clk_div_reg.divider = clock_divider >> 4;
    // Set clock divider field
    hw->config.clk_sel = (source_clk == XXX_SCLK_APB) ? 0 : 1;
```

(下页继续)

(续上页)

```
}

static inline uint32_t xxx_ll_get_rx_byte_count(xxx_dev_t *hw) {
    return hw->status_reg.rx_cnt;
}
```

The code snippet above illustrates typical LL functions for a peripheral `xxx`. LL functions typically have the following characteristics:

- All LL functions are defined as `static inline` so that there is minimal overhead when calling these functions due to compiler optimization.
- The first argument should be a pointer to a `xxx_dev_t` type. The `xxx_dev_t` type is a structure representing the peripheral's registers, thus the first argument is always a pointer to the starting address of the peripheral's registers. Note that in some cases where the peripheral has multiple channels with identical register layouts, `xxx_dev_t *hw` may point to the registers of a particular channel instead.
- LL functions should be short and in most cases are deterministic. In other words, the worst case runtime of the LL function can be determined at compile time. Thus, any loops in LL functions should be finite bounded; however, there are currently a few exceptions to this rule.
- LL functions are not thread safe, it is the responsibility of the upper layers (driver layer) to ensure that registers or register fields are not accessed concurrently.

4.17.3 HAL (Hardware Abstraction Layer)

The HAL layer models the operational process of a peripheral as a set of general steps, where each step has an associated function. For each step, the details of a peripheral's register implementation (i.e., which registers need to be set/read) are hidden (abstracted away) by the HAL. By modelling peripheral operation as a set of functional steps, any minor hardware implementation differences of the peripheral between different targets or chip versions can be abstracted away by the HAL (i.e., handled transparently). In other words, the HAL API for a particular peripheral will remain mostly the same across multiple targets/chip versions.

The following HAL function examples are selected from the Watchdog Timer HAL as each function maps to one of the steps in a WDT's operation life cycle, thus illustrating how a HAL abstracts a peripheral's operation into functional steps.

```
// Initialize one of the WDTs
void wdt_hal_init(wdt_hal_context_t *hal, wdt_inst_t wdt_inst, uint32_t prescaler,␣
↪bool enable_intr);

// Configure a particular timeout stage of the WDT
void wdt_hal_config_stage(wdt_hal_context_t *hal, wdt_stage_t stage, uint32_t␣
↪timeout, wdt_stage_action_t behavior);

// Start the WDT
void wdt_hal_enable(wdt_hal_context_t *hal);

// Feed (i.e., reset) the WDT
void wdt_hal_feed(wdt_hal_context_t *hal);

// Handle a WDT timeout
void wdt_hal_handle_intr(wdt_hal_context_t *hal);

// Stop the WDT
void wdt_hal_disable(wdt_hal_context_t *hal);

// De-initialize the WDT
void wdt_hal_deinit(wdt_hal_context_t *hal);
```

HAL functions will generally have the following characteristics:

- The first argument to a HAL function has the `xxx_hal_context_t *` type. The HAL context type is used to store information about a particular instance of the peripheral (i.e. the context instance). A HAL context is initialized by the `xxx_hal_init()` function and can store information such as the following:
  - The channel number of this instance
  - Pointer to the peripheral's (or channel's) registers (i.e., a `xxx_dev_t *` type)
  - Information about an ongoing transaction (e.g., pointer to DMA descriptor list in use)
  - Some configuration values for the instance (e.g., channel configurations)
  - Variables to maintain state information regarding the instance (e.g., a flag to indicate if the instance is waiting for transaction to complete)
- HAL functions should not contain any OS primitives such as queues, semaphores, mutexes, etc. All synchronization/concurrency should be handled at higher layers (e.g., the driver).
- Some peripherals may have steps that cannot be further abstracted by the HAL, thus will end up being a direct wrapper (or macro) for an LL function.
- Some HAL functions may be placed in IRAM thus may carry an `IRAM_ATTR` or be placed in a separate `xxx_hal_iram.c` source file.

4.18 High-Level Interrupts

The Xtensa architecture has support for 32 interrupts, divided over 8 levels, plus an assortment of exceptions. On the ESP32, the interrupt mux allows most interrupt sources to be routed to these interrupts using the *interrupt allocator*. Normally, interrupts will be written in C, but ESP-IDF allows high-level interrupts to be written in assembly as well, allowing for very low interrupt latencies.

4.18.1 Interrupt Levels

Level	Symbol	Remark
1	N/A	Exception and level 0 interrupts. Handled by ESP-IDF
2-3	N/A	Medium level interrupts. Handled by ESP-IDF
4	xt_highint4	Normally used by ESP-IDF debug logic
5	xt_highint5	Free to use
NMI	xt_nmi	Free to use
dbg	xt_debugexception	Debug exception. Called on e.g. a BREAK instruction.

Using these symbols is done by creating an assembly file (suffix .S) and defining the named symbols, like this:

```
    .section .iram1,"ax"
    .global     xt_highint5
    .type       xt_highint5,@function
    .align      4
xt_highint5:
    ... your code here
    rsr     a0, EXCSAVE_5
    rfi     5
```

For a real-life example, see the esp_system/port/soc/esp32/dport_panic_highint_hdl.S file; the panic handler interrupt is implemented there.

4.18.2 Notes

- Do not call C code from a high-level interrupt; because these interrupts still run in critical sections, this can cause crashes. (The panic handler interrupt does call normal C code, but this is OK because there is no intention of returning to the normal code flow afterwards.)
- Make sure your assembly code gets linked in. If the interrupt handler symbol is the only symbol the rest of the code uses from this file, the linker will take the default ISR instead and not link the assembly file into the final project. To get around this, in the assembly file, define a symbol, like this:

```
    .global ld_include_my_isr_file
ld_include_my_isr_file:
```

The symbol is called `ld_include_my_isr_file` here but can have any arbitrary name not defined anywhere else.

Then, in the component CMakeLists.txt, add this file as an unresolved symbol to the ld command line arguments:

```
target_link_libraries(${COMPONENT_TARGET} "-u ld_include_my_isr_file")
```

If using the legacy Make build system, add the following to component.mk, instead:

```
COMPONENT_ADD_LDFLAGS := -u ld_include_my_isr_file
```

This should cause the linker to always include a file defining `ld_include_my_isr_file`, causing the ISR to always be linked in.

- High-level interrupts can be routed and handled using esp_intr_alloc and associated functions. The handler and handler arguments to esp_intr_alloc must be NULL, however.
- In theory, medium priority interrupts could also be handled in this way. For now, ESP-IDF does not support this.

4.19 JTAG 调试

本文将介绍如何安装 ESP32 的 OpenOCD 调试环境，以及如何使用 GDB 来调试 ESP32 的应用程序。本文结构如下：

引言 介绍本指南主旨。
工作原理 介绍 ESP32、JTAG（Joint Test Action Group）接口、OpenOCD 和 GDB 如何相互连接，从而实现 ESP32 的调试功能。
选择 *JTAG* 适配器 介绍有关 JTAG 硬件适配器的选择及参照标准。
安装 *OpenOCD* 介绍如何安装官方预编译好的 OpenOCD 软件包并验证是否安装成功。
配置 *ESP32* 目标板 介绍如何设置 OpenOCD 软件并安装 JTAG 硬件适配器，这两者共同组成最终的调试目标。
启动调试器 介绍如何从*Eclipse 集成开发环境* 和*命令行终端* 启动 GDB 调试会话。
调试范例 如果你对 GDB 不太熟悉，本小节会分别针对*Eclipse 集成开发环境* 和*命令行终端* 来讲解调试的范例。
从源码构建 *OpenOCD* 介绍如何在*Windows*，*Linux* 和*macOS* 操作系统上从源码构建 OpenOCD。
注意事项和补充内容 介绍使用 OpenOCD 和 GDB 通过 JTAG 接口调试 ESP32 时的注意事项和补充内容。

4.19.1 引言

ESP32 具有两个强大的 Xtensa 内核，支持多种程序架构。ESP-IDF 自带的 FreeRTOS 操作系统支持多核抢占式调度，允许用户以更加直观的方式编写软件。

与此相对地，由于缺乏合适的工具，简便的编程方式也会给程序的调试带来困难，比如找出由两个线程引起的错误，并且这两个线程在单独的 CPU 核上同时运行，那么仅凭 `printf` 语句会花费很长时间来定位该错误。调试此类问题更好 (往往也更快) 的方法是使用调试器，将其连接到处理器的调试端口。

乐鑫已完成 OpenOCD 移植，以支持 ESP32 处理器和多核 FreeRTOS 架构（此作为大多数 ESP32 应用程序的基础）。此外，乐鑫还提供了一些 OpenOCD 本身并不支持的工具，以进一步丰富调试功能。

本文将介绍如何在 Linux、Windows 和 macOS 环境下为 ESP32 安装 OpenOCD，并使用 GDB 进行软件调试。除部分安装流程有所不同外，所有操作系统的软件用户界面和使用流程都是相同的。

注解： 本文使用的图片素材来自于 Ubuntu 16.04 LTS 上 Eclipse Neon 3 软件的截图，不同的操作系统（Windows、macOS 或 Linux）或不同的 Eclipse 软件版本在用户界面上可能会有细微差别。

4.19.2 工作原理

通过 JTAG（Joint Test Action Group）接口使用 OpenOCD 调试 ESP32 时所需要的关键软件和硬件包括 **xtensa-esp32-elf-gdb 调试器**、**OpenOCD 片上调试器**和连接到 **ESP32** 目标的 **JTAG 适配器**，如下图“Application Loading and Monitoring”标志所示。

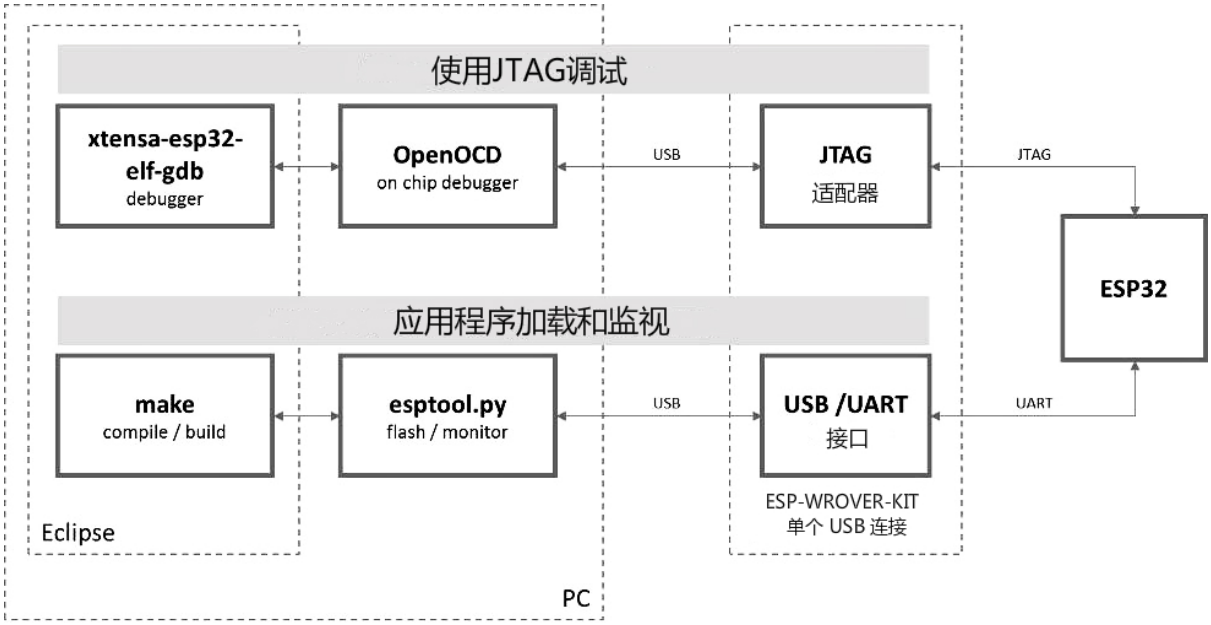

图 32: JTAG 调试 - 概述图

“Application Loading and Monitoring”标志显示一组关键的软件和硬件组件，可用于编译、构建和烧写应用程序到 ESP32 上，以及监视来自 ESP32 的运行诊断信息。

Eclipse 环境集成了 JTAG 调试和应用程序加载、监视的功能，使得软件从编写、编译、加载到调试的迭代过程变得更加快速简单。Eclipse IDE 及其集成的调试软件均适用于 Windows、Linux 和 macOS 平台。

若使用*ESP-WROVER-KIT 开发板*，由于其板载 FT232H 芯片，仅需一根 USB 线即可连接 PC 与 ESP32。FT232H 提供了两路 USB 通道，一路连接到 JTAG，另一路连接到 UART。

根据用户喜好，除了使用 Eclipse 集成开发环境，还可以直接在命令行终端运行 *debugger* 和 *idf.py build*。

4.19.3 选择 JTAG 适配器

上手 JTAG 最快速便捷的方式是使用*ESP-WROVER-KIT 开发板*，因为它板载了 JTAG 调试接口，无需使用外部 JTAG 硬件适配器和额外线缆来连接 JTAG 与 ESP32。ESP-WROVER-KIT 采用 FT2232H 提供的 JTAG 接口，可以稳定运行在 20 MHz 的时钟频率，外接的适配器很难达到这个速度。

如果您想使用单独的 JTAG 适配器，请确保其与 ESP32 的电平电压和 OpenOCD 软件都兼容。ESP32 使用的是业界标准的 JTAG 接口，它未使用（实际上也并不需要）TRST 信号脚。JTAG 使用的 IO 管脚由 VDD_3P3_RTC 电源管脚供电（通常连接到外部 3.3 V 的电源轨），因此 JTAG 硬件适配器的管脚需要能够在该电压范围内正常工作。

在软件方面，OpenOCD 支持相当多数量的 JTAG 适配器，请参阅 OpenOCD 支持的适配器列表（请注意这一列表并不完整），其中还列出了兼容 SWD 接口的适配器，但请注意，ESP32 目前并不支持 SWD。此外，被硬编码为只支持特定产品线的 JTAG 适配器也无法在 ESP32 上工作，例如仅针对 STM32 系列产品的 ST-LINK 适配器。

JTAG 正常工作至少需要连接的信号线有：TDI、TDO、TCK、TMS 和 GND。一些 JTAG 适配器还需要 ESP32 提供一路电源到适配器的某个管脚上（比如 Vtar），用于设置适配器的工作电压。您也可以选择将 SRST 信号线连接到 ESP32 的 CH_PD 管脚上，但请注意，目前 OpenOCD 对该信号线提供的支持相当有限。

ESP-Prog 中展示了使用外部电路板进行调试的实例，方法是将其连接到 ESP32 的 JTAG 管脚上。

4.19.4 安装 OpenOCD

如果您已经按照快速入门 完成了 ESP-IDF 及其 CMake 构建系统的安装，那么 OpenOCD 已经被默认安装到了您的开发系统中。在设置开发环境 结束后，您应该能够在终端中运行如下 OpenOCD 命令:

```
openocd --version
```

终端会输出以下信息（实际版本号可能会更新）：

```
Open On-Chip Debugger  v0.10.0-esp32-20190708 (2019-07-08-11:04)
Licensed under GNU GPL v2
For bug reports, read
    http://openocd.org/doc/doxygen/bugs.html
```

您还可以检查 `OPENOCD_SCRIPTS` 环境变量的值，以确认 OpenOCD 配置文件的路径，Linux 和 macOS 用户可以在终端输入 `echo $OPENOCD_SCRIPTS`，Windows 用户需要输入 `echo %OPENOCD_SCRIPTS%`。如果终端输出了有效路径，则表明您已经正确安装 OpenOCD。

如果无法执行上述步骤，请再次阅读快速入门手册，参考设置安装工具 章节。

注解: 另外也可以从源代码编译 OpenOCD 工具，详细信息请参阅从源码构建 *OpenOCD* 章节。

4.19.5 配置 ESP32 目标板

OpenOCD 安装完成后就可以配置 ESP32 目标（即带 JTAG 接口的 ESP32 板），具体分为以下三个步骤:

- 配置并连接 JTAG 接口
- 运行 OpenOCD
- 上传待调试的应用程序

配置并连接 JTAG 接口

此步骤取决于使用的 JTAG 和 ESP32 板，请参考以下两种情况。

配置 ESP-WROVER-KIT 上的 JTAG 接口 所有版本的 ESP-WROVER-KIT 板子都内置了 JTAG 调试功能，要使其正常工作，还需要设置相关跳帽来启用 JTAG 功能，设置 SPI 闪存电压和配置 USB 驱动程序。具体步骤请参考以下说明。

配置硬件

- 根据*ESP-WROVER-KIT V4.1 入门指南* 文档中设置选项 章节所描述的信息，设置 JP8 便可以启用 JTAG 功能。
- 检查 ESP32 上用于 JTAG 通信的引脚是否被接到了其它硬件上，这可能会影响 JTAG 的工作。

表 22: ESP32 引脚和 JTAG 接口信号

ESP32 引脚	JTAG 信号
MTDO / GPIO15	TDO
MTDI / GPIO12	TDI
MTCK / GPIO13	TCK
MTMS / GPIO14	TMS
GND	GND

配置 USB 驱动 安装和配置 USB 驱动，这样 OpenOCD 才能够与 ESP-WROVER-KIT 板上的 JTAG 接口通信，并且使用 UART 接口上传待烧写的镜像文件。请根据你的操作系统按照以下步骤进行安装配置。

注解： ESP-WROVER-KIT 使用了 FT2232 芯片实现了 JTAG 适配器，所以以下说明同样适用于其他基于 FT2232 的 JTAG 适配器。

Windows

1. 使用标准 USB A / micro USB B 线将 ESP-WROVER-KIT 与计算机相连接，并打开板子的电源。
2. 等待 Windows 识别出 ESP-WROVER-KIT 并且为其安装驱动。如果驱动没有被自动安装，请前往官网 下载并手动安装。
3. 从 Zadig 官网 下载 Zadig 工具（Zadig_X.X.exe）并运行。
4. 在 Zadig 工具中，进入 “Options” 菜单中选中 “List All Devices”。
5. 检查设备列表，其中应该包含两条与 ESP-WROVER-KIT 相关的条目：“Dual RS232-HS (Interface 0)” 和 “Dual RS232-HS (Interface 1)”。驱动的名字应该是 “FTDIBUS (vxxxx)” 并且 USB ID 为：0403 6010。

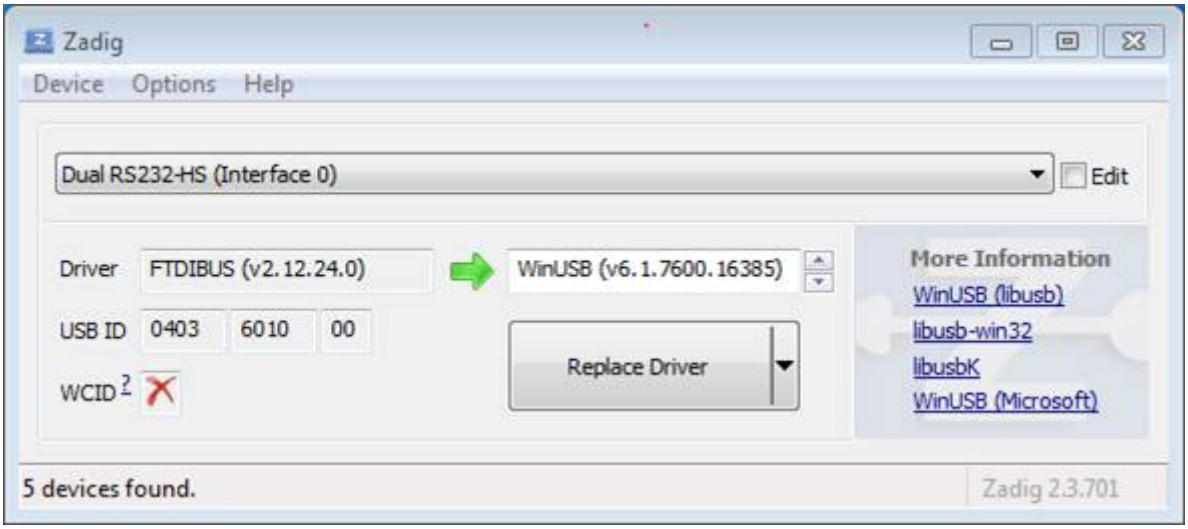

图 33: 在 Zadig 工具中配置 JTAG USB 驱动

6. 第一个设备 “Dual RS232-HS（Interface 0）” 连接到了 ESP32 的 JTAG 端口，此设备原来的 “FTDIBUS (vxxxx)” 驱动需要替换成 “WinUSB (v6xxxxx)”。为此，请选择 “Dual RS232-HS (Interface 0)” 并将驱动重新安装为 “WinUSB (v6xxxxx)”，具体可以参考上图。

注解： 请勿更改第二个设备 “Dual RS232-HS（Interface 1）” 的驱动，它被连接到 ESP32 的串口（UART），用于上传应用程序映像给 ESP32 进行烧写。

现在，ESP-WROVER-KIT 的 JTAG 接口应该可以被 OpenOCD 使用了，想要进一步设置调试环境，请前往*运行 OpenOCD* 章节。

Linux

1. 使用标准 USB A / micro USB B 线将 ESP-WROVER-KIT 与计算机相连接，并打开板子的电源。
2. 打开终端，输入 `ls -l /dev/ttyUSB*` 命令检查操作系统是否能够识别板子的 USB 端口。类似识别结果如下：

```
user-name@computer-name:~/esp$ ls -l /dev/ttyUSB*
crw-rw---- 1 root dialout 188, 0 Jul 10 19:04 /dev/ttyUSB0
crw-rw---- 1 root dialout 188, 1 Jul 10 19:04 /dev/ttyUSB1
```

3. 根据 OpenOCD README 文档 中 “Permissions delegation” 小节的介绍，设置这两个 USB 端口的访问权限。
4. 注销并重新登录 Linux 系统，然后重新插拔板子的电源使之前的改动生效。在终端再次输入 `ls -l /dev/ttyUSB*` 命令进行验证，查看这两个设备的组所有者是否已经从 `dialout` 更改为 `plugdev`:

```
user-name@computer-name:~/esp$ ls -l /dev/ttyUSB*
crw-rw-r-- 1 root plugdev 188, 0 Jul 10 19:07 /dev/ttyUSB0
crw-rw-r-- 1 root plugdev 188, 1 Jul 10 19:07 /dev/ttyUSB1
```

如果看到类似的输出结果，并且你也是 `plugdev` 组的成员，那么设置工作就完成了。
具有较低编号的 `/dev/ttyUSBn` 接口用于 JTAG 通信，另一路接口被连接到 ESP32 的串口（UART），用于上传应用程序映像给 ESP32 进行烧写。

现在，ESP-WROVER-KIT 的 JTAG 接口应该可以被 OpenOCD 使用了，想要进一步设置调试环境，请前往*运行 OpenOCD* 章节。

MacOS 在 macOS 上，同时使用 FT2232 的 JTAG 接口和串口还需另外进行其它操作。当操作系统加载 FTDI 串口驱动的时候，它会对 FT2232 芯片的两个通道做相同的操作。但是，这两个通道中只有一个是被用作串口，而另一个用于 JTAG，如果操作系统已经为用于 JTAG 的通道加载了 FTDI 串口驱动的话，OpenOCD 将无法连接到芯片。有两个方法可以解决这个问题：

1. 在启动 OpenOCD 之前手动卸载 FTDI 串口驱动程序，然后启动 OpenOCD，再加载串口驱动程序。
2. 修改 FTDI 驱动程序的配置，使其不会为 FT2232 芯片的通道 B 进行自我加载，该通道用于 ESP-WROVER-KIT 板上的 JTAG 通道。

手动卸载驱动程序

1. 从 FTDI 官网 安装驱动。
2. 使用 USB 线连接 ESP-WROVER-KIT。
3. 卸载串口驱动

```
sudo kextunload -b com.FTDI.driver.FTDIUSBSerialDriver
```

有时，您可能还需要卸载苹果的 FTDI 驱动:

```
sudo kextunload -b com.apple.driver.AppleUSBFTDI
```

4. 运行 OpenOCD:

```
.. include:: esp32.inc
    :start-after: run-openocd
    :end-before: ---
```

5. 在另一个终端窗口，再一次加载 FTDI 串口驱动:

```
sudo kextload -b com.FTDI.driver.FTDIUSBSerialDriver
```

注解： 如果你需要重启 OpenOCD，则无需再次卸载 FTDI 驱动程序，只需停止 OpenOCD 并再次启动它。只有在重新连接 ESP-WROVER-KIT 或者切换了电源的情况下才需要再次卸载驱动。

你也可以根据自身需求，将此过程包装进 shell 脚本中。

修改 FTDI 驱动 简而言之，这种方法需要修改 FTDI 驱动程序的配置文件，这样可以防止为 FT2232H 的通道 B 自动加载串口驱动。

注解： 其他板子可能将通道 A 用于 JTAG，因此请谨慎使用此选项。

警告： 此方法还需要操作系统禁止对驱动进行签名验证，因此可能无法被所有的用户所接受。

1. 使用文本编辑器打开 FTDI 驱动的配置文件（注意 sudo）：

```
sudo nano /Library/Extensions/FTDIUSBSerialDriver.kext/Contents/Info.plist
```

2. 找到并删除以下几行:

```
<key>FT2232H_B</key>
<dict>
    <key>CFBundleIdentifier</key>
    <string>com.FTDI.driver.FTDIUSBSerialDriver</string>
    <key>IOClass</key>
    <string>FTDIUSBSerialDriver</string>
    <key>IOProviderClass</key>
    <string>IOUSBInterface</string>
    <key>bConfigurationValue</key>
    <integer>1</integer>
    <key>bInterfaceNumber</key>
    <integer>1</integer>
    <key>bcdDevice</key>
    <integer>1792</integer>
    <key>idProduct</key>
    <integer>24592</integer>
    <key>idVendor</key>
    <integer>1027</integer>
</dict>
```

3. 保存并关闭文件
4. 禁用驱动的签名认证:
    1. 点击苹果的 logo，选择 “Restart…”
    2. 重启后当听到响铃时，立即按下键盘上的 CMD+R 组合键
    3. 进入恢复模式后，打开终端
    4. 运行命令:

```
csrutil enable --without kext
```

    5. 再一次重启系统

完成这些步骤后，可以同时使用串口和 JTAG 接口了。

想要进一步设置调试环境，请前往运行 *OpenOCD* 章节。

配置其它 JTAG 接口 关于适配 OpenOCD 和 ESP32 的 JTAG 接口选择问题，请参考选择 *JTAG* 适配器章节，确保 JTAG 适配器能够与 OpenOCD 和 ESP32 一同工作。然后按照以下三个步骤进行设置，使其正常工作。

配置硬件

1. 找到 JTAG 接口和 ESP32 板上需要相互连接并建立通信的引脚/信号。

表 23: ESP32 引脚和 JTAG 接口信号

ESP32 引脚	JTAG 信号
MTDO / GPIO15	TDO
MTDI / GPIO12	TDI
MTCK / GPIO13	TCK
MTMS / GPIO14	TMS
GND	GND

2. 检查 ESP32 上用于 JTAG 通信的的引脚是否被连接到了其它硬件上，这可能会影响 JTAG 的工作。
3. 连接 ESP32 和 JTAG 接口上的引脚/信号。

配置驱动 你可能还需要安装软件驱动，才能使 JTAG 在计算机上正常工作，请参阅你所使用的 JTAG 适配器的有关文档，获取相关详细信息。

连接 将 JTAG 接口连接到计算机，打开 ESP32 和 JTAG 接口板上的电源，然后检查计算机是否可以识别到 JTAG 接口。

要继续设置调试环境，请前往运行 *OpenOCD* 章节。

运行 OpenOCD

配置完目标并将其连接到电脑后，即可启动 OpenOCD。

打开终端，按照快速入门指南中的设置好开发环境 章节进行操作，然后运行如下命令，以启动 OpenOCD（该命令适用于 Windows、Linux 和 macOS）：

```
openocd -f board/esp32-wrover-kit-3.3v.cfg
```

注解: 上述命令中 `-f` 选项后跟的配置文件专用于板载 ESP32-WROOM-32 模组的 ESP-WROVER-KIT 开发板。基于具体使用的硬件，您可能需要选择不同的配置文件，具体内容请参阅根据目标芯片配置 *OpenOCD*。

现在您应该可以看到如下输出（此日志来自板载 ESP32-WROOM-32 模组的 ESP-WROVER-KIT 开发板）：

```
user-name@computer-name:~/esp/esp-idf$ openocd -f board/esp32-wrover-kit-3.3v.cfg
Open On-Chip Debugger  v0.10.0-esp32-20190708 (2019-07-08-11:04)
Licensed under GNU GPL v2
For bug reports, read
        http://openocd.org/doc/doxygen/bugs.html
none separate
adapter speed: 20000 kHz
force hard breakpoints
Info : ftdi: if you experience problems at higher adapter clocks, try the command
↪"ftdi_tdo_sample_edge falling"
Info : clock speed 20000 kHz
Info : JTAG tap: esp32.cpu0 tap/device found: 0x120034e5 (mfg: 0x272 (Tensilica),␣
↪part: 0x2003, ver: 0x1)
Info : JTAG tap: esp32.cpu1 tap/device found: 0x120034e5 (mfg: 0x272 (Tensilica),␣
↪part: 0x2003, ver: 0x1)
Info : esp32: Debug controller was reset (pwrstat=0x5F, after clear 0x0F).
Info : esp32: Core was reset (pwrstat=0x5F, after clear 0x0F).
```

- 如果出现指示权限问题的错误，请打开 `~/esp/openocd-esp32` 目录，参阅 OpenOCD README 文件中关于 “Permissions delegation” 的说明。
- 如果遇到无法找到配置文件的错误，例如 `Can't find board/esp32-wrover-kit-3.3v.cfg`，请检查 `OPENOCD_SCRIPTS` 环境变量是否设置正确，OpenOCD 根据此变量来查找 `-f` 指定的文件，详见安装 *OpenOCD*。此外，还需要检查配置文件是否确实位于该路径下。
- 如果出现 JTAG 错误（例如输出为 `...all ones` 或 `...all zeroes`），请检查硬件连接是否正确，除了 ESP32 的管脚之外是否还有其他信号连接到了 JTAG，并查看是否所有器件都已经上电。

上传待调试的应用程序

按照正常步骤构建并上传 ESP32 应用程序，具体请参阅第八步：编译工程 章节。

除此以外，您还可以使用 OpenOCD 通过 JTAG 接口将应用程序镜像烧写到闪存中，命令如下:

```
openocd -f board/esp32-wrover-kit-3.3v.cfg -c "program_esp filename.bin 0x10000␣
↪verify exit"
```

其中 OpenOCD 的烧写命令 `program_esp` 格式如下：

```
program_esp <image_file> <offset> [verify] [reset] [exit]
```

- `image_file` - 程序镜像文件存放的路径
- `offset` - 镜像烧写到闪存中的偏移地址
- `verify` - 烧写完成后校验闪存中的内容（可选）
- `reset` - 烧写完成后重启目标（可选）
- `exit` - 烧写完成后退出 OpenOCD（可选）

现在可以调试应用程序了，请按照以下章节中的步骤进行操作。

4.19.6 启动调试器

ESP32 的工具链中带有 GNU 调试器（简称 GDB），它和其它工具链软件共同存放于 xtensa-esp32-elf-gdb 中。除了直接在命令行终端中调用并操作 GDB 外，也可以在 IDE (例如 Eclipse、Visual Studio Code 等）中进行调用，使用图形用户界面间接操作 GDB，这一方法无需在终端中输入任何命令。

关于以上两种调试器的使用方法，详见以下链接。

- *在 Eclipse 中使用 GDB*
- *在命令行中使用 GDB*

建议首先检查调试器能否在命令行终端 下正常工作，然后再使用 Eclipse 集成开发环境 进行调试工作。

4.19.7 调试范例

本节适用于不熟悉 GDB 的用户，下文将使用 get-started/blink 下简单的应用程序来演示调试会话的工作流程，同时会介绍以下常用的调试操作：

1. 浏览代码，查看堆栈和线程
2. 设置和清除断点
3. 手动暂停目标
4. 单步执行代码
5. 查看并设置内存
6. 观察和设置程序变量
7. 设置条件断点

此外还会提供在命令行终端进行调试 下使用 GDB 调试的案例。

在演示之前，请完成 ESP32 目标板设置并加载 get-started/blink 至 ESP32 中。

4.19.8 从源码构建 OpenOCD

以下文档分别介绍了如何在各操作系统平台上从源码构建 OpenOCD。

Windows 环境下从源码编译 OpenOCD

除了从 Espressif 官方 直接下载 OpenOCD 可执行文件，你还可以选择从源码编译得到 OpenOCD。如果想要快速设置 OpenOCD 而不是自行编译，请备份好当前文件，前往*安装 OpenOCD* 章节查阅。

下载 OpenOCD 源码 支持 ESP32 的 OpenOCD 源代码可以从乐鑫官方的 GitHub 获得，网址为 https://github.com/espressif/openocd-esp32。请使用以下命令来下载源代码：

```
cd ~/esp
git clone --recursive https://github.com/espressif/openocd-esp32.git
```

克隆后的源代码被保存在 `~/esp/openocd-esp32` 目录中。

安装依赖的软件包 安装编译 OpenOCD 所需的软件包。

注解: 依次安装以下软件包，检查安装是否成功，然后继续下一个软件包的安装。在进行下一步操作之前，要先解决当前报告的问题。

```
pacman -S libtool
pacman -S autoconf
pacman -S automake
pacman -S texinfo
pacman -S mingw-w64-i686-libusb-compat-git
pacman -S pkg-config
```

注解: 安装 `pkg-config` 会破坏 esp-idf 的工具链，因而在 OpenOCD 构建完成后，应将其卸载。详见文末进一步说明。如果想要再次构建 OpenOCD，你需要再次运行 `pacman -S pkg-config`。此步骤安装的其他软件包（在 `pkg-config` 之前）并不会出现这一问题。

构建 OpenOCD 配置和构建 OpenOCD 的流程如下:

```
cd ~/esp/openocd-esp32
./bootstrap
./configure
make
```

你可以选择最后再执行 `sudo make install`，如果你已经安装过别的开发平台的 OpenOCD，请跳过这个步骤，因为它可能会覆盖掉原来的 OpenOCD。

注解:

- 如果发生错误，请解决后再次尝试编译，直到 `make` 成功为止。
- 如果 OpenOCD 存在子模块问题，请 `cd` 到 `openocd-esp32` 目录，并输入 `git submodule update --init` 命令。
- 如果 `./configure` 成功运行，JTAG 被使能的信息会被打印在 `OpenOCD configuration summary` 下面。
- 如果您的设备信息未显示在日志中，请根据 `../openocd-esp32/doc/INSTALL.txt` 文中的描述使用 `./configure` 启用它。
- 有关编译 OpenOCD 的详细信息，请参阅 `openocd-esp32/README.Windows`。

一旦 `make` 过程成功完成，OpenOCD 的可执行文件会被保存到 `~/esp/openocd-esp32/src/openocd` 目录中。

如安装依赖步骤所述，最后还需要移除 `pkg-config` 软件包:

```
pacman -Rs pkg-config
```

下一步 想要进一步配置调试环境，请前往*配置 ESP32 目标板* 章节。

Linux 环境下从源码编译 OpenOCD

除了从 Espressif 官方 直接下载 OpenOCD 可执行文件，你还可以选择从源码编译得到 OpenOCD。如果想要快速设置 OpenOCD 而不是自行编译，请备份好当前文件，前往*安装 OpenOCD* 章节查阅。

下载 OpenOCD 源码 支持 ESP32 的 OpenOCD 源代码可以从乐鑫官方的 GitHub 获得，网址为 https://github.com/espressif/openocd-esp32。请使用以下命令来下载源代码:

```
cd ~/esp
git clone --recursive https://github.com/espressif/openocd-esp32.git
```

克隆后的源代码被保存在 `~/esp/openocd-esp32` 目录中。

安装依赖的软件包 安装编译 OpenOCD 所需的软件包。

注解: 依次安装以下软件包，检查安装是否成功，然后继续下一个软件包的安装。在进行下一步操作之前，要先解决当前报告的问题。

```
sudo apt-get install make
sudo apt-get install libtool
sudo apt-get install pkg-config
sudo apt-get install autoconf
sudo apt-get install automake
sudo apt-get install texinfo
sudo apt-get install libusb-1.0
```

注解:

- pkg-config 应为 0.2.3 或以上的版本。
- autoconf 应为 2.6.4 或以上的版本。
- automake 应为 1.9 或以上的版本。
- 当使用 USB-Blaster，ASIX Presto，OpenJTAG 和 FT2232 作为适配器时，需要下载安装 libFTDI 和 FTD2XX 的驱动。
- 当使用 CMSIS-DAP 时，需要安装 HIDAPI。

构建 OpenOCD 配置和构建 OpenOCD 的流程如下:

```
cd ~/esp/openocd-esp32
./bootstrap
./configure
make
```

你可以选择最后再执行 `sudo make install`，如果你已经安装过别的开发平台的 OpenOCD，请跳过这个步骤，因为它可能会覆盖掉原来的 OpenOCD。

注解:

- 如果发生错误，请解决后再次尝试编译，直到 `make` 成功为止。
- 如果 OpenOCD 存在子模块问题，请 `cd` 到 `openocd-esp32` 目录，并输入 `git submodule update --init` 命令。
- 如果 `./configure` 成功运行，JTAG 被使能的信息会被打印在 `OpenOCD configuration summary` 下面。
- 如果您的设备信息未显示在日志中，请根据 `../openocd-esp32/doc/INSTALL.txt` 文中的描述使用 `./configure` 启用它。
- 有关编译 OpenOCD 的详细信息，请参阅 `openocd-esp32/README`。

一旦 `make` 过程成功结束，OpenOCD 的可执行文件会被保存到 `~/openocd-esp32/bin` 目录中。

下一步 想要进一步配置调试环境，请前往*配置 ESP32 目标板* 章节。

MacOS 环境下从源码编译 OpenOCD

除了从 Espressif 官方 直接下载 OpenOCD 可执行文件，你还可以选择从源码编译得到 OpenOCD。如果想要快速设置 OpenOCD 而不是自行编译，请备份好当前文件，前往*安装 OpenOCD* 章节查阅。

下载 OpenOCD 源码 支持 ESP32 的 OpenOCD 源代码可以从乐鑫官方的 GitHub 获得，网址为 https://github.com/espressif/openocd-esp32。请使用以下命令来下载源代码:

```
cd ~/esp
git clone --recursive https://github.com/espressif/openocd-esp32.git
```

克隆后的源代码被保存在 `~/esp/openocd-esp32` 目录中。

安装依赖的软件包 使用 Homebrew 安装编译 OpenOCD 所需的软件包:

```
brew install automake libtool libusb wget gcc@4.9 pkg-config
```

构建 OpenOCD 配置和构建 OpenOCD 的流程如下:

```
cd ~/esp/openocd-esp32
./bootstrap
./configure
make
```

你可以选择最后再执行 `sudo make install`，如果你已经安装过别的开发平台的 OpenOCD，请跳过这个步骤，因为它可能会覆盖掉原来的 OpenOCD。

注解:

- 如果发生错误，请解决后再次尝试编译，直到 `make` 成功为止。
- 如果 OpenOCD 存在子模块问题，请 `cd` 到 `openocd-esp32` 目录，并输入 `git submodule update --init` 命令。
- 如果 `./configure` 成功运行，JTAG 被使能的信息会被打印在 `OpenOCD configuration summary` 下面。
- 如果您的设备信息未显示在日志中，请根据 `../openocd-esp32/doc/INSTALL.txt` 文中的描述使用 `./configure` 启用它。
- 有关编译 OpenOCD 的详细信息，请参阅 `openocd-esp32/README.OSX`。

一旦 `make` 过程成功结束，OpenOCD 的可执行文件会被保存到 `~/esp/openocd-esp32/src/openocd` 目录中。

下一步 想要进一步配置调试环境，请前往*配置 ESP32 目标板* 章节。

本文档在演示中所使用的 OpenOCD 是预编译好的二进制发行版，在*安装 OpenOCD* 章节中有所介绍。

如果要使用本地从源代码编译的 OpenOCD 程序，需要将相应可执行文件的路径修改为 `src/openocd`，并设置 `OPENOCD_SCRIPTS` 环境变量，使得 OpenOCD 能够找到配置文件。Linux 和 macOS 用户可以执行:

```
cd ~/esp/openocd-esp32
export OPENOCD_SCRIPTS=$PWD/tcl
```

Windows 用户可以执行:

```
cd %USERPROFILE%\esp\openocd-esp32
set "OPENOCD_SCRIPTS=%CD%\tcl"
```

针对 Linux 和 macOS 用户，运行本地编译的 OpenOCD 的示例:

```
src/openocd -f board/esp32-wrover-kit-3.3v.cfg
```

Windows 用户的示例如下:

```
src\openocd -f board\esp32-wrover-kit-3.3v.cfg
```

4.19.9 注意事项和补充内容

本节列出了上文中提到的所有注意事项和补充内容的链接。

注意事项和补充内容

本节提供了本指南中各部分提到的一些注意事项和补充内容。

可用的断点和观察点 ESP32 调试器支持 2 个硬件断点和 64 个软件断点。硬件断点是由 ESP32 芯片内部的逻辑电路实现的，能够设置在代码的任何位置：闪存或者 IRAM 的代码区域。除此以外，OpenOCD 实现了两种软件断点：闪存断点（最多 32 个）和 IRAM 断点（最多 32 个）。目前 GDB 无法在闪存中设置软件断点，因此除非解决此限制，否则这些断点只能由 OpenOCD 模拟为硬件断点。（详细信息可以参阅下面）。ESP32 还支持 2 个观察点，所以可以观察两个变量的变化或者通过 GDB 命令 `watch myVariable` 来读取变量的值。请注意 menuconfig 中的*CONFIG_FREERTOS_WATCHPOINT_END_OF_STACK* 选项会使用第二个观察点，如果你想在 OpenOCD 或者 GDB 中再次尝试使用这个观察点，可能不会得到预期的结果。详情请查看 menuconfig 中的帮助文档。

关于断点的补充知识 使用软件闪存模拟部分硬件断点的意思就是当使用 GDB 命令 `hb myFunction` 给某个函数设置硬件断点时，如果该函数位于闪存中，并且此时还有可用的硬件断点，那调试器就会使用硬件断点，否则就使用 32 个软件闪存断点中的一个来模拟。这个规则同样适用于 `b myFunction` 之类的命令，在这种情况下，GDB 会自己决定该使用哪种类型的断点。如果 `myFunction` 位于可写区域（IRAM），那就会使用软件 IRAM 断点，否则就会像处理 `hb` 命令一样使用硬件断点或者软件闪存断点。

闪存映射 vs 软件闪存断点 为了在闪存中设置或者清除软件断点，OpenOCD 需要知道它们在闪存中的地址。为了完成从 ESP32 的地址空间到闪存地址的转换，OpenOCD 使用闪存中程序代码区域的映射。这些映射被保存在程序映像的头部，位于二进制数据（代码段和数据段）之前，并且特定于写入闪存的每一个应用程序的映像。因此，为了支持软件闪存断点，OpenOCD 需要知道待调试的应用程序映像在闪存中的位置。默认情况下，OpenOCD 会在 0x8000 处读取分区表并使用第一个找到的应用程序映像的映射，但是也可能会存在无法工作的情况，比如分区表不在标准的闪存位置，甚至可能有多个映像：一个出厂映像和两个 OTA 映像，你可能想要调试其中的任意一个。为了涵盖所有可能的调试情况，OpenOCD 支持特殊的命令，用于指定待调试的应用程序映像在闪存中的具体位置。该命令具有以下格式：

```
esp appimage_offset <offset>
```

偏移量应为十六进制格式，如果要恢复默认行为，可以将偏移地址设置为 `-1` 。

注解： 由于 GDB 在连接 OpenOCD 时仅仅请求一次内存映射，所以可以在 TCL 配置文件中指定该命令，或者通过命令行传递给 OpenOCD。对于后者，命令行示例如下：

```
openocd -f board/esp32-wrover-kit-3.3v.cfg -c "init; halt; esp appimage_offset␣
↪0x210000"
```

另外还可以通过 OpenOCD 的 telnet 会话执行该命令，然后再连接 GDB，不过这种方式似乎没有那么便捷。

“next” 命令无法跳过子程序的原因 当使用 `next` 命令单步执行代码时，GDB 会在子程序的前面设置一个断点（两个中可用的一个），这样就可以跳过进入子程序内部的细节。如果这两个断点已经用在代码的其它位置，那么 `next` 命令将不起作用。在这种情况下，请删掉一个断点以使其中一个变得可用。当两个断点都已经被使用时，`next` 命令会像 `step` 命令一样工作，调试器就会进入子程序内部。

OpenOCD 支持的编译时的选项 ESP-IDF 有一些针对 OpenOCD 调试功能的选项可以在编译时进行设置：

- *CONFIG_ESP32_DEBUG_OCDAWARE* 默认会被使能。如果程序抛出了不可修复或者未处理的异常，并且此时已经连接上了 JTAG 调试器（即 OpenOCD 正在运行），那么 ESP-IDF 将会进入调试器工作模式。
- *CONFIG_FREERTOS_WATCHPOINT_END_OF_STACK* 默认没有使能。在所有任务堆栈的末尾设置观察点，从 1 号开始索引。这是调试任务堆栈溢出的最准确的方式。

更多有关设置编译时的选项的信息，请参阅项目配置菜单。

支持 FreeRTOS OpenOCD 完全支持 ESP-IDF 自带的 FreeRTOS 操作系统，GDB 会将 FreeRTOS 中的任务当做线程。使用 GDB 命令 `i threads` 可以查看所有的线程，使用命令 `thread n` 可以切换到某个具体任务的堆栈，其中 `n` 是线程的编号。检测 FreeRTOS 的功能可以在配置目标时被禁用。更多详细信息，请参阅根据目标芯片配置 *OpenOCD*.

在 OpenOCD 的配置文件中设置 SPI 闪存的工作电压 ESP32 的 MTDI 引脚是用于 JTAG 通信的四个引脚之一，同时也是 ESP32 的 bootstrapping 引脚。上电时，ESP32 会在 MTDI 引脚上采样二进制电平，据此来设置内部的稳压器，用于给外部的 SPI 闪存芯片供电。如果上电时 MTDI 引脚上的二进制电平为低电平，则稳压器会被设置为 3.3 V；如果 MTDI 引脚为高电平，则稳压器会被设置为 1.8 V。MTDI 引脚通常需要一个上拉电阻或者直接使能内部的弱下拉电阻（详见 ESP32 系列芯片技术规格书），具体取决于所使用的 SPI 芯片的类型。但是一旦连接上 JTAG 后，原来用于实现 bootstrapping 功能的上拉或者下拉电阻都会被覆盖掉。

为了解决这个问题，OpenOCD 的板级配置文件（例如 ESP-WROVER-KIT 开发板的 `board\esp32-wrover-kit-3.3v.cfg`）提供了 `ESP32_FLASH_VOLTAGE` 参数来设置 `TDO` 信号线在空闲状态下的二进制电平，这样就可以减少由于闪存电压不正确而导致的应用程序启动不良的几率。

查看 JTAG 连接的 ESP32 模组的规格书，检查其 SPI 闪存芯片的供电电压值，然后再相应的设置 `ESP32_FLASH_VOLTAGE`。大多数 WROOM 模块使用 3.3 V 的闪存芯片。早于 ESP32-WROVER-B 的 WROVER 模块使用 1.8 V 闪存芯片，而 ESP32-WROVER-B 和-E 模块使用 3.3 V 闪存芯片。

优化 JTAG 的速度 为了实现更高的数据通信速率同时最小化丢包数，建议优化 JTAG 时钟频率的设置，使其达到 JTAG 能稳定运行的最大值。为此，请参考以下建议。

1. 如果 CPU 以 80 MHz 运行，则 JTAG 时钟频率的上限为 20 MHz；如果 CPU 以 160 MHz 或者 240 MHz 运行，则上限为 26 MHz。
2. 根据特定的 JTAG 适配器和连接线缆的长度，你可能需要将 JTAG 的工作频率降低至 20 / 26 MHz 以下。
3. 在某些特殊情况下，如果你看到 DSR/DIR 错误（并且它并不是由 OpenOCD 试图从一个没有物理存储器映射的地址空间读取数据而导致的），请降低 JTAG 的工作频率。
4. ESP-WROVER-KIT 能够稳定运行在 20 / 26 MHz 频率下。

调试器的启动命令的含义 在启动时，调试器发出一系列命令来复位芯片并使其在特定的代码行停止运行。这个命令序列（如下所示）支持自定义，用户可以选择在最方便合适的代码行开始调试工作。

- `set remote hardware-watchpoint-limit 2` —限制 GDB 仅使用 ESP32 支持的两个硬件观察点。更多详细信息，请查阅 GDB 配置远程目标 。
- `mon reset halt` —复位芯片并使 CPU 停止运行。
- `flushregs` —monitor (`mon`) 命令无法通知 GDB 目标状态已经更改，GDB 会假设在 `mon reset halt` 之前所有的任务堆栈仍然有效。实际上，复位后目标状态将发生变化。执行 `flushregs` 是一种强制 GDB 从目标获取最新状态的方法。

- `thb app_main` —在 `app_main` 处插入一个临时的硬件断点，如果有需要，可以将其替换为其他函数名。
- `c` —恢复程序运行，它将会在 `app_main` 的断点处停止运行。

根据目标芯片配置 OpenOCD OpenOCD 有很多种配置文件（`*.cfg`），它们位于 OpenOCD 安装目录的 `share/openocd/scripts` 子目录中（或者在 OpenOCD 源码目录的 `tcl/scripts` 目录中）。本文主要介绍 `board`，`interface` 和 `target` 这三个目录。

- `interface` 包含了例如 ESPProg、J-Link 这些 JTAG 适配器的配置文件。
- `target` 包含了目标芯片或者模组的配置文件。
- `board` 包含有内置了 JTAG 适配器的开发板的配置文件，这些配置文件会根据实际的 JTAG 适配器和芯片/模组来导入某个具体的 `interface` 和 `target` 的配置。

ESP32 可以使用的配置文件如下表所示:

表 24: ESP32 相关的 OpenOCD 配置文件

名字	描述
`board/esp32-wrover-kit-3.3v.cfg`	板载 3.3V 模组（ESP32-WROOM-32, ESP32-WROVER-B, ESP32-WROVER-E）的 ESP-WROVER-KIT 开发板配置文件
`board/esp32-wrover-kit-1.8v.cfg`	板载 1.8V 模组（ESP32-WROVER）的 ESP-WROVER-KIT 开发板配置文件
`board/esp32-ethernet-kit-3.3v.cfg`	板载 3.3V 模组（ESP32-WROVER-B / ESP32-WROVER-E）的 ESP-Ethernet-KIT 开发板配置文件
`target/esp32.cfg`	ESP32 的目标配置文件，可以和某个 `interface/` 下的配置文件一同使用
`target/esp32-solo-1.cfg`	ESP32-SOLO-1 的目标配置文件，和 `esp32.cfg` 的差别在于它仅配置一个 CPU
`interface/ftdi/esp32_devkitj_v1.cfg`	适用于 ESP-WROVER-KIT 和 ESP-Prog 板子的 JTAG 适配器配置文件

如果你使用的开发板已经有了一份预定义好的配置文件，你只须将该文件通过 `-f` 参数告诉 OpenOCD。

如果你的开发板不在上述列表中，你需要使用多个 `-f` 参数来告诉 OpenOCD 你选择的 `interface` 和 `target` 配置文件。

自定义配置文件 OpenOCD 的配置文件是用 TCL 语言编写的，包含了定制和编写脚本的各种选项。这在非标准调试的场景中非常有用，更多关于 TCL 脚本的内容请参考 OpenOCD 参考手册。

OpenOCD 中的配置变量 你还可以视情况在导入 `target` 配置文件之前，设定如下变量的值。可以写在自定义配置文件中，或者通过命令行传递。

TCL 语言中为变量赋值的语法是:

```
set VARIABLE_NAME value
```

在命令行中为变量赋值请参考如下示例（请把.cfg 配置文件替换成你自己的开发板配置）：

```
openocd -c 'set VARIABLE_NAME value' -f board/esp-xxxxx-kit.cfg
```

请切记，一定要在导入配置文件之前设置这些变量，否则变量的值将不会生效。为多个变量赋值需要重复多次 `-c` 选项。

表 25: 通用的 ESP 相关的 OpenOCD 变量

变量名	描述
ESP_RTOS	设置成 none 可以关闭 OpenOCD 对 RTOS 的支持，这样的话，你将无法在 GDB 中查看到线程列表。这个功能在调试 FreeRTOS 本身的时候会很有用，可以单步调试调度器的代码。
ESP_FLASH_SIZE	设置成 0 可以关闭对 Flash 断点的支持。
ESP_SEMIHOST_BASEDI	设置 semihosting 在主机端的默认目录。

表 26: ESP32 相关的 OpenOCD 变量

名字	描述
ESP32_FLASH_VOLTAGE	如果 ESP32 模组集成的是 1.8 V 的 Flash，将该变量设置为 1.8，详情请参考*在 OpenOCD 的配置文件中设置 SPI 闪存的工作电压*
ESP32_ONLYCPU	对于多核芯片，将该值设置为 1 可以仅启用单核调试功能

复位 ESP32 通过在 GDB 中输入 mon reset 或者 mon reset halt 来复位板子。

不要将 JTAG 引脚用于其他功能 如果除了 ESP32 模组和 JTAG 适配器之外的其他硬件也连接到了 JTAG 引脚，那么 JTAG 的操作可能会受到干扰。ESP32 JTAG 使用以下引脚：

表 27: ESP32 引脚和 JTAG 接口信号

ESP32 引脚	JTAG 信号
MTDO / GPIO15	TDO
MTDI / GPIO12	TDI
MTCK / GPIO13	TCK
MTMS / GPIO14	TMS
GND	GND

如果用户应用程序更改了 JTAG 引脚的配置，JTAG 通信可能会失败。如果 OpenOCD 正确初始化（检测到两个 Tensilica 内核），但在程序运行期间失去了同步并报出大量 DTR/DIR 错误，则应用程序可能将 JTAG 引脚重新配置为其他功能或者用户忘记将 Vtar 连接到 JTAG 适配器。

下面是 GDB 在应用程序进入重新配置 MTDO/GPIO15 作为输入代码后报告的一系列错误摘录：

```
cpu0: xtensa_resume (line 431): DSR (FFFFFFFF) indicates target still busy!
cpu0: xtensa_resume (line 431): DSR (FFFFFFFF) indicates DIR instruction generated␣
↪an exception!
cpu0: xtensa_resume (line 431): DSR (FFFFFFFF) indicates DIR instruction generated␣
↪an overrun!
cpu1: xtensa_resume (line 431): DSR (FFFFFFFF) indicates target still busy!
cpu1: xtensa_resume (line 431): DSR (FFFFFFFF) indicates DIR instruction generated␣
↪an exception!
cpu1: xtensa_resume (line 431): DSR (FFFFFFFF) indicates DIR instruction generated␣
↪an overrun!
```

JTAG 与闪存加密和安全引导 默认情况下，开启了闪存加密和（或者）安全引导后，系统在首次启动时，引导程序会烧写 eFuse 的某个比特，从而将 JTAG 永久关闭。

Kconfig 配置项*CONFIG_SECURE_BOOT_ALLOW_JTAG* 可以改变这个默认行为，使得用户即使开启了安全引导或者闪存加密，仍会保留 JTAG 的功能。

然而，因为设置软件断点 的需要，OpenOCD 会尝试自动读写 Flash 中的内容，这会带来两个问题：

- 软件断点和闪存加密是不兼容的，目前 OpenOCD 尚不支持对 Flash 中的内容进行加密和解密。
- 如果开启了安全引导功能，设置软件断点会改变被签名的程序的摘要，从而使得签名失效。这也意味着，如果设置了软件断点，系统会在下次重启时的签名验证阶段失败，导致无法启动。

关闭 JTAG 的软件断点功能，可以在启动 OpenOCD 时在命令行额外加一项配置参数 `-c 'set ESP_FLASH_SIZE 0'`，请参考*OpenOCD 中的配置变量*。

注解： 同样地，当启用该选项，并且调试过程中打了软件断点，之后引导程序将无法校验通过应用程序的签名。

JTAG 和 ESP32-WROOM-32 AT 固件兼容性问题 ESP32-WROOM 系列模块预装了 AT 固件。该固件将 GPIO12 至 GPIO15 管脚配置为 SPI 从属接口，使得无法使用 JTAG。

要想使用 JTAG，需要编译新的固件，新的固件不能使用专门用于 JTAG 通信的管脚（GPIO12 至 GPIO15），然后将固件烧录到模组中。请参考*不要将 JTAG 引脚用于其他功能*。

报告 OpenOCD / GDB 的问题 如果你遇到 OpenOCD 或者 GDB 程序本身的问题，并且在网上没有找到可用的解决方案，请前往 https://github.com/espressif/openocd-esp32/issues 新建一个议题。

1. 请在问题报告中提供你使用的配置的详细信息：
   a. JTAG 适配器类型。
   b. 用于编译和加载正在调试的应用程序的 ESP-IDF 版本号。
   c. 用于调试的操作系统的详细信息。
   d. 操作系统是在本地计算机运行还是在虚拟机上运行？
2. 创建一个能够演示问题的简单示例工程，描述复现该问题的步骤。且这个调试示例不能受到 Wi-Fi 协议栈引入的非确定性行为的影响，因而再次遇到同样问题时，更容易复现。
3. 在启动命令中添加额外的参数来输出调试日志。
   OpenOCD 端：

   ```
   openocd -l openocd_log.txt -d3 -f board/esp32-wrover-kit-3.3v.cfg
   ```

   这种方式会将日志输出到文件，但是它会阻止调试信息打印在终端上。当有大量信息需要输出的时候（比如调试等级提高到 `-d3`）这是个不错的选择。如果你仍然希望在屏幕上看到调试日志，请改用以下命令：

   ```
   openocd -d3 -f board/esp32-wrover-kit-3.3v.cfg 2>&1 | tee openocd.log
   ```

   Debugger 端：

   ```
   xtensa-esp32-elf-gdb -ex "set remotelogfile gdb_log.txt" <all other options>
   ```

   也可以将命令 `remotelogfile gdb_log.txt` 添加到 `gdbinit` 文件中。
4. 请将 `openocd_log.txt` 和 `gdb_log.txt` 文件附在你的问题报告中。

4.19.10 相关文档

使用调试器

本节会在*Eclipse* 和*命令行* 中分别介绍配置和运行调试器的方法。我们建议你首先通过*命令行* 检查调试器是否正常工作，然后再转到使用*Eclipse* 平台。

在 Eclipse 中使用 GDB 标准的 Eclipse 安装流程默认安装调试功能，另外我们还可以使用插件来调试，比如“GDB Hardware Debugging”。这个插件用起来非常方便，本指南会详细介绍该插件的使用方法。

首先，通过打开 Eclipse 并转到“Help” > “Install New Software”来安装“GDB Hardware Debugging”插件。

安装完成后，按照以下步骤配置调试会话。请注意，一些配置参数是通用的，有些则针对特定项目。我们会通过配置“blink”示例项目的调试环境来进行展示，请先按照*使用 Eclipse IDE 编译和烧写* 文章介绍的方法将该示例项目添加到 Eclipse 的工作空间。示例项目 get-started/blink 的源代码可以在 ESP-IDF 仓库的 examples 目录下找到。

1. 在 Eclipse 中，进入 *Run* > *Debug Configuration*，会出现一个新的窗口。在窗口的左侧窗格中，双击“GDB Hardware Debugging”（或者选择“GDB Hardware Debugging”然后按下“New”按钮）来新建一个配置。
2. 在右边显示的表单中，“Name:”一栏中输入配置的名称，例如：“Blink checking”。
3. 在下面的“Main”选项卡中，点击“Project:”边上的“Browse”按钮，然后选择当前的“blink”项目。
4. 在下一行的“C/C++ Application:”中，点击“Browse”按钮，选择“blink.elf”文件。如果“blink.elf”文件不存在，那么很有可能该项目还没有编译，请参考使用 *Eclipse IDE* 编辑和烧写 指南中的介绍。
5. 最后，在“Build (if required) before launching”下面点击“Disable auto build”。
   上述步骤 1 - 5 的示例输入如下图所示。

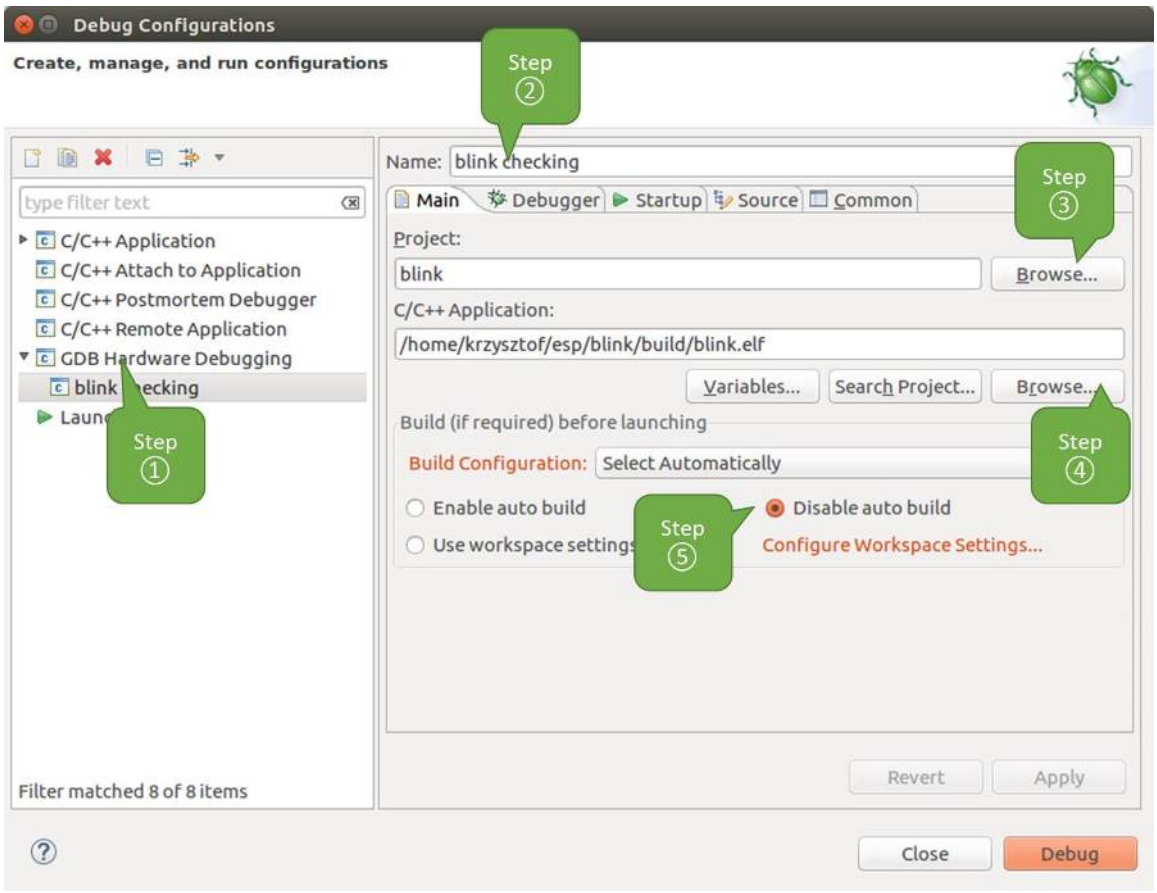

图 34: GDB 硬件调试的配置 - Main 选项卡

6. 点击“Debugger”选项卡，在“GDB Command”栏中输入 `xtensa-esp32-elf-gdb` 来调用调试器。
7. 更改“Remote host”的默认配置，在“Port number”下面输入 `3333`。
   上述步骤 6 - 7 的示例输入如下图所示。
8. 最后一个需要更改默认配置的选项卡是“Startup”选项卡。在“Initialization Commands”下，取消选中“Reset and Delay (seconds)”和“Halt”，然后在下面一栏中输入以下命令：

```
mon reset halt
flushregs
set remote hardware-watchpoint-limit 2
```

注解： 如果你想在启动新的调试会话之前自动更新闪存中的镜像，请在“Initialization Commands”文本框的开头添加以下命令行：

```
mon reset halt
mon program_esp ${workspace_loc:blink/build/blink.bin} 0x10000 verify
```

有关 `program_esp` 命令的说明请参考上传待调试的应用程序 章节。

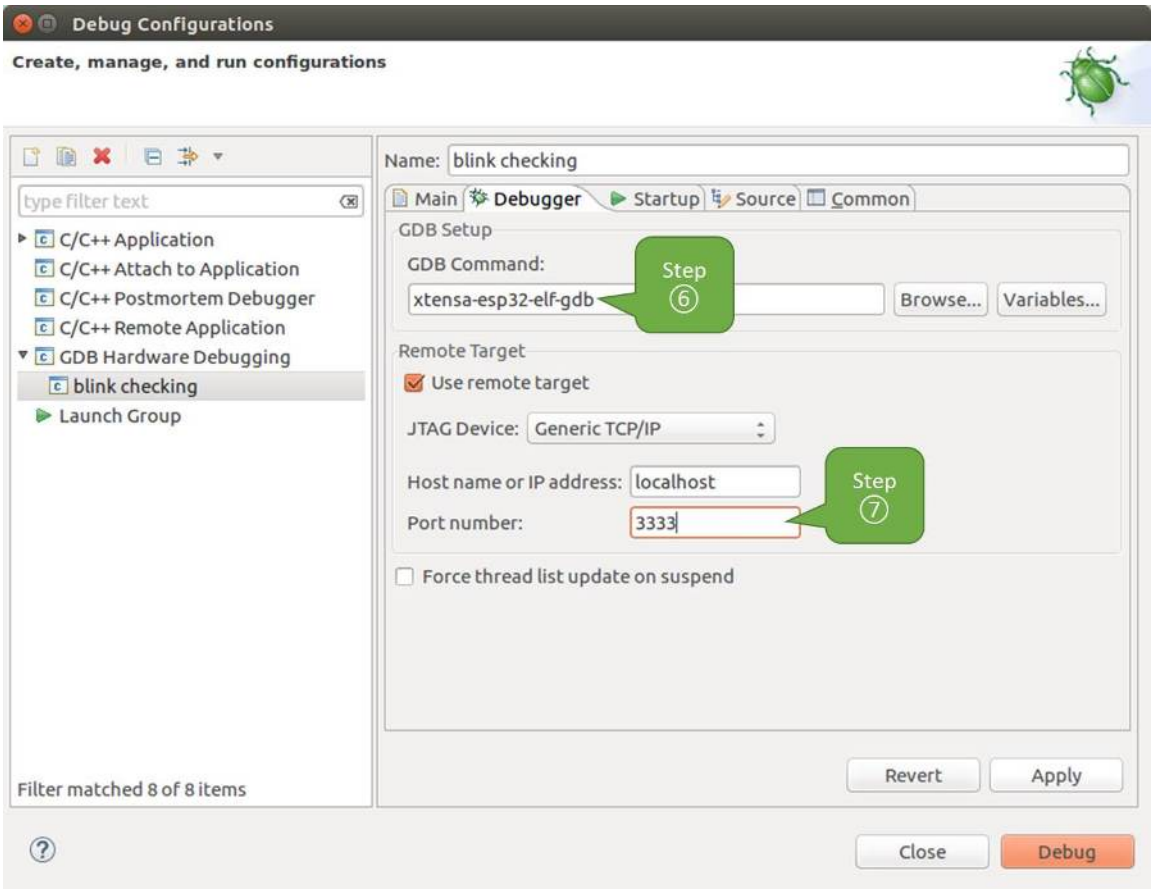

图 35: GDB 硬件调试的配置 - Debugger 选项卡

9. 在“Load Image and Symbols”下，取消选中“Load image”选项。
10. 在同一个选项卡中继续往下浏览，建立一个初始断点用来在调试器复位后暂停 CPU。插件会根据“Set break point at:”一栏中输入的函数名，在该函数的开头设置断点。选中这一选项，并在相应的字段中输入 `app_main`。
11. 选中“Resume”选项，这会使得程序在每次调用步骤 8 中的 `mon reset halt` 之后恢复，然后在 `app_main` 的断点处停止。
    上述步骤 8 - 11 的示例输入如下图所示。

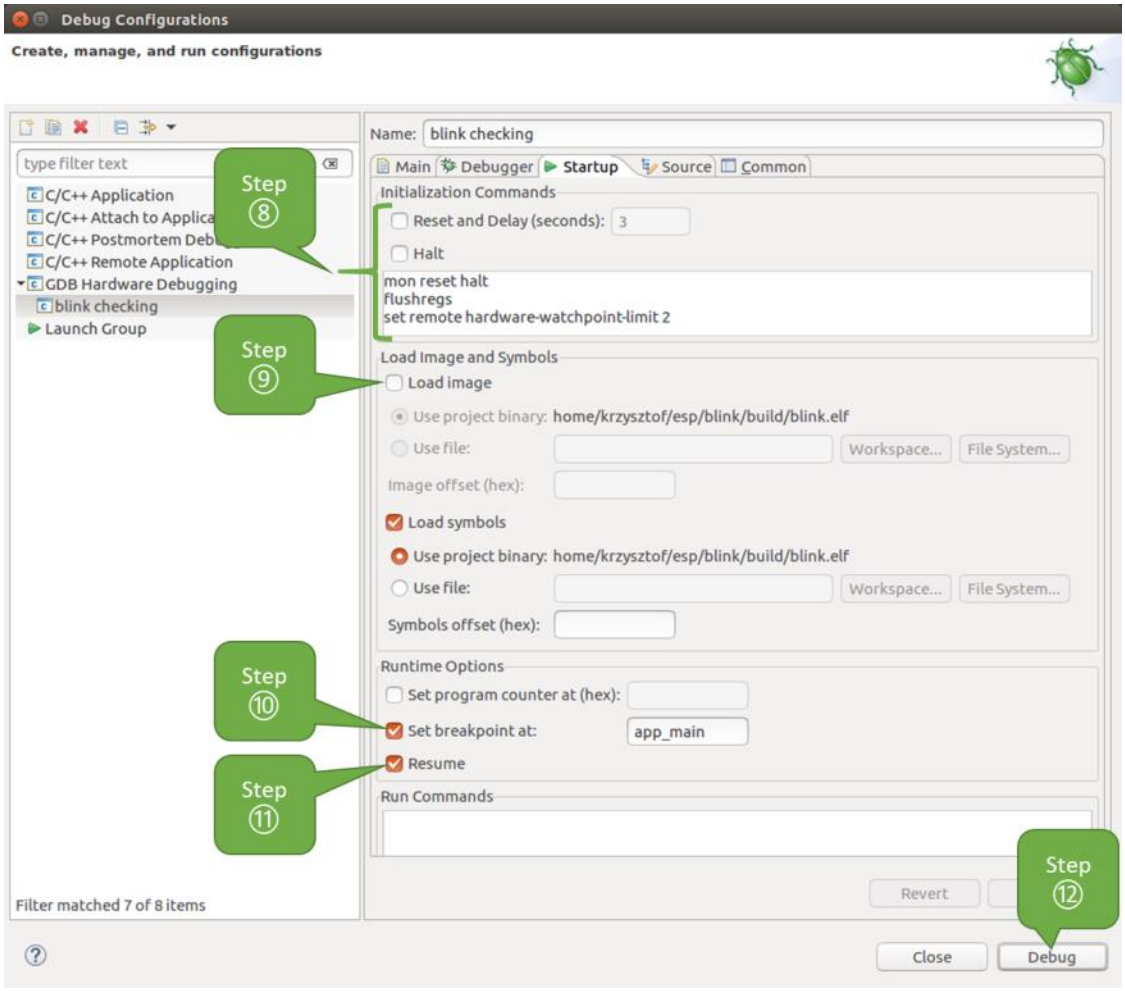

图 36: GDB 硬件调试的配置 - Startup 选项卡

上面的启动序列看起来有些复杂，如果你对其中的初始化命令不太熟悉，请查阅*调试器的启动命令的含义* 章节获取更多说明。

12. 如果你前面已经完成*配置 ESP32 目标板* 中介绍的步骤，那么目标正在运行并准备与调试器进行对话。按下“Debug”按钮就可以直接调试。否则请按下“Apply”按钮保存配置，返回*配置 ESP32 目标板* 章节进行配置，最后再回到这里开始调试。

一旦所有 1 - 12 的配置步骤都已经完成，Eclipse 就会打开“Debug”视图，如下图所示。

如果你不太了解 GDB 的常用方法，请查阅*使用 Eclipse 的调试示例* 文章中的调试示例章节*调试范例*。

在命令行中使用 GDB

1. 为了能够启动调试会话，需要先启动并运行目标，如果还没有完成，请按照*配置 ESP32 目标板* 中的介绍进行操作。
2. 打开一个新的终端会话并前往待调试的项目目录，比如：

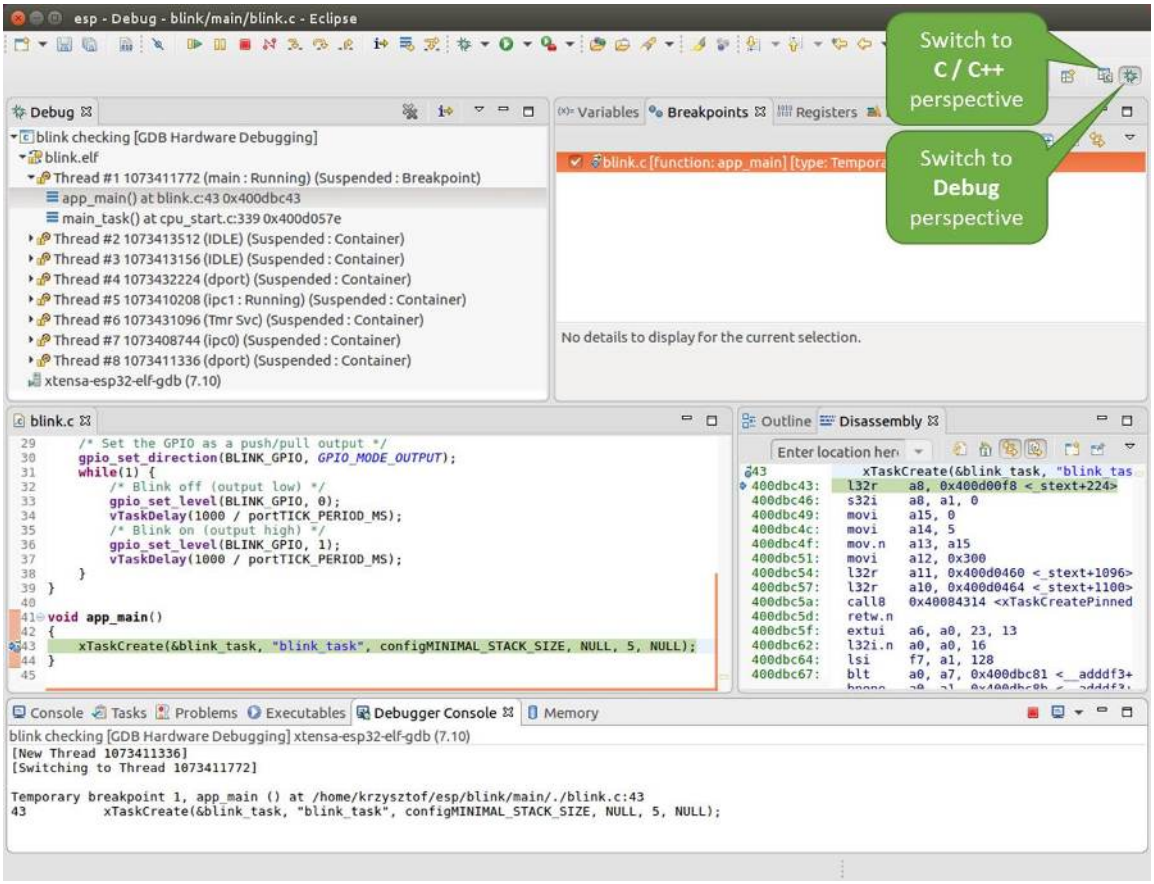

图 37: Eclipse 中的调试视图

```
cd ~/esp/blink
```

3. 当启动调试器时，通常需要提供几个配置参数和命令，为了避免每次都在命令行中逐行输入这些命令，我们可以新建一个配置文件，并将其命名为 gdbinit:

```
target remote :3333
set remote hardware-watchpoint-limit 2
mon reset halt
flushregs
thb app_main
c
```

将此文件保存在当前目录中。
有关 gdbinit 文件内部的更多详细信息，请参阅调试器的启动命令的含义 章节。

4. 准备好启动 GDB，请在终端中输入以下内容：

```
xtensa-esp32-elf-gdb -x gdbinit build/blink.elf
```

5. 如果前面的步骤已经正确完成，你会看到如下所示的输出日志，在日志的最后会出现 (gdb) 提示符：

```
user-name@computer-name:~/esp/blink$ xtensa-esp32-elf-gdb -x gdbinit build/
↪blink.elf
GNU gdb (crosstool-NG crosstool-ng-1.22.0-61-gab8375a) 7.10
Copyright (C) 2015 Free Software Foundation, Inc.
License GPLv3+: GNU GPL version 3 or later <http://gnu.org/licenses/gpl.html>
This is free software: you are free to change and redistribute it.
There is NO WARRANTY, to the extent permitted by law.  Type "show copying"
and "show warranty" for details.
This GDB was configured as "--host=x86_64-build_pc-linux-gnu --target=xtensa-
↪esp32-elf".
Type "show configuration" for configuration details.
For bug reporting instructions, please see:
<http://www.gnu.org/software/gdb/bugs/>.
Find the GDB manual and other documentation resources online at:
<http://www.gnu.org/software/gdb/documentation/>.
For help, type "help".
Type "apropos word" to search for commands related to "word"...
Reading symbols from build/blink.elf...done.
0x400d10d8 in esp_vApplicationIdleHook () at /home/user-name/esp/esp-idf/
↪components/esp32/./freertos_hooks.c:52
52          asm("waiti 0");
JTAG tap: esp32.cpu0 tap/device found: 0x120034e5 (mfg: 0x272 (Tensilica),␣
↪part: 0x2003, ver: 0x1)
JTAG tap: esp32.slave tap/device found: 0x120034e5 (mfg: 0x272 (Tensilica),␣
↪part: 0x2003, ver: 0x1)
esp32: Debug controller was reset (pwrstat=0x5F, after clear 0x0F).
esp32: Core was reset (pwrstat=0x5F, after clear 0x0F).
esp32 halted. PRO_CPU: PC=0x5000004B (active)    APP_CPU: PC=0x00000000
esp32: target state: halted
esp32: Core was reset (pwrstat=0x1F, after clear 0x0F).
Target halted. PRO_CPU: PC=0x40000400 (active)    APP_CPU: PC=0x40000400
esp32: target state: halted
Hardware assisted breakpoint 1 at 0x400db717: file /home/user-name/esp/blink/
↪main/./blink.c, line 43.
0x0:    0x00000000
Target halted. PRO_CPU: PC=0x400DB717 (active)    APP_CPU: PC=0x400D10D8
[New Thread 1073428656]
[New Thread 1073413708]
[New Thread 1073431316]
[New Thread 1073410672]
```

(下页继续)

(续上页)

```
[New Thread 1073408876]
[New Thread 1073432196]
[New Thread 1073411552]
[Switching to Thread 1073411996]

Temporary breakpoint 1, app_main () at /home/user-name/esp/blink/main/./blink.
↪c:43
43      xTaskCreate(&blink_task, "blink_task", 512, NULL, 5, NULL);
(gdb)
```

注意上面日志的倒数第三行显示了调试器已经在 `app_main()` 函数的断点处停止，该断点在 `gdbinit` 文件中设定。由于处理器已经暂停运行，LED 也不会闪烁。如果这也是你看到的现象，你可以开始调试了。

如果你不太了解 GDB 的常用方法，请查阅*使用命令行的调试示例* 文章中的调试示例章节*调试范例*。

使用 idf.py 进行调试 我们还可以使用 `idf.py` 更方便地执行上述提到的调试命令：

1. `idf.py openocd`
   在终端中运行 OpenOCD，其配置信息来源于环境变量或者命令行。默认会使用 `OPENOCD_SCRIPTS` 环境变量中指定的脚本路径，它是由 ESP-IDF 项目仓库中的导出脚本（`export.sh` or `export.bat`）添加到系统环境变量中的。当然，我们可以在命令行中通过 `--openocd-scripts` 来覆盖这个变量的值。
   你可以定义 `OPENOCD_COMMANDS` 环境变量来指定当前开发板的 JTAG 配置，或者通过 `--openocd-commands` 传递该参数。如果这两者都没有被定义，那么 OpenOCD 会使用 `-f board/esp32-wrover-kit-3.3v.cfg` 参数来启动。
2. `idf.py gdb`
   根据当前项目的 elf 文件自动生成 gdb 启动脚本，然后会按照*在命令行中使用 GDB* 中所描述的步骤启动 GDB。
3. `idf.py gdbtui`
   和步骤 2 相同，但是会在启动 GDB 的时候传递 `tui` 参数，这样可以方便在调试过程中查看源代码。
4. `idf.py gdbgui`
   启动 gdbgui，在浏览器中打开调试器的前端界面。
   上述这些命令也可以合并到一起使用，`idf.py` 会自动将后台进程（比如 openocd）最先运行，交互式进程（比图 gdb，monitor）最后运行。
   常用的组合命令如下所示：

   ```
   idf.py openocd gdbgui monitor
   ```

   上述命令会将 OpenOCD 运行至后台，然后启动 gdbgui 打开一个浏览器窗口，显示调试器的前端界面，最后在活动终端打开串口监视器。

调试示例

本节将介绍如何在*Eclipse* 和*命令行* 中使用 GDB 进行调试的示例。

使用 Eclipse 的调试示例 请检查目标板是否已经准备好，并加载了 get-started/blink 示例代码，然后按照*在 Eclipse 中使用 GDB* 中介绍的步骤配置和启动调试器，最后选择让应用程序在 `app_main()` 建立的断点处停止。

本小节的示例

1. *浏览代码，查看堆栈和线程*
2. *设置和清除断点*
3. *手动暂停目标*
4. *单步执行代码*
5. *查看并设置内存*

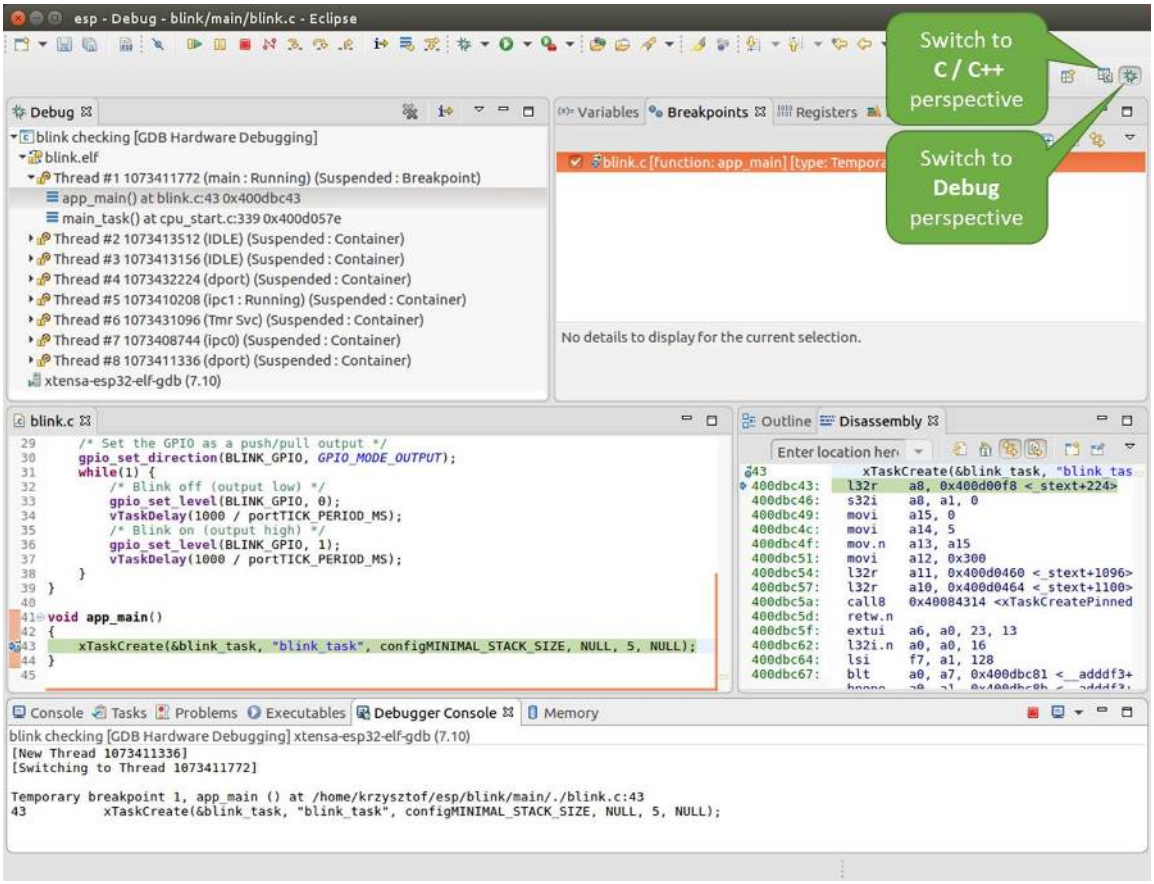

图 38: Eclipse 中的 Debug 视图

6. 观察和设置程序变量
7. 设置条件断点

浏览代码，查看堆栈和线程 当目标暂停时，调试器会在“Debug”窗口中显示线程的列表，程序暂停的代码行在下面的另一个窗口中被高亮显示，如下图所示。此时板子上的 LED 停止了闪烁。

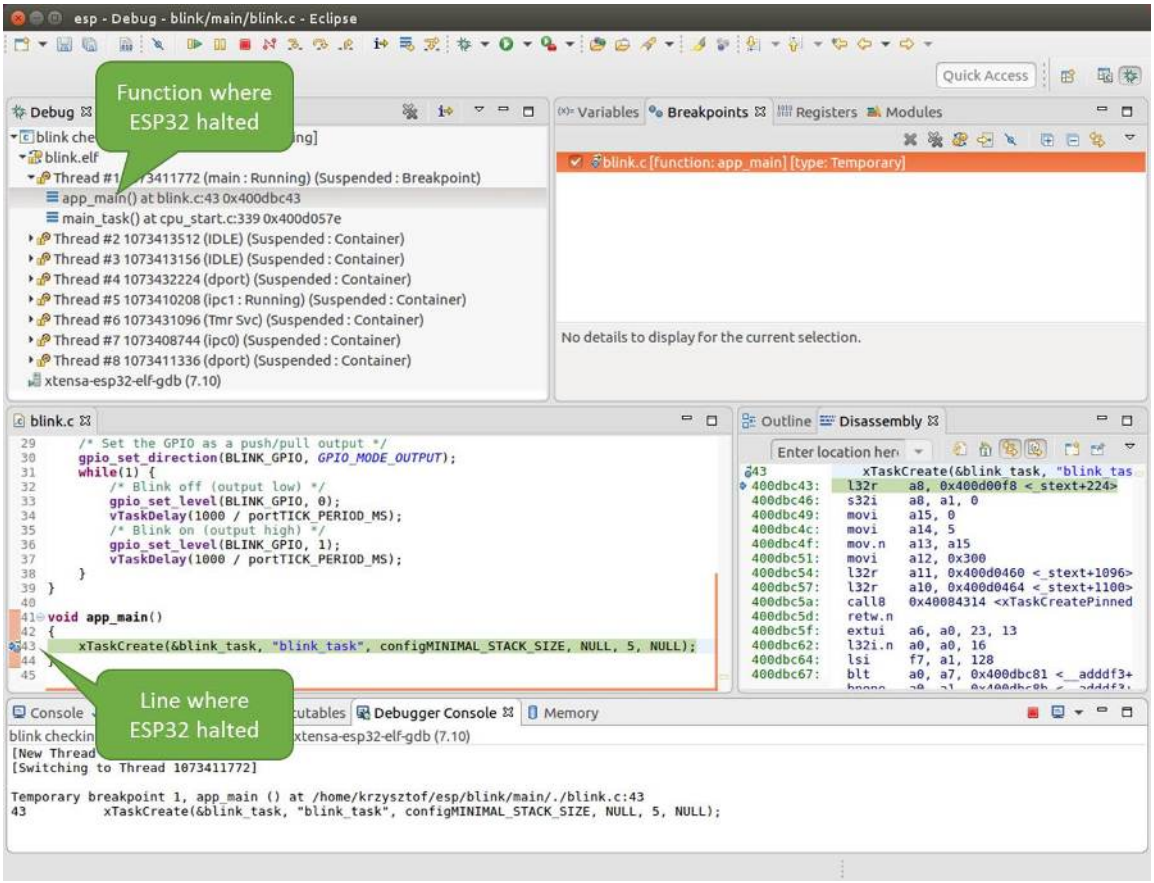

图 39: 调试时目标停止

暂停的程序所在线程也会被展开，显示函数调用的堆栈，它表示直到目标暂停所在代码行（下图高亮处）为止的相关函数的调用关系。1 号线程下函数调用堆栈的第一行包含了最后一个调用的函数 `app_main()`，根据下一行显示，它又是在函数 `main_task()` 中被调用的。堆栈的每一行还包含调用函数的文件名和行号。通过单击每个堆栈的条目，在下面的窗口中，你将看到此文件的内容。

通过展开线程，你可以浏览整个应用程序。展开 5 号线程，它包含了更长的函数调用堆栈，你可以看到函数调用旁边的数字，比如 `0x4000000c`，它们代表未以源码形式提供的二进制代码所在的内存地址。

无论项目是以源代码还是仅以二进制形式提供，在右边一个窗口中，都可以看到反汇编后的机器代码。

回到 1 号线程中的 `app_main()` 函数所在的 `blink.c` 源码文件，下面的示例将会以该文件为例介绍调试的常用功能。调试器可以轻松浏览整个应用程序的代码，这给单步调试代码和设置断点带来了很大的便利，下面将一一展开讨论。

设置和清除断点 在调试时，我们希望能够在关键的代码行停止应用程序，然后检查特定的变量、内存、寄存器和外设的状态。为此我们需要使用断点，以便在特定某行代码处快速访问和停止应用程序。

我们在控制 LED 状态发生变化的两处代码行分别设置一个断点。基于以上代码列表，这两处分别为第 33 和 36 代码行。按住键盘上的“Control”键，双击 blink.c 文件中的行号 33，并在弹出的对话框中点击“OK”按钮进行确定。如果你不想看到此对话框，双击行号即可。执行同样操作，在第 36 行设置另外一个断点。

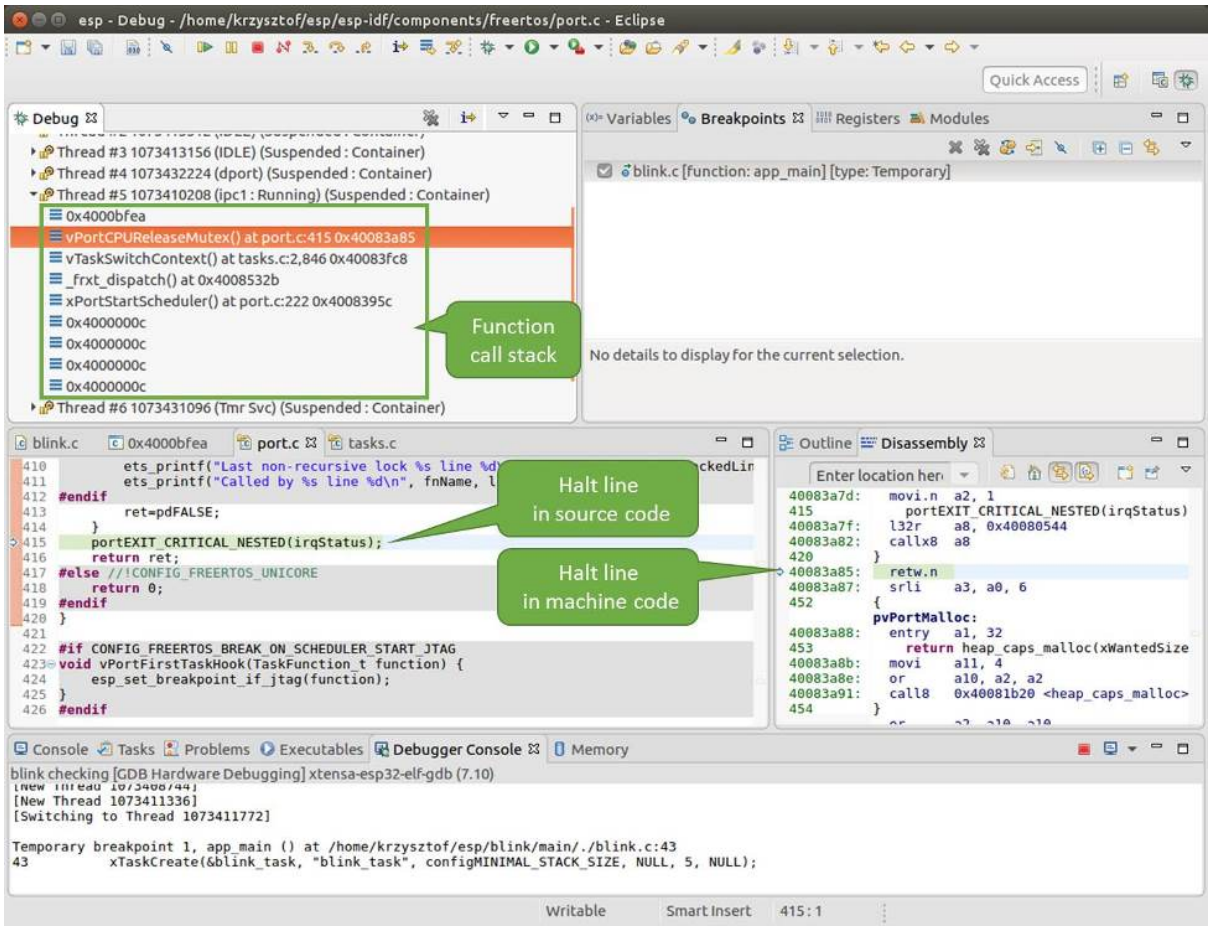

图 40: 浏览函数调用堆栈

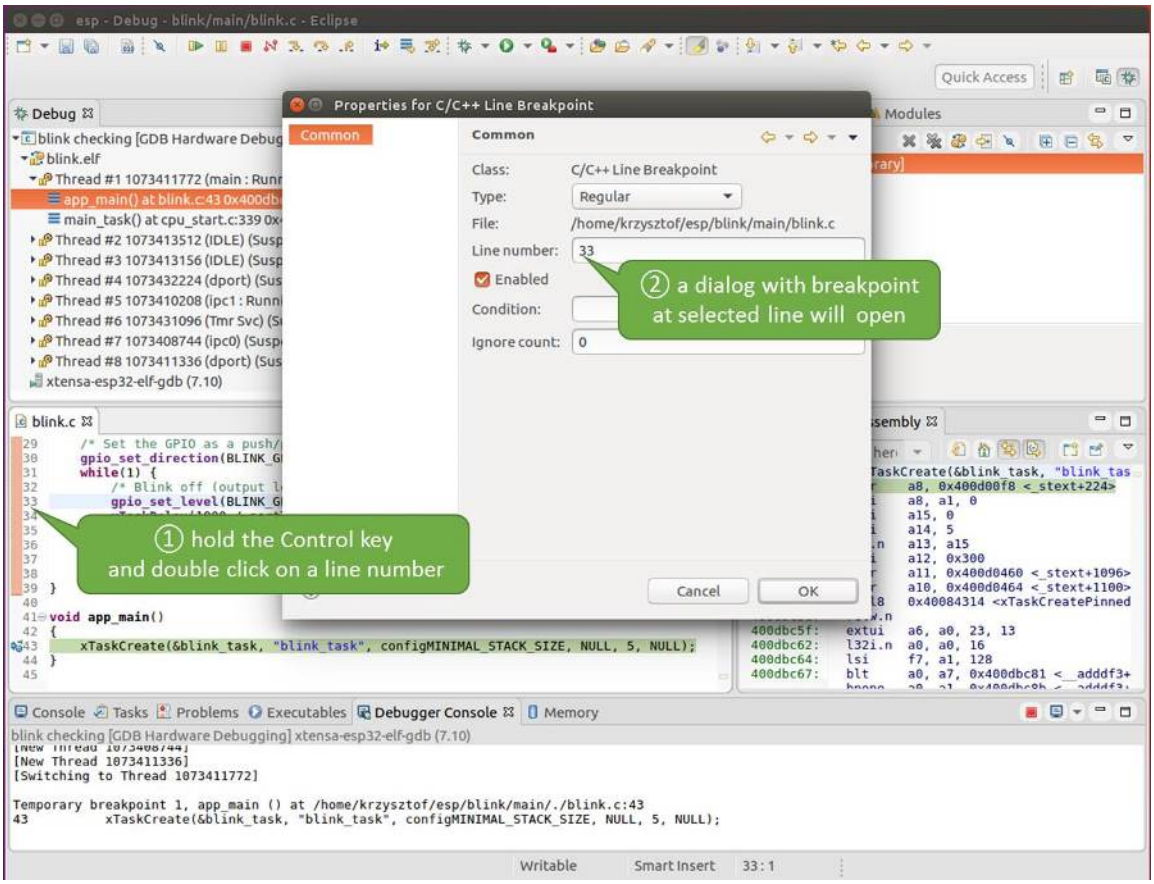
esp - Debug - blink/main/blink.c - Eclipse
Quick Access
Debug
blink checking [GDB Hardware Debug
blink.elf
Thread #1 1073411772 (main : Runn
app_main() at blink.c:43 0x400db
main_task() at cpu_start.c:339 0x
Thread #2 1073413512 (IDLE) (Susp
Thread #3 1073413156 (IDLE) (Susp
Thread #4 1073432224 (dport) (Sus
Thread #5 1073410208 (ipc1 : Runn
Thread #6 1073431096 (Tmr Svc) (S
Thread #7 1073408744 (ipc0) (Susp
Thread #8 1073411336 (dport) (Sus
xtensa-esp32-elf-gdb (7.10)
Properties for C/C++ Line Breakpoint
Common
Common
Class: C/C++ Line Breakpoint
Type: Regular
File: /home/krzysztof/esp/blink/main/blink.c
Line number: 33
Enabled
Condition:
Ignore count: 0
② a dialog with breakpoint at selected line will open
① hold the Control key and double click on a line number
Cancel
OK
Modules
blink.c
/* Set the GPIO as a push/
gpio_set_direction(BLINK_G
while(1) {
/* Blink off (output l
gpio_set_level(BLINK_G
}
void app_main()
{
xTaskCreate(&blink_task, "blink_task", configMINIMAL_STACK_SIZE, NULL, 5, NULL);
}
Console Tasks Problems Executables Debugger Console Memory
blink checking [GDB Hardware Debugging] xtensa-esp32-elf-gdb (7.10)
[New Thread 1073411336]
[Switching to Thread 1073411772]
Temporary breakpoint 1, app_main () at /home/krzysztof/esp/blink/main/./blink.c:43
43 xTaskCreate(&blink_task, "blink_task", configMINIMAL_STACK_SIZE, NULL, 5, NULL);
Writable
Smart Insert
33 : 1

图 41: 设置断点

断点的数量和位置信息会显示在右上角的“断点”窗口中。单击“Show Breakpoints Supported by Selected Target”图标可以刷新此列表。除了刚才设置的两个断点外，列表中可能还包含在调试器启动时设置在 `app_main()` 函数处的临时断点。由于最多只允许设置两个断点（详细信息请参阅可用的断点和观察点），你需要将其删除，否则调试会失败。

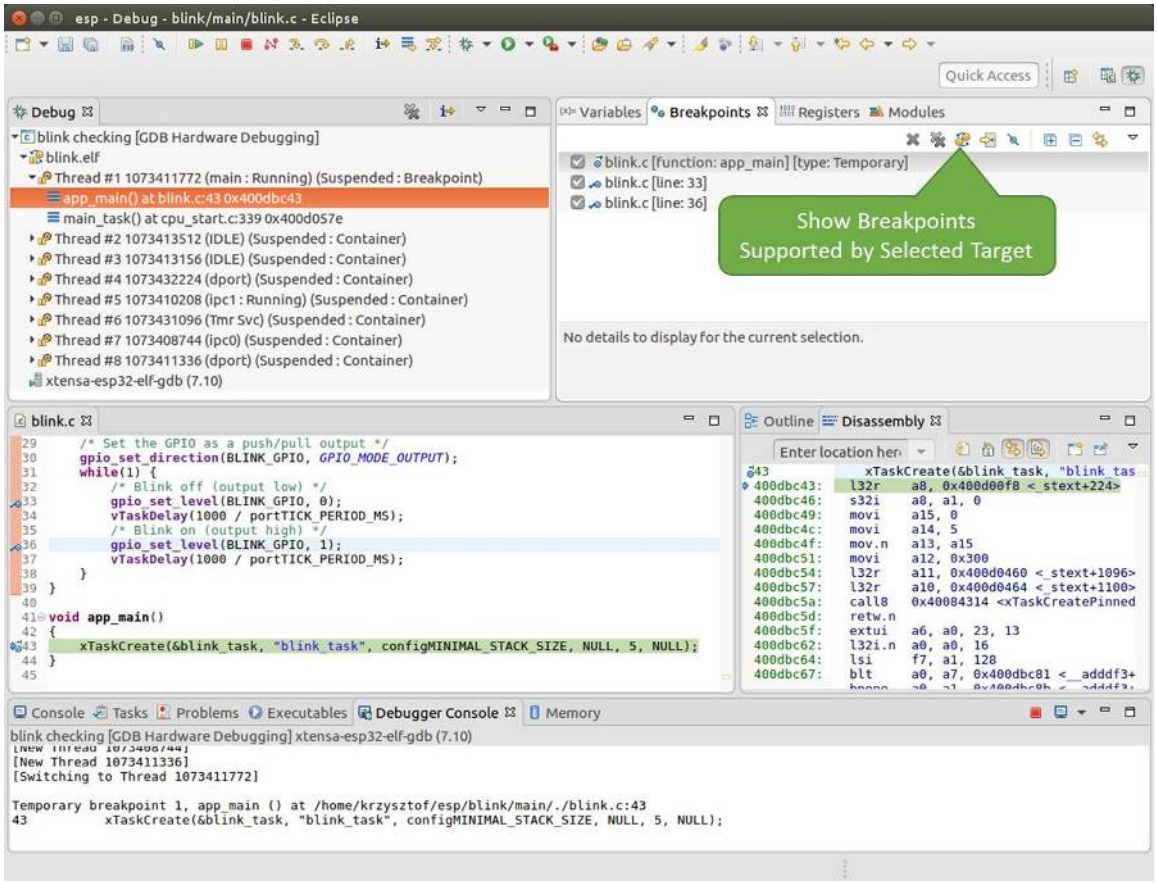

图 42: 设置了三个断点 / 最多允许两个断点

单击“Resume”（如果“Resume”按钮是灰色的，请先单击 8 号线程的 `blink_task()` 函数）后处理器将开始继续运行，并在断点处停止。再一次单击“Resume”按钮，使程序再次运行，然后停在第二个断点处，依次类推。

每次单击“Resume”按钮恢复程序运行后，都会看到 LED 切换状态。

更多关于断点的信息，请参阅可用的断点和观察点 和关于断点的补充知识。

手动暂停目标 在调试时，你可以恢复程序运行并输入代码等待某个事件发生或者保持无限循环而不设置任何断点。后者，如果想要返回调试模式，可以通过单击“Suspend”按钮来手动中断程序的运行。

在此之前，请删除所有的断点，然后单击“Resume”按钮。接着单击“Suspend”按钮，应用程序会停止在某个随机的位置，此时 LED 也将停止闪烁。调试器将展开线程并高亮显示停止的代码行。

在上图所示的情况中，应用程序已经在 `freertos_hooks.c` 文件的第 52 行暂停运行，现在你可以通过单击“Resume”按钮再次将其恢复运行或者进行下面要介绍的调试工作。

单步执行代码 我们还可以使用“Step Into (F5)”和“Step Over (F6)”命令单步执行代码，这两者之间的区别是执行“Step Into (F5)”命令会进入调用的子程序，而执行“Step Over (F6)”命令则会直接将子程序看成单个源码行，单步就能将其运行结束。

在继续演示此功能之前，请参照上文所述确保目前只在 `blink.c` 文件的第 36 行设置了一个断点。

按下 F8 键让程序继续运行然后在断点处停止运行，多次按下“Step Over (F6)”按钮，观察调试器是如何单步执行一行代码的。

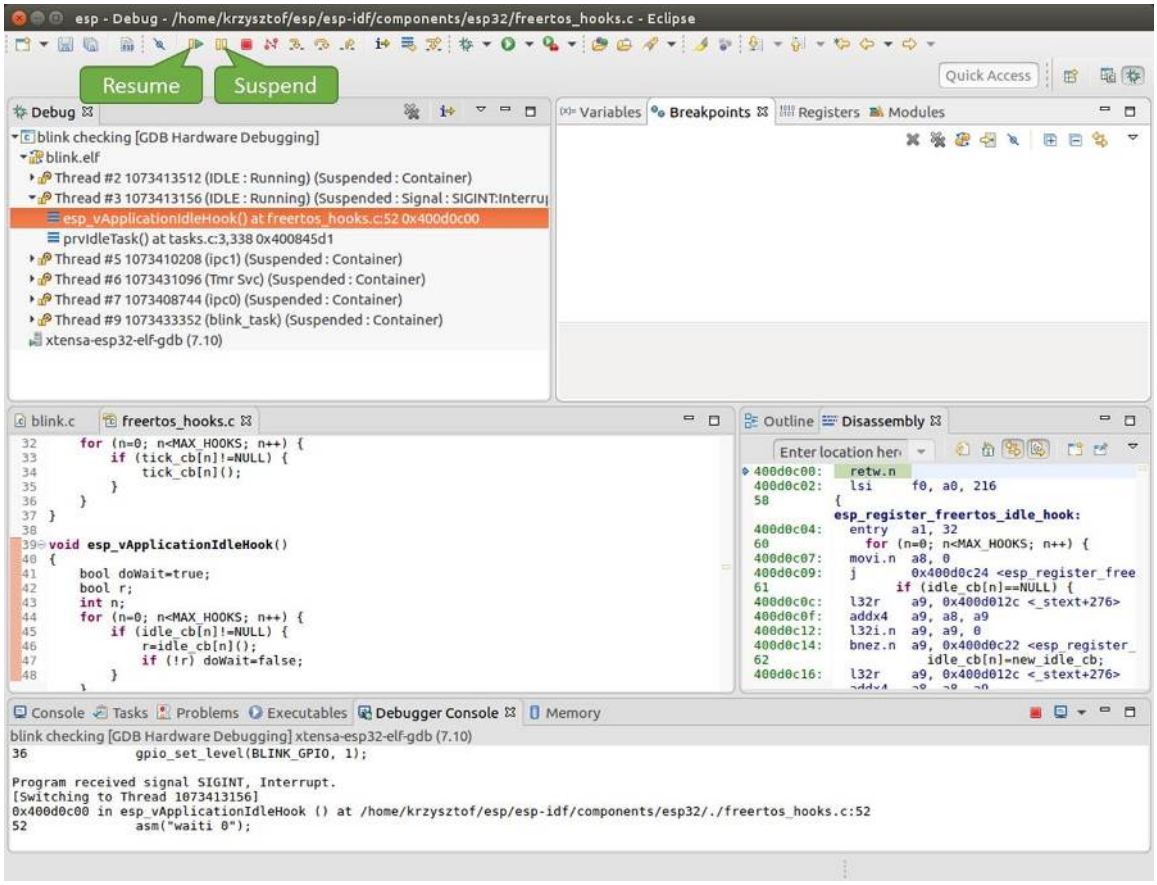
esp - Debug - /home/krzysztof/esp/esp-idf/components/esp32/freertos_hooks.c - Eclipse
Resume
Suspend
Quick Access
Debug
blink checking [GDB Hardware Debugging]
blink.elf
Thread #2 1073413512 (IDLE : Running) (Suspended : Container)
Thread #3 1073413156 (IDLE : Running) (Suspended : Signal : SIGINT:Interru
esp_vApplicationIdleHook() at freertos_hooks.c:52 0x400d0c00
prvIdleTask() at tasks.c:3,338 0x400845d1
Thread #5 1073410208 (ipc1) (Suspended : Container)
Thread #6 1073431096 (Tmr Svc) (Suspended : Container)
Thread #7 1073408744 (ipc0) (Suspended : Container)
Thread #9 1073433352 (blink_task) (Suspended : Container)
xtensa-esp32-elf-gdb (7.10)
Variables
Breakpoints
Registers
Modules
blink.c
freertos_hooks.c
Outline
Disassembly
Console
Tasks
Problems
Executables
Debugger Console
Memory
blink checking [GDB Hardware Debugging] xtensa-esp32-elf-gdb (7.10)
gpio_set_level(BLINK_GPIO, 1);
Program received signal SIGINT, Interrupt.
[Switching to Thread 1073413156]
0x400d0c00 in esp_vApplicationIdleHook () at /home/krzysztof/esp/esp-idf/components/esp32/./freertos_hooks.c:52
asm("waiti 0");

图 43: 手动暂停目标

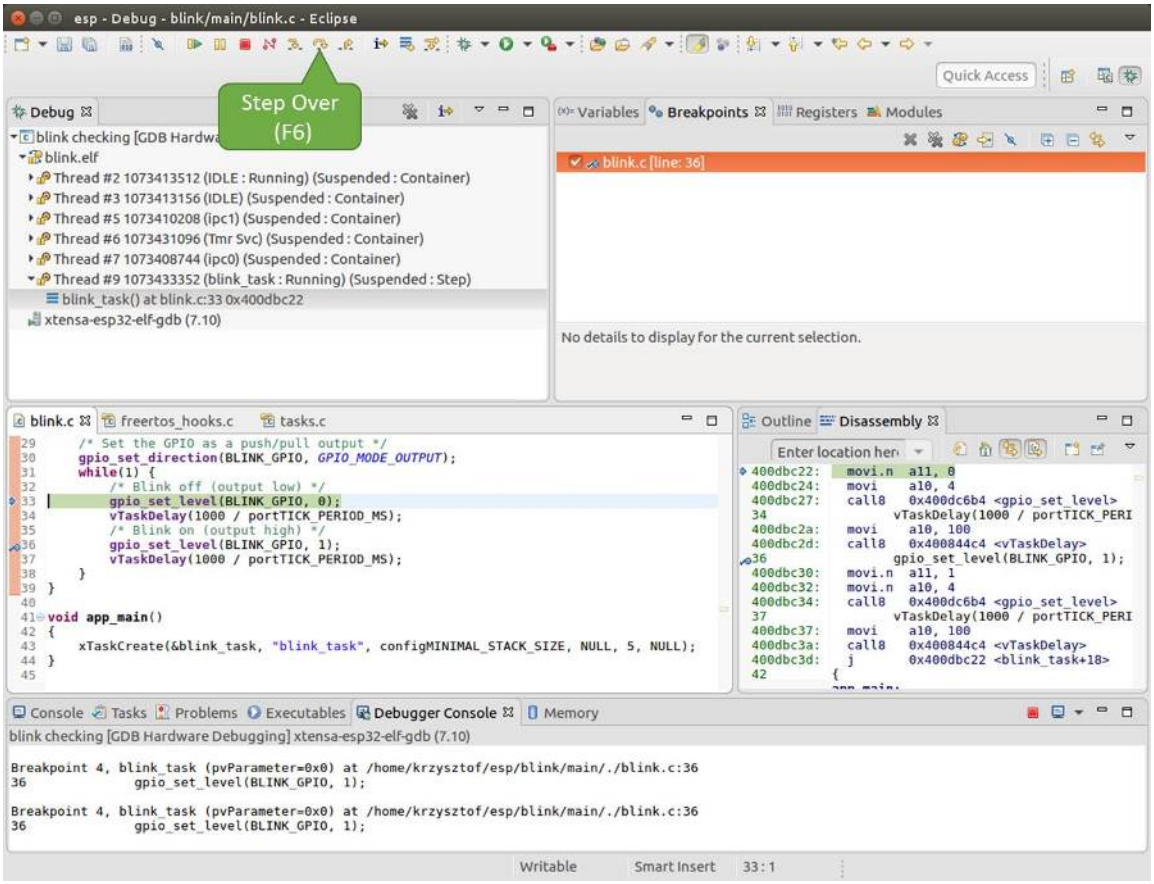

图 44: 使用“Step Over (F6)”单步执行代码

如果你改用“Step Into (F5)”，那么调试器将会进入调用的子程序内部。

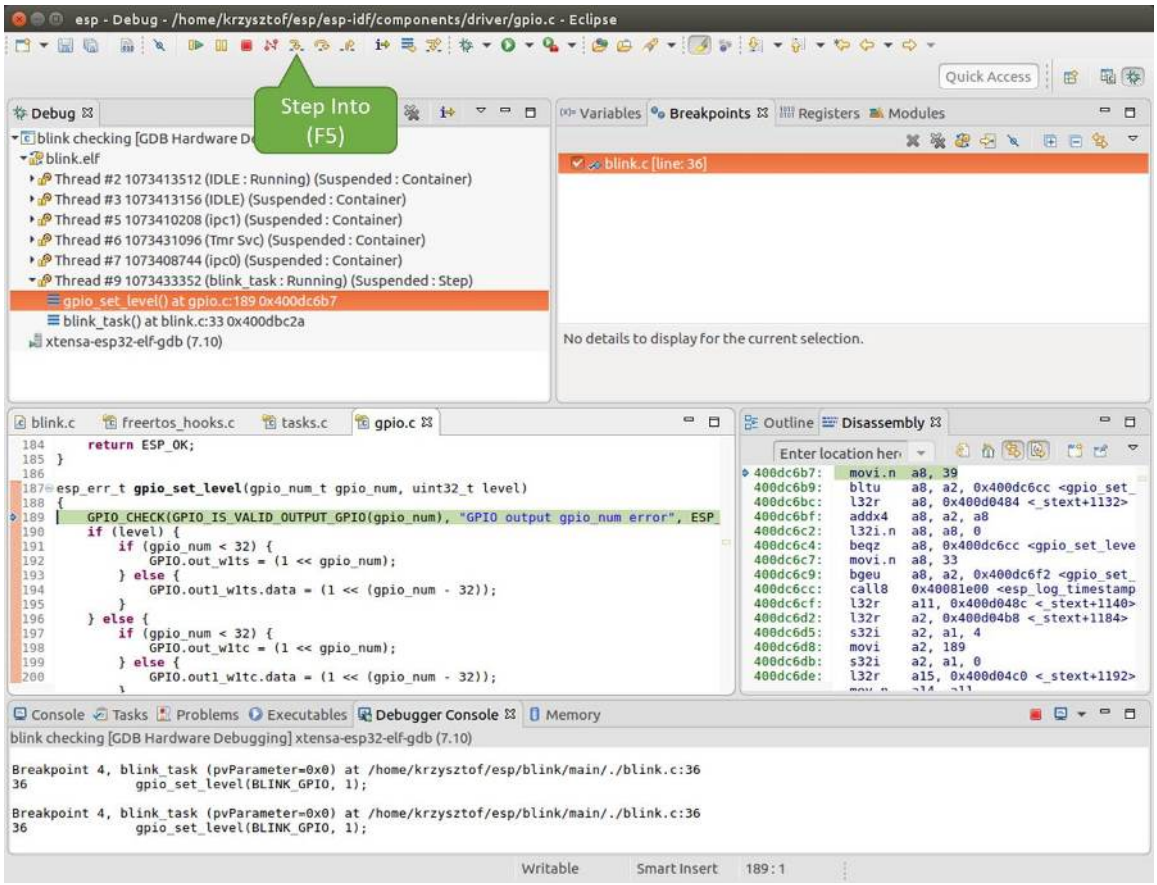

图 45: 使用“Step Into (F5)”单步执行代码

在上述例子中，调试器进入 `gpio_set_level(BLINK_GPIO, 0)` 代码内部，同时代码窗口快速切换到 `gpio.c` 驱动文件。

请参阅 *“next”命令无法跳过子程序的原因* 文档以了解 `next` 命令的潜在局限。

查看并设置内存 要显示或者设置内存的内容，请使用“调试”视图中位于底部的“Memory”选项卡。

在“Memory”选项卡下，我们将在内存地址 `0x3FF44004` 处读取和写入内容。该地址也是 `GPIO_OUT_REG` 寄存器的地址，可以用来控制（设置或者清除）某个 GPIO 的电平。

关于该寄存器的更多详细信息，请参阅 ESP32 技术参考手册 中的 IO_MUX 和 GPIO Matrix 章节。

同样在 `blink.c` 项目文件中，在两个 `gpio_set_level` 语句的后面各设置一个断点，单击“Memory”选项卡，然后单击“Add Memory Monitor”按钮，在弹出的对话框中输入 `0x3FF44004`。

按下 F8 按键恢复程序运行，并观察“Monitor”选项卡。

每按一下 F8，你就会看到在内存 `0x3FF44004` 地址处的一个比特位被翻转（并且 LED 会改变状态）。

要修改内存的数值，请在“Monitor”选项卡中找到待修改的内存地址，如前面观察的结果一样，输入特定比特翻转后的值。当按下回车键后，将立即看到 LED 的状态发生了改变。

观察和设置程序变量 常见的调试任务是在程序运行期间检查程序中某个变量的值，为了演示这个功能，更新 `blink.c` 文件，在 `blink_task` 函数的上面添加一个全局变量的声明 `int i`，然后在 `while(1)` 里添加 `i++`，这样每次 LED 改变状态的时候，变量 `i` 都会增加 1。

退出调试器，这样就不会与新代码混淆，然后重新构建并烧写代码到 ESP32 中，接着重启调试器。注意，这里不需要我们重启 OpenOCD。

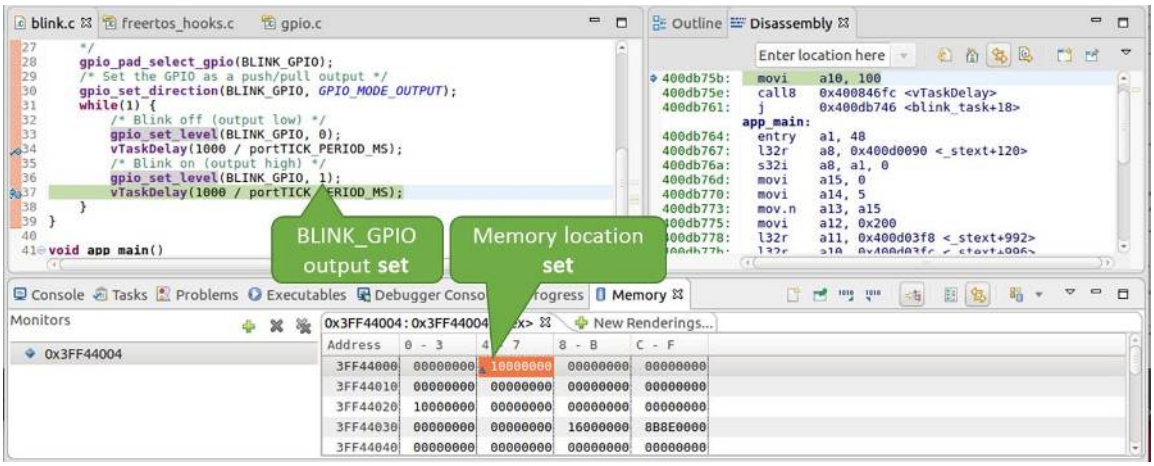

图 46: 观察内存地址 0x3FF44004 处的某个比特被置高

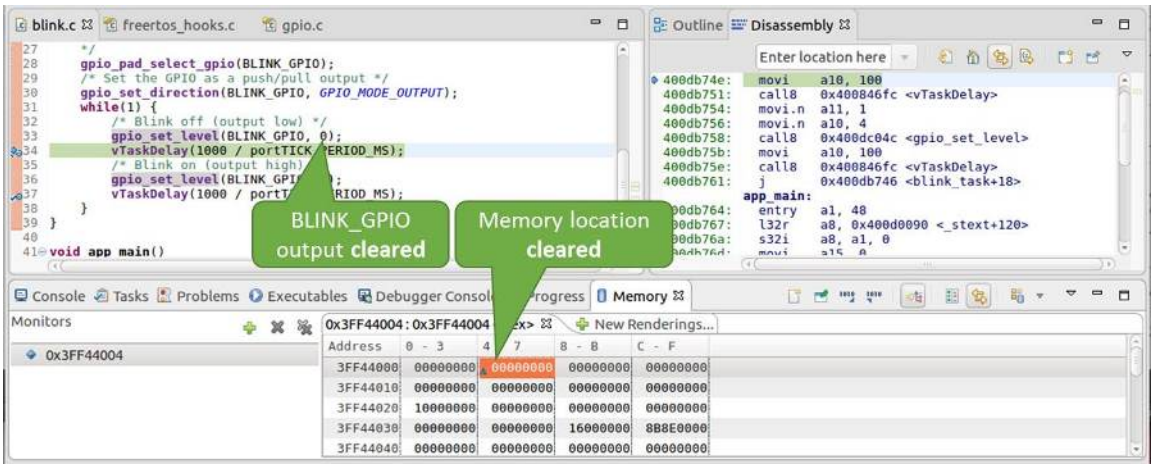

图 47: 观察内存地址 0x3FF44004 处的某个比特被置低

一旦程序停止运行，在代码 `i++` 处添加一个断点。

下一步，在 “Breakpoints” 所在的窗口中，选择 “Expressions” 选项卡。如果该选项卡不存在，请在顶部菜单栏的 Window > Show View > Expressions 中添加这一选项卡。然后在该选项卡中单击 “Add new expression”，并输入 `i`。

按下 F8 继续运行程序，每次程序停止时，都会看到变量 `i` 的值在递增。

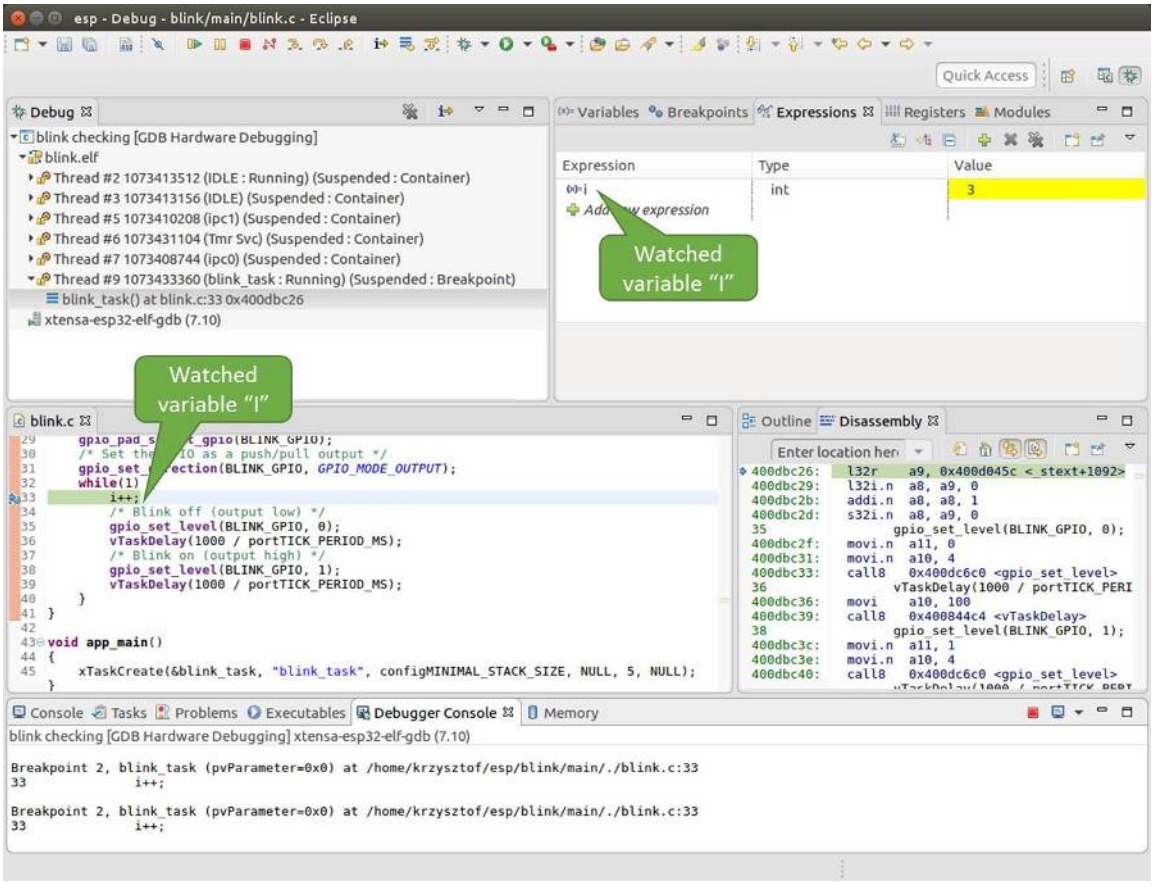

图 48: 观察程序变量 “i”

如想更改 `i` 的值，可以在 “Value” 一栏中输入新的数值。按下 “Resume (F8)” 后，程序将从新输入的数字开始递增 `i`。

设置条件断点 接下来的内容更为有趣，你可能想在一定条件满足的情况下设置断点，然后让程序停止运行。右击断点打开上下文菜单，选择 “Breakpoint Properties”，将 “Type:” 改选为 “Hardware” 然后在 “Condition:” 一栏中输入条件表达式，例如 `i == 2`。

如果当前 `i` 的值小于 2（如果有需要也可以更改这个阈值）并且程序被恢复运行，那么 LED 就会循环闪烁，直到 `i == 2` 条件成立，最后程序停止在该处。

使用命令行的调试示例 请检查您的目标板是否已经准备好，并加载了 get-started/blink 示例代码，然后按照*在命令行中使用 GDB* 中介绍的步骤配置和启动调试器，最后选择让应用程序在 `app_main()` 建立的断点处停止运行

```
Temporary breakpoint 1, app_main () at /home/user-name/esp/blink/main/./blink.c:43
43          xTaskCreate(&blink_task, "blink_task", configMINIMAL_STACK_SIZE, NULL,␣
↪5, NULL);
(gdb)
```

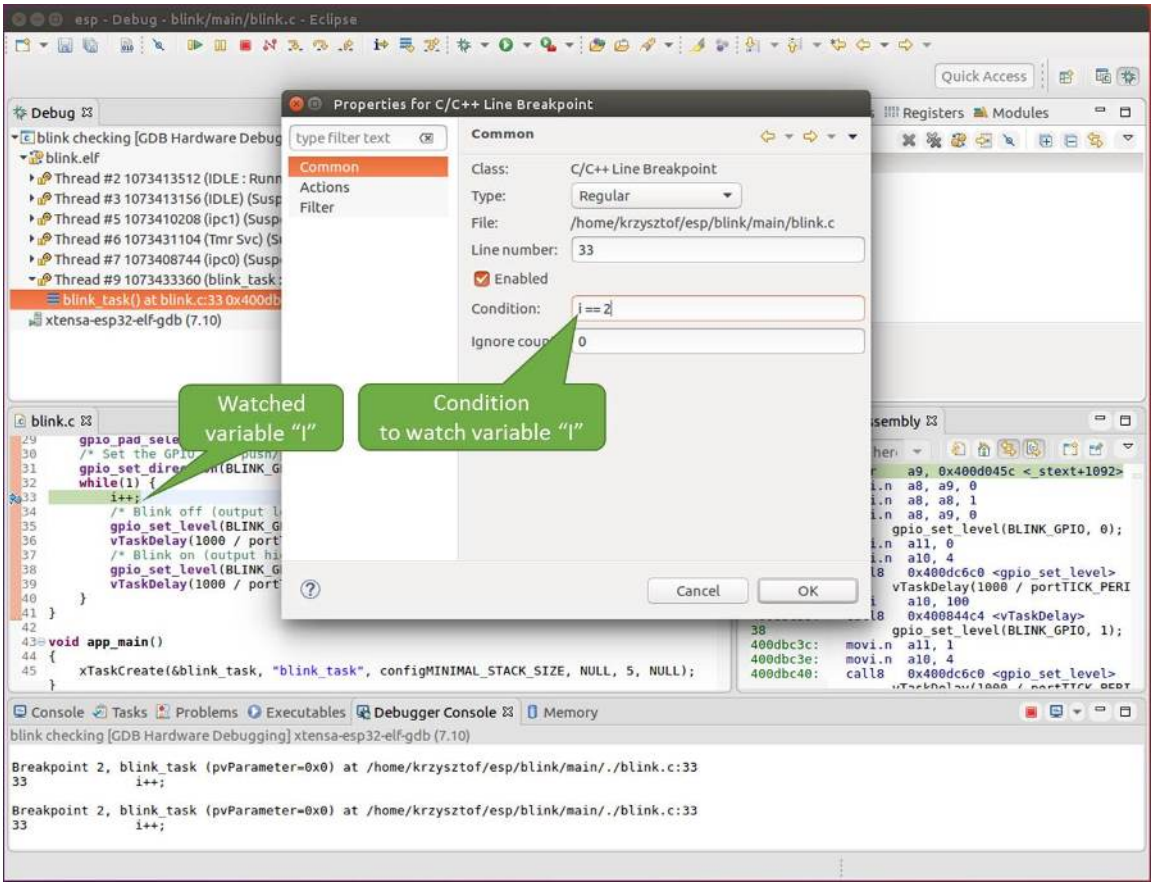
esp - Debug - blink/main/blink.c - Eclipse
Properties for C/C++ Line Breakpoint
Common
Class: C/C++ Line Breakpoint
Type: Regular
File: /home/krzysztof/esp/blink/main/blink.c
Line number: 33
Enabled
Condition: i == 2
Watched variable "i"
Condition to watch variable "i"
Cancel
OK
Debugger Console
Breakpoint 2, blink_task (pvParameter=0x0) at /home/krzysztof/esp/blink/main/./blink.c:33
33 i++;

图 49: 设置条件断点

本小节的示例

1. 浏览代码，查看堆栈和线程
2. 设置和清除断点
3. 暂停和恢复应用程序的运行
4. 单步执行代码
5. 查看并设置内存
6. 观察和设置程序变量
7. 设置条件断点

浏览代码，查看堆栈和线程 当看到 (gdb) 提示符的时候，应用程序已停止运行，LED 也停止闪烁。

要找到代码暂停的位置，输入 `l` 或者 `list` 命令，调试器会打印出停止点（`blink.c` 代码文件的第 43 行）附近的几行代码

```
(gdb) l
38          }
39      }
40
41      void app_main()
42      {
43          xTaskCreate(&blink_task, "blink_task", configMINIMAL_STACK_SIZE, NULL,␣
↪5, NULL);
44      }
(gdb)
```

也可以通过输入 `l 30, 40` 等命令来查看特定行号范围内的代码。

使用 `bt` 或者 `backtrace` 来查看哪些函数最终导致了此代码被调用:

```
(gdb) bt
#0  app_main () at /home/user-name/esp/blink/main/./blink.c:43
#1  0x400d057e in main_task (args=0x0) at /home/user-name/esp/esp-idf/components/
↪esp32/./cpu_start.c:339
(gdb)
```

输出的第 0 行表示应用程序暂停之前调用的最后一个函数，即我们之前列出的 `app_main ()`。`app_main ()` 又被位于 `cpu_start.c` 文件第 339 行的 `main_task` 函数调用。

想查看 `cpu_start.c` 文件中 `main_task` 函数的上下文，需要输入 `frame N`，其中 N = 1，因为根据前面的输出，`main_task` 位于 #1 下:

```
(gdb) frame 1
#1  0x400d057e in main_task (args=0x0) at /home/user-name/esp/esp-idf/components/
↪esp32/./cpu_start.c:339
339         app_main();
(gdb)
```

输入 `l` 将显示一段名为 `app_main()` 的代码（在第 339 行）：

```
(gdb) l
334             ;
335         }
336     #endif
337         //Enable allocation in region where the startup stacks were located.
338         heap_caps_enable_nonos_stack_heaps();
339         app_main();
340         vTaskDelete(NULL);
341     }
342
(gdb)
```

通过打印前面的一些行，你会看到我们一直在寻找的 `main_task` 函数:

```
(gdb) l 326, 341
326     static void main_task(void* args)
327     {
328         // Now that the application is about to start, disable boot watchdogs
329         REG_CLR_BIT(TIMG_WDTCONFIG0_REG(0), TIMG_WDT_FLASHBOOT_MOD_EN_S);
330         REG_CLR_BIT(RTC_CNTL_WDTCONFIG0_REG, RTC_CNTL_WDT_FLASHBOOT_MOD_EN);
331     #if !CONFIG_FREERTOS_UNICORE
332         // Wait for FreeRTOS initialization to finish on APP CPU, before␣
↪replacing its startup stack
333         while (port_xSchedulerRunning[1] == 0) {
334             ;
335         }
336     #endif
337         //Enable allocation in region where the startup stacks were located.
338         heap_caps_enable_nonos_stack_heaps();
339         app_main();
340         vTaskDelete(NULL);
341     }
(gdb)
```

如果要查看其他代码，可以输入 `i threads` 命令，则会输出目标板上运行的线程列表:

```
(gdb) i threads
  Id   Target Id         Frame
  8    Thread 1073411336 (dport) 0x400d0848 in dport_access_init_core (arg=
↪<optimized out>)
    at /home/user-name/esp/esp-idf/components/esp32/./dport_access.c:170
  7    Thread 1073408744 (ipc0) xQueueGenericReceive (xQueue=0x3ffae694,␣
↪pvBuffer=0x0, xTicksToWait=1644638200,
    xJustPeeking=0) at /home/user-name/esp/esp-idf/components/freertos/./queue.
↪c:1452
  6    Thread 1073431096 (Tmr Svc) prvTimerTask (pvParameters=0x0)
    at /home/user-name/esp/esp-idf/components/freertos/./timers.c:445
  5    Thread 1073410208 (ipc1 : Running) 0x4000bfea in ?? ()
  4    Thread 1073432224 (dport) dport_access_init_core (arg=0x0)
    at /home/user-name/esp/esp-idf/components/esp32/./dport_access.c:150
  3    Thread 1073413156 (IDLE) prvIdleTask (pvParameters=0x0)
    at /home/user-name/esp/esp-idf/components/freertos/./tasks.c:3282
  2    Thread 1073413512 (IDLE) prvIdleTask (pvParameters=0x0)
    at /home/user-name/esp/esp-idf/components/freertos/./tasks.c:3282
* 1    Thread 1073411772 (main : Running) app_main () at /home/user-name/esp/blink/
↪main/./blink.c:43
(gdb)
```

线程列表显示了每个线程最后一个被调用的函数以及所在的 C 源文件名（如果存在的话）。

您可以通过输入 `thread N` 进入特定的线程，其中 `N` 是线程 ID。我们进入 5 号线程来看一下它是如何工作的:

```
(gdb) thread 5
[Switching to thread 5 (Thread 1073410208)]
#0  0x4000bfea in ?? ()
(gdb)
```

然后查看回溯:

```
(gdb) bt
#0  0x4000bfea in ?? ()
#1  0x40083a85 in vPortCPUReleaseMutex (mux=<optimized out>) at /home/user-name/
↪esp/esp-idf/components/freertos/./port.c:415
#2  0x40083fc8 in vTaskSwitchContext () at /home/user-name/esp/esp-idf/components/
↪freertos/./tasks.c:2846
```

(下页继续)

(续上页)

```
#3  0x4008532b in _frxt_dispatch ()
#4  0x4008395c in xPortStartScheduler () at /home/user-name/esp/esp-idf/components/
↪freertos/./port.c:222
#5  0x4000000c in ?? ()
#6  0x4000000c in ?? ()
#7  0x4000000c in ?? ()
#8  0x4000000c in ?? ()
(gdb)
```

如上所示，回溯可能会包含多个条目，方便查看直至目标停止运行的函数调用顺序。如果找不到某个函数的源码文件，将会使用问号 `??` 替代，这表示该函数是以二进制格式提供的。像 `0x4000bfea` 这样的值是被调用函数所在的内存地址。

使用诸如 `bt`，`i threads`，`thread N` 和 `list` 命令可以浏览整个应用程序的代码。这给单步调试代码和设置断点带来很大的便利，下面将一一展开来讨论。

设置和清除断点 在调试时，我们希望能够在关键的代码行停止应用程序，然后检查特定的变量、内存、寄存器和外设的状态。为此我们需要使用断点，以便在特定某行代码处快速访问和停止应用程序。

我们在控制 LED 状态发生变化的两处代码行分别设置一个断点。基于以上代码列表，这两处分别为第 33 和 36 代码行。使用命令 `break M` 设置断点，其中 M 是具体的代码行:

```
(gdb) break 33
Breakpoint 2 at 0x400db6f6: file /home/user-name/esp/blink/main/./blink.c, line 33.
(gdb) break 36
Breakpoint 3 at 0x400db704: file /home/user-name/esp/blink/main/./blink.c, line 36.
```

输入命令 `c`，处理器将运行并在断点处停止。再次输入 `c` 将使其再次运行，并在第二个断点处停止，依此类推:

```
(gdb) c
Continuing.
Target halted. PRO_CPU: PC=0x400DB6F6 (active)    APP_CPU: PC=0x400D10D8

Breakpoint 2, blink_task (pvParameter=0x0) at /home/user-name/esp/blink/main/./
↪blink.c:33
33          gpio_set_level(BLINK_GPIO, 0);
(gdb) c
Continuing.
Target halted. PRO_CPU: PC=0x400DB6F8 (active)    APP_CPU: PC=0x400D10D8
Target halted. PRO_CPU: PC=0x400DB704 (active)    APP_CPU: PC=0x400D10D8

Breakpoint 3, blink_task (pvParameter=0x0) at /home/user-name/esp/blink/main/./
↪blink.c:36
36          gpio_set_level(BLINK_GPIO, 1);
(gdb)
```

只有在输入命令 `c` 恢复程序运行后才能看到 LED 改变状态。

查看已设置断点的数量和位置，请使用命令 `info break`:

```
(gdb) info break
Num     Type           Disp Enb Address    What
2       breakpoint     keep y   0x400db6f6 in blink_task at /home/user-name/esp/
↪blink/main/./blink.c:33
    breakpoint already hit 1 time
3       breakpoint     keep y   0x400db704 in blink_task at /home/user-name/esp/
↪blink/main/./blink.c:36
    breakpoint already hit 1 time
(gdb)
```

请注意，断点序号（在 Num 栏列出）从 2 开始，这是因为在调试器启动时执行 thb app_main 命令已经在 app_main() 函数处建立了第一个断点。由于它是一个临时断点，已经被自动删除，所以没有被列出。

要删除一个断点，请输入 delete N 命令（或者简写成 d N），其中 N 代表断点序号:

```
(gdb) delete 1
No breakpoint number 1.
(gdb) delete 2
(gdb)
```

更多关于断点的信息，请参阅可用的断点和观察点 和关于断点的补充知识。

暂停和恢复应用程序的运行 在调试时，可以恢复程序运行并输入代码等待某个事件发生或者保持无限循环而不设置任何断点。对于后者，想要返回调试模式，可以通过输入 Ctrl+C 手动中断程序的运行。

在此之前，请删除所有的断点，然后输入 c 恢复程序运行。接着输入 Ctrl+C，应用程序会停止在某个随机的位置，此时 LED 也将停止闪烁。调试器会打印如下信息:

```
(gdb) c
Continuing.
^CTarget halted. PRO_CPU: PC=0x400D0C00             APP_CPU: PC=0x400D0C00 (active)
[New Thread 1073433352]

Program received signal SIGINT, Interrupt.
[Switching to Thread 1073413512]
0x400d0c00 in esp_vApplicationIdleHook () at /home/user-name/esp/esp-idf/
↪components/esp32/./freertos_hooks.c:52
52              asm("waiti 0");
(gdb)
```

在上图所示的情况下，应用程序已经在 freertos_hooks.c 文件的第 52 行暂停运行，现在您可以通过输入 c 再次将其恢复运行或者进行如下所述的一些调试工作。

注解: 在 MSYS2 的 shell 中输入 Ctrl+C 并不会暂停目标的运行，而是会退出调试器。解决这个问题的方法可以通过使用 *Eclipse* 来调试 或者参考 http://www.mingw.org/wiki/Workaround_for_GDB_Ctrl_C_Interrupt 里的解决方案。

单步执行代码 我们还可以使用 step 和 next 命令（可以简写成 s 和 n）单步执行代码，这两者之间的区别是执行 “step” 命令会进入调用的子程序内部，而执行 “next” 命令则会直接将子程序看成单个源码行，单步就能将其运行结束。

在继续演示此功能之前，请使用前面介绍的 break 和 delete 命令，确保目前只在 blink.c 文件的第 36 行设置了一个断点:

```
(gdb) info break
Num     Type           Disp Enb Address    What
3       breakpoint     keep y   0x400db704 in blink_task at /home/user-name/esp/
↪blink/main/./blink.c:36
    breakpoint already hit 1 time
(gdb)
```

输入 c 恢复程序运行然后等它在断点处停止运行:

```
(gdb) c
Continuing.
Target halted. PRO_CPU: PC=0x400DB754 (active)    APP_CPU: PC=0x400D1128

Breakpoint 3, blink_task (pvParameter=0x0) at /home/user-name/esp/blink/main/./
↪blink.c:36
```

(下页继续)

(续上页)

```
36          gpio_set_level(BLINK_GPIO, 1);
(gdb)
```

然后输入 n 多次，观察调试器是如何单步执行一行代码的:

```
(gdb) n
Target halted. PRO_CPU: PC=0x400DB756 (active)    APP_CPU: PC=0x400D1128
Target halted. PRO_CPU: PC=0x400DB758 (active)    APP_CPU: PC=0x400D1128
Target halted. PRO_CPU: PC=0x400DC04C (active)    APP_CPU: PC=0x400D1128
Target halted. PRO_CPU: PC=0x400DB75B (active)    APP_CPU: PC=0x400D1128
37          vTaskDelay(1000 / portTICK_PERIOD_MS);
(gdb) n
Target halted. PRO_CPU: PC=0x400DB75E (active)    APP_CPU: PC=0x400D1128
Target halted. PRO_CPU: PC=0x400846FC (active)    APP_CPU: PC=0x400D1128
Target halted. PRO_CPU: PC=0x400DB761 (active)    APP_CPU: PC=0x400D1128
Target halted. PRO_CPU: PC=0x400DB746 (active)    APP_CPU: PC=0x400D1128
33          gpio_set_level(BLINK_GPIO, 0);
(gdb)
```

如果你输入 s，那么调试器将进入子程序:

```
(gdb) s
Target halted. PRO_CPU: PC=0x400DB748 (active)    APP_CPU: PC=0x400D1128
Target halted. PRO_CPU: PC=0x400DB74B (active)    APP_CPU: PC=0x400D1128
Target halted. PRO_CPU: PC=0x400DC04C (active)    APP_CPU: PC=0x400D1128
Target halted. PRO_CPU: PC=0x400DC04F (active)    APP_CPU: PC=0x400D1128
gpio_set_level (gpio_num=GPIO_NUM_4, level=0) at /home/user-name/esp/esp-idf/
↪components/driver/./gpio.c:183
183     GPIO_CHECK(GPIO_IS_VALID_OUTPUT_GPIO(gpio_num), "GPIO output gpio_num error
↪", ESP_ERR_INVALID_ARG);
(gdb)
```

上述例子中，调试器进入 gpio_set_level(BLINK_GPIO, 0) 代码内部，同时代码窗口快速切换到 gpio.c 驱动文件。

请参阅 *"next" 命令无法跳过子程序的原因* 文档以了解 next 命令的潜在局限。

查看并设置内存 使用命令 x 可以显示内存的内容，配合其余参数还可以调整所显示内存位置的格式和数量。运行 help x 可以查看更多相关细节。与 x 命令配合使用的命令是 set，它允许你将值写入内存。

为了演示 x 和 set 的使用，我们将在内存地址 0x3FF44004 处读取和写入内容。该地址也是 GPIO_OUT_REG 寄存器的地址，可以用来控制（设置或者清除）某个 GPIO 的电平。关于该寄存器的更多详细信息，请参阅 ESP32 技术参考手册 中的 IO_MUX 和 GPIO Matrix 章节。

同样在 blink.c 项目文件中，在两个 gpio_set_level 语句的后面各设置一个断点。输入两次 c 命令后停止在断点处，然后输入 x /1wx 0x3FF44004 来显示 GPIO_OUT_REG 寄存器的值:

```
(gdb) c
Continuing.
Target halted. PRO_CPU: PC=0x400DB75E (active)    APP_CPU: PC=0x400D1128
Target halted. PRO_CPU: PC=0x400DB74E (active)    APP_CPU: PC=0x400D1128

Breakpoint 2, blink_task (pvParameter=0x0) at /home/user-name/esp/blink/main/./
↪blink.c:34
34          vTaskDelay(1000 / portTICK_PERIOD_MS);
(gdb) x /1wx 0x3FF44004
0x3ff44004: 0x00000000
(gdb) c
Continuing.
Target halted. PRO_CPU: PC=0x400DB751 (active)    APP_CPU: PC=0x400D1128
Target halted. PRO_CPU: PC=0x400DB75B (active)    APP_CPU: PC=0x400D1128
```

(下页继续)

(续上页)

```
Breakpoint 3, blink_task (pvParameter=0x0) at /home/user-name/esp/blink/main/./
↪blink.c:37
37          vTaskDelay(1000 / portTICK_PERIOD_MS);
(gdb) x /1wx 0x3FF44004
0x3ff44004: 0x00000010
(gdb)
```

如果闪烁的 LED 连接到了 GPIO4，那么每次 LED 改变状态时你会看到第 4 比特被翻转:

```
0x3ff44004: 0x00000000
...
0x3ff44004: 0x00000010
```

现在，当 LED 熄灭时，与之对应地会显示 `0x3ff44004: 0x00000000`，尝试使用 `set` 命令向相同的内存地址写入 `0x00000010` 来将该比特置高:

```
(gdb) x /1wx 0x3FF44004
0x3ff44004: 0x00000000
(gdb) set {unsigned int}0x3FF44004=0x000010
```

在输入 `set {unsigned int}0x3FF44004=0x000010` 命令后，你会立即看到 LED 亮起。

观察和设置程序变量 常见的调试任务是在程序运行期间检查程序中某个变量的值，为了能够演示这个功能，更新 `blink.c` 文件，在 `blink_task` 函数的上面添加一个全局变量的声明 `int i`，然后在 `while(1)` 里添加 `i++`，这样每次 LED 改变状态的时候，变量 `i` 都会增加 1。

退出调试器，这样就不会与新代码混淆，然后重新构建并烧写代码到 ESP32 中，接着重启调试器。注意，这里不需要我们重启 OpenOCD。

一旦程序停止运行，输入命令 `watch i`:

```
(gdb) watch i
Hardware watchpoint 2: i
(gdb)
```

这会在所有变量 `i` 发生改变的代码处插入所谓的 “观察点”。现在输入 `continue` 命令来恢复应用程序的运行并观察它停止:

```
(gdb) c
Continuing.
Target halted. PRO_CPU: PC=0x400DB751 (active)    APP_CPU: PC=0x400D0811
[New Thread 1073432196]

Program received signal SIGTRAP, Trace/breakpoint trap.
[Switching to Thread 1073432196]
0x400db751 in blink_task (pvParameter=0x0) at /home/user-name/esp/blink/main/./
↪blink.c:33
33          i++;
(gdb)
```

多次恢复程序运行后，变量 `i` 的值会增加，现在你可以输入 `print i` （简写 `p i`）来查看当前 `i` 的值:

```
(gdb) p i
$1 = 3
(gdb)
```

要修改 `i` 的值，请使用 `set` 命令，如下所示（可以将其打印输出来查看是否确已修改）:

```
(gdb) set var i = 0
(gdb) p i
$3 = 0
(gdb)
```

最多可以使用两个观察点，详细信息请参阅可用的断点和观察点。

设置条件断点 接下来的内容更为有趣，你可能想在一定条件满足的情况下设置断点。请先删除已有的断点，然后尝试如下命令:

```
(gdb) break blink.c:34 if (i == 2)
Breakpoint 3 at 0x400db753: file /home/user-name/esp/blink/main/./blink.c, line 34.
(gdb)
```

以上命令在 `blink.c` 文件的 `34` 处设置了一个条件断点，当 `i==2` 条件满足时，程序会停止运行。

如果当前 `i` 的值小于 `2` 并且程序被恢复运行，那么 LED 就会循环闪烁，直到 `i == 2` 条件成立，最后程序停止在该处:

```
(gdb) set var i = 0
(gdb) c
Continuing.
Target halted. PRO_CPU: PC=0x400DB755 (active)    APP_CPU: PC=0x400D112C
Target halted. PRO_CPU: PC=0x400DB753 (active)    APP_CPU: PC=0x400D112C
Target halted. PRO_CPU: PC=0x400DB755 (active)    APP_CPU: PC=0x400D112C
Target halted. PRO_CPU: PC=0x400DB753 (active)    APP_CPU: PC=0x400D112C

Breakpoint 3, blink_task (pvParameter=0x0) at /home/user-name/esp/blink/main/./
↪blink.c:34
34          gpio_set_level(BLINK_GPIO, 0);
(gdb)
```

获得命令的帮助信息 目前所介绍的都是些非常基础的命令，目的在于让您快速上手 JTAG 调试。如果想获得特定命令的语法和功能相关的信息，请在 `(gdb)` 提示符下输入 `help` 和命令名:

```
(gdb) help next
Step program, proceeding through subroutine calls.
Usage: next [N]
Unlike "step", if the current source line calls a subroutine,
this command does not enter the subroutine, but instead steps over
the call, in effect treating it as a single source line.
(gdb)
```

只需输入 `help` 命令，即可获得高级命令列表，帮助你了解更多详细信息。此外，还可以参考一些 GDB 命令速查表，比如 https://darkdust.net/files/GDB%20Cheat%20Sheet.pdf。虽然不是所有命令都适用于嵌入式环境，但还是会有所裨益。

结束调试会话 输入命令 `q` 可以退出调试器:

```
(gdb) q
A debugging session is active.

    Inferior 1 [Remote target] will be detached.

Quit anyway? (y or n) y
Detaching from program: /home/user-name/esp/blink/build/blink.elf, Remote target
Ending remote debugging.
user-name@computer-name:~/esp/blink$
```

- 使用调试器
- 调试示例
- 注意事项和补充内容
- 应用层跟踪库
- ESP-Prog 调试板介绍

4.20 链接脚本生成机制

4.20.1 概述

用于存放代码和数据的:ref:‘ 内存区域 <memory-layout>‘有多个。代码和只读数据默认存放在 flash 中，可写数据存放在 RAM 中。不过有时，我们必须更改默认存放区域，例如为了提高性能，将关键代码存放到 RAM 中，或者将代码存放到 RTC 存储器中以便在唤醒桩 和 ULP 协处理器中使用。

链接脚本生成机制可以让用户指定代码和数据在 ESP-IDF 组件中的存放区域。组件包含如何存放符号、目标或完整库的信息。在构建应用程序时，组件中的这些信息会被收集、解析并处理；生成的存放规则用于链接应用程序。

4.20.2 快速上手

本段将指导如何使用 ESP-IDF 的即用方案，快速将代码和数据放入 RAM 和 RTC 存储器中。

假设我们有:

```
- components/
                - my_component/
                                - CMakeLists.txt
                                - component.mk
                                - Kconfig
                                - src/
                                      - my_src1.c
                                      - my_src2.c
                                      - my_src3.c
                                - my_linker_fragment_file.lf
```

- 名为 `my_component` 的组件，在构建过程中存储为 `libmy_component.a` 库文件
- 库文件包含的三个源文件：`my_src1.c`、`my_src2.c` 和 `my_src3.c`，编译后分别为 `my_src1.o`、`my_src2.o` 和 `my_src3.o`，
- 在 `my_src1.o` 定义的 `my_function1` 功能；在 `my_src2.o` 定义的 `my_function2` 功能
- 存储在 `my_component` 下 Kconfig 中的布尔类型配置 `PERFORMANCE_MODE` (y/n) 和整数类型配置 `PERFORMANCE_LEVEL`（范围是 0-3）

创建和指定链接片段文件

首先，我们需要创建链接片段文件。链接片段文件是一个拓展名为 `.lf` 的文本文件，文件内写有想要存放的位置。文件创建成功后，需要将其呈现在构建系统中。ESP-IDF 支持的构建系统指南如下:

Make 在组件目录的 `component.mk` 文件中设置 `COMPONENT_ADD_LDFRAGMENTS` 变量的值，使其指向已创建的链接片段文件。路径可以为绝对路径，也可以为组件目录的相对路径。

```
COMPONENT_ADD_LDFRAGMENTS += my_linker_fragment_file.lf
```

CMake 在组件目录的 CMakeLists.txt 文件中，指定 idf_component_register 调用引数 LDFRAGMENTS 的值。LDFRAGMENTS 可以为绝对路径，也可为组件目录的相对路径，指向刚才创建的链接片段文件。

```
# 相对于组件的 CMakeLists.txt 的文件路径
idf_component_register(...
                       LDFRAGMENTS "path/to/linker_fragment_file.lf" "path/to/
↪another_linker_fragment_file.lf"
                       ...
                       )
```

指定存放区域

可以按照下列粒度指定存放区域：

- 目标文件（.obj 或 .o 文件）
- 符号（函数/变量）
- 库（.a 文件）

存放目标文件 假设整个 my_src1.o 目标文件对性能至关重要，所以最好把该文件放在 RAM 中。另外，my_src2.o 目标文件包含从深度睡眠唤醒所需的符号，因此需要将其存放到 RTC 存储器中。在链接片段文件中可以写入以下内容：

```
[mapping:my_component]
archive: libmy_component.a
entries:
    my_src1 (noflash)      # 将所有 my_src1 代码和只读数据存放在 IRAM 和 DRAM 中
    my_src2 (rtc)          # 将所有 my_src2 代码、数据和只读数据存放到 RTC 快速 RAM 和 RTC␣
↪慢速 RAM 中
```

那么 my_src3.o 放在哪里呢？由于未指定存放区域，my_src3.o 会存放到默认区域。更多关于默认存放区域的信息，请查看这里。

存放符号 继续上文的例子，假设 object1.o 目标文件定义的功能中，只有 function1 影响到性能；object2.o 目标文件中只有 function2 需要在芯片从深度睡眠中唤醒后运行。可以在链接片段文件中写入以下内容实现：

```
[mapping:my_component]
archive: libmy_component.a
entries:
    my_src1:my_function1 (noflash)
    my_src2:my_function2 (rtc)
```

my_src1.o 和 my_src2.o 中的其他函数以及整个 object3.o 目标文件会存放到默认区域。要指定数据的存放区域，仅需将上文的函数名替换为变量名即可，如：

```
my_src1:my_variable (noflash)
```

注意： 按照符号粒度存放代码和数据有一定的局限。为确保存放区域合适，您也可以将相关代码和数据集中在源文件中，参考使用目标文件的存放规则。

存放整个库 在这个例子中，假设整个组件库都需存放到 RAM 中，可以写入以下内容实现：

```
[mapping:my_component]
archive: libmy_component.a
entries:
    * (noflash)
```

类似的，写入以下内容可以将整个组件存放到 RTC 存储器中：

```
[mapping:my_component]
archive: libmy_component.a
entries:
    * (rtc)
```

根据具体配置存放 假设只有在某个条件为真时，比如 `CONFIG_PERFORMANCE_MODE == y` 时，整个组件库才有特定存放区域，可以写入以下内容实现：

```
[mapping:my_component]
archive: libmy_component.a
entries:
    if PERFORMANCE_MODE = y:
        * (noflash)
    else:
        * (default)
```

来看一种更复杂的情况。假设 "CONFIG_PERFORMANCE_LEVEL == 1" 时，只有 `object1.o` 存放到 RAM 中；`CONFIG_PERFORMANCE_LEVEL == 2` 时，`object1.o` 和 `object2.o` 会存放到 RAM 中；`CONFIG_PERFORMANCE_LEVEL == 3` 时，库中的所有目标文件都会存放到 RAM 中。以上三个条件为假时，整个库会存放到 RTC 存储器中。虽然这种使用场景很罕见，不过，还是可以通过以下方式实现：

```
[mapping:my_component]
archive: libmy_component.a
entries:
    if PERFORMANCE_LEVEL = 1:
        my_src1 (noflash)
    elif PERFORMANCE_LEVEL = 2:
        my_src1 (noflash)
        my_src2 (noflash)
    elif PERFORMANCE_LEVEL = 3:
        my_src1 (noflash)
        my_src2 (noflash)
        my_src3 (noflash)
    else:
        * (rtc)
```

也可以嵌套条件检查。以下内容与上述片段等效：

```
[mapping:my_component]
archive: libmy_component.a
entries:
    if PERFORMANCE_LEVEL <= 3 && PERFORMANCE_LEVEL > 0:
        if PERFORMANCE_LEVEL >= 1:
            object1 (noflash)
            if PERFORMANCE_LEVEL >= 2:
                object2 (noflash)
                if PERFORMANCE_LEVEL >= 3:
                    object2 (noflash)
    else:
        * (rtc)
```

默认存放区域

到目前为止，“默认存放区域”在未指定 rtc 和 noflash 存放规则时才会使用，作为备选方案。需要注意的是，noflash 或者 rtc 标记不仅仅是关键字，实际上还是被称作片段的实体，确切地说是协议。

与 rtc 和 noflash 类似，还有一个 默认协议，定义了默认存放规则。顾名思义，该协议规定了代码和数据通常存放的区域，即代码和恒量存放在 flash 中，变量存放在 RAM 中。更多关于默认协议的信息，请见这里。

注解： 使用链接脚本生成机制的 IDF 组件示例，请参阅 freertos/CMakeLists.txt。为了提高性能，freertos 使用链接脚本生成机制，将其目标文件存放到 RAM 中。

快速入门指南到此结束，下文将详述这个机制的内核，有助于创建自定义存放区域或修改默认方式。

4.20.3 链接脚本生成机制内核

链接是将 C/C++ 源文件转换成可执行文件的最后一步。链接由工具链的链接器完成，接受指定代码和数据存放区域等信息的链接脚本。链接脚本生成机制的转换过程类似，区别在于传输给链接器的链接脚本根据 (1) 收集的链接片段文件 和 (2) 链接脚本模板 动态生成。

注解： 执行链接脚本生成机制的工具存放在 tools/ldgen 之下。

链接片段文件

如快速入门指南所述，片段文件是拓展名为 .lf 的简单文本文件，内含想要存放区域的信息。不过，这是对片段文件所包含内容的简化版描述。实际上，片段文件内包含的是“片段”。片段是实体，包含多条信息，这些信息放在一起组成了存放规则，说明目标文件各个段在二进制输出文件中的存放位置。片段一共有三种，分别是段、协议 和映射。

语法 三种片段类型使用同一种语法：

```
[type:name]
key: value
key:
    value
    value
    value
    ...
```

- 类型：片段类型，可以为 段、协议或 映射。
- 名称：片段名称，指定片段类型的片段名称应唯一。
- 键值：片段内容。每个片段类型可支持不同的键值和不同的键值语法。

注解： 多个片段的类型和名称相同时会引发异常。

注解： 片段名称和键值只能使用字母、数字和下划线。

条件检查

条件检查使得链接脚本生成机制可以感知配置。含有配置值的表达式是否为真，决定了使用哪些特定键值。检查使用的是 kconfiglib 脚本的 eval_string，遵循该脚本要求的语法和局限性，支持：

- **比较**

  - 小于 <
  - 小于等于 <=
  - 大于 >
  - 大于等于 >=
  - 等于 =
  - 不等于 !=
- **逻辑**
  - 或 ||
  - 和 &&
  - 否定？取反？ !
- **分组**
  - 圆括号 ()

条件检查和其他语言中的 `if...elseif/elif...else` 块作用一样。键值和完整片段都可以进行条件检查。以下两个示例效果相同：

```
# 键值取决于配置
[type:name]
key_1:
    if CONDITION = y:
        value_1
    else:
        value_2
key_2:
    if CONDITION = y:
        value_a
    else:
        value_b
```

```
# 完整片段的定义取决于配置
if CONDITION = y:
    [type:name]
    key_1:
        value_1
    key_2:
        value_b
else:
    [type:name]
    key_1:
        value_2
    key_2:
        value_b
```

注释

链接片段文件中的注释以 # 开头。和在其他语言中一样，注释提供了有用的描述和资料，在处理过程中会被忽略。

与 ESP-IDF v3.x 链接脚本片段文件兼容 ESP-IDF v4.0 变更了链接脚本片段文件使用的一些语法：

- 必须缩进，缩进不当的文件会产生解析异常；旧版本不强制缩进，但之前的文档和示例均遵循了正确的缩进语法
- 条件改用 `if...elif...else` 结构，可以嵌套检查，将完整片段置于条件内
- 映射片段和其他片段类型一样，需有名称

链接脚本生成器可解析 ESP-IDF v3.x 版本中缩进正确的链接片段文件（如 ESP-IDF v3.x 版本中的本文件所示），依然可以向后兼容此前的映射片段语法（可选名称和条件的旧语法），但是会有弃用警告。用户应换成本文档介绍的新语法，因为旧语法将在未来停用。

请注意，ESP-IDF v3.x 不支持使用 ESP-IDF v4.0 新语法的链接片段文件。

类型 **段**

段定义了 GCC 编译器输出的一系列目标文件段，可以是默认段（如 .text、.data），也可以是用户通过 __attribute__ 关键字定义的段。

'+' 表示段列表开始，且当前段为列表中的第一个段。这种表达方式更加推荐。

```
[sections:name]
entries:
    .section+
    .section
    ...
```

示例：

```
# 不推荐的方式
[sections:text]
entries:
    .text
    .text.*
    .literal
    .literal.*

# 推荐的方式，效果与上面等同
[sections:text]
entries:
    .text+              # 即 .text 和 .text.*
    .literal+           # 即 .literal 和 .literal.*
```

协议

协议定义了每个段对应的 目标。

```
[scheme:name]
entries:
    sections -> target
    sections -> target
    ...
```

示例：

```
[scheme:noflash]
entries:
    text -> iram0_text          # text 段下的所有条目均归入 iram0_text
    rodata -> dram0_data        # rodata 段下的所有条目均归入 dram0_data
```

默认协议

注意，有一个 默认的协议很特殊，特殊在于包罗存放规则都是根据这个协议中的条目生成的。这意味着，如果该协议有一条条目是 text -> flash_text，则将为目标 flash_text 生成如下的存放规则:

```
*(.literal .literal.* .text .text.*)
```

这些生成的包罗规则将用于未指定映射规则的情况。

默认协议在 esp32/ld/esp32_fragments.lf 文件中定义，快速上手指南中提到的内置 noflash 协议和 rtc 协议也在该文件中定义。

映射

映射定义了可映射实体（即目标文件、函数名、变量名和库）对应的协议。

```
[mapping]
archive: archive                # 构建后输出的库文件名称（即 libxxx.a）
```

(下页继续)

(续上页)

```
entries:
    object:symbol (scheme)      # 符号
    object (scheme)             # 目标
    * (scheme)                  # 库
```

有三种存放粒度：

- 符号：指定了目标文件名称和符号名称。符号名称可以是函数名或变量名。
- 目标：只指定目标文件名称。
- 库：指定 *，即某个库下面所有目标文件的简化表达法。

为了更好地理解条目的含义，我们看一个按目标存放的例子。

```
object (scheme)
```

根据条目定义，将这个协议展开：

```
object (sections -> target,
        sections -> target,
        ...)
```

再根据条目定义，将这个段展开：

```
object (.section,
        .section,
        ... -> target, # 根据目标文件将这里所列出的所有段放在该目标位置

        .section,
        .section,
        ... -> target, # 同样的方法指定其他段

        ...)           # 直至所有段均已展开
```

示例：

```
[mapping:map]
archive: libfreertos.a
entries:
    * (noflash)
```

按符号存放 按符号存放可通过编译器标志 `-ffunction-sections` 和 `-fdata-sections` 实现。ESP-IDF 默认用这些标志编译。用户若选择移除标志，便不能按符号存放。另外，即便有标志，也会其他限制，具体取决于编译器输出的段。

比如，使用 `-ffunction-sections`，针对每个功能会输出单独的段。段的名称可以预测，即 `.text.{func_name}` 和 `.literal.{func_name}`。但是功能内的字符串并非如此，因为字符串会进入字符串池，或者使用生成的段名称。

使用 `-fdata-sections`，对全局数据来说编译器可输出 `.data.{var_name}`、`.rodata.{var_name}` 或 `.bss.{var_name}`；因此类型 `I` 映射词条可以适用。但是，功能中声明的静态数据并非如此，生成的段名称是将变量名称和其他信息混合。

链接脚本模板

链接脚本模板是指定存放规则的存放位置的框架，与其他链接脚本没有本质区别，但带有特定的标记语法，可以指示存放生成的存放规则的位置。

如需引用一个 目标标记下的所有存放规则，请使用以下语法：

```
mapping[target]
```

示例：

以下示例是某个链接脚本模板的摘录，定义了输出段 `.iram0.text`，该输出段包含一个引用目标 `iram0_text` 的标记。

```
.iram0.text :
{
    /* 标记 IRAM 空间不足 */
    _iram_text_start = ABSOLUTE(.);

    /* 引用 iram0_text */
    mapping[iram0_text]

    _iram_text_end = ABSOLUTE(.);
} > iram0_0_seg
```

假设链接脚本生成器收集到了以下片段定义：

```
[sections:text]
    .text+
    .literal+

[sections:iram]
    .iram1+

[scheme:default]
entries:
    text -> flash_text
    iram -> iram0_text

[scheme:noflash]
entries:
    text -> iram0_text

[mapping:freertos]
archive: libfreertos.a
entries:
    * (noflash)
```

则该脚本生成器生成的链接脚本文件，其摘录应如下所示：

```
.iram0.text :
{
    /* 标记 IRAM 空间不足 */
    _iram_text_start = ABSOLUTE(.);

    /* 处理片段生成的存放规则，存放在模板标记的位置处 */
    *(.iram1 .iram1.*)
    *libfreertos.a:(.literal .text .literal.* .text.*)

    _iram_text_end = ABSOLUTE(.);
} > iram0_0_seg
```

`*libfreertos.a:(.literal .text .literal.* .text.*)`

> 这是根据 `freertos` 映射的 `* (noflash)` 条目生成的规则。`libfreertos.a` 库下所有目标文件的所有 `text` 段会收集到 `iram0_text` 目标下（按照 `noflash` 协议），并放在模板中被 `iram0_text` 标记的地方。

`*(.iram1 .iram1.*)`

这是根据默认协议条目 `iram -> iram0_text` 生成的规则。默认协议指定了 `iram -> iram0_text` 条目，因此生成的规则同样也放在被 `iram0_text` 标记的地方。由于该规则是根据默认协议生成的，因此在同一目标下收集的所有规则下排在第一位。

目前使用的链接脚本模板是 esp32/ld/esp32.project.ld.in，由 `esp32` 组件指定，生成的脚本存放在构建目录下。

4.21 lwIP

ESP-IDF uses the open source lwIP lightweight TCP/IP stack. The ESP-IDF version of lwIP (esp-lwip) has some modifications and additions compared to the upstream project.

4.21.1 Supported APIs

ESP-IDF supports the following lwIP TCP/IP stack functions:

- *BSD Sockets API*
- *Netconn API* is enabled but not officially supported for ESP-IDF applications

Adapted APIs

Some common lwIP "app" APIs are supported indirectly by ESP-IDF:

- DHCP Server & Client are supported indirectly via the *ESP-NETIF* functionality
- Simple Network Time Protocol (SNTP) is supported via the lwip/include/apps/sntp/sntp.h lwip/lwip/src/include/lwip/apps/sntp.h functions (see also *SNTP Time Synchronization*)
- ICMP Ping is supported using a variation on the lwIP ping API. See *ICMP Echo*.
- NetBIOS lookup is available using the standard lwIP API. protocols/http_server/restful_server has an option to demonstrate using NetBIOS to look up a host on the LAN.
- mDNS uses a different implementation to the lwIP default mDNS (see *mDNS 服务*), but lwIP can look up mDNS hosts using standard APIs such as `gethostbyname()` and the convention `hostname.local`, provided the *CONFIG_LWIP_DNS_SUPPORT_MDNS_QUERIES* setting is enabled.

4.21.2 BSD Sockets API

The BSD Sockets API is a common cross-platform TCP/IP sockets API that originated in the Berkeley Standard Distribution of UNIX but is now standardized in a section of the POSIX specification. BSD Sockets are sometimes called POSIX Sockets or Berkeley Sockets.

As implemented in ESP-IDF, lwIP supports all of the common usages of the BSD Sockets API.

References

A wide range of BSD Sockets reference material is available, including:

- Single UNIX Specification BSD Sockets page
- Berkeley Sockets Wikipedia page

Examples

A number of ESP-IDF examples show how to use the BSD Sockets APIs:

- protocols/sockets/tcp_server
- protocols/sockets/tcp_client
- protocols/sockets/udp_server

- protocols/sockets/udp_client
- protocols/sockets/udp_multicast
- protocols/http_request (Note: this is a simplified example of using a TCP socket to send an HTTP request. The *ESP HTTP Client* is a much better option for sending HTTP requests.)

Supported functions

The following BSD socket API functions are supported. For full details see lwip/lwip/src/include/lwip/sockets.h.

- `socket()`
- `bind()`
- `accept()`
- `shutdown()`
- `getpeername()`
- `getsockopt()` & `setsockopt()` (see *Socket Options*)
- `close()` (via 虚拟文件系统组件)
- `read()`, `readv()`, `write()`, `writev()` (via 虚拟文件系统组件)
- `recv()`, `recvmsg()`, `recvfrom()`
- `send()`, `sendmsg()`, `sendto()`
- `select()` (via 虚拟文件系统组件)
- `poll()` (Note: on ESP-IDF, `poll()` is implemented by calling select internally, so using `select()` directly is recommended if a choice of methods is available.)
- `fcntl()` (see *fcntl*)

Non-standard functions:

- `ioctl()` (see *ioctls*)

注解: Some lwIP application sample code uses prefixed versions of BSD APIs, for example `lwip_socket()` instead of the standard `socket()`. Both forms can be used with ESP-IDF, but using standard names is recommended.

Socket Error Handling

BSD Socket error handling code is very important for robust socket applications. Normally the socket error handling involves the following aspects:

- Detecting the error.
- Geting the error reason code.
- Handle the error according to the reason code.

In lwIP, we have two different scenarios of handling socket errors:

- Socket API returns an error. For more information, see *Socket API Errors*.
- `select(int maxfdp1, fd_set *readset, fd_set *writeset, fd_set *exceptset, struct timeval *timeout)` has exception descriptor indicating that the socket has an error. For more information, see *select() Errors*.

Socket API Errors

The error detection

- We can know that the socket API fails according to its return value.

Get the error reason code

- When socket API fails, the return value doesn't contain the failure reason and the application can get the error reason code by accessing errno. Different values indicate different meanings. For more information, see <*Socket Error Reason Code*>.

Example:

```
int err;
int sockfd;

if (sockfd = socket(AF_INET,SOCK_STREAM,0) < 0) {
    // the error code is obtained from errno
    err = errno;
    return err;
}
```

select() Errors

The error detection

- Socket error when `select()` has exception descriptor

Get the error reason code

- If the `select` indicates that the socket fails, we can't get the error reason code by accessing errno, instead we should call `getsockopt()` to get the failure reason code. Because `select()` has exception descriptor, the error code will not be given to errno.

注解: `getsockopt` function prototype `int getsockopt(int s, int level, int optname, void *optval, socklen_t *optlen)`. Its function is to get the current value of the option of any type, any state socket, and store the result in optval. For example, when you get the error code on a socket, you can get it by `getsockopt(sockfd, SOL_SOCKET, SO_ERROR, &err, &optlen)`.

Example:

```
int err;

if (select(sockfd + 1, NULL, NULL, &exfds, &tval) <= 0) {
    err = errno;
    return err;
} else {
    if (FD_ISSET(sockfd, &exfds)) {
        // select() exception set using getsockopt()
        int optlen = sizeof(int);
        getsockopt(sockfd, SOL_SOCKET, SO_ERROR, &err, &optlen);
        return err;
    }
}
```

Socket Error Reason Code Below is a list of common error codes. For more detailed list of standard POSIX/C error codes, please see *newlib errno.h <https://github.com/espressif/newlib-esp32/blob/master/newlib/libc/include/sys/errno.h>* and the platform-specific extensions newlib/platform_include/errno.h

Error code	Description
ECONNREFUSED	Connection refused
EADDRINUSE	Address already in use
ECONNABORTED	Software caused connection abort
ENETUNREACH	Network is unreachable
ENETDOWN	Network interface is not configured
ETIMEDOUT	Connection timed out
EHOSTDOWN	Host is down
EHOSTUNREACH	Host is unreachable
EINPROGRESS	Connection already in progress
EALREADY	Socket already connected
EDESTADDRREQ	Destination address required
EPROTONOSUPPORT	Unknown protocol

Socket Options

The `getsockopt()` and `setsockopt()` functions allow getting/setting per-socket options.

Not all standard socket options are supported by lwIP in ESP-IDF. The following socket options are supported:

Common options Used with level argument `SOL_SOCKET`.

- `SO_REUSEADDR` (available if *CONFIG_LWIP_SO_REUSE* is set, behavior can be customized by setting *CONFIG_LWIP_SO_REUSE_RXTOALL*)
- `SO_KEEPALIVE`
- `SO_BROADCAST`
- `SO_ACCEPTCONN`
- `SO_RCVBUF` (available if *CONFIG_LWIP_SO_RCVBUF* is set)
- `SO_SNDTIMEO` / `SO_RCVTIMEO`
- `SO_ERROR` (this option is only used with `select()`, see *Socket Error Handling*)
- `SO_TYPE`
- `SO_NO_CHECK` (for UDP sockets only)

IP options Used with level argument `IPPROTO_IP`.

- `IP_TOS`
- `IP_TTL`
- `IP_PKTINFO` (available if *CONFIG_LWIP_NETBUF_RECVINFO* is set)

For multicast UDP sockets:

- `IP_MULTICAST_IF`
- `IP_MULTICAST_LOOP`
- `IP_MULTICAST_TTL`
- `IP_ADD_MEMBERSHIP`
- `IP_DROP_MEMBERSHIP`

TCP options TCP sockets only. Used with level argument `IPPROTO_TCP`.

- `TCP_NODELAY`

Options relating to TCP keepalive probes:

- `TCP_KEEPALIVE` (int value, TCP keepalive period in milliseconds)
- `TCP_KEEPIDLE` (same as `TCP_KEEPALIVE`, but the value is in seconds)
- `TCP_KEEPINTVL` (int value, interval between keepalive probes in seconds)
- `TCP_KEEPCNT` (int value, number of keepalive probes before timing out)

IPv6 options IPv6 sockets only. Used with level argument `IPPROTO_IPV6`

- `IPV6_CHECKSUM`
- `IPV6_V6ONLY`

For multicast IPv6 UDP sockets:

- `IPV6_JOIN_GROUP` / `IPV6_ADD_MEMBERSHIP`
- `IPV6_LEAVE_GROUP` / `IPV6_DROP_MEMBERSHIP`
- `IPV6_MULTICAST_IF`
- `IPV6_MULTICAST_HOPS`
- `IPV6_MULTICAST_LOOP`

fcntl

The `fcntl()` function is a standard API for manipulating options related to a file descriptor. In ESP-IDF, the 虚拟文件系统组件 layer is used to implement this function.

When the file descriptor is a socket, only the following `fcntl()` values are supported:

- `O_NONBLOCK` to set/clear non-blocking I/O mode. Also supports `O_NDELAY`, which is identical to `O_NONBLOCK`.
- `O_RDONLY`, `O_WRONLY`, `O_RDWR` flags for different read/write modes. These can read via `F_GETFL` only, they cannot be set using `F_SETFL`. A TCP socket will return a different mode depending on whether the connection has been closed at either end or is still open at both ends. UDP sockets always return `O_RDWR`.

ioctls

The `ioctl()` function provides a semi-standard way to access some internal features of the TCP/IP stack. In ESP-IDF, the 虚拟文件系统组件 layer is used to implement this function.

When the file descriptor is a socket, only the following `ioctl()` values are supported:

- `FIONREAD` returns the number of bytes of pending data already received in the socket's network buffer.
- `FIONBIO` is an alternative way to set/clear non-blocking I/O status for a socket, equivalent to `fcntl(fd, F_SETFL, O_NONBLOCK, ...)`.

4.21.3 Netconn API

lwIP supports two lower level APIs as well as the BSD Sockets API: the Netconn API and the Raw API.

The lwIP Raw API is designed for single threaded devices and is not supported in ESP-IDF.

The Netconn API is used to implement the BSD Sockets API inside lwIP, and it can also be called directly from ESP-IDF apps. This API has lower resource usage than the BSD Sockets API, in particular it can send and receive data without needing to first copy it into internal lwIP buffers.

重要： Espressif does not test the Netconn API in ESP-IDF. As such, this functionality is *enabled but not supported*. Some functionality may only work correctly when used from the BSD Sockets API.

For more information about the Netconn API, consult lwip/lwip/src/include/lwip/api.h and this wiki page which is part of the unofficial lwIP Application Developers Manual.

4.21.4 lwIP FreeRTOS Task

lwIP creates a dedicated TCP/IP FreeRTOS task to handle socket API requests from other tasks.

A number of configuration items are available to modify the task and the queues ("mailboxes") used to send data to/from the TCP/IP task:

- *CONFIG_LWIP_TCPIP_RECVMBOX_SIZE*
- *CONFIG_LWIP_TCPIP_TASK_STACK_SIZE*
- *CONFIG_LWIP_TCPIP_TASK_AFFINITY*

4.21.5 esp-lwip custom modifications

Additions

The following code is added which is not present in the upstream lwIP release:

Thread-safe sockets It is possible to `close()` a socket from a different thread to the one that created it. The `close()` call will block until any function calls currently using that socket from other tasks have returned.

It is, however, not possible to delete a task while it is actively waiting on `select()` or `poll()` APIs. It is always necessary that these APIs exit before destroying the task, as this might corrupt internal structures and cause subsequent crashes of the lwIP. (These APIs allocate globally referenced callback pointers on stack, so that when the task gets destroyed before unrolling the stack, the lwIP would still hold pointers to the deleted stack)

On demand timers lwIP IGMP and MLD6 features both initialize a timer in order to trigger timeout events at certain times.

The default lwIP implementation is to have these timers enabled all the time, even if no timeout events are active. This increases CPU usage and power consumption when using automatic light sleep mode. `esp-lwip` default behaviour is to set each timer "on demand" so it is only enabled when an event is pending.

To return to the default lwIP behaviour (always-on timers), disable *CONFIG_LWIP_TIMERS_ONDEMAND*.

Lwip timers API When users are not using WiFi, these APIs provide users with the ability to turn off LwIP timer to reduce power consumption.

The following API functions are supported. For full details see lwip/lwip/src/include/lwip/timeouts.h.

- `sys_timeouts_init()`
- `sys_timeouts_deinit()`

Abort TCP connections when IP changes *CONFIG_LWIP_TCP_KEEP_CONNECTION_WHEN_IP_CHANGES* is disabled by default. This disables the default lwIP behaviour of keeping TCP connections open if an interface IP changes, in case the interface IP changes back (for example, if an interface connection goes down and comes back up). Enable this option to keep TCP connections open in this case, until they time out normally. This may increase the number of sockets in use if a network interface goes down temporarily.

Additional Socket Options

- Some standard IPV4 and IPV6 multicast socket options are implemented (see *Socket Options*).
- Possible to set IPV6-only UDP and TCP sockets with `IPV6_V6ONLY` socket option (normal lwIP is TCP only).

IP layer features

- IPV4 source based routing implementation is different.
- IPV4 mapped IPV6 addresses are supported.

Limitations

Calling `send()` or `sendto()` repeatedly on a UDP socket may eventually fail with `errno` equal to `ENOMEM`. This is a limitation of buffer sizes in the lower layer network interface drivers. If all driver transmit buffers are full then UDP transmission will fail. Applications sending a high volume of UDP datagrams who don't wish for any to be dropped by the sender should check for this error code and re-send the datagram after a short delay.

Increasing the number of TX buffers in the *Wi-Fi* or *Ethernet* project configuration (as applicable) may also help.

4.21.6 Performance Optimization

TCP/IP performance is a complex subject, and performance can be optimized towards multiple goals. The default settings of ESP-IDF are tuned for a compromise between throughput, latency, and moderate memory usage.

Maximum throughput

Espressif tests ESP-IDF TCP/IP throughput using the wifi/iperf example in an RF sealed enclosure.

The wifi/iperf/sdkconfig.defaults file for the iperf example contains settings known to maximize TCP/IP throughput, usually at the expense of higher RAM usage. To get maximum TCP/IP throughput in an application at the expense of other factors then suggest applying settings from this file into the project sdkconfig.

重要： Suggest applying changes a few at a time and checking the performance each time with a particular application workload.

- If a lot of tasks are competing for CPU time on the system, consider that the lwIP task has configurable CPU affinity (*CONFIG_LWIP_TCPIP_TASK_AFFINITY*) and runs at fixed priority `ESP_TASK_TCPIP_PRIO` (18). Configure competing tasks to be pinned to a different core, or to run at a lower priority.
- If using `select()` function with socket arguments only, setting *CONFIG_LWIP_USE_ONLY_LWIP_SELECT* will make `select()` calls faster.

If using a Wi-Fi network interface, please also refer to *Wi-Fi 缓冲区使用情况*.

Minimum latency

Except for increasing buffer sizes, most changes which increase throughput will also decrease latency by reducing the amount of CPU time spent in lwIP functions.

- For TCP sockets, lwIP supports setting the standard `TCP_NODELAY` flag to disable Nagle's algorithm.

Minimum RAM usage

Most lwIP RAM usage is on-demand, as RAM is allocated from the heap as needed. Therefore, changing lwIP settings to reduce RAM usage may not change RAM usage at idle but can change it at peak.

- Reducing *CONFIG_LWIP_MAX_SOCKETS* reduces the maximum number of sockets in the system. This will also cause TCP sockets in the `WAIT_CLOSE` state to be closed and recycled more rapidly (if needed to open a new socket), further reducing peak RAM usage.
- Reducing *CONFIG_LWIP_TCPIP_RECVMBOX_SIZE*, *CONFIG_LWIP_TCP_RECVMBOX_SIZE* and *CONFIG_LWIP_UDP_RECVMBOX_SIZE* reduce memory usage at the expense of throughput, depending on usage.
- Reducing *CONFIG_LWIP_TCP_MSL*, *CONFIG_LWIP_TCP_FIN_WAIT_TIMEOUT* reduces the maximum segment lifetime in the system. This will also cause TCP sockets in the `TIME_WAIT`, `FIN_WAIT_2` state to be closed and recycled more rapidly
- Disable *CONFIG_LWIP_IPV6* can save about 39 KB for firmware size and 2KB RAM when system power up and 7KB RAM when TCPIP stack running. If there is no requirement for supporting IPV6 then it can be disabled to save flash and RAM footprint.

If using Wi-Fi, please also refer to *Wi-Fi 缓冲区使用情况*.

Peak Buffer Usage The peak heap memory that lwIP consumes is the **theoretically-maximum memory** that the lwIP driver consumes. Generally, the peak heap memory that lwIP consumes depends on:

- the memory required to create a UDP connection: lwip_udp_conn
- the memory required to create a TCP connection: lwip_tcp_conn
- the number of UDP connections that the application has: lwip_udp_con_num
- the number of TCP connections that the application has: lwip_tcp_con_num
- the TCP TX window size: lwip_tcp_tx_win_size
- the TCP RX window size: lwip_tcp_rx_win_size

So, the peak heap memory that the LwIP consumes can be calculated with the following formula:
lwip_dynamic_peek_memory = (lwip_udp_con_num * lwip_udp_conn) + (lwip_tcp_con_num * (lwip_tcp_tx_win_size + lwip_tcp_rx_win_size + lwip_tcp_conn))

Some TCP-based applications need only one TCP connection. However, they may choose to close this TCP connection and create a new one when an error (such as a sending failure) occurs. This may result in multiple TCP connections existing in the system simultaneously, because it may take a long time for a TCP connection to close, according to the TCP state machine (refer to RFC793).

4.22 应用程序的内存布局

ESP32 芯片具有灵活的内存映射功能，本小节将介绍 ESP-IDF 默认使用这些功能的方式。

ESP-IDF 应用程序的代码可以放在以下内存区域之一。

4.22.1 IRAM（指令 RAM）

ESP-IDF 将内部 SRAM0 区域（在技术参考手册中有定义）的一部分分配为指令 RAM。除了开始的 64kB 用作 PRO CPU 和 APP CPU 的高速缓存外，剩余内存区域（从 `0x40080000` 至 `0x400A0000` ）被用来存储应用程序中部分需要在 RAM 中运行的代码。

一些 ESP-IDF 的组件和 WiFi 协议栈的部分代码通过链接脚本文件被存放到了这块内存区域。

如果一些应用程序的代码需要放在 IRAM 中运行，可以使用 `IRAM_ATTR` 宏定义进行声明。

```
#include "esp_attr.h"

void IRAM_ATTR gpio_isr_handler(void* arg)
{
    // ...
}
```

下面列举了应用程序中可能或者应该放入 IRAM 中运行例子。

- 当注册中断处理程序的时候设置了 `ESP_INTR_FLAG_IRAM` ，那么中断处理程序就必须要放在 IRAM 中运行。这种情况下，ISR 只能调用存放在 IRAM 或者 ROM 中的函数。注意：目前所有 FreeRTOS 的 API 都已经存放到了 IRAM 中，所以在中断中调用 FreeRTOS 的中断专属 API 是安全的。如果将 ISR 放在 IRAM 中运行，那么必须使用宏定义 `DRAM_ATTR` 将该 ISR 用到所有常量数据和调用的函数（包括但不限于 `const char` 数组）放入 DRAM 中。
- 可以将一些时间关键的代码放在 IRAM 中，这样可以缩减从 Flash 加载代码所消耗的时间。ESP32 是通过 32kB 的高速缓存来从外部 Flash 中读取代码和数据的，将函数放在 IRAM 中运行可以减少由高速缓存未命中引起的时间延迟。

4.22.2 IROM（代码从 Flash 中运行）

如果一个函数没有被显式地声明放在 IRAM 或者 RTC 内存中，则将其置于 Flash 中。Flash 技术参考手册中介绍了 Flash MMU 允许代码从 Flash 执行的机制。ESP-IDF 将从 Flash 中执行的代码放在 0x400D0000—0x40400000 区域的开始，在启动阶段，二级引导程序会初始化 Flash MMU，将代码在 Flash 中的位置映射到这个区域的开头。对这个区域的访问会被透明地缓存到 0x40070000 —0x40080000 范围内的两个 32kB 的块中。

请注意，使用 Window ABI CALLx 指令可能无法访问 0x40000000 —0x40400000 区域以外的代码，所以要特别留意应用程序是否使用了 0x40400000 —0x40800000 或者 0x40800000 —0x40C00000 区域，ESP-IDF 默认不会使用这两个区域。

4.22.3 RTC 快速内存

从深度睡眠模式唤醒后必须要运行的代码要放在 RTC 内存中，更多信息请查阅文档深度睡眠 。

4.22.4 DRAM（数据 RAM）

链接器将非常量静态数据和零初始化数据放入 0x3FFB0000 — 0x3FFF0000 这 256kB 的区域。注意，如果使用蓝牙堆栈，此区域会减少 64kB（通过将起始地址移至 0x3FFC0000 ）。如果使用了内存跟踪的功能，该区域的长度还要减少 16kB 或者 32kB。放置静态数据后，留在此区域中的剩余空间都用作运行时堆。

常量数据也可以放在 DRAM 中，例如，用在 ISR 中的常量数据（参见上面 IRAM 部分的介绍），为此需要使用 DRAM_ATTR 宏来声明。

```
DRAM_ATTR const char[] format_string = "%p %x";
char buffer[64];
sprintf(buffer, format_string, ptr, val);
```

毋庸置疑，不建议在 ISR 中使用 printf 和其余输出函数。出于调试的目的，可以在 ISR 中使用 ESP_EARLY_LOGx 来输出日志，不过要确保将 TAG 和格式字符串都放在了 DRAM 中。

宏 __NOINIT_ATTR 可以用来声明将数据放在 .noinit 段中，放在此段中的数据不会在启动时被初始化，并且在软件重启后会保留原来的值。

例子：

```
__NOINIT_ATTR uint32_t noinit_data;
```

4.22.5 DROM（数据存储在 Flash 中）

默认情况下，链接器将常量数据放入一个 4MB 区域 (0x3F400000 — 0x3F800000)，该区域用于通过 Flash MMU 和高速缓存来访问外部 Flash。一种特例情况是，字面量会被编译器嵌入到应用程序代码中。

4.22.6 RTC 慢速内存

从 RTC 内存运行的代码（例如深度睡眠模块的代码）使用的全局和静态变量必须要放在 RTC 慢速内存中。更多详细说明请查看文档深度睡眠 。

宏 RTC_NOINIT_ATTR 用来声明将数据放入 RTC 慢速内存中，该数据在深度睡眠唤醒后将保持不变。

例子：

```
RTC_NOINIT_ATTR uint32_t rtc_noinit_data;
```

4.23 DMA 能力要求

大多数的 DMA 控制器（比如 SPI，SDMMC 等）都要求发送/接收缓冲区放在 DRAM 中，并且按字对齐。我们建议将 DMA 缓冲区放在静态变量中而不是堆栈中。使用 DMA_ATTR 宏可以声明该全局/本地的静态变量具备 DMA 能力，例如：

```
DMA_ATTR uint8_t buffer[]="I want to send something";

void app_main()
{
    // 初始化代码...
    spi_transaction_t temp = {
        .tx_buffer = buffer,
        .length = 8*sizeof(buffer),
    };
    spi_device_transmit( spi, &temp );
    // 其他程序
}
```

或者：

```
void app_main()
{
    DMA_ATTR static uint8_t buffer[]="I want to send something";
    // 初始化代码...
    spi_transaction_t temp = {
        .tx_buffer = buffer,
        .length = 8*sizeof(buffer),
    };
    spi_device_transmit( spi, &temp );
    // 其他程序
}
```

在堆栈中放置 DMA 缓冲区仍然是允许的，但是你必须记住：

- **如果堆栈在 pSRAM 中，切勿尝试这么做，因为堆栈在 pSRAM 中的话就要按照** menuconfig 中使能 SPIRAM_ALLOW_STACK_EXTERNAL_MEMORY），所以请确保你的任务不在 pSRAM 中。
- **在函数中使用 WORD_ALIGNED_ATTR** 宏来修饰变量，将其放在适当的位置上，比如：

```
void app_main()
{
   uint8_t stuff;
   WORD_ALIGNED_ATTR uint8_t buffer[]="I want to send something";    //否则
buffer 数组会被存储在 stuff 变量的后面
   // 初始化代码...
   spi_transaction_t temp = {
      .tx_buffer = buffer,
      .length = 8*sizeof(buffer),
   };
   spi_device_transmit( spi, &temp );
   // 其他程序
}
```

4.24 分区表

4.24.1 概述

每片 ESP32 的 flash 可以包含多个应用程序，以及多种不同类型的数据（例如校准数据、文件系统数据、参数存储数据等）。因此，我们在 flash 的默认偏移地址 0x8000 处烧写一张分区表。

分区表的长度为 0xC00 字节（最多可以保存 95 条分区表条目）。分区表数据后还保存着该表的 MD5 校验和，用于验证分区表的完整性。此外，如果芯片使能了*安全启动* 功能，则该分区表后还会保存签名信息。

分区表中的每个条目都包括以下几个部分：Name（标签）、Type（app、data 等）、SubType 以及在 flash 中的偏移量（分区的加载地址）。

在使用分区表时，最简单的方法就是打开项目配置菜单（`idf.py menuconfig`），并在*CONFIG_PARTITION_TABLE_TYPE* 下选择一个预定义的分区表：

- “Single factory app, no OTA”
- “Factory app, two OTA definitions”

在以上两种选项中，出厂应用程序均将被烧录至 flash 的 0x10000 偏移地址处。这时，运行 *idf.py partition_table* ，即可以打印当前使用分区表的信息摘要。

4.24.2 内置分区表

以下是“Single factory app, no OTA”选项的分区表信息摘要:

```
# ESP-IDF Partition Table
# Name,    Type, SubType, Offset,  Size,    Flags
nvs,       data, nvs,     0x9000,  0x6000,
phy_init, data, phy,      0xf000,  0x1000,
factory,   app,  factory, 0x10000, 1M,
```

- flash 的 0x10000 (64 KB) 偏移地址处存放一个标记为“factory”的二进制应用程序，且启动加载器将默认加载这个应用程序。
- 分区表中还定义了两个数据区域，分别用于存储 NVS 库专用分区和 PHY 初始化数据。

以下是“Factory app, two OTA definitions”选项的分区表信息摘要:

```
# ESP-IDF Partition Table
# Name,    Type, SubType, Offset,  Size, Flags
nvs,       data, nvs,     0x9000,  0x4000,
otadata,   data, ota,     0xd000,  0x2000,
phy_init, data, phy,      0xf000,  0x1000,
factory,   app,  factory, 0x10000,  1M,
ota_0,     app,  ota_0,   0x110000, 1M,
ota_1,     app,  ota_1,   0x210000, 1M,
```

- 分区表中定义了三个应用程序分区，这三个分区的类型都被设置为“app”，但具体 app 类型不同。其中，位于 0x10000 偏移地址处的为出厂应用程序（factory），其余两个为 OTA 应用程序（ota_0，ota_1）。
- 新增了一个名为“otadata”的数据分区，用于保存 OTA 升级时需要的数据。启动加载器会查询该分区的数据，以判断该从哪个 OTA 应用程序分区加载程序。如果“otadata”分区为空，则会执行出厂程序。

4.24.3 创建自定义分区表

如果在 `menuconfig` 中选择了“Custom partition table CSV”，则还需要输入该分区表的 CSV 文件在项目中的路径。CSV 文件可以根据需要，描述任意数量的分区信息。

CSV 文件的格式与上面摘要中打印的格式相同，但是在 CSV 文件中并非所有字段都是必需的。例如下面是一个自定义的 OTA 分区表的 CSV 文件:

```
# Name,    Type, SubType,  Offset,   Size,  Flags
nvs,       data, nvs,      0x9000,  0x4000
otadata,   data, ota,      0xd000,  0x2000
phy_init, data, phy,       0xf000,  0x1000
factory,   app,  factory,  0x10000,  1M
ota_0,     app,  ota_0,    ,         1M
```

(下页继续)

(续上页)

```
ota_1,    app,  ota_1,     ,          1M
nvs_key,  data, nvs_keys,  ,        0x1000
```

- 字段之间的空格会被忽略，任何以 # 开头的行（注释）也会被忽略。
- CSV 文件中的每个非注释行均为一个分区定义。
- 每个分区的 `Offset` 字段可以为空，`gen_esp32part.py` 工具会从分区表位置的后面开始自动计算并填充该分区的偏移地址，同时确保每个分区的偏移地址正确对齐。

Name 字段

Name 字段可以是任何有意义的名称，但不能超过 16 个字符（之后的内容将被截断）。该字段对 ESP32 并不是特别重要。

Type 字段

Type 字段可以指定为 app (0x00) 或者 data (0x01)，也可以直接使用数字 0-254（或者十六进制 0x00-0xFE）。注意，0x00-0x3F 不得使用（预留给 esp-idf 的核心功能）。

如果您的应用程序需要以 ESP-IDF 尚未支持的格式存储数据，请在 0x40-0xFE 内添加一个自定义分区类型。

参考*esp_partition_type_t* 关于 `app``和 ``data` 分区的枚举定义。

如果用 C++ 编写，那么指定一个应用程序定义的分区类型，需要在*esp_partition_type_t* 中使用整数，从而与*分区 API* 一起使用。例如:

```
static const esp_partition_type_t APP_PARTITION_TYPE_A = (esp_partition_type_
↪t)0x40;
```

注意，启动加载器将忽略 `app` (0x00) 和 `data` (0x01) 以外的其他分区类型。

SubType 字段

SubType 字段长度为 8 bit，内容与具体分区 Type 有关。目前，esp-idf 仅仅规定了 “app” 和 “data” 两种分区类型的子类型含义。

参考*esp_partition_subtype_t*，以了解 ESP-IDF 定义的全部子类型列表，包括:

- 当 Type 定义为 `app` 时，SubType 字段可以指定为 `factory` (0x00)、`ota_0` (0x10) …`ota_15` (0x1F) 或者 `test` (0x20)。
  - `factory` (0x00) 是默认的 app 分区。启动加载器将默认加载该应用程序。但如果存在类型为 data/ota 分区，则启动加载器将加载 data/ota 分区中的数据，进而判断启动哪个 OTA 镜像文件。
    * OTA 升级永远都不会更新 factory 分区中的内容。
    * 如果您希望在 OTA 项目中预留更多 flash，可以删除 factory 分区，转而使用 ota_0 分区。
  - ota_0 (0x10) …ota_15 (0x1F) 为 OTA 应用程序分区，启动加载器将根据 OTA 数据分区中的数据来决定加载哪个 OTA 应用程序分区中的程序。在使用 OTA 功能时，应用程序应至少拥有 2 个 OTA 应用程序分区（`ota_0` 和 `ota_1`）。更多详细信息，请参考*OTA 文档* 。
  - `test` (0x20) 为预留的子类型，用于工厂测试流程。如果没有其他有效 app 分区，test 将作为备选启动分区使用。也可以配置启动加载器在每次启动时读取 GPIO，如果 GPIO 被拉低则启动该分区。详细信息请查阅*从测试应用程序分区启动*。
- 当 Type 定义为 `data` 时，SubType 字段可以指定为 `ota` (0x00)、`phy` (0x01)、`nvs` (0x02)、`nvs_keys` (0x04) 或者其他组件特定的子类型（请参考*子类型枚举*).
  - `ota` (0) 即*OTA 数据分区* ，用于存储当前所选的 OTA 应用程序的信息。这个分区的大小需要设定为 0x2000。更多详细信息，请参考*OTA 文档* 。
  - `phy` (1) 分区用于存放 PHY 初始化数据，从而保证可以为每个设备单独配置 PHY，而非必须采用固件中的统一 PHY 初始化数据。
    * 默认配置下，phy 分区并不启用，而是直接将 phy 初始化数据编译至应用程序中，从而节省分区表空间（直接将此分区删掉）。

    * 如果需要从此分区加载 phy 初始化数据，请打开项目配置菜单（`idf.py menuconfig`），并且使能*CONFIG_ESP32_PHY_INIT_DATA_IN_PARTITION* 选项。此时，您还需要手动将 phy 初始化数据烧至设备 flash（esp-idf 编译系统并不会自动完成该操作）。
  - `nvs` (2) 是专门给*非易失性存储 (NVS) API* 使用的分区。
    * 用于存储每台设备的 PHY 校准数据（注意，并不是 PHY 初始化数据）。
    * 用于存储 Wi-Fi 数据（如果使用了*esp_wifi_set_storage(WIFI_STORAGE_FLASH)* 初始化函数）。
    * NVS API 还可以用于其他应用程序数据。
    * 强烈建议您应为 NVS 分区分配至少 0x3000 字节空间。
    * 如果使用 NVS API 存储大量数据，请增加 NVS 分区的大小（默认是 0x6000 字节）。
  - `nvs_keys` (4) 是 NVS 秘钥分区。详细信息，请参考*非易失性存储 (NVS) API* 文档。
    * 用于存储加密密钥（如果启用了 *NVS 加密*功能）。
    * 此分区应至少设定为 4096 字节。
  - ESP-IDF 还支持其它预定义的子类型用于数据存储，包括*FAT 文件系统* (`ESP_PARTITION_SUBTYPE_DATA_FAT`)，*SPIFFS* (`ESP_PARTITION_SUBTYPE_DATA_SPIFFS`) 等。

  其它数据子类型已预留给 esp-idf 未来使用。
- 如果分区类型是由应用程序定义的任意值（0x40-0xFE），那么 `subtype` 字段可以是由应用程序选择的任何值（0x00-0xFE）。

请注意如果用 C++ 编写，应用程序定义的子类型值需要转换为`esp_partition_type_t`，从而与*分区 API* 一起使用。

Offset 和 Size 字段

分区若偏移地址为空，则会紧跟着前一个分区之后开始；若为首个分区，则将紧跟着分区表开始。

app 分区的偏移地址必须要与 0x10000 (64K) 对齐，如果将偏移字段留空，`gen_esp32part.py` 工具会自动计算得到一个满足对齐要求的偏移地址。如果 app 分区的偏移地址没有与 0x10000 (64K) 对齐，则该工具会报错。

app 分区的大小和偏移地址可以采用十进制数、以 0x 为前缀的十六进制数，且支持 K 或 M 的倍数单位（分别代表 1024 和 1024*1024 字节）。

如果您希望允许分区表中的分区采用任意起始偏移量 (*CONFIG_PARTITION_TABLE_OFFSET*)，请将分区表（CSV 文件）中所有分区的偏移字段都留空。注意，此时，如果您更改了分区表中任意分区的偏移地址，则其他分区的偏移地址也会跟着改变。这种情况下，如果您之前还曾设定某个分区采用固定偏移地址，则可能造成分区表冲突，从而导致报错。

Flags 字段

当前仅支持 `encrypted` 标记。如果 Flags 字段设置为 `encrypted`，且已启用*Flash 加密* 功能，则该分区将会被加密。

注解： `app` 分区始终会被加密，不管 Flags 字段是否设置。

4.24.4 生成二进制分区表

烧写到 ESP32 中的分区表采用二进制格式，而不是 CSV 文件本身。此时，partition_table/gen_esp32part.py 工具可以实现 CSV 和二进制文件之间的转换。

如果您在项目配置菜单（`idf.py menuconfig`）中设置了分区表 CSV 文件的名称，然后构建项目或执行 `idf.py partition_table`。这时，转换将在编译过程中自动完成。

手动将 CSV 文件转换为二进制文件:

```
python gen_esp32part.py input_partitions.csv binary_partitions.bin
```

手动将二进制文件转换为 CSV 文件:

```
python gen_esp32part.py binary_partitions.bin input_partitions.csv
```

在标准输出（stdout）上，打印二进制分区表的内容（运行 `idf.py partition_table` 时展示的信息摘要也是这样生成的）：

```
python gen_esp32part.py binary_partitions.bin
```

MD5 校验和

二进制格式的分区表中含有一个 MD5 校验和。这个 MD5 校验和是根据分区表内容计算的，可在设备启动阶段，用于验证分区表的完整性。

用户可通过 `gen_esp32part.py` 的 `--disable-md5sum` 选项或者*CONFIG_PARTITION_TABLE_MD5* 选项关闭 MD5 校验。对于*ESP-IDF v3.1 版本前的引导加载程序*，因为它不支持 MD5 校验，所以无法正常启动并报错 `invalid magic number 0xebeb`，此时用户可以使用此选项关闭 MD5 校验。

4.24.5 烧写分区表

- `idf.py partition_table-flash`：使用 esptool.py 工具烧写分区表。
- `idf.py flash`：会烧写所有内容，包括分区表。

在执行 `idf.py partition_table` 命令时，手动烧写分区表的命令也将打印在终端上。

注解： 分区表的更新并不会擦除根据旧分区表存储的数据。此时，您可以使用 `idf.py erase_flash` 命令或者 `esptool.py erase_flash` 命令来擦除 flash 中的所有内容。

4.24.6 分区工具 (parttool.py)

partition_table 组件中有分区工具 parttool.py，可以在目标设备上完成分区相关操作。该工具有如下用途：

- 读取分区，将内容存储到文件中 (read_partition)
- 将文件中的内容写至分区 (write_partition)
- 擦除分区 (erase_partition)
- 检索特定分区的名称、偏移、大小和 flag（“加密”）标志等信息 (get_partition_info)

用户若想通过编程方式完成相关操作，可从另一个 Python 脚本导入并使用分区工具，或者从 Shell 脚本调用分区工具。前者可使用工具的 Python API，后者可使用命令行界面。

Python API

首先请确保已导入 *parttool* 模块。

```
import sys
import os

idf_path = os.environ["IDF_PATH"]  # 从环境中获取 IDF_PATH 的值
parttool_dir = os.path.join(idf_path, "components", "partition_table")  # parttool.
↪py 位于 $IDF_PATH/components/partition_table 下

sys.path.append(parttool_dir)  # 使能 Python 寻找 parttool 模块
from parttool import *  # 导入 parttool 模块内的所有名称
```

要使用分区工具的 Python API，第一步是创建 *ParttoolTarget*：

```
# 创建 partool.py 的目标设备，并将目标设备连接到串行端口 /dev/ttyUSB1
target = ParttoolTarget("/dev/ttyUSB1")
```

现在，可使用创建的 *ParttoolTarget* 在目标设备上完成操作：

```
# 擦除名为 'storage' 的分区
target.erase_partition(PartitionName("storage"))

# 读取类型为 'data'、子类型为 'spiffs' 的分区，保存至文件 'spiffs.bin'
target.read_partition(PartitionType("data", "spiffs"), "spiffs.bin")

# 将 'factory.bin' 文件的内容写至 'factory' 分区
target.write_partition(PartitionName("factory"), "factory.bin")

# 打印默认启动分区的大小
storage = target.get_partition_info(PARTITION_BOOT_DEFAULT)
print(storage.size)
```

使用 *PartitionName*、*PartitionType* 或 PARTITION_BOOT_DEFAULT 指定要操作的分区。顾名思义，这三个参数可以指向拥有特定名称的分区、特定类型和子类型的分区或默认启动分区。

更多关于 Python API 的信息，请查看分区工具的代码注释。

命令行界面

parttool.py 的命令行界面具有如下结构：

```
parttool.py [command-args] [subcommand] [subcommand-args]

- command-args - 执行主命令 (parttool.py) 所需的实际参数，多与目标设备有关
- subcommand - 要执行的操作
- subcommand-args - 所选操作的实际参数
```

```
# 擦除名为 'storage' 的分区
parttool.py --port "/dev/ttyUSB1" erase_partition --partition-name=storage

# 读取类型为 'data'、子类型为 'spiffs' 的分区，保存到 'spiffs.bin' 文件
parttool.py --port "/dev/ttyUSB1" read_partition --partition-type=data --partition-
↪subtype=spiffs --output "spiffs.bin"

# 将 'factory.bin' 文件中的内容写入到 'factory' 分区
parttool.py --port "/dev/ttyUSB1" write_partition --partition-name=factory --input
↪"factory.bin"

# 打印默认启动分区的大小
parttool.py --port "/dev/ttyUSB1" get_partition_info --partition-boot-default --
↪info size
```

更多信息可用 *–help* 指令查看：

```
# 显示可用的子命令和主命令描述
parttool.py --help

# 显示子命令的描述
parttool.py [subcommand] --help
```

4.25 ESP32 ROM console

When an ESP32 is unable to boot from flash ROM (and the fuse disabling it hasn't been blown), it boots into a rom console. The console is based on TinyBasic, and statements entered should be in the form of BASIC statements. As is common in the BASIC language, without a preceeding line number, commands entered are executed immediately; lines with a prefixed line number are stored as part of a program.

4.25.1 Full list of supported statements and functions

System

- BYE - *exits Basic, reboots and retries booting from flash*
- END - *stops execution from the program, also "STOP"*
- MEM - *displays memory usage statistics*
- NEW - *clears the current program*
- RUN - *executes the current program*

IO, Documentation

- PEEK(address) - *get a 32-bit value from a memory address*
- POKE - *write a 32-bit value to memory*
- USR(addr, arg1, ..) - *Execute a machine language function*
- PRINT expression - *print out the expression, also "?"*
- PHEX expression - *print expression as a hex number*
- REM stuff - *remark/comment, also "'"*

Expressions, Math

- A=V, LET A=V - *assign value to a variable*
- +, -, *, / - *Math*
- <,<=,=,<>,!=,>=,> - *Comparisons*
- ABS(expression) - *returns the absolute value of the expression*
- RSEED(v) - *sets the random seed to v*
- RND(m) - *returns a random number from 0 to m*
- A=1234 - * Assign a decimal value*
- A=&h1A2 - * Assign a hex value*
- A=&b1001 - *Assign a binary value*

Control

- IF expression statement - *perform statement if expression is true*
- FOR variable = start TO end - *start for block*
- FOR variable = start TO end STEP value - *start for block with step*
- NEXT - *end of for block*
- GOTO linenumber - *continue execution at this line number*
- GOSUB linenumber - *call a subroutine at this line number*
- RETURN - *return from a subroutine*
- DELAY - *Delay a given number of milliseconds*

Pin IO

- IODIR - *Set a GPIO-pin as an output (1) or input (0)*
- IOSET - *Set a GPIO-pin, configured as output, to high (1) or low (0)*
- IOGET - *Get the value of a GPIO-pin*

4.25.2 Example programs

Here are a few example commands and programs to get you started…

Read UART_DATE register of uart0

```
> PHEX PEEK(&h3FF40078)
15122500
```

Set GPIO2 using memory writes to GPIO_OUT_REG

Note: you can do this easier with the IOSET command

```
> POKE &h3FF44004,PEEK(&h3FF44004) OR &b100
```

Get value of GPIO0

```
> IODIR 0,0
> PRINT IOGET(0)
0
```

Blink LED

Hook up an LED between GPIO2 and ground. When running the program, the LED should blink 10 times.

```
10 IODIR 2,1
20 FOR A=1 TO 10
30 IOSET 2,1
40 DELAY 250
50 IOSET 2,0
60 DELAY 250
70 NEXT A
RUN
```

4.25.3 Credits

The ROM console is based on "TinyBasicPlus" by Mike Field and Scott Lawrence, which is based on "68000 TinyBasic" by Gordon Brandly

4.26 RF calibration

ESP32 supports three RF calibration methods during RF initialization:

1. Partial calibration
2. Full calibration
3. No calibration

4.26.1 Partial calibration

During RF initialization, the partial calibration method is used by default for RF calibration. It is done based on the full calibration data which is stored in the NVS. To use this method, please go to `menuconfig` and enable *CONFIG_ESP32_PHY_CALIBRATION_AND_DATA_STORAGE*.

4.26.2 Full calibration

Full calibration is triggered in the follwing conditions:

1. NVS does not exist.
2. The NVS partition to store calibration data is erased.
3. Hardware MAC address is changed.
4. PHY library version is changed.
5. The RF calibration data loaded from the NVS partition is broken.

It takes about 100ms more than partial calibration. If boot duration is not critical, it is suggested to use the full calibration method. To switch to the full calibration method, go to `menuconfig` and disable *CONFIG_ESP32_PHY_CALIBRATION_AND_DATA_STORAGE*. If you use the default method of RF calibration, there are two ways to add the function of triggering full calibration as a last-resort remedy.

1. Erase the NVS partition if you don't mind all of the data stored in the NVS partition is erased. That is indeed the easiest way.
2. Call API `esp_phy_erase_cal_data_in_nvs()` before initializing WiFi and BT/BLE based on some conditions (e.g. an option provided in some diagnostic mode). In this case, only phy namespace of the NVS partition is erased.

4.26.3 No calibration

No calibration method is only used when the device wakes up from deep sleep.

4.26.4 PHY initialization data

The PHY initialization data is used for RF calibration. There are two ways to get the PHY initialization data.

One is the default initialization data which is located in the header file components/esp_wifi/esp32/include/phy_init_data.h.

It is embedded into the application binary after compiling and then stored into read-only memory (DROM). To use the default initialization data, please go to `menuconfig` and disable *CONFIG_ESP32_PHY_INIT_DATA_IN_PARTITION*.

Another is the initialization data which is stored in a partition. When using a custom partition table, make sure that PHY data partition is included (type: *data*, subtype: *phy*). With default partition table, this is done automatically. If initialization data is stored in a partition, it has to be flashed there, otherwise runtime error will occur. To switch to the initialization data stored in a partition, go to `menuconfig` and enable *CONFIG_ESP32_PHY_INIT_DATA_IN_PARTITION*.

4.27 Secure Boot

重要： All references in this document are related to Secure Boot V1 (The AES based Secure Boot Scheme). ESP32 Revision 3 onwards, the preferred secure boot scheme is *Secure Boot V2*. Please refer to Secure Boot V2 document for ESP32 Revision 3 or ESP32-S2.

Secure Boot is a feature for ensuring only your code can run on the chip. Data loaded from flash is verified on each reset.

Secure Boot is separate from the *Flash Encryption* feature, and you can use secure boot without encrypting the flash contents. However, for a secure environment both should be used simultaneously. See *Secure Boot & Flash Encryption* for more details.

重要： Enabling secure boot limits your options for further updates of your ESP32. Make sure to read this document throughly and understand the implications of enabling secure boot.

4.27.1 Background

- Most data is stored in flash. Flash access does not need to be protected from physical access in order for secure boot to function, because critical data is stored (non-software-accessible) in Efuses internal to the chip.
- Efuses are used to store the secure bootloader key (in efuse BLOCK2), and also a single Efuse bit (ABS_DONE_0) is burned (written to 1) to permanently enable secure boot on the chip. For more details on eFuses, see *ESP32 Technical Reference Manual > eFuse Controller (eFuse)* [PDF].
- To understand the secure boot process, first familiarise yourself with the standard *ESP-IDF boot process*.
- Both stages of the boot process (initial software bootloader load, and subsequent partition & app loading) are verified by the secure boot process, in a "chain of trust" relationship.

4.27.2 Secure Boot Process Overview

This is a high level overview of the secure boot process. Step by step instructions are supplied under *How To Enable Secure Boot*. Further in-depth details are supplied under *Technical Details*:

1. The options to enable secure boot are provided in the *Project Configuration Menu*, under "Secure Boot Configuration".
2. Secure Boot defaults to signing images and partition table data during the build process. The "Secure boot private signing key" config item is a file path to a ECDSA public/private key pair in a PEM format file.
3. The software bootloader image is built by esp-idf with secure boot support enabled and the public key (signature verification) portion of the secure boot signing key compiled in. This software bootloader image is flashed at offset 0x1000.
4. On first boot, the software bootloader follows the following process to enable secure boot:
   - Hardware secure boot support generates a device secure bootloader key (generated via hardware RNG, then stored read/write protected in efuse), and a secure digest. The digest is derived from the key, an IV, and the bootloader image contents.
   - The secure digest is flashed at offset 0x0 in the flash.
   - Depending on Secure Boot Configuration, efuses are burned to disable JTAG and the ROM BASIC interpreter (it is strongly recommended these options are turned on.)
   - Bootloader permanently enables secure boot by burning the ABS_DONE_0 efuse. The software bootloader then becomes protected (the chip will only boot a bootloader image if the digest matches.)
5. On subsequent boots the ROM bootloader sees that the secure boot efuse is burned, reads the saved digest at 0x0 and uses hardware secure boot support to compare it with a newly calculated digest. If the digest does not match then booting will not continue. The digest and comparison are performed entirely by hardware, and the calculated digest is not readable by software. For technical details see *Secure Boot Hardware Support*.
6. When running in secure boot mode, the software bootloader uses the secure boot signing key (the public key of which is embedded in the bootloader itself, and therefore validated as part of the bootloader) to verify the signature appended to all subsequent partition tables and app images before they are booted.

4.27.3 Keys

The following keys are used by the secure boot process:

- "secure bootloader key" is a 256-bit AES key that is stored in Efuse block 2. The bootloader can generate this key itself from the internal hardware random number generator, the user does not need to supply it (it is optionally possible to supply this key, see *Re-Flashable Software Bootloader*). The Efuse holding this key is read & write protected (preventing software access) before secure boot is enabled.
  - By default, the Efuse Block 2 Coding Scheme is "None" and a 256 bit key is stored in this block. On some ESP32s, the Coding Scheme is set to 3/4 Encoding (CODING_SCHEME efuse has value 1) and a 192 bit key must be stored in this block.

For more details, see *ESP32 Technical Reference Manual* > *eFuse Controller (eFuse)* > *System Parameter coding_scheme* [PDF].
The algorithm operates on a 256 bit key in all cases, 192 bit keys are extended by repeating some bits (*details*).

- "secure boot signing key" is a standard ECDSA public/private key pair (see *Image Signing Algorithm*) in PEM format.
  - The public key from this key pair (for signature verification but not signature creation) is compiled into the software bootloader and used to verify the second stage of booting (partition table, app image) before booting continues. The public key can be freely distributed, it does not need to be kept secret.
  - The private key from this key pair *must be securely kept private*, as anyone who has this key can authenticate to any bootloader that is configured with secure boot and the matching public key.

4.27.4 Bootloader Size

Enabling Secure boot and/or flash encryption will increase the size of bootloader, which might require updating partition table offset. See secure-boot-bootloader-size.

4.27.5 How To Enable Secure Boot

1. Open the *Project Configuration Menu*, navigate to "Secure Boot Configuration" and select the option "One-time Flash". (To understand the alternative "Reflashable" choice, see *Re-Flashable Software Bootloader*.)
2. Select a name for the secure boot signing key. This option will appear after secure boot is enabled. The file can be anywhere on your system. A relative path will be evaluated from the project directory. The file does not need to exist yet.
3. Set other menuconfig options (as desired). Pay particular attention to the "Bootloader Config" options, as you can only flash the bootloader once. Then exit menuconfig and save your configuration
4. The first time you run `make`, if the signing key is not found then an error message will be printed with a command to generate a signing key via `espsecure.py generate_signing_key`.

重要: A signing key generated this way will use the best random number source available to the OS and its Python installation (*/dev/urandom* on OSX/Linux and *CryptGenRandom()* on Windows). If this random number source is weak, then the private key will be weak.

重要: For production environments, we recommend generating the keypair using openssl or another industry standard encryption program. See *Generating Secure Boot Signing Key* for more details.

---

5. Run `idf.py bootloader` to build a secure boot enabled bootloader. The build output will include a prompt for a flashing command, using `esptool.py write_flash`.
6. When you're ready to flash the bootloader, run the specified command (you have to enter it yourself, this step is not performed by make) and then wait for flashing to complete. **Remember this is a one time flash, you can't change the bootloader after this!**.
7. Run `idf.py flash` to build and flash the partition table and the just-built app image. The app image will be signed using the signing key you generated in step 4.

注解: `idf.py flash` doesn't flash the bootloader if secure boot is enabled.

---

8. Reset the ESP32 and it will boot the software bootloader you flashed. The software bootloader will enable secure boot on the chip, and then it verifies the app image signature and boots the app. You should watch the serial console output from the ESP32 to verify that secure boot is enabled and no errors have occurred due to the build configuration.

注解： Secure boot won't be enabled until after a valid partition table and app image have been flashed. This is to prevent accidents before the system is fully configured.

注解： If the ESP32 is reset or powered down during the first boot, it will start the process again on the next boot.

9. On subsequent boots, the secure boot hardware will verify the software bootloader has not changed (using the secure bootloader key) and then the software bootloader will verify the signed partition table and app image (using the public key portion of the secure boot signing key).

4.27.6 Re-Flashable Software Bootloader

Configuration "Secure Boot: One-Time Flash" is the recommended configuration for production devices. In this mode, each device gets a unique key that is never stored outside the device.

However, an alternative mode *Secure Boot: Reflashable* is also available. This mode allows you to supply a binary key file that is used for the secure bootloader key. As you have the key file, you can generate new bootloader images and secure boot digests for them.

In the esp-idf build process, this 256-bit key file is derived from the ECDSA app signing key generated by the user (see the *Generating Secure Boot Signing Key* step below). This private key's SHA-256 digest is used as the secure bootloader key in efuse (as-is for Coding Scheme None, or truncate to 192 bytes for 3/4 Encoding). This is a convenience so you only need to generate/protect a single private key.

注解： Although it's possible, we strongly recommend not generating one secure boot key and flashing it to every device in a production environment. The "One-Time Flash" option is recommended for production environments.

To enable a reflashable bootloader:

1. In the *Project Configuration Menu*, select "Bootloader Config" -> *CONFIG_SECURE_BOOT* -> CONFIG_SECURE_BOOT_V1_ENABLED -> *CONFIG_SECURE_BOOTLOADER_MODE* -> Reflashable.
2. If necessary, set the *CONFIG_SECURE_BOOTLOADER_KEY_ENCODING* based on the coding scheme used by the device. The coding scheme is shown in the `Features` line when `esptool.py` connects to the chip, or in the `espefuse.py summary` output.

2. Follow the steps shown above to choose a signing key file, and generate the key file.
3. Run `idf.py bootloader`. A binary key file will be created, derived from the private key that is used for signing. Two sets of flashing steps will be printed - the first set of steps includes an `espefuse.py burn_key secure_boot_v1 path_to/secure-bootloader-key-xxx.bin` command which is used to write the bootloader key to efuse. (Flashing this key is a one-time-only process.) The second set of steps can be used to reflash the bootloader with a pre-calculated digest (generated during the build process).
4. Resume from *Step 6 of the one-time flashing process*, to flash the bootloader and enable secure boot. Watch the console log output closely to ensure there were no errors in the secure boot configuration.

4.27.7 Generating Secure Boot Signing Key

The build system will prompt you with a command to generate a new signing key via `espsecure.py generate_signing_key`. This uses the python-ecdsa library, which in turn uses Python's os.urandom() as a random number source.

The strength of the signing key is proportional to (a) the random number source of the system, and (b) the correctness of the algorithm used. For production devices, we recommend generating signing keys from a system with a quality entropy source, and using the best available EC key generation utilities.

For example, to generate a signing key using the openssl command line:

` openssl ecparam -name prime256v1 -genkey -noout -out my_secure_boot_signing_key.pem `

Remember that the strength of the secure boot system depends on keeping the signing key private.

4.27.8 Remote Signing of Images

For production builds, it can be good practice to use a remote signing server rather than have the signing key on the build machine (which is the default esp-idf secure boot configuration). The espsecure.py command line program can be used to sign app images & partition table data for secure boot, on a remote system.

To use remote signing, disable the option "Sign binaries during build". The private signing key does not need to be present on the build system. However, the public (signature verification) key is required because it is compiled into the bootloader (and can be used to verify image signatures during OTA updates.

To extract the public key from the private key:

```
espsecure.py extract_public_key --keyfile PRIVATE_SIGNING_KEY PUBLIC_VERIFICATION_
↪KEY
```

The path to the public signature verification key needs to be specified in the menuconfig under "Secure boot public signature verification key" in order to build the secure bootloader.

After the app image and partition table are built, the build system will print signing steps using espsecure.py:

```
espsecure.py sign_data --keyfile PRIVATE_SIGNING_KEY BINARY_FILE
```

The above command appends the image signature to the existing binary. You can use the *–output* argument to write the signed binary to a separate file:

```
espsecure.py sign_data --keyfile PRIVATE_SIGNING_KEY --output SIGNED_BINARY_FILE␣
↪BINARY_FILE
```

4.27.9 Secure Boot Best Practices

- Generate the signing key on a system with a quality source of entropy.
- Keep the signing key private at all times. A leak of this key will compromise the secure boot system.
- Do not allow any third party to observe any aspects of the key generation or signing process using espsecure.py. Both processes are vulnerable to timing or other side-channel attacks.
- Enable all secure boot options in the Secure Boot Configuration. These include flash encryption, disabling of JTAG, disabling BASIC ROM interpeter, and disabling the UART bootloader encrypted flash access.
- Use secure boot in combination with *flash encryption* to prevent local readout of the flash contents.

4.27.10 Technical Details

The following sections contain low-level reference descriptions of various secure boot elements:

Secure Boot Hardware Support

The first stage of secure boot verification (checking the software bootloader) is done via hardware. The ESP32's Secure Boot support hardware can perform three basic operations:

1. Generate a random sequence of bytes from a hardware random number generator.
2. Generate a digest from data (usually the bootloader image from flash) using a key stored in Efuse block 2. The key in Efuse can (& should) be read/write protected, which prevents software access. For full details of this algorithm see *Secure Bootloader Digest Algorithm*. The digest can only be read back by software if Efuse ABS_DONE_0 is *not* burned (ie still 0).

3. Generate a digest from data (usually the bootloader image from flash) using the same algorithm as step 2 and compare it to a pre-calculated digest supplied in a buffer (usually read from flash offset 0x0). The hardware returns a true/false comparison without making the digest available to software. This function is available even when Efuse ABS_DONE_0 is burned.

Secure Bootloader Digest Algorithm

Starting with an "image" of binary data as input, this algorithm generates a digest as output. The digest is sometimes referred to as an "abstract" in hardware documentation.

For a Python version of this algorithm, see the `espsecure.py` tool in the components/esptool_py directory (specifically, the `digest_secure_bootloader` command).

Items marked with (^) are to fulfill hardware restrictions, as opposed to cryptographic restrictions.

1. Read the AES key from efuse block 2, in reversed byte order. If Coding Scheme is set to 3/4 Encoding, extend the 192 bit key to 256 bits using the same algorithm described in *Flash 加密算法*.
2. Prefix the image with a 128 byte randomly generated IV.
3. If the image length is not modulo 128, pad the image to a 128 byte boundary with 0xFF. (^)
4. For each 16 byte plaintext block of the input image: - Reverse the byte order of the plaintext input block (^) - Apply AES256 in ECB mode to the plaintext block. - Reverse the byte order of the ciphertext output block. (^) - Append to the overall ciphertext output.
5. Byte-swap each 4 byte word of the ciphertext (^)
6. Calculate SHA-512 of the ciphertext.

Output digest is 192 bytes of data: The 128 byte IV, followed by the 64 byte SHA-512 digest.

Image Signing Algorithm

Deterministic ECDSA as specified by RFC 6979.

- Curve is NIST256p (openssl calls this curve "prime256v1", it is also sometimes called secp256r1).
- Hash function is SHA256.
- Key format used for storage is PEM.
  - In the bootloader, the public key (for signature verification) is flashed as 64 raw bytes.
- Image signature is 68 bytes - a 4 byte version word (currently zero), followed by a 64 bytes of signature data. These 68 bytes are appended to an app image or partition table data.

Manual Commands

Secure boot is integrated into the esp-idf build system, so `make` will automatically sign an app image if secure boot is enabled. `idf.py bootloader` will produce a bootloader digest if menuconfig is configured for it.

However, it is possible to use the `espsecure.py` tool to make standalone signatures and digests.

To sign a binary image:

```
espsecure.py sign_data --keyfile ./my_signing_key.pem --output ./image_signed.bin␣
↪image-unsigned.bin
```

Keyfile is the PEM file containing an ECDSA private signing key.

To generate a bootloader digest:

```
espsecure.py digest_secure_bootloader --keyfile ./securebootkey.bin --output ./
↪bootloader-digest.bin build/bootloader/bootloader.bin
```

Keyfile is the 32 byte raw secure boot key for the device.

The output of the `espsecure.py digest_secure_bootloader` command is a single file which contains both the digest and the bootloader appended to it. To flash the combined digest plus bootloader to the device:

```
esptool.py write_flash 0x0 bootloader-digest.bin
```

4.27.11 Secure Boot & Flash Encryption

If secure boot is used without *Flash Encryption*, it is possible to launch "time-of-check to time-of-use" attack, where flash contents are swapped after the image is verified and running. Therefore, it is recommended to use both the features together.

4.27.12 Signed App Verification Without Hardware Secure Boot

The integrity of apps can be checked even without enabling the hardware secure boot option. This option uses the same app signature scheme as hardware secure boot, but unlike hardware secure boot it does not prevent the bootloader from being physically updated. This means that the device can be secured against remote network access, but not physical access. Compared to using hardware Secure Boot this option is much simpler to implement. See *How To Enable Signed App Verification* for step by step instructions.

An app can be verified on update and, optionally, be verified on boot.

- Verification on update: When enabled, the signature is automatically checked whenever the esp_ota_ops.h APIs are used for OTA updates. If hardware secure boot is enabled, this option is always enabled and cannot be disabled. If hardware secure boot is not enabled, this option still adds significant security against network-based attackers by preventing spoofing of OTA updates.
- Verification on boot: When enabled, the bootloader will be compiled with code to verify that an app is signed before booting it. If hardware secure boot is enabled, this option is always enabled and cannot be disabled. If hardware secure boot is not enabled, this option doesn't add significant security by itself so most users will want to leave it disabled.

How To Enable Signed App Verification

1. Open *Project Configuration Menu* -> Security features -> Enable *CONFIG_SECURE_SIGNED_APPS_NO_SECURE_BOOT*
2. "Bootloader verifies app signatures" can be enabled, which verifies app on boot.
3. By default, "Sign binaries during build" will be enabled on selecting "Require signed app images" option, which will sign binary files as a part of build process. The file named in "Secure boot private signing key" will be used to sign the image.
4. If you disable "Sign binaries during build" option then you'll have to enter path of a public key file used to verify signed images in "Secure boot public signature verification key". In this case, private signing key should be generated by following instructions in *Generating Secure Boot Signing Key*; public verification key and signed image should be generated by following instructions in *Remote Signing of Images*.

4.27.13 Advanced Features

JTAG Debugging

By default, when Secure Boot is enabled then JTAG debugging is disabled via eFuse. The bootloader does this on first boot, at the same time it enables Secure Boot.

See *JTAG 与闪存加密和安全引导* for more information about using JTAG Debugging with either Secure Boot or signed app verification enabled.

4.28 Secure Boot V2

重要： The references in this document are related to Secure Boot V2, the preferred scheme from ESP32 ECO3 onwards, in ESP32-S2, and from ESP32-C3 ECO3 onwards.

Refer also to *Secure Boot* for ESP32.

Secure Boot V2 uses RSA based app and bootloader verification. This document can also be referred for signing apps with the RSA scheme without signing the bootloader.

`Secure Boot V2` and RSA scheme (`App Signing Scheme`) options are available for ESP32 from ECO3 onwards. To get these options visible in the menuconfig set *CONFIG_ESP32_REV_MIN* greater than or equal to *Rev 3*.

4.28.1 Background

Secure Boot protects a device from running unsigned code (verification at time of load). A new RSA based secure boot verification scheme (Secure Boot V2) has been introduced for ESP32-S2, ESP32-C3 ECO3 onwards, and ESP32 ECO3 onwards.

- The software bootloader's RSA-PSS signature is verified by the Mask ROM and it is executed post successful verification.
- The verified software bootloader verifies the RSA-PSS signature of the application image before it is executed.

4.28.2 Advantages

- The RSA public key is stored on the device. The corresponding RSA private key is kept secret on a server and is never accessed by the device.
- Only one public key can be generated and stored in ESP32 ECO3 during manufacturing.
- Same image format & signature verification is applied for applications & software bootloader.
- No secrets are stored on the device. Therefore immune to passive side-channel attacks (timing or power analysis, etc.)

4.28.3 Secure Boot V2 Process

This is an overview of the Secure Boot V2 Process, Step by step instructions are supplied under *How To Enable Secure Boot V2*.

1. Secure Boot V2 verifies the signature blocks appended to the bootloader and application binaries. The signature block contains the image binary signed by a RSA-3072 private key and its corresponding public key. More details on the *Signature Block Format*.
2. On startup, ROM code checks the Secure Boot V2 bit in eFuse.
3. If secure boot is enabled, ROM checks the SHA-256 of the public key in the signature block in the eFuse.
4. The ROM code validates the public key embedded in the software bootloader's signature block by matching the SHA-256 of its public key to the SHA-256 in eFuse as per the earlier step. Boot process will be aborted if a valid hash of the public key isn't found in the eFuse.
5. The ROM code verifies the signature of the bootloader with the pre-validated public key with the RSA-PSS Scheme. In depth information on *Verifying the signature Block*.
6. Software bootloader, reads the app partition and performs similar verification on the application. The application is verified on every boot up and OTA update. If selected OTA app partition fails verification, bootloader will fall back and look for another correctly signed partition.

4.28.4 Signature Block Format

The bootloader and application images are padded to the next 4096 byte boundary, thus the signature has a flash sector of its own. The signature is calculated over all bytes in the image including the padding bytes.

Each signature block contains the following:

- **Offset 0 (1 byte):** Magic byte (0xe7)
- **Offset 1 (1 byte):** Version number byte (currently 0x02), 0x01 is for Secure Boot V1.
- **Offset 2 (2 bytes):** Padding bytes, Reserved. Should be zero.
- **Offset 4 (32 bytes):** SHA-256 hash of only the image content, not including the signature block.
- **Offset 36 (384 bytes):** RSA Public Modulus used for signature verification. (value ‘n’ in RFC8017).
- **Offset 420 (4 bytes):** RSA Public Exponent used for signature verification (value ‘e’ in RFC8017).
- **Offset 424 (384 bytes):** Precalculated R, derived from ‘n’.
- **Offset 808 (4 bytes):** Precalculated M’, derived from ‘n’
- **Offset 812 (384 bytes):** RSA-PSS Signature result (section 8.1.1 of RFC8017) of image content, computed using following PSS parameters: SHA256 hash, MFG1 function, 0 length salt, default trailer field (0xBC).
- **Offset 1196:** CRC32 of the preceding 1095 bytes.
- **Offset 1200 (16 bytes):** Zero padding to length 1216 bytes.

注解： R and M’ are used for hardware-assisted Montgomery Multiplication.

The remainder of the signature sector is erased flash (0xFF) which allows writing other signature blocks after previous signature block.

4.28.5 Verifying the signature Block

A signature block is “valid” if the first byte is 0xe7 and a valid CRC32 is stored at offset 1196.

Only one signature block can be appended to the bootloader or application image in ESP32 ECO3.

An image is “verified” if the public key stored in any signature block is valid for this device, and if the stored signature is valid for the image data read from flash.

1. The magic byte, signature block CRC is validated.
2. Public key digests are generated per signature block and compared with the digests from eFuse. If none of the digests match, the verification process is aborted.
3. The application image digest is generated and matched with the image digest in the signature blocks. The verification process is aborted is the digests don’t match.
4. The public key is used to verify the signature of the bootloader image, using RSA-PSS (section 8.1.2 of RFC8017) with the image digest calculated in step (3) for comparison.

- The application signing scheme is set to RSA for Secure Boot V2 and to ECDSA for Secure Boot V1.

重要： It is recommended to use Secure Boot V2 on the chip versions supporting them.

4.28.6 Bootloader Size

Enabling Secure boot and/or flash encryption will increase the size of bootloader, which might require updating partition table offset. See secure-boot-bootloader-size.

4.28.7 eFuse usage

ESP32-ECO3:

- ABS_DONE_1 - Enables secure boot protection on boot.

- BLK2 - Stores the SHA-256 digest of the public key. SHA-256 hash of public key modulus, exponent, pre-calculated R & M' values (represented as 776 bytes –offsets 36 to 812 - as per the *Signature Block Format*) is written to an eFuse key block. The write-protection bit must be set, but the read-protection bit must not.

The key(s) must be readable in order to give software access to it. If the key(s) is read-protected then the software reads the key(s) as all zeros and the signature verification process occurs with error, bootloader and app can not be run.

4.28.8 How To Enable Secure Boot V2

1. Open the *Project Configuration Menu*, in "Security features" set "Enable hardware Secure Boot in bootloader" to enable Secure Boot.
2. For ESP32, Secure Boot V2 is available only ESP32 ECO3 onwards. To view the "Secure Boot V2" option the chip revision should be changed to revision 3 (ESP32- ECO3). To change the chip revision, set "Minimum Supported ESP32 Revision" to Rev 3 in "Component Config" -> "ESP32- Specific".
3. Specify the path to secure boot signing key, relative to the project directory.
4. Select the desired UART ROM download mode in "UART ROM download mode". By default the UART ROM download mode has been kept enabled in order to prevent permanently disabling it in the development phase, this option is a potentially insecure option. It is recommended to disable the UART download mode for better security.
5. Set other menuconfig options (as desired). Pay particular attention to the "Bootloader Config" options, as you can only flash the bootloader once. Then exit menuconfig and save your configuration.
6. The first time you run `make` or `idf.py build`, if the signing key is not found then an error message will be printed with a command to generate a signing key via `espsecure.py generate_signing_key`.

重要： A signing key generated this way will use the best random number source available to the OS and its Python installation (*/dev/urandom* on OSX/Linux and *CryptGenRandom()* on Windows). If this random number source is weak, then the private key will be weak.

重要： For production environments, we recommend generating the keypair using openssl or another industry standard encryption program. See *Generating Secure Boot Signing Key* for more details.

---

7. Run `idf.py bootloader` to build a secure boot enabled bootloader. The build output will include a prompt for a flashing command, using `esptool.py write_flash`.
8. When you're ready to flash the bootloader, run the specified command (you have to enter it yourself, this step is not performed by the build system) and then wait for flashing to complete.
9. Run `idf.py flash` to build and flash the partition table and the just-built app image. The app image will be signed using the signing key you generated in step 4.

注解： `idf.py flash` doesn't flash the bootloader if secure boot is enabled.

---

10. Reset the ESP32 and it will boot the software bootloader you flashed. The software bootloader will enable secure boot on the chip, and then it verifies the app image signature and boots the app. You should watch the serial console output from the ESP32 to verify that secure boot is enabled and no errors have occurred due to the build configuration.

注解： Secure boot won't be enabled until after a valid partition table and app image have been flashed. This is to prevent accidents before the system is fully configured.

注解： If the ESP32 is reset or powered down during the first boot, it will start the process again on the next boot.

---

11. On subsequent boots, the secure boot hardware will verify the software bootloader has not changed and the software bootloader will verify the signed app image (using the validated public key portion of its appended signature block).

4.28.9 Restrictions after Secure Boot is enabled

- Any updated bootloader or app will need to be signed with a key matching the digest already stored in efuse.
- After Secure Boot is enabled, no further efuses can be read protected. (If *Flash 加密* is enabled then the bootloader will ensure that any flash encryption key generated on first boot will already be read protected.) If *CONFIG_SECURE_BOOT_INSECURE* is enabled then this behaviour can be disabled, but this is not recommended.

4.28.10 Generating Secure Boot Signing Key

The build system will prompt you with a command to generate a new signing key via `espsecure.py generate_signing_key`. The –version 2 parameter will generate the RSA 3072 private key for Secure Boot V2.

The strength of the signing key is proportional to (a) the random number source of the system, and (b) the correctness of the algorithm used. For production devices, we recommend generating signing keys from a system with a quality entropy source, and using the best available RSA key generation utilities.

For example, to generate a signing key using the openssl command line:

```
` openssl genrsa -out my_secure_boot_signing_key.pem 3072 `
```

Remember that the strength of the secure boot system depends on keeping the signing key private.

4.28.11 Remote Signing of Images

For production builds, it can be good practice to use a remote signing server rather than have the signing key on the build machine (which is the default esp-idf secure boot configuration). The espsecure.py command line program can be used to sign app images & partition table data for secure boot, on a remote system.

To use remote signing, disable the option "Sign binaries during build". The private signing key does not need to be present on the build system.

After the app image and partition table are built, the build system will print signing steps using espsecure.py:

```
espsecure.py sign_data --version 2 --keyfile PRIVATE_SIGNING_KEY BINARY_FILE
```

The above command appends the image signature to the existing binary. You can use the *–output* argument to write the signed binary to a separate file:

```
espsecure.py sign_data --version 2 --keyfile PRIVATE_SIGNING_KEY --output SIGNED_
↪BINARY_FILE BINARY_FILE
```

4.28.12 Secure Boot Best Practices

- Generate the signing key on a system with a quality source of entropy.
- Keep the signing key private at all times. A leak of this key will compromise the secure boot system.
- Do not allow any third party to observe any aspects of the key generation or signing process using espsecure.py. Both processes are vulnerable to timing or other side-channel attacks.
- Enable all secure boot options in the Secure Boot Configuration. These include flash encryption, disabling of JTAG, disabling BASIC ROM interpeter, and disabling the UART bootloader encrypted flash access.
- Use secure boot in combination with *flash encryption* to prevent local readout of the flash contents.

4.28.13 Technical Details

The following sections contain low-level reference descriptions of various secure boot elements:

Manual Commands

Secure boot is integrated into the esp-idf build system, so `make` or `idf.py build` will sign an app image and `idf.py bootloader` will produce a signed bootloader if secure signed binaries on build is enabled.

However, it is possible to use the `espsecure.py` tool to make standalone signatures and digests.

To sign a binary image:

```
espsecure.py sign_data --version 2 --keyfile ./my_signing_key.pem --output ./image_
↪signed.bin image-unsigned.bin
```

Keyfile is the PEM file containing an RSA-3072 private signing key.

4.28.14 Secure Boot & Flash Encryption

If secure boot is used without *Flash Encryption*, it is possible to launch "time-of-check to time-of-use" attack, where flash contents are swapped after the image is verified and running. Therefore, it is recommended to use both the features together.

4.28.15 Signed App Verification Without Hardware Secure Boot

The Secure Boot V2 signature of apps can be checked on OTA update, without enabling the hardware secure boot option. This option uses the same app signature scheme as Secure Boot V2, but unlike hardware secure boot it does not prevent an attacker who can write to flash from bypassing the signature protection.

This may be desirable in cases where the delay of Secure Boot verification on startup is unacceptable, and/or where the threat model does not include physical access or attackers writing to bootloader or app partitions in flash.

In this mode, the public key which is present in the signature block of the currently running app will be used to verify the signature of a newly updated app. (The signature on the running app isn't verified during the update process, it's assumed to be valid.) In this way the system creates a chain of trust from the running app to the newly updated app.

For this reason, it's essential that the initial app flashed to the device is also signed. A check is run on app startup and the app will abort if no signatures are found. This is to try and prevent a situation where no update is possible. The app should have only one valid signature block in the first position. Note again that, unlike hardware Secure Boot V2, the signature of the running app isn't verified on boot. The system only verifies a signature block in the first position and ignores any other appended signatures.

only:: not esp32

> Although multiple trusted keys are supported when using hardware Secure Boot, only the first public key in the signature block is used to verify updates if signature checking without Secure Boot is configured. If multiple trusted public keys are required, it's necessary to enable the full Secure Boot feature instead.

注解: In general, it's recommended to use full hardware Secure Boot unless certain that this option is sufficient for application security needs.

How To Enable Signed App Verification

1. Open *Project Configuration Menu* -> Security features
2. Ensure *App Signing Scheme* is *RSA*. For ESP32 ECO3 chip, select *CONFIG_ESP32_REV_MIN* to *Rev 3* to get *RSA* option available

3. Enable *CONFIG_SECURE_SIGNED_APPS_NO_SECURE_BOOT*
4. By default, "Sign binaries during build" will be enabled on selecting "Require signed app images" option, which will sign binary files as a part of build process. The file named in "Secure boot private signing key" will be used to sign the image.
5. If you disable "Sign binaries during build" option then all app binaries must be manually signed by following instructions in *Remote Signing of Images*.

警告： It is very important that all apps flashed have been signed, either during the build or after the build.

4.28.16 Advanced Features

JTAG Debugging

By default, when Secure Boot is enabled then JTAG debugging is disabled via eFuse. The bootloader does this on first boot, at the same time it enables Secure Boot.

See *JTAG 与闪存加密和安全引导* for more information about using JTAG Debugging with either Secure Boot or signed app verification enabled.

4.29 Thread Local Storage

4.29.1 Overview

Thread-local storage (TLS) is a mechanism by which variables are allocated such that there is one instance of the variable per extant thread. ESP-IDF provides three ways to make use of such variables:

- *FreeRTOS Native API*: ESP-IDF FreeRTOS native API.
- *Pthread API*: ESP-IDF's pthread API.
- *C11 Standard*: C11 standard introduces special keyword to declare variables as thread local.

4.29.2 FreeRTOS Native API

The ESP-IDF FreeRTOS provides the following API to manage thread local variables:

- *vTaskSetThreadLocalStoragePointer()*
- *pvTaskGetThreadLocalStoragePointer()*
- *vTaskSetThreadLocalStoragePointerAndDelCallback()*

In this case maximum number of variables that can be allocated is limited by `configNUM_THREAD_LOCAL_STORAGE_POINTERS` macro. Variables are kept in the task control block (TCB) and accessed by their index. Note that index 0 is reserved for ESP-IDF internal uses. Using that API user can allocate thread local variables of an arbitrary size and assign them to any number of tasks. Different tasks can have different sets of TLS variables. If size of the variable is more then 4 bytes then user is responsible for allocating/deallocating memory for it. Variable's deallocation is initiated by FreeRTOS when task is deleted, but user must provide function (callback) to do proper cleanup.

4.29.3 Pthread API

The ESP-IDF provides the following pthread API to manage thtread local variables:

- `pthread_key_create()`
- `pthread_key_delete()`
- `pthread_getspecific()`
- `pthread_setspecific()`

This API has all benefits of the one above, but eliminates some its limits. The number of variables is limited only by size of available memory on the heap. Due to the dynamic nature this API introduces additional performance overhead compared to the native one.

4.29.4 C11 Standard

The ESP-IDF FreeRTOS supports thread local variables according to C11 standard (ones specified with `__thread` keyword). For details on this GCC feature please see https://gcc.gnu.org/onlinedocs/gcc-5.5.0/gcc/Thread-Local.html#Thread-Local. Storage for that kind of variables is allocated on the task's stack. Note that area for all such variables in the program will be allocated on the stack of every task in the system even if that task does not use such variables at all. For example ESP-IDF system tasks (like `ipc`, `timer` tasks etc.) will also have that extra stack space allocated. So this feature should be used with care. There is a tradeoff: C11 thread local variables are quite handy to use in programming and can be accessed using just a few Xtensa instructions, but this benefit goes with the cost of additional stack usage for all tasks in the system. Due to static nature of variables allocation all tasks in the system have the same sets of C11 thread local variables.

4.30 工具

4.30.1 Downloadable Tools

ESP-IDF build process relies on a number of tools: cross-compiler toolchains, CMake build system, and others.

Installing the tools using an OS-specific package manager (like apt, yum, brew, etc.) is the preferred method when the required version of the tool is available. This recommendation is reflected in the Getting Started guide. For example, on Linux and macOS it is recommended to install CMake using an OS package manager.

However, some of the tools are IDF-specific and are not available in OS package repositories. Furthermore, different versions of ESP-IDF require different versions of the tools to operate correctly. To solve these two problems, ESP-IDF provides a set of scripts for downloading and installing the correct versions of tools, and exposing them in the environment.

The rest of the document refers to these downloadable tools simply as "tools". Other kinds of tools used in ESP-IDF are:

- Python scripts bundled with ESP-IDF (such as `idf.py`)
- Python packages installed from PyPI.

The following sections explain the installation method, and provide the list of tools installed on each platform.

注解: This document is provided for advanced users who need to customize their installation, users who wish to understand the installation process, and ESP-IDF developers.

If you are looking for instructions on how to install the tools, see the *Getting Started Guide*.

Tools metadata file

The list of tools and tool versions required for each platform is located in tools/tools.json. The schema of this file is defined by tools/tools_schema.json.

This file is used by tools/idf_tools.py script when installing the tools or setting up the environment variables.

Tools installation directory

`IDF_TOOLS_PATH` environment variable specifies the location where the tools are to be downloaded and installed. If not set, `IDF_TOOLS_PATH` defaults to `HOME/.espressif` on Linux and macOS, and `%USER_PROFILE%\.espressif` on Windows.

Inside IDF_TOOLS_PATH, the scripts performing tools installation create the following directories:

- dist —where the archives of the tools are downloaded.
- tools —where the tools are extracted. The tools are extracted into subdirectories: tools/TOOL_NAME/VERSION/. This arrangement allows different versions of tools to be installed side by side.

GitHub Assets Mirror

Most of the tools downloaded by the tools installer are GitHub Release Assets, which are files attached to a software release on GitHub.

If GitHub downloads are inaccessible or slow to access, it's possible to configure a GitHub assets mirror.

To use Espressif's download server, set the environment variable IDF_GITHUB_ASSETS to dl.espressif.com/github_assets. When the install process is downloading a tool from github.com, the URL will be rewritten to use this server instead.

Any mirror server can be used provided the URL matches the github.com download URL format: the install process will replace https://github.com with https://${IDF_GITHUB_ASSETS} for any GitHub asset URL that it downloads.

注解: The Espressif download server doesn't currently mirror everything from GitHub, it only mirrors files attached as Assets to some releases as well as source archives for some releases.

---

idf_tools.py script

tools/idf_tools.py script bundled with ESP-IDF performs several functions:

- install: Download the tool into ${IDF_TOOLS_PATH}/dist directory, extract it into ${IDF_TOOLS_PATH}/tools/TOOL_NAME/VERSION.
  install command accepts the list of tools to install, in TOOL_NAME or TOOL_NAME@VERSION format. If all is given, all the tools (required and optional ones) are installed. If no argument or required is given, only the required tools are installed.
- download: Similar to install but doesn't extract the tools. An optional --platform argument may be used to download the tools for the specific platform.
- export: Lists the environment variables which need to be set to use the installed tools. For most of the tools, setting PATH environment variable is sufficient, but some tools require extra environment variables.
  The environment variables can be listed in either of shell or key-value formats, set by --format parameter:
  - shell produces output suitable for evaluation in the shell. For example,

    ```
    export PATH="/home/user/.espressif/tools/tool/v1.0.0/bin:$PATH"
    ```

    on Linux and macOS, and

    ```
    set "PATH=C:\Users\user\.espressif\tools\v1.0.0\bin;%PATH%"
    ```

    on Windows.

    注解: Exporting environment variables in Powershell format is not supported at the moment. key-value format may be used instead.

    The output of this command may be used to update the environment variables, if the shell supports this. For example:

    ```
    eval $($IDF_PATH/tools/idf_tools.py export)
    ```

  - key-value produces output in *VARIABLE*=*VALUE* format, suitable for parsing by other scripts:

```
PATH=/home/user/.espressif/tools/tool/v1.0.0:$PATH
```

Note that the script consuming this output has to perform expansion of `$VAR` or `%VAR%` patterns found in the output.

- `list`: Lists the known versions of the tools, and indicates which ones are installed.
- `check`: For each tool, checks whether the tool is available in the system path and in `IDF_TOOLS_PATH`.

Install scripts

Shell-specific user-facing scripts are provided in the root of ESP-IDF repository to facilitate tools installation. These are:

- `install.bat` for Windows Command Prompt
- `install.ps1` for Powershell
- `install.sh` for Bash

Aside from downloading and installing the tools into `IDF_TOOLS_PATH`, these scripts prepare a Python virtual environment, and install the required packages into that environment.

Export scripts

Since the installed tools are not permanently added into the user or system `PATH` environment variable, an extra step is required to use them in the command line. The following scripts modify the environment variables in the current shell to make the correct versions of the tools available:

- `export.bat` for Windows Command Prompt
- `export.ps1` for Powershell
- `export.sh` for Bash

注解： To modify the shell environment in Bash, `export.sh` must be "sourced" : `. ./export.sh` (note the leading dot and space).

`export.sh` may be used with shells other than Bash (such as zsh). However in this case the `IDF_PATH` environment variable must be set before running the script. When used in Bash, the script will guess the `IDF_PATH` value from its own location.

In addition to calling `idf_tools.py`, these scripts list the directories which have been added to the `PATH`.

Other installation methods

Depending on the environment, more user-friendly wrappers for `idf_tools.py` are provided:

- *IDF Tools installer for Windows* can download and install the tools. Internally the installer uses `idf_tools.py`.
- *Eclipse plugin for ESP-IDF* includes a menu item to set up the tools. Internally the plugin calls `idf_tools.py`.
- Visual Studio Code extension for ESP-IDF includes an onboarding flow. This flow helps setting up the tools. Although the extension does not rely on `idf_tools.py`, the same installation method is used.

Custom installation

Although the methods above are recommended for ESP-IDF users, they are not a must for building ESP-IDF applications. ESP-IDF build system expects that all the necessary tools are installed somewhere, and made available in the `PATH`.

List of IDF Tools

xtensa-esp32-elf Toolchain for Xtensa (ESP32) based on GCC

License: GPL-3.0-with-GCC-exception

More info: https://github.com/espressif/crosstool-NG

Platform	Required	Download
linux-amd64	required	https://github.com/espressif/crosstool-NG/releases/download/esp-2021r2-patch3/xtensa-esp32-elf-gcc8_4_0-esp-2021r2-patch3-linux-amd64.tar.gz SHA256: 9edd1e77627688f435561922d14299f6a0021ba1f6ff67e472e1108695a69e53
linux-arm64	required	https://github.com/espressif/crosstool-NG/releases/download/esp-2021r2-patch3/xtensa-esp32-elf-gcc8_4_0-esp-2021r2-patch3-linux-arm64.tar.gz SHA256: 3a21a3e310e6b1e7d7bed1f3e59698a5bd29ed3a5ca79fba9265d7dd2f1e0cd2
linux-armel	required	https://github.com/espressif/crosstool-NG/releases/download/esp-2021r2-patch3/xtensa-esp32-elf-gcc8_4_0-esp-2021r2-patch3-linux-armel.tar.gz SHA256: 89313c4c1d8db1b01624f31b58bf3fbe527160569828ac4301e9daa75c52716d
linux-armhf	required	https://github.com/espressif/crosstool-NG/releases/download/esp-2021r2-patch3/xtensa-esp32-elf-gcc8_4_0-esp-2021r2-patch3-linux-armhf.tar.gz SHA256: ec07a9c75a0aa4b86496cacf2034154cd4a693b6f317c66a4a122c71fd04a518
linux-i686	required	https://github.com/espressif/crosstool-NG/releases/download/esp-2021r2-patch3/xtensa-esp32-elf-gcc8_4_0-esp-2021r2-patch3-linux-i686.tar.gz SHA256: a1f165a836f175daa6fbfde4ca99cb93b377f021fbfc41f79a700bd4df965a9a
macos	required	https://github.com/espressif/crosstool-NG/releases/download/esp-2021r2-patch3/xtensa-esp32-elf-gcc8_4_0-esp-2021r2-patch3-macos.tar.gz SHA256: dda3d7a43efd995d9a51d5a5741626dbf915df46078aef0b5aea7163ac82398b
win32	required	https://github.com/espressif/crosstool-NG/releases/download/esp-2021r2-patch3/xtensa-esp32-elf-gcc8_4_0-esp-2021r2-patch3-win32.zip SHA256: fd147592928ef2d7092ba34b01ecd776fe26ba3d7e3f9b6b215a3b46e981ee2c
win64	required	https://github.com/espressif/crosstool-NG/releases/download/esp-2021r2-patch3/xtensa-esp32-elf-gcc8_4_0-esp-2021r2-patch3-win64.zip SHA256: 9395315c07de0b9f05c9a6616ba1f05e76ab651053f2f40479163a8e03cfa830

xtensa-esp32s2-elf Toolchain for Xtensa (ESP32-S2) based on GCC

License: GPL-3.0-with-GCC-exception

More info: https://github.com/espressif/crosstool-NG

Platform	Required	Download
linux-amd64	required	https://github.com/espressif/crosstool-NG/releases/download/esp-2021r2-patch3/xtensa-esp32s2-elf-gcc8_4_0-esp-2021r2-patch3-linux-amd64.tar.gz SHA256: a32451a8edc1104b83cd9971178e61826e957d7db9ad9f81798a8969fd5a954e
linux-arm64	required	https://github.com/espressif/crosstool-NG/releases/download/esp-2021r2-patch3/xtensa-esp32s2-elf-gcc8_4_0-esp-2021r2-patch3-linux-arm64.tar.gz SHA256: 2ac2c94a533a99a091d2159c678c611c712c494b5f68d97913254712047260f9
linux-armel	required	https://github.com/espressif/crosstool-NG/releases/download/esp-2021r2-patch3/xtensa-esp32s2-elf-gcc8_4_0-esp-2021r2-patch3-linux-armel.tar.gz SHA256: da49afee1e2e03eaab3f492718789442d33b562800e2a892679f95b50be24d14
linux-armhf	required	https://github.com/espressif/crosstool-NG/releases/download/esp-2021r2-patch3/xtensa-esp32s2-elf-gcc8_4_0-esp-2021r2-patch3-linux-armhf.tar.gz SHA256: f2b9b89522f28547c8725a54c4e57e8a35dac56edc26aa8cd607c87a050249ac
linux-i686	required	https://github.com/espressif/crosstool-NG/releases/download/esp-2021r2-patch3/xtensa-esp32s2-elf-gcc8_4_0-esp-2021r2-patch3-linux-i686.tar.gz SHA256: 36d3c4990a5feb68aa8534463bc9e8ee367fe23886f78e1d726f4411c7571462
macos	required	https://github.com/espressif/crosstool-NG/releases/download/esp-2021r2-patch3/xtensa-esp32s2-elf-gcc8_4_0-esp-2021r2-patch3-macos.tar.gz SHA256: de9af641678c93775e932ee5ec4f478f8925cfc1ebc22e41adc4fb85430a0c35
win32	required	https://github.com/espressif/crosstool-NG/releases/download/esp-2021r2-patch3/xtensa-esp32s2-elf-gcc8_4_0-esp-2021r2-patch3-win32.zip SHA256: ccf08afe60046f87b0e81ca17dc5073eda68ab5e7522c163dd5b583d713b7b39
win64	required	https://github.com/espressif/crosstool-NG/releases/download/esp-2021r2-patch3/xtensa-esp32s2-elf-gcc8_4_0-esp-2021r2-patch3-win64.zip SHA256: 37c91490b8fc75e638c23785e261eaf553be2dcd106cf6cff5b76981fa02955b

xtensa-esp32s3-elf Toolchain for Xtensa (ESP32-S3) based on GCC

License: GPL-3.0-with-GCC-exception

More info: https://github.com/espressif/crosstool-NG

Platform	Required	Download
linux-amd64	required	https://github.com/espressif/crosstool-NG/releases/download/esp-2021r2-patch3/xtensa-esp32s3-elf-gcc8_4_0-esp-2021r2-patch3-linux-amd64.tar.gz SHA256: 59b271d014ff3915b6db1b43b610a45eea15fe5d6877d12cae8a191cc996ed37
linux-arm64	required	https://github.com/espressif/crosstool-NG/releases/download/esp-2021r2-patch3/xtensa-esp32s3-elf-gcc8_4_0-esp-2021r2-patch3-linux-arm64.tar.gz SHA256: 7051b32483e61f98606d71c98e372929428a5165df791dcd5830ed9517763152
linux-armel	required	https://github.com/espressif/crosstool-NG/releases/download/esp-2021r2-patch3/xtensa-esp32s3-elf-gcc8_4_0-esp-2021r2-patch3-linux-armel.tar.gz SHA256: 48c8dbbf96eec691a812327dc580042d9718fe989e60c2111ebfd692ac710081
linux-armhf	required	https://github.com/espressif/crosstool-NG/releases/download/esp-2021r2-patch3/xtensa-esp32s3-elf-gcc8_4_0-esp-2021r2-patch3-linux-armhf.tar.gz SHA256: efc037db5b3565d907c611ef9d17f156080949c0382feeaec86ed7b54d9fa2ae
linux-i686	required	https://github.com/espressif/crosstool-NG/releases/download/esp-2021r2-patch3/xtensa-esp32s3-elf-gcc8_4_0-esp-2021r2-patch3-linux-i686.tar.gz SHA256: 552dca3f4302ab7ca88a934b0391200198c9d10a4d8ac413fe604cbf8601f950
macos	required	https://github.com/espressif/crosstool-NG/releases/download/esp-2021r2-patch3/xtensa-esp32s3-elf-gcc8_4_0-esp-2021r2-patch3-macos.tar.gz SHA256: e5af78f05d3af07617805d06ebb45ff2fe9b6aed6970a84c35eea28a5d8d5e53
win32	required	https://github.com/espressif/crosstool-NG/releases/download/esp-2021r2-patch3/xtensa-esp32s3-elf-gcc8_4_0-esp-2021r2-patch3-win32.zip SHA256: 1b70163acccc5655449de1d149427a54f384156bd35816ec60c422d76d033f05
win64	required	https://github.com/espressif/crosstool-NG/releases/download/esp-2021r2-patch3/xtensa-esp32s3-elf-gcc8_4_0-esp-2021r2-patch3-win64.zip SHA256: 58e58575d1938879fd51e822181e54bcb343aa846eb3fca8f616c2cde7bd0041

riscv32-esp-elf Toolchain for 32-bit RISC-V based on GCC

License: GPL-3.0-with-GCC-exception

More info: https://github.com/espressif/crosstool-NG

Platform	Required	Download
linux-amd64	required	https://github.com/espressif/crosstool-NG/releases/download/esp-2021r2-patch3/riscv32-esp-elf-gcc8_4_0-esp-2021r2-patch3-linux-amd64.tar.gz SHA256: 179cbad579790ad35e0f414a18d90017c0f158c397022411a8e9867db2174f15
linux-arm64	required	https://github.com/espressif/crosstool-NG/releases/download/esp-2021r2-patch3/riscv32-esp-elf-gcc8_4_0-esp-2021r2-patch3-linux-arm64.tar.gz SHA256: fb339d476c79c76db8f903b265cab6bb6950d5ed954dec644445252d3378023c
linux-armel	required	https://github.com/espressif/crosstool-NG/releases/download/esp-2021r2-patch3/riscv32-esp-elf-gcc8_4_0-esp-2021r2-patch3-linux-armel.tar.gz SHA256: 51a6296d8334b7452dba44b2b62e87afd7fd1c74bafa1aa29b1f4ab72cb9e5e0
linux-armhf	required	https://github.com/espressif/crosstool-NG/releases/download/esp-2021r2-patch3/riscv32-esp-elf-gcc8_4_0-esp-2021r2-patch3-linux-armhf.tar.gz SHA256: faa723e2fe84154ea8081ef204d9db51c5b7e5702497dff4f3b33e250e42f776
linux-i686	required	https://github.com/espressif/crosstool-NG/releases/download/esp-2021r2-patch3/riscv32-esp-elf-gcc8_4_0-esp-2021r2-patch3-linux-i686.tar.gz SHA256: fef60f7ef37ffaa50416d8f244cdbd710d6729dae41ef06c4ec0e50a1f3b7dd7
macos	required	https://github.com/espressif/crosstool-NG/releases/download/esp-2021r2-patch3/riscv32-esp-elf-gcc8_4_0-esp-2021r2-patch3-macos.tar.gz SHA256: 4aacc1742a76349d790b1ac8e9e9d963daefda5346dbd6741cfe8e7a35a44e4e
win32	required	https://github.com/espressif/crosstool-NG/releases/download/esp-2021r2-patch3/riscv32-esp-elf-gcc8_4_0-esp-2021r2-patch3-win32.zip SHA256: eb2a442d7f551ebeb842995ec372ec4b364314ca2d7aae779399a74972f7d6bc
win64	required	https://github.com/espressif/crosstool-NG/releases/download/esp-2021r2-patch3/riscv32-esp-elf-gcc8_4_0-esp-2021r2-patch3-win64.zip SHA256: f5607e5187317d521f0474cade83f8eb590f2d165d95c3779b6ce11fbac21d1f

esp32ulp-elf Toolchain for ESP32 ULP coprocessor

License: GPL-2.0-or-later

More info: https://github.com/espressif/binutils-esp32ulp

Platform	Required	Download
linux-amd64	required	https://github.com/espressif/binutils-esp32ulp/releases/download/v2.28.51-esp-20191205/binutils-esp32ulp-linux-amd64-2.28.51-esp-20191205.tar.gz SHA256: 3016c4fc551181175bd9979869bc1d1f28fa8efa25a0e29ad7f833fca4bc03d7
linux-armel	required	https://github.com/espressif/binutils-esp32ulp/releases/download/v2.28.51-esp-20191205/binutils-esp32ulp-linux-armel-2.28.51-esp-20191205.tar.gz SHA256: 88967c086a6e71834282d9ae05841ee74dae1815f27807b25cdd3f7775a47101
macos	required	https://github.com/espressif/binutils-esp32ulp/releases/download/v2.28.51-esp-20191205/binutils-esp32ulp-macos-2.28.51-esp-20191205.tar.gz SHA256: a35d9e7a0445247c7fc9dccd3fbc35682f0fafc28beeb10c94b59466317190c4
win32	required	https://github.com/espressif/binutils-esp32ulp/releases/download/v2.28.51-esp-20191205/binutils-esp32ulp-win32-2.28.51-esp-20191205.zip SHA256: bade309353a9f0a4e5cc03bfe84845e33205f05502c4b199195e871ded271ab5
win64	required	https://github.com/espressif/binutils-esp32ulp/releases/download/v2.28.51-esp-20191205/binutils-esp32ulp-win32-2.28.51-esp-20191205.zip SHA256: bade309353a9f0a4e5cc03bfe84845e33205f05502c4b199195e871ded271ab5

esp32s2ulp-elf Toolchain for ESP32-S2 ULP coprocessor

License: GPL-2.0-or-later

More info: https://github.com/espressif/binutils-esp32ulp

Platform	Required	Download
linux-amd64	required	https://github.com/espressif/binutils-esp32ulp/releases/download/v2.28.51-esp-20191205/binutils-esp32s2ulp-linux-amd64-2.28.51-esp-20191205.tar.gz SHA256: df7b2ff6c7c718a7cbe3b4b6dbcd68180d835d164d1913bc4698fd3781b9a466
linux-armel	required	https://github.com/espressif/binutils-esp32ulp/releases/download/v2.28.51-esp-20191205/binutils-esp32s2ulp-linux-armel-2.28.51-esp-20191205.tar.gz SHA256: 893b213c8f716d455a6efb2b08b6cf1bc34d08b78ee19c31e82ac44b1b45417e
macos	required	https://github.com/espressif/binutils-esp32ulp/releases/download/v2.28.51-esp-20191205/binutils-esp32s2ulp-macos-2.28.51-esp-20191205.tar.gz SHA256: 5a9bb678a5246638cbda303f523d9bb8121a9a24dc01ecb22c21c46c41184155
win32	required	https://github.com/espressif/binutils-esp32ulp/releases/download/v2.28.51-esp-20191205/binutils-esp32s2ulp-win32-2.28.51-esp-20191205.zip SHA256: 587de59fbb469a39f96168ae3eaa9f06b2601e6e0543c87eaf1bd97f23e5c4ca
win64	required	https://github.com/espressif/binutils-esp32ulp/releases/download/v2.28.51-esp-20191205/binutils-esp32s2ulp-win32-2.28.51-esp-20191205.zip SHA256: 587de59fbb469a39f96168ae3eaa9f06b2601e6e0543c87eaf1bd97f23e5c4ca

cmake CMake build system

On Linux and macOS, it is recommended to install CMake using the OS package manager. However, for convenience it is possible to install CMake using idf_tools.py along with the other tools.

License: BSD-3-Clause

More info: https://github.com/Kitware/CMake

Platform	Required	Download
linux-amd64	optional	https://github.com/Kitware/CMake/releases/download/v3.16.4/cmake-3.16.4-Linux-x86_64.tar.gz SHA256: 12a577aa04b6639766ae908f33cf70baefc11ac4499b8b1c8812d99f05fb6a02
linux-armel	optional	https://dl.espressif.com/dl/cmake/cmake-3.20.3-Linux-armv7l.tar.gz SHA256: f8bd050c2745f0dcc4b7cef9738bbfef775950a10f5bd377abb0062835e669dc
macos	optional	https://github.com/Kitware/CMake/releases/download/v3.16.4/cmake-3.16.4-Darwin-x86_64.tar.gz SHA256: f60e0ef96da48725cd8da7d6abe83cd9501167aa51625c90dd4d31081a631279
win32	required	https://github.com/Kitware/CMake/releases/download/v3.16.4/cmake-3.16.4-win64-x64.zip SHA256: f37963bcfcebdfe5864926a3623f6c21220c35790c39cd65e64bd521cbb39c55
win64	required	https://github.com/Kitware/CMake/releases/download/v3.16.4/cmake-3.16.4-win64-x64.zip SHA256: f37963bcfcebdfe5864926a3623f6c21220c35790c39cd65e64bd521cbb39c55

openocd-esp32 OpenOCD for ESP32

License: GPL-2.0-only

More info: https://github.com/espressif/openocd-esp32

Platform	Required	Download
linux-amd64	required	https://github.com/espressif/openocd-esp32/releases/download/v0.11.0-esp32-20220706/openocd-esp32-linux-amd64-0.11.0-esp32-20220706.tar.gz SHA256: 26f1f18dd93eb70a13203848d3fb1cc2e0de1fd6749c7dd771b2de8709735aed
linux-arm64	required	https://github.com/espressif/openocd-esp32/releases/download/v0.11.0-esp32-20220706/openocd-esp32-linux-arm64-0.11.0-esp32-20220706.tar.gz SHA256: f97792bc2852937ec0accb9f0eb2e49926c0f747a71f101a4e34aed75d2c6fcc
linux-armel	required	https://github.com/espressif/openocd-esp32/releases/download/v0.11.0-esp32-20220706/openocd-esp32-linux-armel-0.11.0-esp32-20220706.tar.gz SHA256: 27e4c628994cf342e7fc5b07f49ca5533ba892fd8a150683a382a08758c3dfbe
linux-armhf	required	https://github.com/espressif/openocd-esp32/releases/download/v0.11.0-esp32-20220706/openocd-esp32-linux-armhf-0.11.0-esp32-20220706.tar.gz SHA256: 7f3b57332104e8b8e6194553365a70a9d3754878cfc063d5dc5d839513a63de9
macos	required	https://github.com/espressif/openocd-esp32/releases/download/v0.11.0-esp32-20220706/openocd-esp32-macos-0.11.0-esp32-20220706.tar.gz SHA256: 333ee2ec3c9b5dc6ad4509faae55335cdea7f8bf83a56bfcf5327e4497c8538a
win32	required	https://github.com/espressif/openocd-esp32/releases/download/v0.11.0-esp32-20220706/openocd-esp32-win32-0.11.0-esp32-20220706.zip SHA256: c3d39eb4365a9947e71f1d3780ce031185bc6437f21186568a5c05f23f57a8d0
win64	required	https://github.com/espressif/openocd-esp32/releases/download/v0.11.0-esp32-20220706/openocd-esp32-win32-0.11.0-esp32-20220706.zip SHA256: c3d39eb4365a9947e71f1d3780ce031185bc6437f21186568a5c05f23f57a8d0

ninja Ninja build system

On Linux and macOS, it is recommended to install ninja using the OS package manager. However, for convenience it is possible to install ninja using idf_tools.py along with the other tools.

License: Apache-2.0

More info: https://github.com/ninja-build/ninja

Platform	Required	Download
linux-amd64	optional	https://dl.espressif.com/dl/ninja-1.10.2-linux64.tar.gz SHA256: 32bb769de4d57aa7ee0e292cfcb7553e7cc8ea0961f7aa2b3aee60aa407c4033
macos	optional	https://dl.espressif.com/dl/ninja-1.10.2-osx.tar.gz SHA256: 847bb1ca4bc16d8dba6aeed3ecb5055498b86bc68c364c37583eb5738bb440f1
win64	required	https://dl.espressif.com/dl/ninja-1.10.2-win64.zip SHA256: bbde850d247d2737c5764c927d1071cbb1f1957dcabda4a130fa8547c12c695f

idf-exe IDF wrapper tool for Windows

License: Apache-2.0

More info: tools/windows/idf_exe

Platform	Required	Download
win32	required	https://dl.espressif.com/dl/idf-exe-v1.0.1.zip SHA256: 53eb6aaaf034cc7ed1a97d5c577afa0f99815b7793905e9408e74012d357d04a
win64	required	https://dl.espressif.com/dl/idf-exe-v1.0.1.zip SHA256: 53eb6aaaf034cc7ed1a97d5c577afa0f99815b7793905e9408e74012d357d04a

ccache Ccache (compiler cache)

License: GPL-3.0-or-later

More info: https://github.com/ccache/ccache

Platform	Required	Download
win64	required	https://dl.espressif.com/dl/ccache-3.7-w64.zip SHA256: 37e833f3f354f1145503533e776c1bd44ec2e77ff8a2476a1d2039b0b10c78d6

dfu-util dfu-util (Device Firmware Upgrade Utilities)

License: GPL-2.0-only

More info: http://dfu-util.sourceforge.net/

Platform	Required	Download
win64	required	https://dl.espressif.com/dl/dfu-util-0.9-win64.zip SHA256: 5816d7ec68ef3ac07b5ac9fb9837c57d2efe45b6a80a2f2bbe6b40b1c15c470e

4.30.2 IDF Docker Image

IDF Docker image (`espressif/idf`) is intended for building applications and libraries with specific versions of ESP-IDF, when doing automated builds.

The image contains:

- Common utilities such as git, wget, curl, zip.
- Python 3.6 or newer.
- A copy of a specific version of ESP-IDF (see below for information about versions). `IDF_PATH` environment variable is set, and points to ESP-IDF location in the container.
- All the build tools required for the specific version of ESP-IDF: CMake, make, ninja, cross-compiler toolchains, etc.
- All Python packages required by ESP-IDF are installed in a virtual environment.

The image entrypoint sets up `PATH` environment variable to point to the correct version of tools, and activates the Python virtual environment. As a result, the environment is ready to use the ESP-IDF build system.

The image can also be used as a base for custom images, if additional utilities are required.

Tags

Multiple tags of this image are maintained:

- `latest`: tracks `master` branch of ESP-IDF
- `vX.Y`: corresponds to ESP-IDF release `vX.Y`
- `release-vX.Y`: tracks `release/vX.Y` branch of ESP-IDF

注解: Versions of ESP-IDF released before this feature was introduced do not have corresponding Docker image versions. You can check the up-to-date list of available tags at https://hub.docker.com/r/espressif/idf/tags.

Usage

Setting up Docker Before using the `espressif/idf` Docker image locally, make sure you have Docker installed. Follow the instructions at https://docs.docker.com/install/, if it is not installed yet.

If using the image in CI environment, consult the documentation of your CI service on how to specify the image used for the build process.

Building a project with CMake In the project directory, run:

```
docker run --rm -v $PWD:/project -w /project espressif/idf idf.py build
```

The above command explained:

- `docker run`: runs a Docker image. It is a shorter form of the command `docker container run`.
- `--rm`: removes the container when the build is finished
- `-v $PWD:/project`: mounts the current directory on the host (`$PWD`) as `/project` directory in the container
- `espressif/idf`: uses Docker image `espressif/idf` with tag `latest` (implicitly added by Docker when no tag is specified)
- `idf.py build`: runs this command inside the container

To build with a specific docker image tag, specify it as `espressif/idf:TAG`, for example:

```
docker run --rm -v $PWD:/project -w /project espressif/idf:release-v4.4 idf.py␣
↪build
```

You can check the up-to-date list of available tags at https://hub.docker.com/r/espressif/idf/tags.

Building a project with GNU Make Same as for CMake, except that the build command is different:

```
docker run --rm -v $PWD:/project -w /project espressif/idf make defconfig all -j4
```

注解: If the `sdkconfig` file does not exist, the default behavior of GNU Make build system is to open the menuconfig UI. This may be not desired in automated build environments. To ensure that the `sdkconfig` file exists, `defconfig` target is added before `all`.

If you intend to build the same project repeatedly, you may bind the `tools/kconfig` directory of ESP-IDF to a named volume. This will prevent Kconfig tools, located in ESP-IDF directory, from being rebuilt, causing a rebuild of the rest of the project:

```
docker run --rm -v $PWD:/project -v kconfig:/opt/esp/idf/tools/kconfig -w /project␣
↪espressif/idf make defconfig all -j4
```

If you need clean up the `kconfig` volume, run `docker volume rm kconfig`.

Binding the `tools/kconfig` directory to a volume is not necessary when using the CMake build system.

Using the image interactively It is also possible to do builds interactively, to debug build issues or test the automated build scripts. Start the container with *-i -t* flags:

```
docker run --rm -v $PWD:/project -w /project -it espressif/idf
```

Then inside the container, use `idf.py` as usual:

```
idf.py menuconfig
idf.py build
```

注解: Commands which communicate with the development board, such as `idf.py flash` and `idf.py monitor` will not work in the container unless the serial port is passed through into the container. However currently this is not possible with Docker for Windows (https://github.com/docker/for-win/issues/1018) and Docker for Mac (https://github.com/docker/for-mac/issues/900).

Building custom images

The Dockerfile in ESP-IDF repository provides several build arguments which can be used to customize the Docker image:

- `IDF_CLONE_URL`: URL of the repository to clone ESP-IDF from. Can be set to a custom URL when working with a fork of ESP-IDF. Default is `https://github.com/espressif/esp-idf.git`.
- `IDF_CLONE_BRANCH_OR_TAG`: Name of a git branch or tag use when cloning ESP-IDF. This value is passed to `git clone` command using the `--branch` argument. Default is `master`.
- `IDF_CHECKOUT_REF`: If this argument is set to a non-empty value, `git checkout $IDF_CHECKOUT_REF` command will be performed after cloning. This argument can be set to the SHA of the specific commit to check out, for example if some specific commit on a release branch is desired.
- `IDF_CLONE_SHALLOW`: If this argument is set to a non-empty value, `--depth=1 --shallow-submodules` arguments will be used when performing `git clone`. This significantly reduces the amount of data downloaded and the size of the resulting Docker image. However, if switching to a different branch in such a "shallow" repository is necessary, an additional `git fetch origin <branch>` command must be executed first.
- `IDF_INSTALL_TARGETS`: Comma-separated list of IDF targets to install toolchains for, or `all` to install toolchains for all targets. Selecting specific targets reduces the amount of data downloaded and the size of the resulting Docker image. Default is `all`.

To use these arguments, pass them via the `--build-arg` command line option. For example, the following command will build a Docker image with a shallow clone of ESP-IDF v4.4.1 and tools for ESP32-C3, only:

```
docker build -t idf-custom:v4.4.1-esp32c3 \
    --build-arg IDF_CLONE_BRANCH_OR_TAG=v4.4.1 \
    --build-arg IDF_CLONE_SHALLOW=1 \
    --build-arg IDF_INSTALL_TARGETS=esp32c3 \
    tools/docker
```

4.30.3 IDF Windows Installer

Command-line parameters

Windows Installer *esp-idf-tools-setup* provides the following command-line parameters:

- `/GITRECURSIVE=[yes|no]` - Clone recursively all git repository submodules. Default: yes"
- `/GITREPO=[URL|PATH]` - URL of repository to clone ESP-IDF. Default: https://github.com/espressif/esp-idf.git
- `/GITRESET=[yes|no]` - Enable/Disable git reset of repository during installation. Default: yes.
- `/HELP` - Display command line options provided by Inno Setup installer.
- `/IDFDIR=[PATH]` - Path to directory where it will be installed. Default: `{userdesktop}\esp-idf}`
- `/IDFVERSION=[v4.3|v4.1|master]` - Use specific IDF version. E.g. v4.1, v4.2, master. Default: empty, pick the first version in the list.
- `/IDFVERSIONSURL=[URL]` - Use URL to download list of IDF versions. Default: https://dl.espressif.com/dl/esp-idf/idf_versions.txt
- `/LOG=[PATH]` - Store installation log file in specific directory. Default: empty.
- `/OFFLINE=[yes|no]` - Execute installation of Python packages by PIP in offline mode. The same result can be achieved by setting the environment variable PIP_NO_INDEX. Default: no.
- `/USEEMBEDDEDPYTHON=[yes|no]` - Use Embedded Python version for the installation. Set to `no` to allow Python selection screen in the installer. Default: yes.
- `/PYTHONWHEELSURL=[URL]` - Specify URLs to PyPi repositories for resolving binary Python Wheel dependencies. The same result can be achieved by setting the environment variable PIP_EXTRA_INDEX_URL. Default: https://dl.espressif.com/pypi
- `/SKIPSYSTEMCHECK=[yes|no]` - Skip System Check page. Default: no.
- `/VERYSILENT /SUPPRESSMSGBOXES /SP- /NOCANCEL` - Perform silent installation.

Unattended installation

The unattended installation of IDF can be achieved by following command-line parameters:

```
esp-idf-tools-setup-x.x.exe /VERYSILENT /SUPPRESSMSGBOXES /SP- /NOCANCEL
```

The installer detaches its process from the command-line. Waiting for installation to finish could be achieved by following PowerShell script:

```
esp-idf-tools-setup-x.x.exe /VERYSILENT /SUPPRESSMSGBOXES /SP- /NOCANCEL
$InstallerProcess = Get-Process esp-idf-tools-setup
Wait-Process -Id $InstallerProcess.id
```

Custom Python and custom location of Python wheels

The IDF installer is using by default embedded Python with reference to Python Wheel mirror.

Following parameters allows to select custom Python and custom location of Python wheels:

```
esp-idf-tools-setup-x.x.exe /USEEMBEDDEDPYTHON=no /PYTHONWHEELSURL=https://pypi.
↪org/simple/
```

4.30.4 IDF Component Manager

The IDF Component manager is a tool that downloads dependencies for any ESP-IDF CMake project. The download happens automatically during a run of CMake. It can source components either from the component registry or from a git repository.

A list of components can be found on https://components.espressif.com/

Using with a project

Dependencies for each component in the project are defined in a separate manifest file named `idf_component.yml` placed in the root of the component. The manifest file template can be created for a component by running `idf.py create-manifest --component=my_component`. When a new manifest is added to one of the components in the project it's necessary to reconfigure it manually by running `idf.py reconfigure`. Then build will track changes in `idf_component.yml` manifests and automatically triggers CMake when necessary.

There is an example application: example:*build_system/cmake/component_manager* that uses components installed by the component manager.

It's not necessary to have a manifest for components that don't need any managed dependencies.

When CMake configures the project (e.g. `idf.py reconfigure`) component manager does a few things:

- Processes `idf_component.yml` manifests for every component in the project and recursively solves dependencies
- Creates a `dependencies.lock` file in the root of the project with a full list of dependencies
- Downloads all dependencies to the `managed_components` directory

The lock-file `dependencies.lock` and content of `managed_components` directory is not supposed to be modified by a user. When the component manager runs it always make sure they are up to date. If these files were accidentally modified it's possible to re-run the component manager by triggering CMake with `idf.py reconfigure`

Defining dependencies in the manifest

```
dependencies:
  # Required IDF version
  idf: ">=4.1"
  # Defining a dependency from the registry:
  # https://components.espressif.com/component/example/cmp
  example/cmp: ">=1.0.0"

  # # Other ways to define dependencies
  #
  # # For components maintained by Espressif only name can be used.
  # # Same as `espressif/cmp`
  # component: "~1.0.0"
  #
  # # Or in a longer form with extra parameters
  # component2:
  #   version: ">=2.0.0"
  #
  #   # For transient dependencies `public` flag can be set.
  #   # `public` flag doesn't affect the `main` component.
  #   # All dependencies of `main` are public by default.
  #   public: true
  #
  #   # For components hosted on non-default registry:
  #   service_url: "https://componentregistry.company.com"
  #
  # # For components in git repository:
  # test_component:
  #   path: test_component
  #   git: ssh://git@gitlab.com/user/components.git
  #
  # # For test projects during component development
  # # components can be used from a local directory
  # # with relative or absolute path
  # some_local_component:
  #   path: ../../projects/component
```

Disabling the Component Manager

The component manager can be explicitly disabled by setting `IDF_COMPONENT_MANAGER` environment variable to `0`.

4.31 ULP 协处理器编程

4.31.1 ESP32 ULP coprocessor instruction set

This document provides details about the instructions used by ESP32 ULP coprocessor assembler.

ULP coprocessor has 4 16-bit general purpose registers, labeled R0, R1, R2, R3. It also has an 8-bit counter register (stage_cnt) which can be used to implement loops. Stage count register is accessed using special instructions.

ULP coprocessor can access 8k bytes of RTC_SLOW_MEM memory region. Memory is addressed in 32-bit word units. It can also access peripheral registers in RTC_CNTL, RTC_IO, and SENS peripherals.

All instructions are 32-bit. Jump instructions, ALU instructions, peripheral register and memory access instructions are executed in 1 cycle. Instructions which work with peripherals (TSENS, ADC, I2C) take variable number of cycles, depending on peripheral operation.

The instruction syntax is case insensitive. Upper and lower case letters can be used and intermixed arbitrarily. This is true both for register names and instruction names.

Note about addressing

ESP32 ULP coprocessor's JUMP, ST, LD instructions which take register as an argument (jump address, store/load base address) expect the argument to be expressed in 32-bit words.

Consider the following example program:

```
entry:
        NOP
        NOP
        NOP
        NOP
loop:
        MOVE R1, loop
        JUMP R1
```

When this program is assembled and linked, address of label `loop` will be equal to 16 (expressed in bytes). However *JUMP* instruction expects the address stored in register to be expressed in 32-bit words. To account for this common use case, assembler will convert the address of label *loop* from bytes to words, when generating `MOVE` instruction, so the code generated code will be equivalent to:

```
0000    NOP
0004    NOP
0008    NOP
000c    NOP
0010    MOVE R1, 4
0014    JUMP R1
```

The other case is when the argument of `MOVE` instruction is not a label but a constant. In this case assembler will use the value as is, without any conversion:

```
.set        val, 0x10
MOVE        R1, val
```

In this case, value loaded into R1 will be `0x10`.

Similar considerations apply to `LD` and `ST` instructions. Consider the following code:

```
        .global array
array:  .long 0
        .long 0
        .long 0
        .long 0

        MOVE R1, array
        MOVE R2, 0x1234
        ST R2, R1, 0      // write value of R2 into the first array element,
                          // i.e. array[0]

        ST R2, R1, 4      // write value of R2 into the second array element
                          // (4 byte offset), i.e. array[1]

        ADD R1, R1, 2     // this increments address by 2 words (8 bytes)
        ST R2, R1, 0      // write value of R2 into the third array element,
                          // i.e. array[2]
```

Note about instruction execution time

ULP coprocessor is clocked from RTC_FAST_CLK, which is normally derived from the internal 8MHz oscillator. Applications which need to know exact ULP clock frequency can calibrate it against the main XTAL clock:

```
#include "soc/rtc.h"

// calibrate 8M/256 clock against XTAL, get 8M/256 clock period
uint32_t rtc_8md256_period = rtc_clk_cal(RTC_CAL_8MD256, 100);
uint32_t rtc_fast_freq_hz = 1000000ULL * (1 << RTC_CLK_CAL_FRACT) * 256 / rtc_
↪8md256_period;
```

ULP coprocessor needs certain number of clock cycles to fetch each instruction, plus certain number of cycles to execute it, depending on the instruction. See description of each instruction below for details on the execution time.

Instruction fetch time is:

- 2 clock cycles —for instructions following ALU and branch instructions.
- 4 clock cycles —in other cases.

Note that when accessing RTC memories and RTC registers, ULP coprocessor has lower priority than the main CPUs. This means that ULP coprocessor execution may be suspended while the main CPUs access same memory region as the ULP.

NOP - no operation

Syntax **NOP**
Operands None
Cycles 2 cycle to execute, 4 cycles to fetch next instruction
Description No operation is performed. Only the PC is incremented.

Example:

```
1:      NOP
```

ADD - Add to register

Syntax **ADD** *Rdst, Rsrc1, Rsrc2*
ADD *Rdst, Rsrc1, imm*
Operands

- *Rdst* - Register R[0..3]
- *Rsrc1* - Register R[0..3]
- *Rsrc2* - Register R[0..3]
- *Imm* - 16-bit signed value

Cycles 2 cycles to execute, 4 cycles to fetch next instruction
Description The instruction adds source register to another source register or to a 16-bit signed value and stores result to the destination register.

Examples:

```
1:      ADD R1, R2, R3          //R1 = R2 + R3

2:      Add R1, R2, 0x1234      //R1 = R2 + 0x1234

3:      .set value1, 0x03       //constant value1=0x03
        Add R1, R2, value1      //R1 = R2 + value1


4:      .global label           //declaration of variable label
        Add R1, R2, label       //R1 = R2 + label
```

(下页继续)

(续上页)

```
      ...
label: nop            //definition of variable label
```

SUB - Subtract from register

Syntax **SUB** *Rdst, Rsrc1, Rsrc2*
SUB *Rdst, Rsrc1, imm*

Operands

- *Rdst* - Register R[0..3]
- *Rsrc1* - Register R[0..3]
- *Rsrc2* - Register R[0..3]
- *Imm* - 16-bit signed value

Cycles 2 cycles to execute, 4 cycles to fetch next instruction

Description The instruction subtracts the source register from another source register or subtracts 16-bit signed value from a source register, and stores result to the destination register.

Examples:

```
1:          SUB R1, R2, R3              //R1 = R2 - R3

2:          sub R1, R2, 0x1234          //R1 = R2 - 0x1234

3:          .set value1, 0x03           //constant value1=0x03
            SUB R1, R2, value1          //R1 = R2 - value1
4:          .global label               //declaration of variable label
            SUB R1, R2, label           //R1 = R2 - label
              ....
  label:    nop                         //definition of variable label
```

AND - Logical AND of two operands

Syntax **AND** *Rdst, Rsrc1, Rsrc2*
AND *Rdst, Rsrc1, imm*

Operands

- *Rdst* - Register R[0..3]
- *Rsrc1* - Register R[0..3]
- *Rsrc2* - Register R[0..3]
- *Imm* - 16-bit signed value

Cycles 2 cycles to execute, 4 cycles to fetch next instruction

Description The instruction does logical AND of a source register and another source register or 16-bit signed value and stores result to the destination register.

Examples:

```
1:          AND R1, R2, R3          //R1 = R2 & R3

2:          AND R1, R2, 0x1234      //R1 = R2 & 0x1234

3:          .set value1, 0x03       //constant value1=0x03
            AND R1, R2, value1      //R1 = R2 & value1

4:          .global label           //declaration of variable label
            AND R1, R2, label       //R1 = R2 & label
              ...
  label:    nop                     //definition of variable label
```

OR - Logical OR of two operands

Syntax **OR** *Rdst, Rsrc1, Rsrc2*
OR *Rdst, Rsrc1, imm*

Operands

- *Rdst* - Register R[0..3]
- *Rsrc1* - Register R[0..3]
- *Rsrc2* - Register R[0..3]
- *Imm* - 16-bit signed value

Cycles 2 cycles to execute, 4 cycles to fetch next instruction

Description The instruction does logical OR of a source register and another source register or 16-bit signed value and stores result to the destination register.

Examples:

```
1:        OR R1, R2, R3             //R1 = R2 \| R3

2:        OR R1, R2, 0x1234         //R1 = R2 \| 0x1234

3:        .set value1, 0x03         //constant value1=0x03
          OR R1, R2, value1         //R1 = R2 \| value1

4:        .global label             //declaration of variable label
          OR R1, R2, label          //R1 = R2 \|label
          ...
  label: nop                        //definition of variable label
```

LSH - Logical Shift Left

Syntax **LSH** *Rdst, Rsrc1, Rsrc2*
LSH *Rdst, Rsrc1, imm*

Operands

- *Rdst* - Register R[0..3]
- *Rsrc1* - Register R[0..3]
- *Rsrc2* - Register R[0..3]
- *Imm* - 16-bit signed value

Cycles 2 cycles to execute, 4 cycles to fetch next instruction

Description The instruction does logical shift to left of source register to number of bits from another source register or 16-bit signed value and store result to the destination register.

Examples:

```
1:        LSH R1, R2, R3            //R1 = R2 << R3

2:        LSH R1, R2, 0x03          //R1 = R2 << 0x03

3:        .set value1, 0x03         //constant value1=0x03
          LSH R1, R2, value1        //R1 = R2 << value1

4:        .global label             //declaration of variable label
          LSH R1, R2, label         //R1 = R2 << label
          ...
  label:  nop                        //definition of variable label
```

RSH - Logical Shift Right

Syntax **RSH** *Rdst, Rsrc1, Rsrc2*
RSH *Rdst, Rsrc1, imm*

Operands *Rdst* - Register R[0..3] *Rsrc1* - Register R[0..3] *Rsrc2* - Register R[0..3] *Imm* - 16-bit signed value

Cycles 2 cycles to execute, 4 cycles to fetch next instruction
Description The instruction does logical shift to right of source register to number of bits from another source register or 16-bit signed value and store result to the destination register.

Examples:

```
1:        RSH R1, R2, R3              //R1 = R2 >> R3

2:        RSH R1, R2, 0x03            //R1 = R2 >> 0x03

3:        .set value1, 0x03           //constant value1=0x03
          RSH R1, R2, value1          //R1 = R2 >> value1

4:        .global label               //declaration of variable label
          RSH R1, R2, label           //R1 = R2 >> label
  label:  nop                         //definition of variable label
```

MOVE –Move to register

Syntax **MOVE** *Rdst, Rsrc*
MOVE *Rdst, imm*
Operands

- *Rdst* –Register R[0..3]
- *Rsrc* –Register R[0..3]
- *Imm* –16-bit signed value

Cycles 2 cycles to execute, 4 cycles to fetch next instruction
Description The instruction move to destination register value from source register or 16-bit signed value.
Note that when a label is used as an immediate, the address of the label will be converted from bytes to words. This is because LD, ST, and JUMP instructions expect the address register value to be expressed in words rather than bytes. To avoid using an extra instruction

Examples:

```
1:        MOVE        R1, R2            //R1 = R2

2:        MOVE        R1, 0x03          //R1 = 0x03

3:        .set        value1, 0x03      //constant value1=0x03
          MOVE        R1, value1        //R1 = value1

4:        .global      label            //declaration of label
          MOVE         R1, label        //R1 = address_of(label) / 4
          ...
  label:  nop                           //definition of label
```

ST –Store data to the memory

Syntax **ST** *Rsrc, Rdst, offset*
Operands

- *Rsrc* –Register R[0..3], holds the 16-bit value to store
- *Rdst* –Register R[0..3], address of the destination, in 32-bit words
- *Offset* –13-bit signed value, offset in bytes

Cycles 4 cycles to execute, 4 cycles to fetch next instruction
Description The instruction stores the 16-bit value of Rsrc to the lower half-word of memory with address Rdst+offset. The upper half-word is written with the current program counter (PC), expressed in words, shifted left by 5 bits:

```
Mem[Rdst + offset / 4]{31:0} = {PC[10:0], 5'b0, Rsrc[15:0]}
```

The application can use higher 16 bits to determine which instruction in the ULP program has written any particular word into memory.

Examples:

```
1:        ST  R1, R2, 0x12        //MEM[R2+0x12] = R1

2:        .data                   //Data section definition
  Addr1:  .word     123           // Define label Addr1 16 bit
          .set      offs, 0x00    // Define constant offs
          .text                   //Text section definition
          MOVE      R1, 1         // R1 = 1
          MOVE      R2, Addr1     // R2 = Addr1
          ST        R1, R2, offs  // MEM[R2 +  0] = R1
                                  // MEM[Addr1 + 0] will be 32'h600001
```

LD –Load data from the memory

Syntax **LD** *Rdst, Rsrc, offset*

Operands *Rdst* –Register R[0..3], destination

Rsrc –Register R[0..3], holds address of destination, in 32-bit words

Offset –13-bit signed value, offset in bytes

Cycles 4 cycles to execute, 4 cycles to fetch next instruction

Description The instruction loads lower 16-bit half-word from memory with address Rsrc+offset into the destination register Rdst:

```
Rdst[15:0] = Mem[Rsrc + offset / 4][15:0]
```

Examples:

```
1:        LD  R1, R2, 0x12            //R1 = MEM[R2+0x12]

2:        .data                       //Data section definition
  Addr1:  .word     123               // Define label Addr1 16 bit
          .set      offs, 0x00        // Define constant offs
          .text                       //Text section definition
          MOVE      R1, 1             // R1 = 1
          MOVE      R2, Addr1         // R2 = Addr1 / 4 (address of label is␣
↪converted into words)
          LD        R1, R2, offs      // R1 = MEM[R2 +  0]
                                      // R1 will be 123
```

JUMP –Jump to an absolute address

Syntax **JUMP** *Rdst*

JUMP *ImmAddr*

JUMP *Rdst, Condition*

JUMP *ImmAddr, Condition*

Operands

- *Rdst* –Register R[0..3] containing address to jump to (expressed in 32-bit words)
- *ImmAddr* –13 bits address (expressed in bytes), aligned to 4 bytes
- ***Condition*:**
  - EQ –jump if last ALU operation result was zero
  - OV –jump if last ALU has set overflow flag

Cycles 2 cycles to execute, 2 cycles to fetch next instruction

Description The instruction makes jump to the specified address. Jump can be either unconditional or based on an ALU flag.

Examples:

```
1:          JUMP        R1              // Jump to address in R1 (address in R1 is in␣
↪32-bit words)

2:          JUMP        0x120, EQ       // Jump to address 0x120 (in bytes) if ALU␣
↪result is zero

3:          JUMP        label           // Jump to label
            ...
  label:    nop                         // Definition of label

4:          .global     label           // Declaration of global label

            MOVE        R1, label       // R1 = label (value loaded into R1 is in words)
            JUMP        R1              // Jump to label
            ...
  label:    nop                         // Definition of label
```

JUMPR –Jump to a relative offset (condition based on R0)

Syntax **JUMPR** *Step, Threshold, Condition*

Operands

- *Step* –relative shift from current position, in bytes
- *Threshold* –threshold value for branch condition
- ***Condition*:**
  - *EQ* (equal) –jump if value in R0 == threshold
  - *LT* (less than) –jump if value in R0 < threshold
  - *LE* (less or equal) –jump if value in R0 <= threshold
  - *GT* (greater than) –jump if value in R0 > threshold
  - *GE* (greater or equal) –jump if value in R0 >= threshold

Cycles Conditions *LT*, *GE*, *LE* and *GT*: 2 cycles to execute, 2 cycles to fetch next instruction

Conditions *LE* and *GT* are implemented in the assembler using one **JUMPR** instructions:

```
// JUMPR target, threshold, GT is implemented as:

          JUMPR target, threshold+1, GE

// JUMPR target, threshold, LE is implemented as:

          JUMPR target, threshold + 1, LT
```

Conditions *EQ* is implemented in the assembler using two **JUMPR** instructions:

```
// JUMPR target, threshold, EQ is implemented as:

          JUMPR next, threshold + 1, GE
          JUMPR target, threshold, GE
next:
```

Therefore the execution time will depend on the branches taken: either 2 cycles to execute + 2 cycles to fetch, or 4 cycles to execute + 4 cycles to fetch.

Description The instruction makes a jump to a relative address if condition is true. Condition is the result of comparison of R0 register value and the threshold value.

Examples:

```
1:pos:      JUMPR       16, 20, GE    // Jump to address (position + 16 bytes) if␣
↪value in R0 >= 20

2:          // Down counting loop using R0 register
            MOVE        R0, 16        // load 16 into R0
```

(下页继续)

(续上页)

```
  label:  SUB         R0, R0, 1     // R0--
          NOP                       // do something
          JUMPR       label, 1, GE // jump to label if R0 >= 1
```

JUMPS –Jump to a relative address (condition based on stage count)

Syntax **JUMPS** *Step, Threshold, Condition*

Operands

- *Step* –relative shift from current position, in bytes
- *Threshold* –threshold value for branch condition
- ***Condition*:**
  - *EQ* (equal) –jump if value in stage_cnt == threshold
  - *LT* (less than) –jump if value in stage_cnt < threshold
  - *LE* (less or equal) - jump if value in stage_cnt <= threshold
  - *GT* (greater than) –jump if value in stage_cnt > threshold
  - *GE* (greater or equal) —jump if value in stage_cnt >= threshold

Cycles Conditions *LE*, *LT*, *GE*: 2 cycles to execute, 2 cycles to fetch next instruction

Conditions *EQ*, *GT* are implemented in the assembler using two **JUMPS** instructions:

```
// JUMPS target, threshold, EQ is implemented as:

          JUMPS next, threshold, LT
          JUMPS target, threshold, LE
next:

// JUMPS target, threshold, GT is implemented as:

          JUMPS next, threshold, LE
          JUMPS target, threshold, GE
next:
```

Therefore the execution time will depend on the branches taken: either 2 cycles to execute + 2 cycles to fetch, or 4 cycles to execute + 4 cycles to fetch.

Description The instruction makes a jump to a relative address if condition is true. Condition is the result of comparison of count register value and threshold value.

Examples:

```
1:pos:    JUMPS     16, 20, EQ     // Jump to (position + 16 bytes) if stage_cnt␣
↪== 20

2:        // Up counting loop using stage count register
          STAGE_RST                  // set stage_cnt to 0
  label:  STAGE_INC  1               // stage_cnt++
          NOP                        // do something
          JUMPS       label, 16, LT  // jump to label if stage_cnt < 16
```

STAGE_RST –Reset stage count register

Syntax **STAGE_RST**

Operands No operands

Description The instruction sets the stage count register to 0

Cycles 2 cycles to execute, 4 cycles to fetch next instruction

Examples:

```
1:       STAGE_RST      // Reset stage count register
```

STAGE_INC –Increment stage count register

Syntax **STAGE_INC** *Value*
Operands

- *Value* –8 bits value

Cycles 2 cycles to execute, 4 cycles to fetch next instruction
Description The instruction increments stage count register by given value.

Examples:

```
1:        STAGE_INC      10          // stage_cnt += 10

2:        // Up counting loop example:
          STAGE_RST                  // set stage_cnt to 0
  label:  STAGE_INC  1               // stage_cnt++
          NOP                        // do something
          JUMPS      label, 16, LT   // jump to label if stage_cnt < 16
```

STAGE_DEC –Decrement stage count register

Syntax **STAGE_DEC** *Value*
Operands

- *Value* –8 bits value

Cycles 2 cycles to execute, 4 cycles to fetch next instruction
Description The instruction decrements stage count register by given value.

Examples:

```
1:        STAGE_DEC      10        // stage_cnt -= 10;

2:        // Down counting loop example
          STAGE_RST                // set stage_cnt to 0
          STAGE_INC  16            // increment stage_cnt to 16
  label:  STAGE_DEC  1             // stage_cnt--;
          NOP                      // do something
          JUMPS      label, 0, GT  // jump to label if stage_cnt > 0
```

HALT –End the program

Syntax **HALT**
Operands No operands
Cycles 2 cycles to execute
Description The instruction halts the ULP coprocessor and restarts ULP wakeup timer, if it is enabled.

Examples:

```
1:       HALT      // Halt the coprocessor
```

WAKE –Wake up the chip

Syntax **WAKE**
Operands No operands
Cycles 2 cycles to execute, 4 cycles to fetch next instruction
Description The instruction sends an interrupt from ULP to RTC controller.

- If the SoC is in deep sleep mode, and ULP wakeup is enabled, this causes the SoC to wake up.
- If the SoC is not in deep sleep mode, and ULP interrupt bit (RTC_CNTL_ULP_CP_INT_ENA) is set in RTC_CNTL_INT_ENA_REG register, RTC interrupt will be triggered.

Note that before using WAKE instruction, ULP program may needs to wait until RTC controller is ready to wake up the main CPU. This is indicated using RTC_CNTL_RDY_FOR_WAKEUP bit of RTC_CNTL_LOW_POWER_ST_REG register. If WAKE instruction is executed while RTC_CNTL_RDY_FOR_WAKEUP is zero, it has no effect (wake up does not occur).

Examples:

```
1: is_rdy_for_wakeup:                    // Read RTC_CNTL_RDY_FOR_WAKEUP bit
          READ_RTC_FIELD(RTC_CNTL_LOW_POWER_ST_REG, RTC_CNTL_RDY_FOR_WAKEUP)
          AND r0, r0, 1
          JUMP is_rdy_for_wakeup, eq     // Retry until the bit is set
          WAKE                           // Trigger wake up
          REG_WR 0x006, 24, 24, 0        // Stop ULP timer (clear RTC_CNTL_ULP_CP_
↪SLP_TIMER_EN)
          HALT                           // Stop the ULP program
          // After these instructions, SoC will wake up,
          // and ULP will not run again until started by the main program.
```

SLEEP –set ULP wakeup timer period

Syntax **SLEEP** *sleep_reg*
Operands

- *sleep_reg* –0..4, selects one of `SENS_ULP_CP_SLEEP_CYCx_REG` registers.

Cycles 2 cycles to execute, 4 cycles to fetch next instruction
Description The instruction selects which of the `SENS_ULP_CP_SLEEP_CYCx_REG` (x = 0..4) register values is to be used by the ULP wakeup timer as wakeup period. By default, the value from `SENS_ULP_CP_SLEEP_CYC0_REG` is used.

Examples:

```
1:        SLEEP     1          // Use period set in SENS_ULP_CP_SLEEP_CYC1_REG

2:        .set sleep_reg, 4    // Set constant
          SLEEP  sleep_reg     // Use period set in SENS_ULP_CP_SLEEP_CYC4_REG
```

WAIT –wait some number of cycles

Syntax **WAIT** *Cycles*
Operands

- *Cycles* –number of cycles for wait

Cycles 2 + *Cycles* cycles to execute, 4 cycles to fetch next instruction
Description The instruction delays for given number of cycles.

Examples:

```
1:        WAIT     10          // Do nothing for 10 cycles

2:        .set  wait_cnt, 10   // Set a constant
          WAIT  wait_cnt       // wait for 10 cycles
```

TSENS –do measurement with temperature sensor

Syntax

- **TSENS** *Rdst, Wait_Delay*

Operands

- *Rdst* –Destination Register R[0..3], result will be stored to this register
- *Wait_Delay* –number of cycles used to perform the measurement

Cycles 2 + *Wait_Delay* + 3 * TSENS_CLK to execute, 4 cycles to fetch next instruction

Description The instruction performs measurement using TSENS and stores the result into a general purpose register.

Examples:

```
1:        TSENS     R1, 1000      // Measure temperature sensor for 1000 cycles,
                                  // and store result to R1
```

ADC –do measurement with ADC

Syntax

- **ADC** *Rdst, Sar_sel, Mux*
- **ADC** *Rdst, Sar_sel, Mux, 0* —deprecated form

Operands

- *Rdst* –Destination Register R[0..3], result will be stored to this register
- *Sar_sel* –Select ADC: 0 = SARADC1, 1 = SARADC2
- *Mux* - Enable ADC channel. Channel number is [Mux-1]. If the user passes Mux value 1, then ADC channel 0 gets used.

Cycles `23 + max(1, SAR_AMP_WAIT1) + max(1, SAR_AMP_WAIT2) + max(1, SAR_AMP_WAIT3) + SARx_SAMPLE_CYCLE + SARx_SAMPLE_BIT` cycles to execute, 4 cycles to fetch next instruction

Description The instruction makes measurements from ADC.

Examples:

```
1:        ADC       R1, 0, 1      // Measure value using ADC1 channel 0 and store␣
↪result into R1
```

I2C_RD - read single byte from I2C slave

Syntax

- **I2C_RD** *Sub_addr, High, Low, Slave_sel*

Operands

- *Sub_addr* –Address within the I2C slave to read.
- *High*, *Low* —Define range of bits to read. Bits outside of [High, Low] range are masked.
- *Slave_sel* - Index of I2C slave address to use.

Cycles Execution time mostly depends on I2C communication time. 4 cycles to fetch next instruction.

Description `I2C_RD` instruction reads one byte from I2C slave with index `Slave_sel`. Slave address (in 7-bit format) has to be set in advance into *SENS_I2C_SLAVE_ADDRx* register field, where `x == Slave_sel`. 8 bits of read result is stored into *R0* register.

Examples:

```
1:        I2C_RD      0x10, 7, 0, 0      // Read byte from sub-address 0x10 of␣
↪slave with address set in SENS_I2C_SLAVE_ADDR0
```

I2C_WR - write single byte to I2C slave

Syntax

- **I2C_WR** *Sub_addr, Value, High, Low, Slave_sel*

Operands

- *Sub_addr* –Address within the I2C slave to write.
- *Value* –8-bit value to be written.
- *High*, *Low* —Define range of bits to write. Bits outside of [High, Low] range are masked.
- *Slave_sel* - Index of I2C slave address to use.

Cycles Execution time mostly depends on I2C communication time. 4 cycles to fetch next instruction.

Description `I2C_WR` instruction writes one byte to I2C slave with index `Slave_sel`. Slave address (in 7-bit format) has to be set in advance into *SENS_I2C_SLAVE_ADDRx* register field, where `x == Slave_sel`.

Examples:

```
1:        I2C_WR      0x20, 0x33, 7, 0, 1      // Write byte 0x33 to sub-address␣
↪0x20 of slave with address set in SENS_I2C_SLAVE_ADDR1.
```

REG_RD –read from peripheral register

Syntax **REG_RD** *Addr, High, Low*
Operands

- *Addr* –Register address, in 32-bit words
- *High* –Register end bit number
- *Low* –Register start bit number

Cycles 4 cycles to execute, 4 cycles to fetch next instruction
Description The instruction reads up to 16 bits from a peripheral register into a general purpose register: `R0 = REG[Addr][High:Low]`.
This instruction can access registers in RTC_CNTL, RTC_IO, SENS, and RTC_I2C peripherals. Address of the the register, as seen from the ULP, can be calculated from the address of the same register on the DPORT bus as follows:

```
addr_ulp = (addr_dport - DR_REG_RTCCNTL_BASE) / 4
```

Examples:

```
1:        REG_RD      0x120, 7, 4     // load 4 bits: R0 = {12'b0, REG[0x120][7:4]}
```

REG_WR –write to peripheral register

Syntax **REG_WR** *Addr, High, Low, Data*
Operands

- *Addr* –Register address, in 32-bit words.
- *High* –Register end bit number
- *Low* –Register start bit number
- *Data* –Value to write, 8 bits

Cycles 8 cycles to execute, 4 cycles to fetch next instruction
Description The instruction writes up to 8 bits from an immediate data value into a peripheral register: `REG[Addr][High:Low] = data`.
This instruction can access registers in RTC_CNTL, RTC_IO, SENS, and RTC_I2C peripherals. Address of the the register, as seen from the ULP, can be calculated from the address of the same register on the DPORT bus as follows:

```
addr_ulp = (addr_dport - DR_REG_RTCCNTL_BASE) / 4
```

Examples:

```
1:        REG_WR      0x120, 7, 0, 0x10   // set 8 bits: REG[0x120][7:0] = 0x10
```

Convenience macros for peripheral registers access

ULP source files are passed through C preprocessor before the assembler. This allows certain macros to be used to facilitate access to peripheral registers.

Some existing macros are defined in `soc/soc_ulp.h` header file. These macros allow access to the fields of peripheral registers by their names. Peripheral registers names which can be used with these macros are the ones

defined in `soc/rtc_cntl_reg.h`, `soc/rtc_io_reg.h`, `soc/sens_reg.h`, and `soc/rtc_i2c_reg.h`.

READ_RTC_REG(rtc_reg, low_bit, bit_width) Read up to 16 bits from rtc_reg[low_bit + bit_width - 1 : low_bit] into R0. For example:

```
#include "soc/soc_ulp.h"
#include "soc/rtc_cntl_reg.h"

/* Read 16 lower bits of RTC_CNTL_TIME0_REG into R0 */
READ_RTC_REG(RTC_CNTL_TIME0_REG, 0, 16)
```

READ_RTC_FIELD(rtc_reg, field) Read from a field in rtc_reg into R0, up to 16 bits. For example:

```
#include "soc/soc_ulp.h"
#include "soc/sens_reg.h"

/* Read 8-bit SENS_TSENS_OUT field of SENS_SAR_SLAVE_ADDR3_REG into R0 */
READ_RTC_FIELD(SENS_SAR_SLAVE_ADDR3_REG, SENS_TSENS_OUT)
```

WRITE_RTC_REG(rtc_reg, low_bit, bit_width, value) Write immediate value into rtc_reg[low_bit + bit_width - 1 : low_bit], bit_width <= 8. For example:

```
#include "soc/soc_ulp.h"
#include "soc/rtc_io_reg.h"

/* Set BIT(2) of RTC_GPIO_OUT_DATA_W1TS field in RTC_GPIO_OUT_W1TS_REG */
WRITE_RTC_REG(RTC_GPIO_OUT_W1TS_REG, RTC_GPIO_OUT_DATA_W1TS_S + 2, 1, 1)
```

WRITE_RTC_FIELD(rtc_reg, field, value) Write immediate value into a field in rtc_reg, up to 8 bits. For example:

```
#include "soc/soc_ulp.h"
#include "soc/rtc_cntl_reg.h"

/* Set RTC_CNTL_ULP_CP_SLP_TIMER_EN field of RTC_CNTL_STATE0_REG to 0 */
WRITE_RTC_FIELD(RTC_CNTL_STATE0_REG, RTC_CNTL_ULP_CP_SLP_TIMER_EN, 0)
```

4.31.2 Programming ULP coprocessor using C macros (legacy)

In addition to the existing binutils port for the ESP32 ULP coprocessor, it is possible to generate programs for the ULP by embedding assembly-like macros into an ESP32 application. Here is an example how this can be done:

```
const ulp_insn_t program[] = {
    I_MOVI(R3, 16),          // R3 <- 16
    I_LD(R0, R3, 0),         // R0 <- RTC_SLOW_MEM[R3 + 0]
    I_LD(R1, R3, 1),         // R1 <- RTC_SLOW_MEM[R3 + 1]
    I_ADDR(R2, R0, R1),      // R2 <- R0 + R1
    I_ST(R2, R3, 2),         // R2 -> RTC_SLOW_MEM[R2 + 2]
    I_HALT()
};
size_t load_addr = 0;
size_t size = sizeof(program)/sizeof(ulp_insn_t);
ulp_process_macros_and_load(load_addr, program, &size);
ulp_run(load_addr);
```

The `program` array is an array of `ulp_insn_t`, i.e. ULP coprocessor instructions. Each `I_XXX` preprocessor define translates into a single 32-bit instruction. Arguments of these preprocessor defines can be register numbers (`R0` —`R3`) and literal constants. See *ULP coprocessor instruction defines* section for descriptions of instructions and arguments they take.

注解: Because some of the instruction macros expand to inline function calls, defining such array in global scope

will cause the compiler to produce an "initializer element is not constant" error. To fix this error, move the definition of instructions array into local scope.

Load and store instructions use addresses expressed in 32-bit words. Address 0 corresponds to the first word of `RTC_SLOW_MEM` (which is address 0x50000000 as seen by the main CPUs).

To generate branch instructions, special `M_` preprocessor defines are used. `M_LABEL` define can be used to define a branch target. Label identifier is a 16-bit integer. `M_Bxxx` defines can be used to generate branch instructions with target set to a particular label.

Implementation note: these `M_` preprocessor defines will be translated into two `ulp_insn_t` values: one is a token value which contains label number, and the other is the actual instruction. `ulp_process_macros_and_load` function resolves the label number to the address, modifies the branch instruction to use the correct address, and removes the the extra `ulp_insn_t` token which contains the label numer.

Here is an example of using labels and branches:

```
const ulp_insn_t program[] = {
    I_MOVI(R0, 34),          // R0 <- 34
    M_LABEL(1),              // label_1
    I_MOVI(R1, 32),          // R1 <- 32
    I_LD(R1, R1, 0),         // R1 <- RTC_SLOW_MEM[R1]
    I_MOVI(R2, 33),          // R2 <- 33
    I_LD(R2, R2, 0),         // R2 <- RTC_SLOW_MEM[R2]
    I_SUBR(R3, R1, R2),      // R3 <- R1 - R2
    I_ST(R3, R0, 0),         // R3 -> RTC_SLOW_MEM[R0 + 0]
    I_ADDI(R0, R0, 1),       // R0++
    M_BL(1, 64),             // if (R0 < 64) goto label_1
    I_HALT(),
};
RTC_SLOW_MEM[32] = 42;
RTC_SLOW_MEM[33] = 18;
size_t load_addr = 0;
size_t size = sizeof(program)/sizeof(ulp_insn_t);
ulp_process_macros_and_load(load_addr, program, &size);
ulp_run(load_addr);
```

Application Example

Demonstration of entering into deep sleep mode and waking up using several wake up sources: system/deep_sleep.

API Reference

Header File

- ulp/include/esp32/ulp.h

Functions

esp_err_t **ulp_process_macros_and_load**(uint32_t *load_addr*, **const** ulp_insn_t **program*, size_t **psize*)

Resolve all macro references in a program and load it into RTC memory.

Return

- ESP_OK on success
- ESP_ERR_NO_MEM if auxiliary temporary structure can not be allocated
- one of ESP_ERR_ULP_xxx if program is not valid or can not be loaded

Parameters

- `load_addr`: address where the program should be loaded, expressed in 32-bit words
- `program`: ulp_insn_t array with the program

- `psize`: size of the program, expressed in 32-bit words

esp_err_t **ulp_run**(uint32_t *entry_point*)

Run the program loaded into RTC memory.

Return ESP_OK on success

Parameters

- `entry_point`: entry point, expressed in 32-bit words

Error codes

ESP_ERR_ULP_BASE

Offset for ULP-related error codes

ESP_ERR_ULP_SIZE_TOO_BIG

Program doesn't fit into RTC memory reserved for the ULP

ESP_ERR_ULP_INVALID_LOAD_ADDR

Load address is outside of RTC memory reserved for the ULP

ESP_ERR_ULP_DUPLICATE_LABEL

More than one label with the same number was defined

ESP_ERR_ULP_UNDEFINED_LABEL

Branch instructions references an undefined label

ESP_ERR_ULP_BRANCH_OUT_OF_RANGE

Branch target is out of range of B instruction (try replacing with BX)

ULP coprocessor registers

ULP co-processor has 4 16-bit general purpose registers. All registers have same functionality, with one exception. R0 register is used by some of the compare-and-branch instructions as a source register.

These definitions can be used for all instructions which require a register.

R0

general purpose register 0

R1

general purpose register 1

R2

general purpose register 2

R3

general purpose register 3

ULP coprocessor instruction defines

I_DELAY(cycles_)

Delay (nop) for a given number of cycles

I_HALT()

Halt the coprocessor.

This instruction halts the coprocessor, but keeps ULP timer active. As such, ULP program will be restarted again by timer. To stop the program and prevent the timer from restarting the program, use I_END(0) instruction.

I_END()

Stop ULP program timer.

This is a convenience macro which disables the ULP program timer. Once this instruction is used, ULP program will not be restarted anymore until ulp_run function is called.

ULP program will continue running after this instruction. To stop the currently running program, use I_HALT().

I_ST(reg_val, reg_addr, offset_)
Store value from register reg_val into RTC memory.

The value is written to an offset calculated by adding value of reg_addr register and offset_ field (this offset is expressed in 32-bit words). 32 bits written to RTC memory are built as follows:

- bits [31:21] hold the PC of current instruction, expressed in 32-bit words
- bits [20:16] = 5'b1
- bits [15:0] are assigned the contents of reg_val

RTC_SLOW_MEM[addr + offset_] = { 5'b0, insn_PC[10:0], val[15:0] }

I_LD(reg_dest, reg_addr, offset_)
Load value from RTC memory into reg_dest register.

Loads 16 LSBs from RTC memory word given by the sum of value in reg_addr and value of offset_.

I_WR_REG(reg, low_bit, high_bit, val)
Write literal value to a peripheral register

reg[high_bit : low_bit] = val This instruction can access RTC_CNTL_, RTC_IO_, SENS_, and RTC_I2C peripheral registers.

I_RD_REG(reg, low_bit, high_bit)
Read from peripheral register into R0

R0 = reg[high_bit : low_bit] This instruction can access RTC_CNTL_, RTC_IO_, SENS_, and RTC_I2C peripheral registers.

I_BL(pc_offset, imm_value)
Branch relative if R0 less than immediate value.

pc_offset is expressed in words, and can be from -127 to 127 imm_value is a 16-bit value to compare R0 against

I_BGE(pc_offset, imm_value)
Branch relative if R0 greater or equal than immediate value.

pc_offset is expressed in words, and can be from -127 to 127 imm_value is a 16-bit value to compare R0 against

I_BXR(reg_pc)
Unconditional branch to absolute PC, address in register.

reg_pc is the register which contains address to jump to. Address is expressed in 32-bit words.

I_BXI(imm_pc)
Unconditional branch to absolute PC, immediate address.

Address imm_pc is expressed in 32-bit words.

I_BXZR(reg_pc)
Branch to absolute PC if ALU result is zero, address in register.

reg_pc is the register which contains address to jump to. Address is expressed in 32-bit words.

I_BXZI(imm_pc)
Branch to absolute PC if ALU result is zero, immediate address.

Address imm_pc is expressed in 32-bit words.

I_BXFR(reg_pc)
Branch to absolute PC if ALU overflow, address in register

reg_pc is the register which contains address to jump to. Address is expressed in 32-bit words.

I_BXFI(imm_pc)
Branch to absolute PC if ALU overflow, immediate address

Address imm_pc is expressed in 32-bit words.

I_ADDR (reg_dest, reg_src1, reg_src2)
Addition: dest = src1 + src2

I_SUBR (reg_dest, reg_src1, reg_src2)
Subtraction: dest = src1 - src2

I_ANDR (reg_dest, reg_src1, reg_src2)
Logical AND: dest = src1 & src2

I_ORR (reg_dest, reg_src1, reg_src2)
Logical OR: dest = src1 | src2

I_MOVR (reg_dest, reg_src)
Copy: dest = src

I_LSHR (reg_dest, reg_src, reg_shift)
Logical shift left: dest = src « shift

I_RSHR (reg_dest, reg_src, reg_shift)
Logical shift right: dest = src » shift

I_ADDI (reg_dest, reg_src, imm_)
Add register and an immediate value: dest = src1 + imm

I_SUBI (reg_dest, reg_src, imm_)
Subtract register and an immediate value: dest = src - imm

I_ANDI (reg_dest, reg_src, imm_)
Logical AND register and an immediate value: dest = src & imm

I_ORI (reg_dest, reg_src, imm_)
Logical OR register and an immediate value: dest = src | imm

I_MOVI (reg_dest, imm_)
Copy an immediate value into register: dest = imm

I_LSHI (reg_dest, reg_src, imm_)
Logical shift left register value by an immediate: dest = src « imm

I_RSHI (reg_dest, reg_src, imm_)
Logical shift right register value by an immediate: dest = val » imm

M_LABEL (label_num)
Define a label with number label_num.

This is a macro which doesn’ t generate a real instruction. The token generated by this macro is removed by ulp_process_macros_and_load function. Label defined using this macro can be used in branch macros defined below.

M_BL (label_num, imm_value)
Macro: branch to label label_num if R0 is less than immediate value.

This macro generates two ulp_insn_t values separated by a comma, and should be used when defining contents of ulp_insn_t arrays. First value is not a real instruction; it is a token which is removed by ulp_process_macros_and_load function.

M_BGE (label_num, imm_value)
Macro: branch to label label_num if R0 is greater or equal than immediate value

This macro generates two ulp_insn_t values separated by a comma, and should be used when defining contents of ulp_insn_t arrays. First value is not a real instruction; it is a token which is removed by ulp_process_macros_and_load function.

M_BX (label_num)
Macro: unconditional branch to label

This macro generates two ulp_insn_t values separated by a comma, and should be used when defining contents of ulp_insn_t arrays. First value is not a real instruction; it is a token which is removed by ulp_process_macros_and_load function.

M_BXZ(label_num)
Macro: branch to label if ALU result is zero

This macro generates two ulp_insn_t values separated by a comma, and should be used when defining contents of ulp_insn_t arrays. First value is not a real instruction; it is a token which is removed by ulp_process_macros_and_load function.

M_BXF(label_num)
Macro: branch to label if ALU overflow

This macro generates two ulp_insn_t values separated by a comma, and should be used when defining contents of ulp_insn_t arrays. First value is not a real instruction; it is a token which is removed by ulp_process_macros_and_load function.

Defines

RTC_SLOW_MEM
RTC slow memory, 8k size

ULP（Ultra Low Power 超低功耗）协处理器是一种简单的有限状态机 (FSM)，可以在主处理器处于深度睡眠模式时，使用 ADC、温度传感器和外部 I2C 传感器执行测量操作。ULP 协处理器可以访问 RTC_SLOW_MEM 内存区域及 RTC_CNTL、RTC_IO、SARADC 外设中的寄存器。ULP 协处理器使用 32 位固定宽度的指令，32 位内存寻址，配备 4 个 16 位通用寄存器。

4.31.3 安装工具链

ULP 协处理器代码是用汇编语言编写的，并使用 binutils-esp32ulp 工具链 进行编译。

如果你已经按照快速入门指南 中的介绍安装好了 ESP-IDF 及其 CMake 构建系统，那么 ULP 工具链已经被默认安装到了你的开发环境中。

如果你的 ESP-IDF 仍在使用传统的基于 GNU Make 的构建系统，请参考*ULP 协处理器 (传统的 GNU Make)* 一文中的说明，完成工具链的安装。

4.31.4 编译 ULP 代码

若需要将 ULP 代码编译为某组件的一部分，则必须执行以下步骤：

1. 用汇编语言编写的 ULP 代码必须导入到一个或多个 *.S* 扩展文件中，且这些文件必须放在组件目录中一个独立的目录中，例如 *ulp/*。
2. 注册后从组件 CMakeLists.txt 中调用 `ulp_embed_binary` 示例如下：

```
...
idf_component_register()

set(ulp_app_name ulp_${COMPONENT_NAME})
set(ulp_s_sources ulp/ulp_assembly_source_file.S)
set(ulp_exp_dep_srcs "ulp_c_source_file.c")

ulp_embed_binary(${ulp_app_name} "${ulp_s_sources}" "${ulp_exp_dep_srcs}")
```

`ulp_embed_binary` 的第一个参数为 ULP 二进制文件命名。指定的此名称也用于生成的其他文件，如：ELF 文件、.map 文件、头文件和链接器导出文件。第二个参数指定 ULP 程序集源文件。最后，第三个参数指定组件源文件列表，其中包括被生成的头文件。此列表用以建立正确的依赖项，并确保在编译这些文件之前先创建生成的头文件。有关 ULP 应用程序生成的头文件等相关概念，请参考下文。

3. 使用常规方法（例如 *idf.py app*）编译应用程序
   在内部，构建系统将按照以下步骤编译 ULP 程序：
   1. **通过 C 预处理器运行每个程序集文件 (foo.S)**。此步骤在组件编译目录中生成预处理的程序集文件 (foo.ulp.S)，同时生成依赖文件 (foo.ulp.d)。

2. **通过汇编器运行预处理过的汇编源码**。 此步骤会生成目标文件 (foo.ulp.o) 和清单 (foo.ulp.lst)。清单文件仅用于调试，不用于编译进程的后续步骤。
3. **通过 C 预处理器运行链接器脚本模板**。 模板位于 `components/ulp/ld` 目录中。
4. **将目标文件链接到 ELF 输出文件** (`ulp_app_name.elf`)。此步骤生成的.map 文件 (`ulp_app_name.map`) 默认用于调试。
5. **将 ELF 文件中的内容转储为二进制文件** (`ulp_app_name.bin`)，以便嵌入到应用程序中。
6. 使用 `esp32ulp-elf-nm` 在 ELF 文件中 **生成全局符号列表** (`ulp_app_name.sym`)。
7. **创建 LD 导出脚本和头文件** (`ulp_app_name.ld` 和 `ulp_app_name.h`)，包含来自 `ulp_app_name.sym` 的符号。此步骤可借助 `esp32ulp_mapgen.py` 工具来完成。
8. **将生成的二进制文件添加到要嵌入应用程序的二进制文件列表中**。

4.31.5 访问 ULP 程序变量

在 ULP 程序中定义的全局符号也可以在主程序中使用。

例如，ULP 程序可以定义 `measurement_count` 变量，此变量可以定义程序从深度睡眠中唤醒芯片之前需要进行的 ADC 测量的次数:

```
                        .global measurement_count
measurement_count:      .long 0

                        /* later, use measurement_count */
                        move r3, measurement_count
                        ld r3, r3, 0
```

主程序需要在启动 ULP 程序之前初始化 `measurement_count` 变量，构建系统通过生成定义 ULP 编程中全局符号的 `${ULP_APP_NAME}.h` 和 `${ULP_APP_NAME}.ld` 文件实现上述操作。这些文件包含了在 ULP 程序中定义的所有全局符号，文件以 `ulp_` 开头。

头文件包含对此类符号的声明:

```
extern uint32_t ulp_measurement_count;
```

注意，所有符号（包括变量、数组、函数）均被声明为 `uint32_t`。对于函数和数组，先获取符号地址，然后转换为适当的类型。

生成的链接器脚本文件定义了 RTC_SLOW_MEM 中的符号位置:

```
PROVIDE ( ulp_measurement_count = 0x50000060 );
```

如果要从主程序访问 ULP 程序变量，应先使用 `include` 语句包含生成的头文件，这样，就可以像访问常规变量一样访问 ulp 程序变量。操作如下:

```
#include "ulp_app_name.h"

// later
void init_ulp_vars() {
    ulp_measurement_count = 64;
}
```

注意，ULP 程序在 RTC 内存中只能使用 32 位字的低 16 位，因为寄存器是 16 位的，并且不具备从字的高位加载的指令。

同样，ULP 储存指令将寄存器值写入 32 位字的低 16 位中。高 16 位写入的值取决于储存指令的地址，因此在读取 ULP 写的变量时，主应用程序需要屏蔽高 16 位，例如:

```
printf("Last measurement value: %d\n", ulp_last_measurement & UINT16_MAX);
```

4.31.6 启动 ULP 程序

要运行 ULP 程序，主应用程序需要调用 `ulp_load_binary` 函数将 ULP 程序加载到 RTC 内存中，然后调用 `ulp_run` 函数，启动 ULP 程序。

注意，在 menuconfig 中必须启用 “Enable Ultra Low Power (ULP) Coprocessor” 选项，以便为 ULP 预留内存。”RTC slow memory reserved for coprocessor” 选项设置的值必须足够储存 ULP 代码和数据。如果应用程序组件包含多个 ULP 程序，则 RTC 内存必须足以容纳最大的程序。

每个 ULP 程序均以二进制 BLOB 的形式嵌入到 ESP-IDF 应用程序中。应用程序可以引用此 BLOB，并以下面的方式加载此 BLOB（假设 ULP_APP_NAME 已被定义为 `ulp_app_name`）：

```
extern const uint8_t bin_start[] asm("_binary_ulp_app_name_bin_start");
extern const uint8_t bin_end[]   asm("_binary_ulp_app_name_bin_end");

void start_ulp_program() {
    ESP_ERROR_CHECK( ulp_load_binary(
        0 /* load address, set to 0 when using default linker scripts */,
        bin_start,
        (bin_end - bin_start) / sizeof(uint32_t)) );
}
```

esp_err_t **ulp_load_binary**(uint32_t *load_addr*, **const** uint8_t **program_binary*, size_t *program_size*)

Load ULP program binary into RTC memory.

ULP program binary should have the following format (all values little-endian):

1. MAGIC, (value 0x00706c75, 4 bytes)
2. TEXT_OFFSET, offset of .text section from binary start (2 bytes)
3. TEXT_SIZE, size of .text section (2 bytes)
4. DATA_SIZE, size of .data section (2 bytes)
5. BSS_SIZE, size of .bss section (2 bytes)
6. (TEXT_OFFSET - 12) bytes of arbitrary data (will not be loaded into RTC memory)
7. .text section
8. .data section

Linker script in components/ulp/ld/esp32.ulp.ld produces ELF files which correspond to this format. This linker script produces binaries with load_addr == 0.

Return

- ESP_OK on success
- ESP_ERR_INVALID_ARG if load_addr is out of range
- ESP_ERR_INVALID_SIZE if program_size doesn’ t match (TEXT_OFFSET + TEXT_SIZE + DATA_SIZE)
- ESP_ERR_NOT_SUPPORTED if the magic number is incorrect

Parameters

- `load_addr`: address where the program should be loaded, expressed in 32-bit words
- `program_binary`: pointer to program binary
- `program_size`: size of the program binary

一旦上述程序加载到 RTC 内存后，应用程序即可启动此程序，并将入口点的地址传递给 `ulp_run` 函数:

```
ESP_ERROR_CHECK( ulp_run(&ulp_entry - RTC_SLOW_MEM) );
```

esp_err_t **ulp_run**(uint32_t *entry_point*)

Run the program loaded into RTC memory.

Return ESP_OK on success

Parameters

- `entry_point`: entry point, expressed in 32-bit words

上述生成的头文件 `${ULP_APP_NAME}.h` 声明了入口点符号。在 ULP 应用程序的汇编源代码中，此符号必须标记为 `.global`:

```
        .global entry
entry:
        /* code starts here */
```

4.31.7 ESP32 ULP 程序流

ESP32 ULP 协处理器由定时器启动，而调用 ulp_run 则可启动此定时器。定时器为 RTC_SLOW_CLK 的 Tick 事件计数（默认情况下，Tick 由内部 150 KHz RC 振荡器生成）。使用 SENS_ULP_CP_SLEEP_CYCx_REG 寄存器 (x = 0..4) 设置 Tick 数值。第一次启动 ULP 时，使用 SENS_ULP_CP_SLEEP_CYC0_REG 设置定时器 Tick 数值，之后，ULP 程序可以使用 sleep 指令来选择另一个 SENS_ULP_CP_SLEEP_CYCx_REG 寄存器。

此应用程序可以调用 ulp_set_wakeup_period 函数来设置 ULP 定时器周期值 (SENS_ULP_CP_SLEEP_CYCx_REG, x = 0..4)。

esp_err_t **ulp_set_wakeup_period**(size_t *period_index*, uint32_t *period_us*)

Set one of ULP wakeup period values.

ULP coprocessor starts running the program when the wakeup timer counts up to a given value (called period). There are 5 period values which can be programmed into SENS_ULP_CP_SLEEP_CYCx_REG registers, x = 0..4 for ESP32, and one period value which can be programmed into RTC_CNTL_ULP_CP_TIMER_1_REG register for ESP32-S2. By default, for ESP32, wakeup timer will use the period set into SENS_ULP_CP_SLEEP_CYC0_REG, i.e. period number 0. ULP program code can use SLEEP instruction to select which of the SENS_ULP_CP_SLEEP_CYCx_REG should be used for subsequent wakeups.

However, please note that SLEEP instruction issued (from ULP program) while the system is in deep sleep mode does not have effect, and sleep cycle count 0 is used.

For ESP32-s2 the SLEEP instruction not exist. Instead a WAKE instruction will be used.

Note The ULP FSM requires two clock cycles to wakeup before being able to run the program. Then additional 16 cycles are reserved after wakeup waiting until the 8M clock is stable. The FSM also requires two more clock cycles to go to sleep after the program execution is halted. The minimum wakeup period that may be set up for the ULP is equal to the total number of cycles spent on the above internal tasks. For a default configuration of the ULP running at 150kHz it makes about 133us.

Return

- ESP_OK on success
- ESP_ERR_INVALID_ARG if period_index is out of range

Parameters

- period_index: wakeup period setting number (0 - 4)
- period_us: wakeup period, us

一旦定时器计数到 SENS_ULP_CP_SLEEP_CYCx_REG 寄存器设定的 Tick 数值，ULP 协处理器就会启动，并调用 ulp_run 的入口点开始运行程序。

程序保持运行，直到遇到 halt 指令或非法指令。一旦程序停止，ULP 协处理器电源关闭，定时器再次启动。

如果想禁用定时器（有效防止 ULP 程序再次运行），可在 ULP 代码或主程序中清除 RTC_CNTL_STATE0_REG 寄存器中的 RTC_CNTL_ULP_CP_SLP_TIMER_EN 位。

4.32 ULP 协处理器 (传统的 GNU Make)

注解： ESP-IDF V4.0 及之后版本的默认构建系统为 CMake。本文档主要针对之前基于 GNU Make 的传统构建系统。请注意，未来，我们可能不会继续支持基于 GNU Make 的构建系统。

ULP（Ultra Low Power 超低功耗）协处理器是一种简单的有限状态机 (FSM)，可以在主处理器处于深度睡眠模式时，使用 ADC、温度传感器和外部 I2C 传感器执行测量操作。ULP 协处理器可以访问

RTC_SLOW_MEM 内存区域及 RTC_CNTL、RTC_IO、SARADC 等外设寄存器。ULP 协处理器使用 32 位固定宽度的指令，32 位内存寻址，配备 4 个 16 位通用寄存器。

4.32.1 安装工具链

ULP 协处理器代码是用汇编语言编写的，并使用 *binutils-esp32ulp toolchain* 进行编译。

1. 从 https://github.com/espressif/binutils-esp32ulp/releases 网站下载预编译的最新版本工具链二进制文件。
2. 将工具链提取至目录中，向工具链的 `bin/` 目录中添加路径至 `PATH` 环境变量中。

4.32.2 编译 ULP 代码

若需要将 ULP 代码编译为某组件的一部分，则必须执行以下步骤：

1. 用汇编语言编写的 ULP 代码必须导入到一个或多个 *.S* 扩展文件中，且这些文件必须放在组件目录中一个独立的目录中，例如 *ulp/*。
2. 修改组件 makefile，添加下列参数：

```
ULP_APP_NAME ?= ulp_$(COMPONENT_NAME)
ULP_S_SOURCES = $(COMPONENT_PATH)/ulp/ulp_source_file.S
ULP_EXP_DEP_OBJECTS := main.o
include $(IDF_PATH)/components/ulp/component_ulp_common.mk
```

   代码解释如下：

   ULP_APP_NAME 为生成的 ULP 应用程序命名，不带扩展名。此名称用于 ULP 应用程序的构建输出：ELF 文件、map 文件、二进制文件、生成的头文件和链接器导出文件。

   ULP_S_SOURCES 设置要传递给 ULP 汇编器的程序集文件列表。列表中的路径须是绝对路径，即以 `$(COMPONENT_PATH)` 开头的路径。如果列表中需列出多个文件，可使用函数 `$(addprefix)`。因为路径与组件构建目录相关，因而不需前置。

   ULP_EXP_DEP_OBJECTS 设置组件中目标文件名称的列表，其中包含生成的头文件。此列表用以建立正确的依赖项，并确保在此类文件被编译前生成头文件。ULP 应用程序头文件的定义请见下文。

   include $(IDF_PATH)/components/ulp/component_ulp_common.mk 包含常见的 ULP 编译步骤。为 ULP 目标文件、ELF 文件、二进制文件等定义编译目标。
3. 使用常规方法（例如 `idf.py build` 或 `idf.py app`）编译应用程序

   在编译过程中，构建系统将按照以下步骤编译 ULP 程序：

   1. **通过 C 预处理器运行每个程序集文件 (foo.S)**。此步骤在组件编译目录中生成预处理的程序集文件 (foo.ulp.pS)，同时生成依赖文件 (foo.ulp.d)。
   2. **通过汇编器运行预处理过的汇编源码**。此步骤会生成目标文件 (foo.ulp.o) 和清单文件 (foo.ulp.lst)。生成的清单文件用于调试，不用于构建过程的后续步骤。
   3. **通过 C 预处理器运行链接器脚本模板**。模版位于 components/ulp/ld 目录中。
   4. **将目标文件链接到 ELF 输出文件** (ulp_app_name.elf)。此步骤生成的.map 文件 (ulp_app_name.map) 可能会用于调试。
   5. **将 ELF 文件中的内容转储为二进制文件** (ulp_app_name.bin)，以便嵌入到应用程序中。
   6. **使用 esp32ulp-elf-nm 在 ELF 文件中生成全局符号列表** (ulp_app_name.sym)。
   7. **创建 LD 导出脚本和头文件** (ulp_app_name.ld 和 ulp_app_name.h)，包含来自 ulp_app_name.sym 的符号。此步骤通过 esp32ulp_mapgen.py 工具来完成。
   8. **将生成的二进制文件添加到要嵌入应用程序的二进制文件列表中**。

4.32.3 访问 ULP 程序变量

在 ULP 程序中定义的全局符号也可以在主程序中使用。

例如，ULP 程序可以定义 `measurement_count` 变量，此变量规定了芯片从深度睡眠模式唤醒之前，程序需要进行 ADC 测量的次数：

```
                        .global measurement_count
measurement_count:      .long 0

                        /* later, use measurement_count */
                        move r3, measurement_count
                        ld r3, r3, 0
```

主程序需要在启动 ULP 程序之前初始化 measurement_count 变量，构建系统通过生成定义 ULP 程序中全局符号的 $(ULP_APP_NAME).h 和 $(ULP_APP_NAME).ld 文件，可以实现上述操作；这些文件包含了 ULP 程序中所有全局符号，文件名以 ulp_ 开头。

头文件包含对此类符号的声明:

```
extern uint32_t ulp_measurement_count;
```

注意，所有符号（包括变量、数组、函数）均被声明为 uint32_t。对于函数和数组，先获取符号地址，然后转换为适当的类型。

生成的链接器脚本文件定义了符号在 RTC_SLOW_MEM 中的位置:

```
PROVIDE ( ulp_measurement_count = 0x50000060 );
```

如果要从主程序访问 ULP 程序变量，应先使用 include 语句包含生成的头文件，这样，就可以像访问常规变量一样访问 ulp 程序变量。操作如下:

```
#include "ulp_app_name.h"

// later
void init_ulp_vars() {
    ulp_measurement_count = 64;
}
```

注意，ULP 程序只能使用 RTC 内存中 32 位字的低 16 位，因为寄存器是 16 位的，并且不存在从字的高位加载的指令。

同样，ULP 储存指令将寄存器值写入 32 位字的低 16 位中。写入高 16 位的值取决于存储指令的地址，因此在读取 ULP 写的变量时，主应用程序需要屏蔽高 16 位，例如:

```
printf("Last measurement value: %d\n", ulp_last_measurement & UINT16_MAX);
```

4.32.4 启动 ULP 程序

要运行 ULP 程序，主应用程序需要调用 ulp_load_binary 函数将 ULP 程序加载到 RTC 内存中，然后调用 ulp_run 函数，启动 ULP 程序。

注意，在 menuconfig 中必须启用 “Enable Ultra Low Power (ULP) Coprocessor” 选项，以便为 ULP 预留内存。”RTC slow memory reserved for coprocessor” 选项设置的值必须足够储存 ULP 代码和数据。如果应用程序组件包含多个 ULP 程序，则 RTC 内存必须足以容纳最大的程序。

每个 ULP 程序均以二进制 BLOB 的形式嵌入到 ESP-IDF 应用程序中。应用程序可以引用此 BLOB，并以下面的方式加载此 BLOB （假设 ULP_APP_NAME 已被定义为 ulp_app_name）：

```
extern const uint8_t bin_start[] asm("_binary_ulp_app_name_bin_start");
extern const uint8_t bin_end[]   asm("_binary_ulp_app_name_bin_end");

void start_ulp_program() {
    ESP_ERROR_CHECK( ulp_load_binary(
        0 /* load address, set to 0 when using default linker scripts */,
        bin_start,
        (bin_end - bin_start) / sizeof(uint32_t)) );
}
```

esp_err_t **ulp_load_binary**(uint32_t *load_addr*, **const** uint8_t **program_binary*, size_t *program_size*)

Load ULP program binary into RTC memory.

ULP program binary should have the following format (all values little-endian):

1. MAGIC, (value 0x00706c75, 4 bytes)
2. TEXT_OFFSET, offset of .text section from binary start (2 bytes)
3. TEXT_SIZE, size of .text section (2 bytes)
4. DATA_SIZE, size of .data section (2 bytes)
5. BSS_SIZE, size of .bss section (2 bytes)
6. (TEXT_OFFSET - 12) bytes of arbitrary data (will not be loaded into RTC memory)
7. .text section
8. .data section

Linker script in components/ulp/ld/esp32.ulp.ld produces ELF files which correspond to this format. This linker script produces binaries with load_addr == 0.

Return

- ESP_OK on success
- ESP_ERR_INVALID_ARG if load_addr is out of range
- ESP_ERR_INVALID_SIZE if program_size doesn't match (TEXT_OFFSET + TEXT_SIZE + DATA_SIZE)
- ESP_ERR_NOT_SUPPORTED if the magic number is incorrect

Parameters

- `load_addr`: address where the program should be loaded, expressed in 32-bit words
- `program_binary`: pointer to program binary
- `program_size`: size of the program binary

一旦上述程序加载到 RTC 内存后，应用程序即可启动此程序，并将入口点的地址传递给 `ulp_run` 函数:

```
ESP_ERROR_CHECK( ulp_run(&ulp_entry - RTC_SLOW_MEM) );
```

esp_err_t **ulp_run**(uint32_t *entry_point*)

Run the program loaded into RTC memory.

Return ESP_OK on success

Parameters

- `entry_point`: entry point, expressed in 32-bit words

上述生成的头文件 `$(ULP_APP_NAME).h` 声明了入口点符号。在 ULP 应用程序的汇编源代码中，此符号必须标记为 `.global`:

```
        .global entry
entry:
        /* code starts here */
```

4.32.5 ULP 程序流

ULP 协处理器由定时器启动，而调用 `ulp_run` 则可启动此定时器。定时器为 RTC_SLOW_CLK 的 Tick 事件计数（默认情况下，Tick 由内部 150 kHz 晶振器生成）。使用 `SENS_ULP_CP_SLEEP_CYCx_REG` 寄存器 (x = 0..4) 设置 Tick 数值。第一次启动 ULP 时，使用 `SENS_ULP_CP_SLEEP_CYC0_REG` 设置定时器 Tick 数值，之后，ULP 程序可以使用 `sleep` 指令来另外选择 `SENS_ULP_CP_SLEEP_CYCx_REG` 寄存器。

此应用程序可以调用 `ulp_set_wakeup_period` 函数来设置 ULP 定时器周期值 (SENS_ULP_CP_SLEEP_CYCx_REG, x = 0..4)。

esp_err_t **ulp_set_wakeup_period**(size_t *period_index*, uint32_t *period_us*)

Set one of ULP wakeup period values.

ULP coprocessor starts running the program when the wakeup timer counts up to a given value (called period). There are 5 period values which can be programmed into SENS_ULP_CP_SLEEP_CYCx_REG registers, x =

0..4 for ESP32, and one period value which can be programmed into RTC_CNTL_ULP_CP_TIMER_1_REG register for ESP32-S2. By default, for ESP32, wakeup timer will use the period set into SENS_ULP_CP_SLEEP_CYC0_REG, i.e. period number 0. ULP program code can use SLEEP instruction to select which of the SENS_ULP_CP_SLEEP_CYCx_REG should be used for subsequent wakeups.

However, please note that SLEEP instruction issued (from ULP program) while the system is in deep sleep mode does not have effect, and sleep cycle count 0 is used.

For ESP32-s2 the SLEEP instruction not exist. Instead a WAKE instruction will be used.

Note The ULP FSM requires two clock cycles to wakeup before being able to run the program. Then additional 16 cycles are reserved after wakeup waiting until the 8M clock is stable. The FSM also requires two more clock cycles to go to sleep after the program execution is halted. The minimum wakeup period that may be set up for the ULP is equal to the total number of cycles spent on the above internal tasks. For a default configuration of the ULP running at 150kHz it makes about 133us.

Return

- ESP_OK on success
- ESP_ERR_INVALID_ARG if period_index is out of range

Parameters

- `period_index`: wakeup period setting number (0 - 4)
- `period_us`: wakeup period, us

一旦定时器数值达到在所选的 `SENS_ULP_CP_SLEEP_CYCx_REG` 寄存器中设置的数值，ULP 协处理器就会启动，并调用 `ulp_run` 的入口点，开始运行程序。

程序保持运行，直到遇到 `halt` 指令或非法指令才停止。一旦程序停止，ULP 协处理器电源关闭，定时器再次启动。

如果想禁用定时器（禁用定时器可有效防止 ULP 程序再次运行），请清除 `RTC_CNTL_STATE0_REG` 寄存器中的 `RTC_CNTL_ULP_CP_SLP_TIMER_EN` 位，可在 ULP 代码或主程序中进行以上操作。

4.33 ESP32 中的单元测试

ESP-IDF 中附带了一个基于 `Unity` 的单元测试应用程序框架，且所有的单元测试用例分别保存在 ESP-IDF 仓库中每个组件的 `test` 子目录中。

4.33.1 添加常规测试用例

单元测试被添加在相应组件的 `test` 子目录中，测试用例写在 C 文件中，一个 C 文件可以包含多个测试用例。测试文件的名字要以“test”开头。

测试文件需要包含 `unity.h` 头文件，此外还需要包含待测试 C 模块需要的头文件。

测试用例需要通过 C 文件中特定的函数来添加，如下所示：

```
TEST_CASE("test name", "[module name]"
{
        // 在这里添加测试用例
}
```

- 第一个参数是字符串，用来描述当前测试。
- 第二个参数是字符串，用方括号中的标识符来表示，标识符用来对相关测试或具有特定属性的测试进行分组。

注解： 没有必要在每个测试用例中使用 `UNITY_BEGIN()` 和 `UNITY_END()` 来声明主函数的区域，`unity_platform.c` 会自动调用 `UNITY_BEGIN()`，然后运行测试用例，最后调用 `UNITY_END()`。

`test` 子目录应包含：ref：`组件 CMakeLists.txt <component-directories>`，因为他们本身就是一种组件。ESP-IDF 使用了 `unity` 测试框架，需要将其指定为组件的依赖项。通常，组件：ref：`需要手动指定待编译的`

源文件 *<cmake-file-globbing>*; 但是，对于测试组件来说，这个要求被放宽为仅建议将参数 SRC_DIRS 用于 idf_component_register。

总的来说，test 子目录下最小的 CMakeLists.txt 文件可能如下所示:

```
idf_component_register(SRC_DIRS "."
                       INCLUDE_DIRS "."
                       REQUIRES unity)
```

更多关于如何在 Unity 下编写测试用例的信息，请查阅 http://www.throwtheswitch.org/unity 。

4.33.2 添加多设备测试用例

常规测试用例会在一个 DUT（Device Under Test，在试设备）上执行. 但是，那些需要互相通信的组件（比如 GPIO、SPI）需要与其通信的其他设备，因此不能使用常规测试用例进行测试。多设备测试用例包括写入多个测试函数，并在多个 DUT 进行运行测试。

以下是一个多设备测试用例:

```
void gpio_master_test()
{
    gpio_config_t slave_config = {
            .pin_bit_mask = 1 << MASTER_GPIO_PIN,
            .mode = GPIO_MODE_INPUT,
    };
    gpio_config(&slave_config);
    unity_wait_for_signal("output high level");
    TEST_ASSERT(gpio_get_level(MASTER_GPIO_PIN) == 1);
}

void gpio_slave_test()
{
    gpio_config_t master_config = {
            .pin_bit_mask = 1 << SLAVE_GPIO_PIN,
            .mode = GPIO_MODE_OUTPUT,
    };
    gpio_config(&master_config);
    gpio_set_level(SLAVE_GPIO_PIN, 1);
    unity_send_signal("output high level");
}

TEST_CASE_MULTIPLE_DEVICES("gpio multiple devices test example", "[driver]", gpio_
↪master_test, gpio_slave_test);
```

宏 TEST_CASE_MULTIPLE_DEVICES 用来声明多设备测试用例，

- 第一个参数指定测试用例的名字。
- 第二个参数是测试用例的描述。
- 从第三个参数开始，可以指定最多 5 个测试函数，每个函数都是单独运行在一个 DUT 上的测试入口点。

在不同的 DUT 上运行的测试用例，通常会要求它们之间进行同步。我们提供 unity_wait_for_signal 和 unity_send_signal 这两个函数来使用 UART 去支持同步操作。如上例中的场景，slave 应该在在 master 设置好 GPIO 电平后再去读取 GPIO 电平，DUT 的 UART 终端会打印提示信息，并要求用户进行交互。

DUT1（master）终端:

```
Waiting for signal: [output high level]!
Please press "Enter" key once any board send this signal.
```

DUT2（slave）终端:

```
Send signal: [output high level]!
```

一旦 DUT2 发送了该信号，您需要在 DUT1 的终端按回车键，然后 DUT1 会从 `unity_wait_for_signal` 函数中解除阻塞，并开始更改 GPIO 的电平。

4.33.3 添加多阶段测试用例

常规的测试用例无需重启就会结束（或者仅需要检查是否发生了重启），可有些时候我们想在某些特定类型的重启事件后运行指定的测试代码，例如，我们想在深度睡眠唤醒后检查复位的原因是否正确。首先我们需要出发深度睡眠复位事件，然后检查复位的原因。为了实现这一点，我们可以定义多阶段测试用例来将这些测试函数组合在一起。

```
static void trigger_deepsleep(void)
{
    esp_sleep_enable_timer_wakeup(2000);
    esp_deep_sleep_start();
}

void check_deepsleep_reset_reason()
{
    RESET_REASON reason = rtc_get_reset_reason(0);
    TEST_ASSERT(reason == DEEPSLEEP_RESET);
}

TEST_CASE_MULTIPLE_STAGES("reset reason check for deepsleep", "[esp32]", trigger_
↪deepsleep, check_deepsleep_reset_reason);
```

多阶段测试用例向用户呈现了一组测试函数，它需要用户进行交互（选择用例并选择不同的阶段）来运行。

4.33.4 应用于不同芯片的单元测试

某些测试（尤其与硬件相关的）无法在所有的芯片上执行。请参照本节让你的单元测试只在其中一部分芯片上执行。

1. 使用宏 `!(TEMPORARY_)DISABLED_FOR_TARGETS()` 保护你的测试代码，并将其放于原来的位置，或者放在另外准备以功能区分的文件。但请确保所有这些文件都会被编译器处理到。例：

   ```
   #if !TEMPORARY_DISABLED_FOR_TARGETS(ESP32, ESP8266) TEST_CASE("a test that is␣
   ↪not ready for esp32 and esp8266 yet", "[]")
   {
   }
   #endif //!TEMPORARY_DISABLED_FOR_TARGETS(ESP32, ESP8266)
   ```

   一旦你需要其中一个测试在某个芯片上被编译，只需要修改禁止的芯片列表。我们更鼓励使用一些通用的概念（能在 `soc_caps.h` 中被清楚描述）来禁止某些单元测试。如果你已经这样做，但有一些测试还没有在新的芯片版本中被调试通过，请同时使用上述两种方法，当调试完成后再移除 `!(TEMPORARY_)DISABLED_FOR_TARGETS()` 。例：

   ```
   #if SOC_SDIO_SLAVE_SUPPORTED
   #if !TEMPORARY_DISABLED_FOR_TARGETS(ESP64)
   TEST_CASE("a sdio slave tests that is not ready for esp64 yet", "[sdio_slave]")
   {
       //available for esp32 now, and will be available for esp64 in the future
   }
   #endif //!TEMPORARY_DISABLED_FOR_TARGETS(ESP64)
   #endif //SOC_SDIO_SLAVE_SUPPORTED
   ```

2. 对于某些你绝对肯定不可能被支持的测试（例如，芯片根本没有该外设），使用 DISABLED_FOR_TARGETS 来禁止该测试；对于其他只是临时性需要关闭的（例如，没有 runner 资源等），使用 TEMPORARY_DISABLED_FOR_TARGETS 来暂时关闭该测试。

请勿继续使用一些旧的禁止单元测试在一些芯片上执行的做法，因为他们具有明显的坏处：

- 请勿将测试代码放在 test/芯片版本目录下面，然后用 CMakeLists.txt 来选择其中一个进行编译。这是因为测试代码比实现代码更容易被复用。如果你将一些代码放在 test/esp32 目录下来避免 esp32s2 芯片执行它，一旦你需要在新的芯片（比如 esp32s3 ）中启用该测试，你会发现这种结构非常难以保持代码的整洁。
- 请勿继续使用 CONFIG_IDF_TARGET_xxx 宏来禁止某些测试在一些芯片上编译。这种方法会让被禁止的测试项目难以追踪和重新打开。并且，相比于白名单式的 #if CONFIG_IDF_TARGET_xxx ，黑名单式的 #if !disabled 能避免新芯片引入时，这些测试被自动关闭。
  但对于用于测试的一些实现，#if CONFIG_IDF_TARGET_xxx 仍可用于给不同芯片版本选择实现代码。测试项目和测试实现区分如下：
  - 测试项目：某些你会在一些芯片上执行，而在另外一些上跳过的项目，例如：
    有三个测试项目 SD 1-bit 、SD 4-bit 和 SDSPI 。对于不支持 SD Host 外设的 ESP32-S2 芯片，只有 SDSPI 一个项目需要被执行。
  - 测试实现：某些代码永远会发生，但采取不同的做法。例如：
    ESP8266 芯片没有 SDIO_PKT_LEN 寄存器。如果在测试过程中需要获取从机准备好的数据长度，你可以用 #if CONFIG_IDF_TARGET_ 宏来选择读取该长度的不同方法实现。
    但请注意避免使用 #else 宏。这样当新芯片被引入时，测试就会在编译阶段失败，提示维护者去显示选择一个正确的测试实现。

4.33.5 编译单元测试程序

按照 esp-idf 顶层目录的 README 文件中的说明进行操作，请确保 IDF_PATH 环境变量已经被设置指向了 esp-idf 的顶层目录。

切换到 tools/unit-test-app 目录下进行配置和编译：

- idf.py menuconfig - 配置单元测试程序。
- idf.py -T all build - 编译单元测试程序，测试每个组件 test 子目录下的用例。
- idf.py -T "xxx yyy" build - 编译单元测试程序，测试指定的组件。
- idf.py -T all -E "xxx yyy" build - 编译单元测试程序，测试所有（除开指定）的组件。（例如 idf.py -T all -E "ulp mbedtls" build - 编译所有的单元测试，不包括 ulp 和 mbedtls 组件。）

当编译完成时，它会打印出烧写芯片的指令。您只需要运行 idf.py flash 即可烧写所有编译输出的文件。

您还可以运行 idf.py -T all flash 或者 idf.py -T xxx flash 来编译并烧写，所有需要的文件都会在烧写之前自动重新编译。

使用 menuconfig 可以设置烧写测试程序所使用的串口。

4.33.6 运行单元测试

烧写完成后重启 ESP32，它将启动单元测试程序。

当单元测试应用程序空闲时，输入回车键，它会打印出测试菜单，其中包含所有的测试项目。

```
Here's the test menu, pick your combo:
(1)     "esp_ota_begin() verifies arguments" [ota]
(2)     "esp_ota_get_next_update_partition logic" [ota]
(3)     "Verify bootloader image in flash" [bootloader_support]
(4)     "Verify unit test app image" [bootloader_support]
(5)     "can use new and delete" [cxx]
(6)     "can call virtual functions" [cxx]
(7)     "can use static initializers for non-POD types" [cxx]
```

(下页继续)

(续上页)

```
(8)     "can use std::vector" [cxx]
(9)     "static initialization guards work as expected" [cxx]
(10)    "global initializers run in the correct order" [cxx]
(11)    "before scheduler has started, static initializers work correctly" [cxx]
(12)    "adc2 work with wifi" [adc]
(13)    "gpio master/slave test example" [ignore][misc][test_env=UT_T2_1][multi_
↪device]
        (1)     "gpio_master_test"
        (2)     "gpio_slave_test"
(14)    "SPI Master clockdiv calculation routines" [spi]
(15)    "SPI Master test" [spi][ignore]
(16)    "SPI Master test, interaction of multiple devs" [spi][ignore]
(17)    "SPI Master no response when switch from host1 (SPI2) to host2 (SPI3)"␣
↪[spi]
(18)    "SPI Master DMA test, TX and RX in different regions" [spi]
(19)    "SPI Master DMA test: length, start, not aligned" [spi]
(20)    "reset reason check for deepsleep" [esp32][test_env=UT_T2_1][multi_stage]
        (1)     "trigger_deepsleep"
        (2)     "check_deepsleep_reset_reason"
```

常规测试用例会打印用例名字和描述，主从测试用例还会打印子菜单（已注册的测试函数的名字）。

可以输入以下任意一项来运行测试用例：

- 引号中的测试用例的名字，运行单个测试用例。
- 测试用例的序号，运行单个测试用例。
- 方括号中的模块名字，运行指定模块所有的测试用例。
- 星号，运行所有测试用例。

`[multi_device]` 和 `[multi_stage]` 标签告诉测试运行者该用例是多设备测试还是多阶段测试。这些标签由 `TEST_CASE_MULTIPLE_STAGES` 和 `TEST_CASE_MULTIPLE_DEVICES` 宏自动生成。

一旦选择了多设备测试用例，它会打印一个子菜单：

```
Running gpio master/slave test example...
gpio master/slave test example
        (1)     "gpio_master_test"
        (2)     "gpio_slave_test"
```

您需要输入数字以选择在 DUT 上运行的测试。

与多设备测试用例相似，多阶段测试用例也会打印子菜单：

```
Running reset reason check for deepsleep...
reset reason check for deepsleep
        (1)     "trigger_deepsleep"
        (2)     "check_deepsleep_reset_reason"
```

第一次执行此用例时，输入 `1` 来运行第一阶段（触发深度睡眠）。在重启 DUT 并再次选择运行此用例后，输入 `2` 来运行第二阶段。只有在最后一个阶段通过并且之前所有的阶段都成功触发了复位的情况下，该测试才算通过。

4.34 单元测试（传统的 GNU Make）

注解： ESP-IDF V4.0 及之后版本的默认构建系统为 CMake。本文档主要针对之前基于 GNU Make 的传统构建系统。请注意，未来，我们可能不会继续支持基于 GNU Make 的构建系统。

ESP-IDF 中附带了一个基于 `Unity` 的单元测试应用程序框架，且所有的单元测试用例分别保存在 ESP-IDF 仓库中每个组件的 `test` 子目录中。

4.34.1 添加常规测试用例

单元测试被添加在相应组件的 test 子目录中，测试用例写在 C 文件中，一个 C 文件可以包含多个测试用例。测试文件的名字要以“test”开头。

测试文件需要包含 unity.h 头文件，此外还需要包含待测试 C 模块需要的头文件。

测试用例需要通过 C 文件中特定的函数来添加，如下所示：

```
TEST_CASE("test name", "[module name]"
{
        // 在这里添加测试用例
}
```

第一个参数是字符串，用来描述当前测试。第二个参数是字符串，用方括号中的标识符来表示，标识符用来对相关测试或具有特定属性的测试进行分组。

注解： 没有必要在每个测试用例中使用 UNITY_BEGIN() 和 UNITY_END() 来声明主函数的区域，unity_platform.c 会自动调用 UNITY_BEGIN()，然后运行测试用例，最后调用 UNITY_END()。

每一个 测试子目录下都需包含 component.mk 文件，并且其中至少要包含如下的一行代码：

```
COMPONENT_ADD_LDFLAGS = -Wl,--whole-archive -l$(COMPONENT_NAME) -Wl,--no-whole-
↪archive
```

更多关于如何在 Unity 下编写测试用例的信息，请查阅 http://www.throwtheswitch.org/unity 。

4.34.2 添加多设备测试用例

常规测试用例会在一个 DUT（Device Under Test，在试设备）上执行. 但是，那些需要互相通信的组件（比如 GPIO、SPI）需要与其通信的其他设备，因此不能使用常规测试用例进行测试。多设备测试用例包括写入多个测试函数，并在多个 DUT 进行运行测试。

以下是一个多设备测试用例：

```
void gpio_master_test()
{
    gpio_config_t slave_config = {
            .pin_bit_mask = 1 << MASTER_GPIO_PIN,
            .mode = GPIO_MODE_INPUT,
    };
    gpio_config(&slave_config);
    unity_wait_for_signal("output high level");
    TEST_ASSERT(gpio_get_level(MASTER_GPIO_PIN) == 1);
}

void gpio_slave_test()
{
    gpio_config_t master_config = {
            .pin_bit_mask = 1 << SLAVE_GPIO_PIN,
            .mode = GPIO_MODE_OUTPUT,
    };
    gpio_config(&master_config);
    gpio_set_level(SLAVE_GPIO_PIN, 1);
    unity_send_signal("output high level");
}

TEST_CASE_MULTIPLE_DEVICES("gpio multiple devices test example", "[driver]", gpio_
↪master_test, gpio_slave_test);
```

宏 TEST_CASE_MULTIPLE_DEVICES 用来声明多设备测试用例，

- 第一个参数指定测试用例的名字。
- 第二个参数是测试用例的描述。
- 从第三个参数开始，可以指定最多 5 个测试函数，每个函数都是单独运行在一个 DUT 上的测试入口点。

在不同的 DUT 上运行的测试用例，通常会要求它们之间进行同步。我们提供 `unity_wait_for_signal` 和 `unity_send_signal` 这两个函数来使用 UART 去支持同步操作。如上例中的场景，slave 应该在在 master 设置好 GPIO 电平后再去读取 GPIO 电平，DUT 的 UART 终端会打印提示信息，并要求用户进行交互。

DUT1（master）终端：

```
Waiting for signal: [output high level]!
Please press "Enter" key once any board send this signal.
```

DUT2（slave）终端：

```
Send signal: [output high level]!
```

一旦 DUT2 发送了该信号，您需要在 DUT1 按回车键，然后 DUT1 会从 `unity_wait_for_signal` 函数中解除阻塞，并开始更改 GPIO 的电平。

信号也可以用来在不同设备之间传递参数。例如，DUT1 希望得到 DUT2 的 MAC 地址来进行蓝牙连接，这时，可使用 `unity_wait_for_signal_param` 以及 `unity_send_signal_param`。

DUT1 终端:

```
Waiting for signal: [dut2 mac address]!
Please input parameter value from any board send this signal and press "Enter" key.
```

DUT2 终端:

```
Send signal: [dut2 mac address][10:20:30:40:50:60]!
```

一旦 DUT2 发送信号，您需要在 DUT1 输入 `10:20:30:40:50:60` 并按回车键，然后 DUT1 会获取 DUT2 的 MAC 地址字符串，并从 `unity_wait_for_signal_param` 函数中解除阻塞，然后蓝牙连接 DUT2。

4.34.3 添加多阶段测试用例

常规的测试用例无需重启就会结束（或者仅需要检查是否发生了重启），可有些时候我们想在某些特定类型的重启事件后运行指定的测试代码，例如，我们想在深度睡眠唤醒后检查复位的原因是否正确。首先我们需要出发深度睡眠复位事件，然后检查复位的原因。为了实现这一点，我们可以定义多阶段测试用例来将这些测试函数组合在一起。

```
static void trigger_deepsleep(void)
{
    esp_sleep_enable_timer_wakeup(2000);
    esp_deep_sleep_start();
}

void check_deepsleep_reset_reason()
{
    RESET_REASON reason = rtc_get_reset_reason(0);
    TEST_ASSERT(reason == DEEPSLEEP_RESET);
}

TEST_CASE_MULTIPLE_STAGES("reset reason check for deepsleep", "[esp32]", trigger_
↪deepsleep, check_deepsleep_reset_reason);
```

多阶段测试用例向用户呈现了一组测试函数，它需要用户进行交互（选择用例并选择不同的阶段）来运行。

4.34.4 编译单元测试程序

按照 esp-idf 顶层目录的 README 文件中的说明进行操作，请确保 IDF_PATH 环境变量已经被设置指向了 esp-idf 的顶层目录。

切换到 tools/unit-test-app 目录下进行配置和编译：

- make menuconfig - 配置单元测试程序。
- make TESTS_ALL=1 - 编译单元测试程序，测试每个组件 test 子目录下的用例。
- make TEST_COMPONENTS='xxx' - 编译单元测试程序，测试指定的组件。
- make TESTS_ALL=1 TEST_EXCLUDE_COMPONENTS='xxx' - 编译单元测试程序，测试所有（除开指定）的组件。（例如 make TESTS_ALL=1 TEST_EXCLUDE_COMPONENTS='ulp mbedtls' - 编译所有的单元测试，不包括 ulp 和 mbedtls 组件。）

当编译完成时，它会打印出烧写芯片的指令。您只需要运行 make flash 即可烧写所有编译输出的文件。

您还可以运行 make flash TESTS_ALL=1 或者 make TEST_COMPONENTS='xxx' 来编译并烧写，所有需要的文件都会在烧写之前自动重新编译。

使用 menuconfig 可以设置烧写测试程序所使用的串口。

4.34.5 运行单元测试

烧写完成后重启 ESP32，它将启动单元测试程序。

当单元测试应用程序空闲时，输入回车键，它会打印出测试菜单，其中包含所有的测试项目。

```
Here's the test menu, pick your combo:
(1)     "esp_ota_begin() verifies arguments" [ota]
(2)     "esp_ota_get_next_update_partition logic" [ota]
(3)     "Verify bootloader image in flash" [bootloader_support]
(4)     "Verify unit test app image" [bootloader_support]
(5)     "can use new and delete" [cxx]
(6)     "can call virtual functions" [cxx]
(7)     "can use static initializers for non-POD types" [cxx]
(8)     "can use std::vector" [cxx]
(9)     "static initialization guards work as expected" [cxx]
(10)    "global initializers run in the correct order" [cxx]
(11)    "before scheduler has started, static initializers work correctly" [cxx]
(12)    "adc2 work with wifi" [adc]
(13)    "gpio master/slave test example" [ignore][misc][test_env=UT_T2_1][multi_
↪device]
        (1)     "gpio_master_test"
        (2)     "gpio_slave_test"
(14)    "SPI Master clockdiv calculation routines" [spi]
(15)    "SPI Master test" [spi][ignore]
(16)    "SPI Master test, interaction of multiple devs" [spi][ignore]
(17)    "SPI Master no response when switch from host1 (SPI2) to host2 (SPI3)"␣
↪[spi]
(18)    "SPI Master DMA test, TX and RX in different regions" [spi]
(19)    "SPI Master DMA test: length, start, not aligned" [spi]
(20)    "reset reason check for deepsleep" [esp32][test_env=UT_T2_1][multi_stage]
        (1)     "trigger_deepsleep"
        (2)     "check_deepsleep_reset_reason"
```

常规测试用例会打印用例名字和描述，主从测试用例还会打印子菜单（已注册的测试函数的名字）。

可以输入以下任意一项来运行测试用例：

- 引号中的测试用例的名字（例如 "esp_ota_begin() verifies arguments"），运行单个测试用例。
- 测试用例的序号（例如 1），运行单个测试用例。
- 方括号中的模组名称（例如 [cxx]），运行指定模组的所有的测试用例。

- 星号 (*)，运行所有测试用例。

[multi_device] 和 [multi_stage] 标签告诉测试运行者该用例是多设备测试还是多阶段测试。这些标签由 TEST_CASE_MULTIPLE_STAGES 和 TEST_CASE_MULTIPLE_DEVICES 宏自动生成。

一旦选择了多设备测试用例，它会打印一个子菜单：

```
Running gpio master/slave test example...
gpio master/slave test example
        (1)     "gpio_master_test"
        (2)     "gpio_slave_test"
```

您需要输入数字以选择在 DUT 上运行的测试。

与多设备测试用例相似，多阶段测试用例也会打印子菜单：

```
Running reset reason check for deepsleep...
reset reason check for deepsleep
        (1)     "trigger_deepsleep"
        (2)     "check_deepsleep_reset_reason"
```

第一次执行此用例时，输入 1 来运行第一阶段（触发深度睡眠）。在重启 DUT 并再次选择运行此用例后，输入 2 来运行第二阶段。只有在最后一个阶段通过并且之前所有的阶段都成功触发了复位的情况下，该测试才算通过。

4.35 Wi-Fi 驱动程序

4.35.1 ESP32 Wi-Fi 功能列表

- 支持 4 个虚拟接口，即 STA、AP、Sniffer 和 reserved。
- 支持仅 station 模式、仅 AP 模式、station/AP 共存模式
- 支持使用 IEEE 802.11B、IEEE 802.11G、IEEE 802.11N 和 API 配置协议模式
- 支持 WPA/WPA2/WPA3/WPA2-企业版和 WPS
- 支持 AMSDU、AMPDU、HT40、QoS 以及其它主要功能
- 支持 Modem-sleep
- 支持乐鑫专属协议，可实现 **1 km** 数据通信量
- 空中数据传输最高可达 20 MBit/s TCP 吞吐量和 30 MBit/s UDP 吞吐量
- 支持 Sniffer
- 支持快速扫描和全信道扫描
- 支持多个天线
- 支持获取信道状态信息

4.35.2 如何编写 Wi-Fi 应用程序

准备工作

一般来说，要编写自己的 Wi-Fi 应用程序，最高效的方式是先选择一个相似的应用程序示例，然后将其中可用的部分移植到自己的项目中。如果您希望编写一个强健的 Wi-Fi 应用程序，强烈建议您在开始之前先阅读本文。**非强制要求，请依个人情况而定**。

本文将补充说明 Wi-Fi API 和 Wi-Fi 示例的相关信息，重点描述使用 Wi-Fi API 的原则、当前 Wi-Fi API 实现的限制以及使用 Wi-Fi 时的常见错误。同时，本文还介绍了 Wi-Fi 驱动程序的一些设计细节。建议您选择一个示例 example 进行参考。

设置 Wi-Fi 编译时选项

请参阅 *Wi-Fi menuconfig*。

Wi-Fi 初始化

请参阅*ESP32 Wi-Fi station 一般情况*、*ESP32 Wi-Fi AP 一般情况*。

启动/连接 Wi-Fi

请参阅*ESP32 Wi-Fi station 一般情况*、*ESP32 Wi-Fi AP 一般情况*。

事件处理

通常，在晴好环境下编写代码难度并不大，如*WIFI_EVENT_STA_START*、*WIFI_EVENT_STA_CONNECTED* 中所述。难度在于如何在阴翳的困难环境下编写代码，如*WIFI_EVENT_STA_DISCONNECTED* 中所述。能否在后者情况下完美地解决各类事件冲突，是编写一个强健的 Wi-Fi 应用程序的根本。请参阅*ESP32 Wi-Fi station 一般情况*、*ESP32 Wi-Fi AP 一般情况*。另可参阅 ESP-IDF 中的事件处理概述 Event Handling。

编写错误恢复程序

除了在能在比较差的环境下工作，错误恢复能力也对一个强健的 Wi-Fi 应用程序至关重要。请参阅*ESP32 Wi-Fi API 错误代码*。

4.35.3 ESP32 Wi-Fi API 错误代码

所有 ESP32 Wi-Fi API 都有定义好的返回值，即错误代码。这些错误代码可分类为：

- 无错误，例如：返回值 ESP_OK 代表 API 成功返回
- 可恢复错误，例如：ESP_ERR_NO_MEM
- 不可恢复的非关键性错误
- 不可恢复的关键性错误

一个错误是否为关键性取决于其 API 和应用场景，并且由 API 用户定义。

要使用 Wi-Fi API 编写一个强健的应用程序，根本原则便是要时刻检查错误代码并编写相应的错误处理代码。 一般来说，错误处理代码可用于解决：

- 可恢复错误，您可以编写一个可恢复错误处理代码解决该类错误。例如，当`esp_wifi_start()` 返回 ESP_ERR_NO_MEM 时，调用可恢复错误处理代码 vTaskDelay 可以获取几微秒的重试时间。
- 不可恢复非关键性错误，打印错误代码可以帮助您更好地处理该类错误。
- 不可恢复关键性错误，可使用“assert”语句处理该类错误。例如，如果`esp_wifi_set_mode()` 返回 ESP_ERR_WIFI_NOT_INIT，该值意为`esp_wifi_init()` 未成功初始化 Wi-Fi 驱动程序。您可以在应用程序开发阶段非常快速地检测到此类错误。

在 esp_err.h 中，ESP_ERROR_CHECK 负责检查返回值。这是一个较为常见的错误处理代码，可在应用程序开发阶段作为默认的错误处理代码。但是，我们强烈建议 API 的使用者自己编写错误处理代码。

4.35.4 初始化 ESP32 Wi-Fi API 参数

初始化 API 的结构参数时，应遵循以下两种方式之一：

- 设置该参数的所有字段
- 先使用 get API 获取当前配置，然后只设置特定于应用程序的字段

初始化或获取整个结构这一步至关重要，因为大多数情况下，返回值 0 意味着程序使用了默认值。未来，我们将会在该结构中加入更多字段，并将这些字段初始化为 0，确保即使 IDF 版本升级后您的应用程序依然能够正常运行。

4.35.5 ESP32 Wi-Fi 编程模型

ESP32 Wi-Fi 编程模型如下图所示：

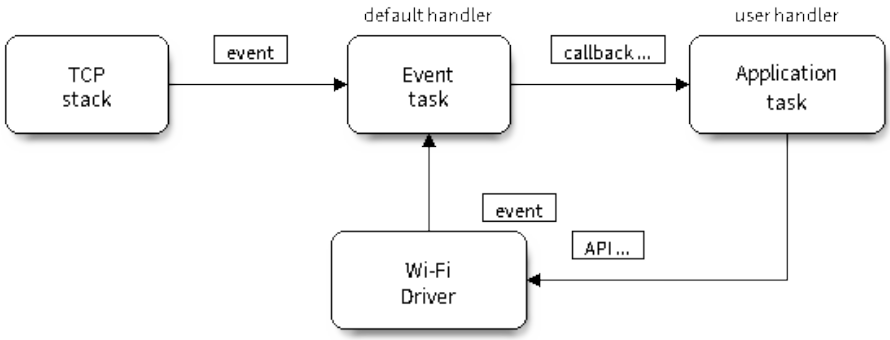

图 50: Wi-Fi 编程模型

Wi-Fi 驱动程序可以看作是一个无法感知上层代码（如 TCP/IP 堆栈、应用程序任务、事件任务等）的黑匣子。通常，应用程序任务（代码）负责调用 *Wi-Fi 驱动程序 APIs* 来初始化 Wi-Fi，并在必要时处理 Wi-Fi 事件。然后，Wi-Fi 驱动程序接收并处理 API 数据，并在应用程序中插入事件。

Wi-Fi 事件处理是在 *esp_event 库* 的基础上进行的。Wi-Fi 驱动程序将事件发送至默认事件循环，应用程序便可以使用 `esp_event_handler_register()` 中的回调函数处理这些事件。除此之外，*esp_netif 组件* 也负责处理 Wi-Fi 事件，并产生一系列默认行为。例如，当 Wi-Fi station 连接至一个 AP 时，esp_netif 将自动开启 DHCP 客户端服务（系统默认）。

4.35.6 ESP32 Wi-Fi 事件描述

WIFI_EVENT_WIFI_READY

Wi-Fi 驱动程序永远不会生成此事件，因此，应用程序的事件回调函数可忽略此事件。在未来的版本中，此事件可能会被移除。

WIFI_EVENT_SCAN_DONE

扫描完成事件，由 `esp_wifi_scan_start()` 函数触发，将在以下情况下产生：

- 扫描已完成，例如：Wi-Fi 已成功找到目标 AP 或已扫描所有信道。
- 当前扫描因函数 `esp_wifi_scan_stop()` 而终止。
- 在当前扫描完成之前调用了函数 `esp_wifi_scan_start()`。此时，新的扫描将覆盖当前扫描过程，并生成一个扫描完成事件。

以下情况下将不会产生扫描完成事件：

- 当前扫描被阻止。
- 当前扫描是由函数 `esp_wifi_connect()` 触发的。

接收到此事件后，事件任务暂不做任何响应。首先，应用程序的事件回调函数需调用 `esp_wifi_scan_get_ap_num()` 和 `esp_wifi_scan_get_ap_records()` 获取已扫描的 AP 列表，然后触发 Wi-Fi 驱动程序释放在扫描过程中占用的内存空间（**切记该步骤**）。更多详细信息，请参阅 *ESP32 Wi-Fi 扫描*。

WIFI_EVENT_STA_START

如果调用函数*esp_wifi_start()* 后接收到返回值 ESP_OK，且当前 Wi-Fi 处于 station 或 station/AP 共存模式，则将产生此事件。接收到此事件后，事件任务将初始化 LwIP 网络接口 (netif)。通常，应用程序的事件回调函数需调用*esp_wifi_connect()* 来连接已配置的 AP。

WIFI_EVENT_STA_STOP

如果调用函数*esp_wifi_stop()* 后接收到返回值 ESP_OK，且当前 Wi-Fi 处于 station 或 station/AP 共存模式，则将产生此事件。接收到此事件后，事件任务将进行释放 station IP 地址、终止 DHCP 客户端服务、移除 TCP/UDP 相关连接并清除 LwIP station netif 等动作。此时，应用程序的事件回调函数通常不需做任何响应。

WIFI_EVENT_STA_CONNECTED

如果调用函数*esp_wifi_connect()* 后接收到返回值 ESP_OK，且 station 已成功连接目标 AP，则将产生此连接事件。接收到此事件后，事件任务将启动 DHCP 客户端服务并开始获取 IP 地址。此时，Wi-Fi 驱动程序已准备就绪，可发送和接收数据。如果您的应用程序不依赖于 LwIP（即 IP 地址），则此刻便可以开始应用程序开发工作。但是，如果您的应用程序需基于 LwIP 进行，则还需等待 *got ip* 事件发生后才可开始。

WIFI_EVENT_STA_DISCONNECTED

此事件将在以下情况下产生：

- 调用了函数*esp_wifi_disconnect()*、*esp_wifi_stop()* 或*esp_wifi_deinit()*，且 Wi-Fi station 已成功连接至 AP。
- 调用了函数*esp_wifi_connect()*，但 Wi-Fi 驱动程序因为某些原因未能成功连接至 AP，例如：未扫描到目标 AP、验证超时等。或存在多个 SSID 相同的 AP，station 无法连接所有已找到的 AP，也将产生该事件。
- Wi-Fi 连接因为某些原因而中断，例如：station 连续多次丢失 N beacon、AP 脱离 station 连接、AP 验证模式改变等。

接收到此事件后，事件任务的默认动作为：

- 关闭 station 的 LwIP netif。
- 通知 LwIP 任务清除导致所有套接字状态错误的 UDP/TCP 连接。针对基于套接字编写的应用程序，其回调函数可以在接收到此事件时（如有必要）关闭并重新创建所有套接字。

应用程序处理此事件最常用的方法为：调用函数*esp_wifi_connect()* 重新连接 Wi-Fi。但是，如果此事件是由函数*esp_wifi_disconnect()* 引发的，则应用程序不应调用*esp_wifi_connect()* 来重新连接。应用程序须明确区分此事件的引发原因，因为某些情况下应使用其它更好的方式进行重新连接。请参阅*Wi-Fi 重新连接* 和*连接 Wi-Fi 时扫描*。

需要注意的另一点是：接收到此事件后，LwIP 的默认动作为终止所有 TCP 套接字连接。大多数情况下，该动作不会造成影响。但对某些特殊应用程序可能除外。例如：

- 应用程序创建一个了 TCP 连接，以维护每 60 秒发送一次的应用程序级、保持活动状态的数据。
- 由于某些原因，Wi-Fi 连接被切断并引发了 *WIFI_EVENT_STA_DISCONNECTED* 事件。根据当前实现，此时所有 TCP 连接都将被移除，且保持活动的套接字将处于错误的状态中。但是，由于应用程序设计者认为网络层 **不应**考虑这个 Wi-Fi 层的错误，因此应用程序不会关闭套接字。
- 5 秒后，因为在应用程序的事件回调函数中调用了*esp_wifi_connect()*，Wi-Fi 连接恢复。**同时，station 连接至同一个 AP 并获得与之前相同的 IPV4 地址**。
- 60 秒后，当应用程序发送具有保持活动状态的套接字的数据时，套接字将返回错误，应用程序将关闭套接字并在必要时重新创建。

在上述场景中，理想状态下应用程序套接字和网络层将不会受到影响，因为在此过程中 Wi-Fi 连接只是短暂地断开然后快速恢复。应用程序可通过 LwIP menuconfig 启动“IP 改变时保持 TCP 连接”的功能。

IP_EVENT_STA_GOT_IP

当 DHCP 客户端成功从 DHCP 服务器获取 IPV4 地址或 IPV4 地址发生改变时，将引发此事件。此事件意味着应用程序一切就绪，可以开始任务（如：创建套接字）。

IPV4 地址可能由于以下原因而发生改变：

- DHCP 客户端无法重新获取/绑定 IPV4 地址，且 station 的 IPV4 重置为 0。
- DHCP 客户端重新绑定了其它地址。
- 静态配置的 IPV4 地址已发生改变。

函数 `ip_event_got_ip_t` 中的字段 `ip_change` 说明了 IPV4 地址是否发生改变。

套接字的状态是基于 IPV4 地址的，这意味着，如果 IPV4 地址发生改变，则所有与此 IPV4 相关的套接字都将变为异常。接收到此事件后，应用程序需关闭所有套接字，并在 IPV4 变为有效地址时重新创建应用程序。

IP_EVENT_GOT_IP6

当 IPV6 SLAAC 支持自动为 ESP32 配置一个地址，或 ESP32 地址发生改变时，将引发此事件。此事件意味着应用程序一切就绪，可以开始任务（如：创建套接字）。

IP_EVENT_STA_LOST_IP

当 IPV4 地址失效时，将引发此事件。

此事件不会在 Wi-Fi 断连后立刻出现。Wi-Fi 连接断开后，首先将启动一个 IPV4 地址丢失计时器，如果 station 在该计时器超时之前成功获取了 IPV4 地址，则不会发生此事件。否则，此事件将在计时器超时时发生。

一般来说，应用程序可忽略此事件。这只是一个调试事件，主要使应用程序获知 IPV4 地址已丢失。

WIFI_EVENT_AP_START

与 *WIFI_EVENT_STA_START* 事件相似。

WIFI_EVENT_AP_STOP

与 *WIFI_EVENT_STA_STOP* 事件相似。

WIFI_EVENT_AP_STACONNECTED

每当有一个 station 成功连接 ESP32 AP 时，将引发此事件。接收到此事件后，事件任务将不做任何响应，应用程序的回调函数也可忽略这一事件。但是，您可以在此时进行一些操作，例如：获取已连接 STA 的信息等。

WIFI_EVENT_AP_STADISCONNECTED

此事件将在以下情况下发生：

- 应用程序通过调用函数 *esp_wifi_disconnect()* 或 *esp_wifi_deauth_sta()* 手动断开 station 连接。
- Wi-Fi 驱动程序出于某些原因断开 station 连接，例如：AP 在过去 5 分钟（可通过函数 *esp_wifi_set_inactive_time()* 修改该时间）内未接收到任何数据包等。
- station 断开与 AP 之间的连接。

发生此事件时，事件任务将不做任何响应，但应用程序的事件回调函数需执行一些操作，例如：关闭与此 station 相关的套接字等。

WIFI_EVENT_AP_PROBEREQRECVED

默认情况下，此事件处于禁用状态，应用程序可以通过调用 API *esp_wifi_set_event_mask()* 启用。启用后，每当 AP 接收到 probe request 时都将引发此事件。

WIFI_EVENT_STA_BEACON_TIMEOUT

如果 station 在 inactive 时间内未收到所连接 AP 的 beacon，将发生 beacon 超时，将引发此事件。inactive 时间通过调用函数*esp_wifi_set_inactive_time()* 设置。

4.35.7 ESP32 Wi-Fi station 一般情况

下图为 station 模式下的宏观场景，其中包含不同阶段的具体描述：

1. Wi-Fi/LwIP 初始化阶段

- s1.1：主任务通过调用函数*esp_netif_init()* 创建一个 LwIP 核心任务，并初始化 LwIP 相关工作。
- s1.2：主任务通过调用函数*esp_event_loop_create()* 创建一个系统事件任务，并初始化应用程序事件的回调函数。在此情况下，该回调函数唯一的动作就是将事件中继到应用程序任务中。
- s1.3：主任务通过调用函数*esp_netif_create_default_wifi_ap()* 或*esp_netif_create_default_wifi_sta()* 创建有 TCP/IP 堆栈的默认网络接口实例绑定 station 或 AP。
- s1.4：主任务通过调用函数*esp_wifi_init()* 创建 Wi-Fi 驱动程序任务，并初始化 Wi-Fi 驱动程序。
- s1.5：主任务通过调用 OS API 创建应用程序任务。

推荐按照 s1.1 ~ s1.5 的步骤顺序针对基于 Wi-Fi/LwIP 的应用程序进行初始化。但这一顺序 **并非**强制，您可以在第 s1.1 步创建应用程序任务，然后在该应用程序任务中进行所有其它初始化操作。不过，如果您的应用程序任务依赖套接字，那么在初始化阶段创建应用程序任务可能并不适用。此时，您可以在接收到 IP 后再进行任务创建。

2. Wi-Fi 配置阶段

Wi-Fi 驱动程序初始化成功后，可以进入到配置阶段。该场景下，Wi-Fi 驱动程序处于 station 模式。因此，首先您需调用函数*esp_wifi_set_mode()* (WIFI_MODE_STA) 将 Wi-Fi 模式配置为 station 模式。可通过调用其它 esp_wifi_set_xxx API 进行更多设置，例如：协议模式、国家代码、带宽等。请参阅*ESP32 Wi-Fi 配置*。

一般情况下，我们会在建立 Wi-Fi 连接之前配置 Wi-Fi 驱动程序，但这 **并非**强制要求。也就是说，只要 Wi-Fi 驱动程序已成功初始化，您可以在任意阶段进行配置。但是，如果您的 Wi-Fi 在建立连接后不需要更改配置，则应先在此阶段完成配置。因为调用配置 API（例如*esp_wifi_set_protocol()*）将会导致 Wi-Fi 连接断开，为您的操作带来不便。

如果 menuconfig 已使能 Wi-Fi NVS flash，则不论当前阶段还是后续的 Wi-Fi 配置信息都将被存储至该 flash 中。那么，当主板上电/重新启动时，就不需从头开始配置 Wi-Fi 驱动程序。您只需调用函数 esp_wifi_get_xxx API 获取之前存储的配置信息。当然，如果不想使用之前的配置，您依然可以重新配置 Wi-Fi 驱动程序。

3. Wi-Fi 启动阶段

- s3.1：调用函数*esp_wifi_start()* 启动 Wi-Fi 驱动程序。
- s3.2：Wi-Fi 驱动程序将事件*WIFI_EVENT_STA_START* 发布到事件任务中，然后，事件任务将执行一些正常操作并调用应用程序的事件回调函数。

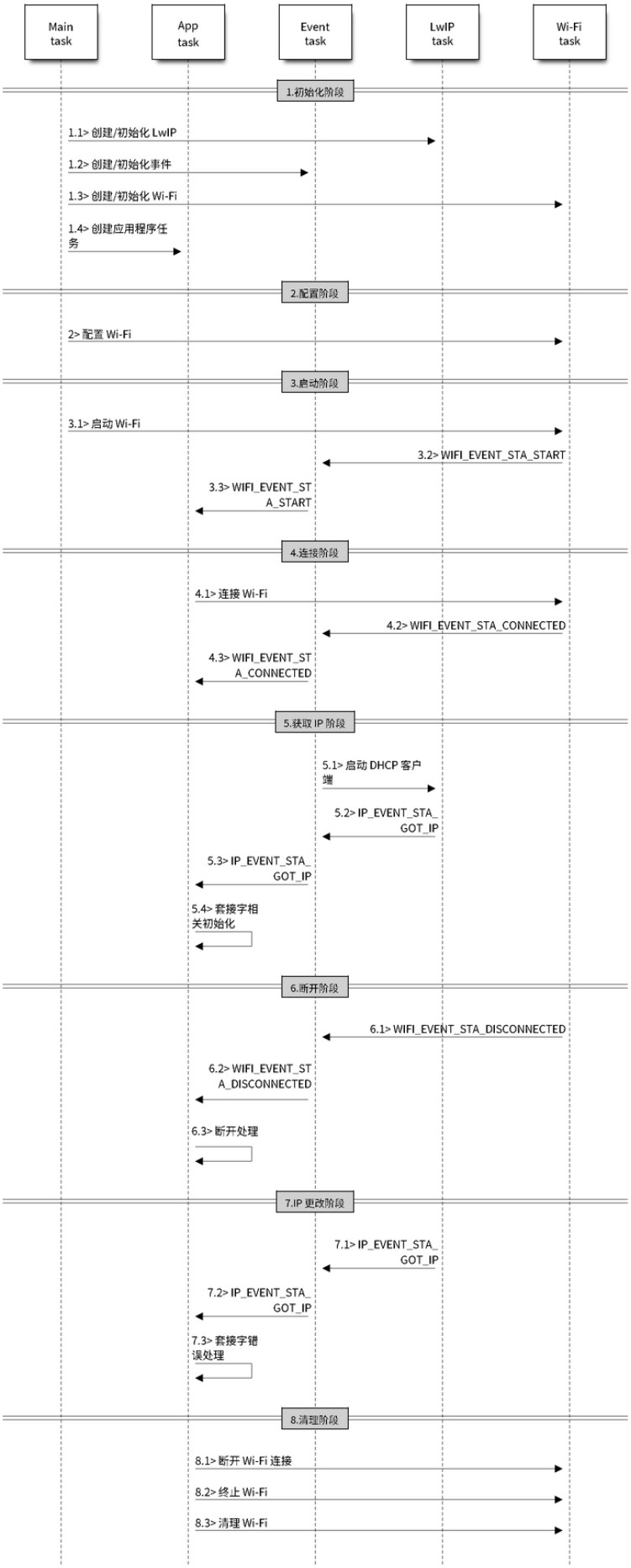

图 51: station 模式下 Wi-Fi 事件场景示例

- s3.3：应用程序的事件回调函数将事件*WIFI_EVENT_STA_START* 中继到应用程序任务中。推荐您此时调用函数`esp_wifi_connect()` 进行 Wi-Fi 连接。当然，您也可以等待在*WIFI_EVENT_STA_START* 事件发生后的其它阶段再调用此函数。

4. Wi-Fi 连接阶段

- s4.1：调用函数`esp_wifi_connect()` 后，Wi-Fi 驱动程序将启动内部扫描/连接过程。
- s4.2：如果内部扫描/连接过程成功，将产生*WIFI_EVENT_STA_CONNECTED* 事件。然后，事件任务将启动 DHCP 客户端服务，最终触发 DHCP 程序。
- s4.3：在此情况下，应用程序的事件回调函数会将*WIFI_EVENT_STA_CONNECTED* 事件中继到应用程序任务中。通常，应用程序不需进行操作，而您可以执行任何动作，例如：打印日志等。

步骤 s4.2 中 Wi-Fi 连接可能会由于某些原因而失败，例如：密码错误、未找到 AP 等。这种情况下，将引发*WIFI_EVENT_STA_DISCONNECTED* 事件并提示连接错误原因。有关如何处理中断 Wi-Fi 连接的事件，请参阅下文阶段 6 的描述。

5. Wi-Fi 获取 IP 阶段

- s5.1：一旦步骤 4.2 中的 DHCP 客户端初始化完成，Wi-Fi 驱动程序将进入 *获取 IP* 阶段。
- s5.2：如果 Wi-Fi 成功从 DHCP 服务器接收到 IP 地址，则将引发*IP_EVENT_STA_GOT_IP* 事件，事件任务将执行正常处理。
- s5.3：应用程序的事件回调函数将事件*IP_EVENT_STA_GOT_IP* 中继到应用程序任务中。对于那些基于 LwIP 构建的应用程序，此事件较为特殊，因为它意味着应用程序已准备就绪，可以开始任务，例如：创建 TCP/UDP 套接字等。此时较为容易犯的一个错误就是在接收到*IP_EVENT_STA_GOT_IP* 事件之前就初始化套接字。**切忌在接收到 IP 之前启动任何套接字相关操作**。

6. Wi-Fi 断开阶段

- s6.1：当 Wi-Fi 因为某些原因（例如：AP 掉电、RSSI 较弱等）连接中断时，将产生*WIFI_EVENT_STA_DISCONNECTED* 事件。此事件也可能在上文阶段 3 中发生。在这里，事件任务将通知 LwIP 任务清除/移除所有 UDP/TCP 连接。然后，所有应用程序套接字都将处于错误状态。也就是说，*WIFI_EVENT_STA_DISCONNECTED* 事件发生时，任何套接字都无法正常工作。
- s6.2：上述情况下，应用程序的事件回调函数会将*WIFI_EVENT_STA_DISCONNECTED* 事件中继到应用程序任务中。推荐您调用函数`esp_wifi_connect()` 重新连接 Wi-Fi，关闭所有套接字，并在必要时重新创建套接字。请参阅*WIFI_EVENT_STA_DISCONNECTED*。

7. Wi-Fi IP 更改阶段

- s7.1：如果 IP 地址发生更改，将引发*IP_EVENT_STA_GOT_IP* 事件，其中 “ip_change” 被置为 “true”。
- s7.2：**此事件对应用程序至关重要。这一事件发生时，适合关闭所有已创建的套接字并进行重新创建**。

8. Wi-Fi 清理阶段

- s8.1：调用函数`esp_wifi_disconnect()` 断开 Wi-Fi 连接。
- s8.2：调用函数`esp_wifi_stop()` 终止 Wi-Fi 驱动程序。
- s8.3：调用函数`esp_wifi_deinit()` 清理 Wi-Fi 驱动程序。

4.35.8 ESP32 Wi-Fi AP 一般情况

下图为 AP 模式下的宏观场景，其中包含不同阶段的具体描述：

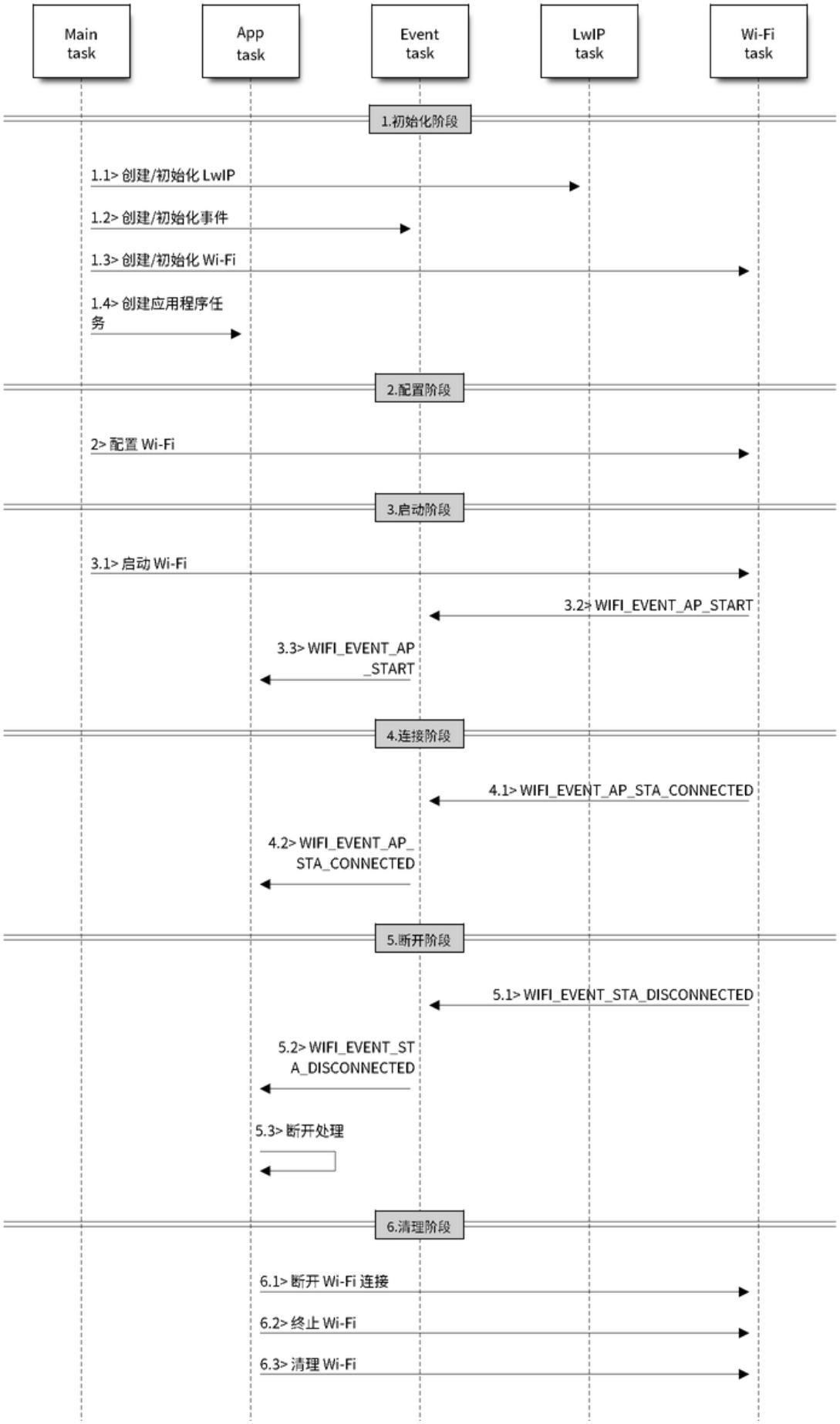

图 52: AP 模式下 Wi-Fi 事件场景示例

4.35.9 ESP32 Wi-Fi 扫描

目前，仅 station 或 station/AP 共存模式支持*esp_wifi_scan_start()* API。

扫描类型

模式	描述
主动扫描	通过发送 probe request 进行扫描。该模式为默认的扫描模式。
被动扫描	不发送 probe request。跳至某一特定信道并等待 beacon。应用程序可通过 wifi_scan_config_t 中的 scan_type 字段使能被动扫描。
前端扫描	在 station 模式下 Wi-Fi 未连接时，可进行前端扫描。Wi-Fi 驱动程序决定进行前端扫描还是后端扫描，应用程序无法配置这两种模式。
后端扫描	在 station 模式或 station/AP 共存模式下 Wi-Fi 已连接时，可进行后端扫描。Wi-Fi 驱动程序决定进行前端扫描还是后端扫描，应用程序无法配置这两种模式。
全信道扫描	扫描所有信道。wifi_scan_config_t 中的 channel 字段为 0 时，当前模式为全信道扫描。
特定信道扫描	仅扫描特定的信道。wifi_scan_config_t 中的 channel 字段为 1-14 时，当前模式为特定信道扫描。

上表中的扫描模式可以任意组合，因此共有 8 种不同扫描方式：

- 全信道后端主动扫描
- 全信道后端被动扫描
- 全信道前端主动扫描
- 全信道后端被动扫描
- 特定信道后端主动扫描
- 特定信道后端被动扫描
- 特定信道前端主动扫描
- 特定信道前端被动扫描

扫描配置

扫描类型与其他扫描属性通过函数*esp_wifi_scan_start()* 进行配置。下表详细描述了函数 wifi_scan_config_t 各字段信息。

字段	描述
ssid	如果该字段的值不为 NULL，则仅可扫描到具有相同 SSID 值的 AP。
bssid	如果该字段的值不为 NULL，则仅可扫描到具有相同 BSSID 值的 AP。
channel	如果该字段值为 0，将进行全信道扫描；反之，将针对特定信道进行扫描。
show_hidden	如果该字段值为 0，本次扫描将忽略具有隐藏 SSID 的 AP；反之，这些 AP 也会在扫描时被视为正常 AP。
scan_type	如果该字段值为为 WIFI_SCAN_TYPE_ACTIVE，则本次扫描为主动扫描；反之，将被视为被动扫描。
scan_time	该字段用于控制每个信道的扫描时间。 被动扫描时，scan_time.passive 字段负责为每个信道指定扫描时间。 主动扫描时，每个信道的扫描时间如下列表所示。其中，min 代表 scan_time_active_min，max 代表 scan_time_active_max。 • min=0, max=0：每个信道的扫描时间为 120 ms。 • min>0, max=0：每个信道的扫描时间为 120 ms。 • min=0, max>0：每个信道的扫描时间为 `max` ms。 • min>0, max>0：每个信道扫描的最短时间为 `min` ms。如果在这段时间内未找到 AP，将跳转至下一个信道。如这段时间内找到 AP，则该信道的扫描时间为 `max` ms。 如希望提升 Wi-Fi 扫描性能，则可修改上述两个参数。

调用 API *esp_wifi_set_config()* 可全局配置一些扫描属性，请参阅*station 基本配置*。

在所有信道中扫描全部 AP（前端）

场景：

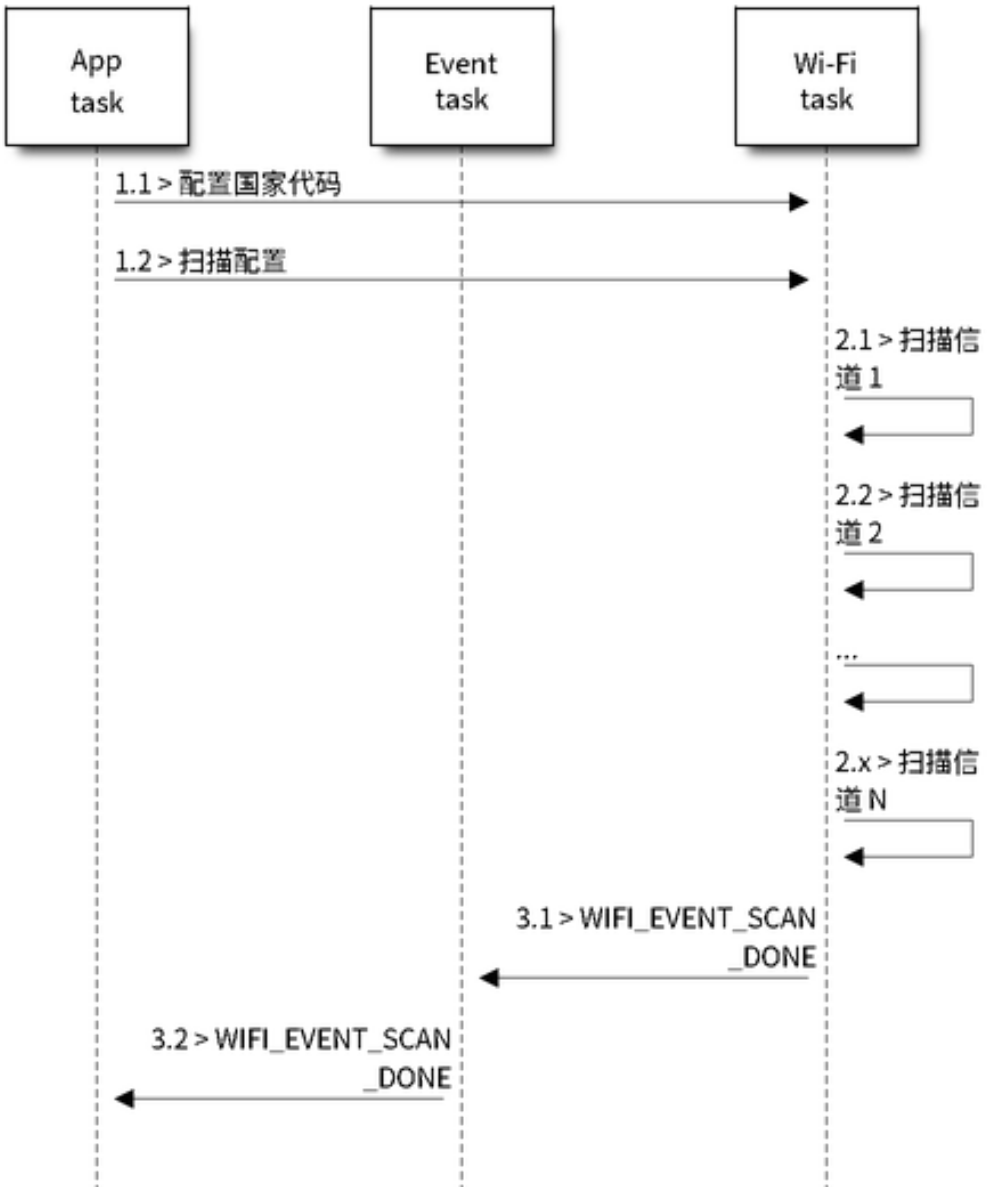

图 53: 所有 Wi-Fi 信道的前端扫描

上述场景中描述了全信道前端扫描过程。仅 station 模式支持前端扫描，该模式下 station 未连接任何 AP。前端扫描还是后端扫描完全由 Wi-Fi 驱动程序决定，应用程序无法配置这一模式。

详细描述：

扫描配置阶段

- s1.1：如果默认的国家信息有误，调用函数*esp_wifi_set_country()* 进行配置。请参阅*Wi-Fi 国家/地区代码*。
- s1.2：调用函数*esp_wifi_scan_start()* 配置扫描信息，可参阅*扫描配置*。该场景为全信道扫描，将 SSID/BSSID/channel 设置为 0 即可。

Wi-Fi 驱动程序内部扫描阶段

- s2.1：Wi-Fi 驱动程序切换至信道 1，此时的扫描类型为 WIFI_SCAN_TYPE_ACTIVE，同时发送一个 probe request。反之，Wi-Fi 将等待接收 AP beacon。Wi-Fi 驱动程序将在信道 1 停留一段时间。min/max 扫描时间中定义了 Wi-Fi 在信道 1 中停留的时间长短，默认为 120 ms。
- s2.2：Wi-Fi 驱动程序跳转至信道 2，并重复进行 s2.1 中的步骤。
- s2.3:Wi-Fi 驱动程序扫描最后的信道 N，N 的具体数值由步骤 s1.1 中配置的国家代码决定。

扫描完成后事件处理阶段

- s3.1：当所有信道扫描全部完成后，将产生*WIFI_EVENT_SCAN_DONE* 事件。
- s3.2：应用程序的事件回调函数告知应用程序任务已接收到*WIFI_EVENT_SCAN_DONE* 事件。调用函数`esp_wifi_scan_get_ap_num()` 获取在本次扫描中找到的 AP 数量。然后，分配出足够的事物槽，并调用函数`esp_wifi_scan_get_ap_records()` 获取 AP 记录。请注意，一旦调用`esp_wifi_scan_get_ap_records()`，Wi-Fi 驱动程序中的 AP 记录将被释放。但是，请不要在单个扫描完成事件中重复调用两次`esp_wifi_scan_get_ap_records()`。反之，如果扫描完成事件发生后未调用`esp_wifi_scan_get_ap_records()`，则 Wi-Fi 驱动程序中的 AP 记录不会被释放。因此，请务必确保调用函数`esp_wifi_scan_get_ap_records()`，且仅调用一次。

在所有信道上扫描全部 AP（后端）

场景：

上述场景为一次全信道后端扫描。与*在所有信道中扫描全部 AP（前端）* 相比，全信道后端扫描的不同之处在于：在跳至下一个信道之前，Wi-Fi 驱动程序会先返回主信道进行 30 ms 扫描，以便 Wi-Fi 连接有一定的时间发送/接收数据。

在所有信道中扫描特定 AP

场景：

该扫描过程与*在所有信道中扫描全部 AP（前端）* 相似。区别在于：

- s1.1：在步骤 1.2 中，目标 AP 将配置为 SSID/BSSID。
- s2.1 ~ s2.N：每当 Wi-Fi 驱动程序扫描某个 AP 时，它将检查该 AP 是否为目标 AP。如果本次扫描类型为 WIFI_FAST_SCAN，且确认已找到目标 AP，则将产生扫描完成事件，同时结束本次扫描；反之，扫描将继续。请注意，第一个扫描的信道可能不是信道 1，因为 Wi-Fi 驱动程序会优化扫描顺序。

如果有多个匹配目标 AP 信息的 AP，例如：碰巧扫描到两个 SSID 为“ap”的 AP。如果本次扫描类型为 WIFI_FAST_SCAN，则仅可找到第一个扫描到的“ap”；如果本次扫描类型为 WIFI_ALL_CHANNEL_SCAN，则两个“ap“都将被找到，且 station 将根据配置规则连接至其需要连接的“ap”，请参阅*station 基本配置*。

您可以在任意信道中扫描某个特定的 AP，或扫描该信道中的所有 AP。这两种扫描过程也较为相似。

在 Wi-Fi 连接模式下扫描

调用函数`esp_wifi_connect()` 后，Wi-Fi 驱动程序将首先尝试扫描已配置的 AP。Wi-Fi 连接模式下的扫描过程与*在所有信道中扫描特定 AP* 过程相同，但连接模式下扫描结束后将不会产生扫描完成事件。如果已找到目标 AP，则 Wi-Fi 驱动程序将开始 Wi-Fi 连接；反之，将产生*WIFI_EVENT_STA_DISCONNECTED* 事件。请参阅*在所有信道中扫描特定 AP*。

在禁用模式下扫描

如果函数`esp_wifi_scan_start()` 中的禁用参数为“true”，则本次扫描为禁用模式下的扫描。在该次扫描完成之前，应用程序任务都将被禁用。禁用模式下的扫描和正常扫描相似，不同之处在于，禁用模式下扫描完成之后将不会出现扫描完成事件。

图 54: 所有 Wi-Fi 信道的后端扫描

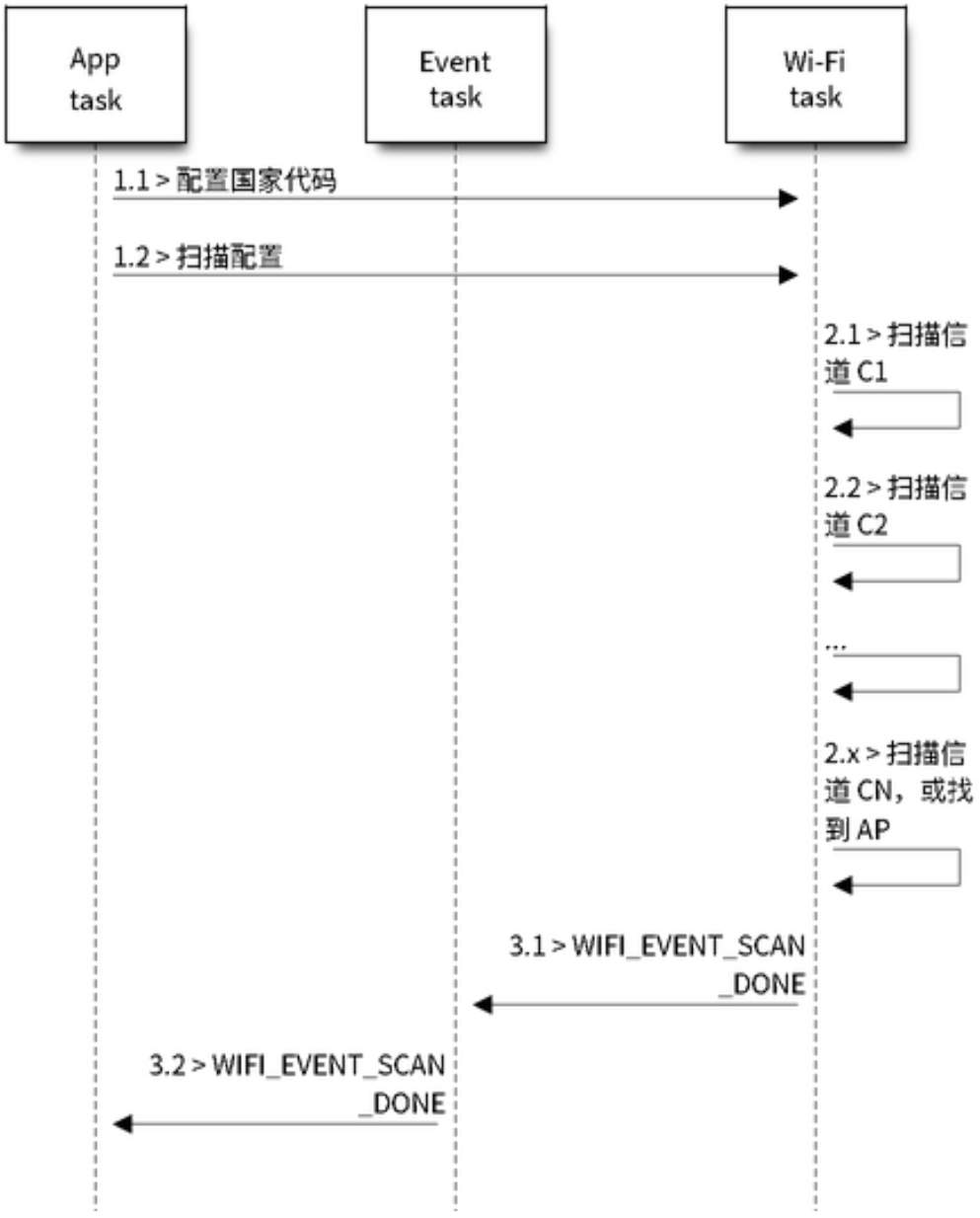

图 55: 扫描特定的 Wi-Fi 信道

并行扫描

有时，可能会有两个应用程序任务同时调用函数`esp_wifi_scan_start()`，或者某个应用程序任务在获取扫描完成事件之前再次调用了函数`esp_wifi_scan_start()`。这两种情况都有可能会发生。**但是，Wi-Fi 驱动程序并不足以支持多个并行的扫描。因此，应避免上述并行扫描。**随着 ESP32 的 Wi-Fi 功能不断提升，未来的版本中可能会增加并行扫描支持。

连接 Wi-Fi 时扫描

如果 Wi-Fi 正在连接，则调用函数`esp_wifi_scan_start()`后扫描将立即失败，因为 Wi-Fi 连接优先级高于扫描。如果扫描是因为 Wi-Fi 连接而失败的，此时推荐采取的策略为：等待一段时间后重试。因为一旦 Wi-Fi 连接完成后，扫描将立即成功。

但是，延时重试策略并非万无一失。试想以下场景：

- 如果 station 正在连接一个不存在的 AP，或正在使用错误的密码连接一个 AP，此时将产生事件*WIFI_EVENT_STA_DISCONNECTED*。
- 接收到断开连接事件后，应用程序调用函数`esp_wifi_connect()`进行重新连接。
- 而另一个应用程序任务（如，控制任务）调用了函数`esp_wifi_scan_start()`进行扫描。这种情况下，每一次扫描都会立即失败，因为 station 一直处于正在连接状态。
- 扫描失败后，应用程序将等待一段时间后进行重新扫描。

上述场景中的扫描永远不会成功，因为 Wi-Fi 一直处于正在连接过程中。因此，如果您的应用程序也可能发生相似的场景，那么就需要为其配置一个更佳的重新连接策略。例如：

- 应用程序可以定义一个连续重新连接次数的最大值，当重新连接的次数达到这个最大值时，立刻停止重新连接。
- 应用程序可以在首轮连续重新连接 N 次后立即进行重新连接，然后延时一段时间后再进行下一次重新连接。

可以给应用程序定义其特殊的重新连接策略，以防止扫描无法成功。请参阅*Wi-Fi 重新连接*。

4.35.10 ESP32 Wi-Fi station 连接场景

该场景仅针对在扫描阶段只找到一个目标 AP 的情况，对于多个相同 SSID AP 的情况，请参阅*找到多个 AP 时的 ESP32 Wi-Fi station 连接*。

通常，应用程序无需关心这一连接过程。如感兴趣，可参看下述简介。

场景：

扫描阶段

- s1.1：Wi-Fi 驱动程序开始在 “Wi-Fi 连接” 模式下扫描。详细信息请参阅*在 Wi-Fi 连接模式下扫描*。
- s1.2：如果未找到目标 AP，将产生*WIFI_EVENT_STA_DISCONNECTED* 事件，且原因代码为 WIFI_REASON_NO_AP_FOUND。请参阅*Wi-Fi 原因代码*。

认证阶段

- s2.1：发送认证请求数据包并使能认证计时器。
- s1.2：如果在认证计时器超时之前未接收到认证响应数据包，将产生*WIFI_EVENT_STA_DISCONNECTED* 事件，且原因代码为 WIFI_REASON_AUTH_EXPIRE。请参阅*Wi-Fi 原因代码*。
- s2.3：接收到认证响应数据包，且认证计时器终止。
- s2.4：AP 在响应中拒绝认证且产生*WIFI_EVENT_STA_DISCONNECTED* 事件，原因代码为 WIFI_REASON_AUTH_FAIL 或为 AP 指定的其它原因。请参阅*Wi-Fi 原因代码*。

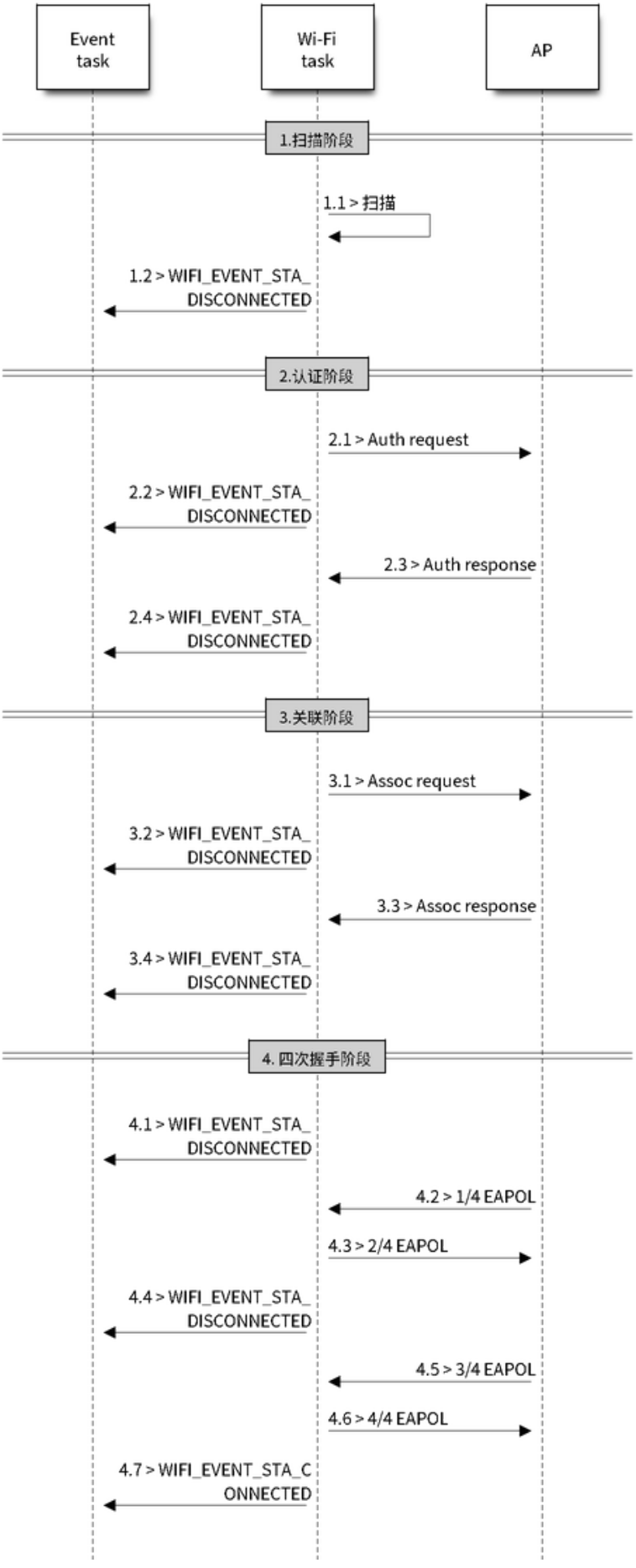

图 56: Wi-Fi station 连接过程

关联阶段

- s3.1：发送关联请求并使能关联计时器。
- s3.2：如果在关联计时器超时之前未接收到关联响应，将产生*WIFI_EVENT_STA_DISCONNECTED* 事件，且原因代码为 WIFI_REASON_ASSOC_EXPIRE。请参阅*Wi-Fi 原因代码*。
- s3.3：接收到关联响应，且关联计时器终止。
- s3.4：AP 在响应中拒绝关联且产生*WIFI_EVENT_STA_DISCONNECTED* 事件，原因代码将在关联响应中指定。请参阅*Wi-Fi 原因代码*。

四次握手阶段

- s4.1：使能握手定时器，定时器终止之前未接收到 1/4 EAPOL，此时将产生*WIFI_EVENT_STA_DISCONNECTED* 事件，且原因代码为 WIFI_REASON_HANDSHAKE_TIMEOUT。请参阅*Wi-Fi 原因代码*。
- s4.2：接收到 1/4 EAPOL。
- s4.3：station 回复 2/4 EAPOL。
- s4.4：如果在握手定时器终止之前未接收到 3/4 EAPOL，将产生*WIFI_EVENT_STA_DISCONNECTED* 事件，且原因代码为 WIFI_REASON_HANDSHAKE_TIMEOUT。请参阅*Wi-Fi 原因代码*。
- s4.5：接收到 3/4 EAPOL。
- s4.6：station 回复 4/4 EAPOL。
- s4.7：station 产生*WIFI_EVENT_STA_CONNECTED* 事件。

Wi-Fi 原因代码

下表罗列了 ESP32 中定义的原因代码。其中，第一列为 esp_wifi_types.h 中定义的宏名称。名称中省去了前缀 *WIFI_REASON*，也就是说，名称 *UNSPECIFIED* 实际应为 *WIFI_REASON_UNSPECIFIED*，以此类推。第二列为原因代码的相应数值。第三列为该原因映射到 IEEE 802.11-2020 中 9.4.1.7 段的标准值。（更多详细信息，请参阅前文描述。）最后一列为这一原因的描述。

原因代码	数值	映射值	描述
UNSPECIFIED	1	1	出现内部错误，例如：内存已满，内部发送失败，或该原因已被远端接收等。
AUTH_EXPIRE	2	2	先前的 authentication 已失效。 对于 ESP station，出现以下情况时将报告该代码： • authentication 超时； • 从 AP 接收到该代码。 对于 ESP AP，出现以下情况时将报告该代码： • 在过去五分钟之内，AP 未从 station 接收到任何数据包； • 由于调用了函数`esp_wifi_stop()` 导致 AP 终止； • 由于调用了函数`esp_wifi_deauth_sta()` 导致 station 的 authentication 取消。
AUTH_LEAVE	3	3	authentication 取消，因为发送 station 正在离开（或已经离开）。 对于 ESP station，出现以下情况时报告该代码： • 从 AP 接收到该代码。

下页继续

表 28 – 续上页

原因代码	数值	映射值	描述
ASSOC_EXPIRE	4	4	因为 AP 不活跃，association 取消。 对于 ESP station，出现以下情况时报告该代码： • 从 AP 接收到该代码。 对于 ESP AP，出现以下情况时将报告该代码： • 在过去五分钟之内，AP 未从 station 接收到任何数据包； • 由于调用了函数 *esp_wifi_stop()* 导致 AP 终止； • 由于调用了函数 *esp_wifi_deauth_sta()* 导致 station 的 authentication 取消。
ASSOC_TOOMANY	5	5	association 取消，因为 AP 无法同时处理所有当前已关联的 STA。 对于 ESP station，出现以下情况时报告该代码： • 从 AP 接收到该代码。 对于 ESP AP，出现以下情况时将报告该代码： • 与 AP 相关联的 station 数量已到达 AP 可支持的最大值。
NOT_AUTHED	6	6	从一个未认证 station 接收到 class-2 frame。 对于 ESP station，出现以下情况时报告该代码： • 从 AP 接收到该代码。 对于 ESP AP，出现以下情况时将报告该代码： • AP 从一个未认证 station 接收到数据包。
NOT_ASSOCED	7	7	从一个未关联 station 接收到的 class-3 frame。 对于 ESP station，出现以下情况时报告该代码： • 从 AP 接收到该代码。 对于 ESP AP，出现以下情况时将报告该代码： • AP 从未关联 station 接收到数据包。
ASSOC_LEAVE	8	8	association 取消，因为发送 station 正在离开（或已经离开）BSS。 对于 ESP station，出现以下情况时报告该代码： • 从 AP 接收到该代码。 • 由于调用 *esp_wifi_disconnect()* 和其它 API，station 断开连接。
ASSOC_NOT_AUTHED	9	9	station 的 re(association) 请求未被响应 station 认证。 对于 ESP station，出现以下情况时报告该代码： • 从 AP 接收到该代码。 对于 ESP AP，出现以下情况时将报告该代码： • AP 从一个已关联，但未认证的 station 接收到数据包。
DISASSOC_PWRCAP_BAD	10	10	association 取消，因为无法接收功率能力 (Power Capability) 元素中的信息。 对于 ESP station，出现以下情况时报告该代码： • 从 AP 接收到该代码。
DISASSOC_SUPCHAN_BAD	11	11	association 取消，因为无法接收支持的信道 (Supported Channels) 元素中的信息。 对于 ESP station，出现以下情况时报告该代码： • 从 AP 接收到该代码。

下页继续

表 28 – 续上页

原因代码	数值	映射值	描述
IE_INVALID	13	13	无效元素，即内容不符合 Wi-Fi 协议中帧格式 (Frame formats) 章节所描述标准的元素。 对于 ESP station，出现以下情况时报告该代码： • 从 AP 接收到该代码。 对于 ESP AP，出现以下情况时将报告该代码： • AP 解析了一个错误的 WPA 或 RSN IE。
MIC_FAILURE	14	14	消息完整性代码 (MIC) 出错。 对于 ESP station，出现以下情况时报告该代码： • 从 AP 接收到该代码。
4WAY_HANDSHAKE_TIMEOUT	15	15	四次握手超时。由于某些历史原因，在 ESP 中该原因代码实为 WIFI_REASON_HANDSHAKE_TIMEOUT。 对于 ESP station，出现以下情况时报告该代码： • 握手超时。 • 从 AP 接收到该代码。
GROUP_KEY_UPDATE_TIMEOUT	16	16	组密钥 (Group-Key) 握手超时。 对于 ESP station，出现以下情况时报告该代码： • 从 AP 接收到该代码。
IE_IN_4WAY_DIFFERS	17	17	四次握手中产生的元素与 (re-)association 后的 request/probe 以及 response/beacon frame 中的信息不同。 对于 ESP station，出现以下情况时报告该代码： • 从 AP 接收到该代码。 • station 发现四次握手的 IE 与 (re-)association 后的 request/probe 以及 response/beacon frame 中的 IE 不同。
GROUP_CIPHER_INVALID	18	18	无效组密文。 对于 ESP station，出现以下情况时报告该代码： • 从 AP 接收到该代码。
PAIRWISE_CIPHER_INVALID	19	19	无效成对密文。 对于 ESP station，出现以下情况时报告该代码： • 从 AP 接收到该代码。
AKMP_INVALID	20	20	无效 AKMP。 对于 ESP station，出现以下情况时报告该代码： • 从 AP 接收到该代码。
UNSUPP_RSN_IE_VERSION	21	21	不支持的 RSNE 版本。 对于 ESP station，出现以下情况时报告该代码： • 从 AP 接收到该代码。
INVALID_RSN_IE_CAP	22	22	无效的 RSNE 性能。 对于 ESP station，出现以下情况时报告该代码： • 从 AP 接收到该代码。
802_1X_AUTH_FAILED	23	23	IEEE 802.1X. authentication 失败。 对于 ESP station，出现以下情况时报告该代码： • 从 AP 接收到该代码。 对于 ESP AP，出现以下情况时将报告该代码： • IEEE 802.1X. authentication 失败。

下页继续

表 28 – 续上页

原因代码	数值	映射值	描述
CIPHER_SUITE_REJECTED	24	24	因安全策略，安全密钥算法套件 (cipher suite) 被拒。 对于 ESP station，出现以下情况时报告该代码： • 从 AP 接收到该代码。
TDLS_PEER_UNREACHABLE	25	25	通过 TDLS 直连无法到达 TDLS 对端 STA，导致 TDLS 直连中断。
TDLS_UNSPECIFIED	26	26	不明原因的 TDLS 直连中断。
SSP_REQUESTED_DISASSOC	27	27	association 取消，由于会话被 SSP request 终止。
NO_SSP_ROAMING_AGREEMENT	28	28	association 取消，由于缺乏 SSP 漫游认证。
BAD_CIPHER_OR_AKM	29	29	请求的服务被拒绝，由于 SSP 密码套件或者 AKM 的需求。
NOT_AUTHORIZED_THIS_LOCATION	30	30	请求的服务在此位置未得到授权。
SERVICE_CHANGE_PRECLUDES_TS	31	31	TS 被删除，原因是：BSS 服务特性或者运行模式改变导致 Qos AP 缺少足够的带宽给 Qos STA 使用（例如：一个 HT BSS 从 40 MHz 的信道切换到 20 MHz 的信道）。
UNSPECIFIED_QOS	32	32	association 取消，由于不明确的 QoS 相关原因。
NOT_ENOUGH_BANDWIDTH	33	33	association 取消，由于 QoS AP 缺少足够的带宽给该 QoS STA 使用。
MISSING_ACKS	34	34	association 取消，原因是：大量的帧需要被确认，但由于 AP 传输或者糟糕的信道条件而没有被确认。
EXCEEDED_TXOP	35	35	association 取消，由于 STA 的传输超过了 TXOPs 的限制。
STA_LEAVING	36	36	请求 STA 离开了 BSS 或者重置了。
END_BA	37	37	请求 STA 不再使用该流或者会话。
UNKNOWN_BA	38	38	请求 STA 使用一种尚未完成的机制接收帧。
TIMEOUT	39	39	对端 STA 的请求超时。
Reserved	40 ~ 45	40 ~ 45	保留
PEER_INITIATED	46	46	在 Disassociation 帧中：已达到授权访问限制。
AP_INITIATED	47	47	在 Disassociation 帧中：外部服务需求。
INVALID_FT_ACTION_FRAME_COUNT	48	48	无效的 FT Action 帧计数。
INVALID_PMKID	49	49	无效的成对主密钥标识符（PMKID）。
INVALID_MDE	50	50	无效的 MDE。
INVALID_FTE	51	51	无效的 FTE。
TRANSMISSION_LINK_ESTABLISHMENT_FAILED	67	67	在备用信道中建立传输链路失败。
ALTERATIVE_CHANNEL_OCCUPIED	68	68	备用信道被占用。
BEACON_TIMEOUT	200	保留	乐鑫特有的 Wi-Fi 原因代码：当 station 连续失去 N 个 beacon，将中断连接并报告该代码。
NO_AP_FOUND	201	保留	乐鑫特有的 Wi-Fi 原因代码：当 station 未扫描到目标 AP 时，将报告该代码。
AUTH_FAIL	202	保留	乐鑫特有的 Wi-Fi 原因代码：authentication 失败，但并非由超时而引发。
ASSOC_FAIL	203	保留	乐鑫特有的 Wi-Fi 原因代码：association 失败，但并非由 ASSOC_EXPIRE 或 ASSOC_TOOMANY 引发。
HANDSHAKE_TIMEOUT	204	保留	乐鑫特有的 Wi-Fi 原因代码：握手失败，与 WIFI_REASON_4WAY_HANDSHAKE_TIMEOUT 中失败原因相同。
CONNECTION_FAIL	205	保留	乐鑫特有的 Wi-Fi 原因代码：AP 连接失败。

与密码错误有关的 Wi-Fi 原因代码

下表罗列了与密码错误相关的 Wi-Fi 原因代码。

原因代码	数值	描述
4WAY_HANDSHAKE_TIMEOUT	15	四次握手超时。STA 在连接加密的 AP 的时候输入了错误的密码
NO_AP_FOUND	201	密码错误会出现这个原因代码的场景有如下两个： • STA 在连接加密的 AP 的时候没有输入密码 • STA 在连接非加密的 AP 的时候输入了密码
HANDSHAKE_TIMEOUT	204	握手超时。

与低 RSSI 有关的 Wi-Fi 原因代码

下表罗列了与低 RSSI 相关的 Wi-Fi 原因代码。

原因代码	数值	描述
NO_AP_FOUND	201	低 RSSI 导致 station 无法扫描到目标 AP
HANDSHAKE_TIMEOUT	204	握手超时。

4.35.11 找到多个 AP 时的 ESP32 Wi-Fi station 连接

该场景与*ESP32 Wi-Fi station 连接场景*相似，不同之处在于该场景中不会产生*WIFI_EVENT_STA_DISCONNECTED*事件，除非 station 无法连接所有找到的 AP。

4.35.12 Wi-Fi 重新连接

出于多种原因，station 可能会断开连接，例如：连接的 AP 重新启动等。应用程序应负责重新连接。推荐使用的方法为：在接收到*WIFI_EVENT_STA_DISCONNECTED*事件后调用函数`esp_wifi_connect()`。

但有时，应用程序需要更复杂的方式进行重新连接：

- 如果断开连接事件是由调用函数`esp_wifi_disconnect()`引发的，那么应用程序可能不希望进行重新连接。
- 如果 station 随时可能调用函数`esp_wifi_scan_start()`开始扫描，此时就需要一个更佳的重新连接方法，请参阅*连接 Wi-Fi 时扫描*。

另一点需要注意的是，如果存在多个具有相同 SSID 的 AP，那么重新连接后可能不会连接到之前的同一个 AP。重新连接时，station 将永远选择最佳的 AP 进行连接。

4.35.13 Wi-Fi beacon 超时

ESP32 使用 beacon 超时机制检测 AP 是否活跃。如果 station 在 inactive 时间内未收到所连接 AP 的 beacon，将发生 beacon 超时。inactive 时间通过调用函数`esp_wifi_set_inactive_time()`设置。

beacon 超时发生后，station 将向 AP 发送 5 个 probe request，如果仍未从 AP 接收到 probe response 或 beacon，station 将与 AP 断开连接并产生*WIFI_EVENT_STA_DISCONNECTED*事件。

需要注意的是，扫描过程中会重置 beacon 超时所使用的定时器，即扫描过程会影响*WIFI_EVENT_STA_BEACON_TIMEOUT*事件的触发。

4.35.14 ESP32 Wi-Fi 配置

使能 Wi-Fi NVS 时，所有配置都将存储到 flash 中；反之，请参阅*Wi-Fi NVS Flash*。

Wi-Fi 模式

调用函数*esp_wifi_set_mode()* 设置 Wi-Fi 模式。

模式	描述
WIFI_MODE_NULL	NULL 模式：此模式下，内部数据结构不分配给 station 和 AP，同时，station 和 AP 接口不会为发送/接收 Wi-Fi 数据进行初始化。通常，此模式用于 Sniffer，或者您不想通过调用函数 *esp_wifi_deinit()* 卸载整个 Wi-Fi 驱动程序来同时停止 station 和 AP。
WIFI_MODE_STA	station 模式：此模式下，*esp_wifi_start()* 将初始化内部 station 数据，同时 station 接口准备发送/接收 Wi-Fi 数据。调用函数*esp_wifi_connect()* 后，station 将连接到目标 AP。
WIFI_MODE_AP	AP 模式：在此模式下，*esp_wifi_start()* 将初始化内部 AP 数据，同时 AP 接口准备发送/接收 Wi-Fi 数据。随后，Wi-Fi 驱动程序开始广播 beacon，AP 即可与其它 station 连接。
WIFI_MODE_APSTA	station/AP 共存模式：在此模式下，函数 *esp_wifi_start()* 将同时初始化 station 和 AP。该步骤在 station 模式和 AP 模式下完成。请注意 ESP station 所连外部 AP 的信道优先于 ESP AP 信道。

Station 基本配置

API *esp_wifi_set_config()* 可用于配置 station。配置的参数信息会保存到 NVS 中。下表详细介绍了各个字段。

字段	描述
ssid	station 想要连接的目标 AP 的 SSID。
password	目标 AP 的密码。
scan_method	WIFI_FAST_SCAN 模式下，扫描到一个匹配的 AP 时即结束。WIFI_ALL_CHANNEL_SCAN 模式下，在所有信道扫描所有匹配的 AP。默认扫描模式是 WIFI_FAST_SCAN。
bssid_set	如果 bssid_set 为 0，station 连接 SSID 与 “ssid” 字段相同的 AP，同时忽略字段 “bssid”。其他情况下，station 连接 SSID 与 “ssid” 字段相同、BSSID 与 “bssid” 字段也相同的 AP。
bssid	只有当 bssid_set 为 1 时有效。见字段 “bssid_set”。
channel	该字段为 0 时，station 扫描信道 1 ~ N 寻找目标 AP；否则，station 首先扫描值与 “channel” 字段相同的信道，再扫描其他信道。比如，当该字段设置为 3 时，扫描顺序为 3，1，2，⋯，N 。如果您不知道目标 AP 在哪个信道，请将该字段设置为 0。
sort_method	该字段仅用于 WIFI_ALL_CHANNEL_SCAN 模式。 如果设置为 WIFI_CONNECT_AP_BY_SIGNAL，所有匹配的 AP 将会按照信号强度排序，信号最好的 AP 会被首先连接。比如，如果 station 想要连接 ssid 为 “apxx” 的 AP，且扫描到两个这样的 AP。第一个 AP 的信号为 -90 dBm，第二个 AP 的信号为 -30 dBm，station 首先连接第二个 AP。除非失败，才会连接第一个。 如果设置为 WIFI_CONNECT_AP_BY_SECURITY，所有匹配的 AP 将会按照安全性排序。比如，如果 station 想要连接 ssid 为 “apxx” 的 AP，并且扫描到两个这样的 AP。第一个 AP 为开放式，第二个 AP 为 WPA2 加密，station 首先连接第二个 AP。除非失败，才会连接第一个。
threshold	该字段用来筛选找到的 AP，如果 AP 的 RSSI 或安全模式小于配置的阈值，则不会被连接。 如果 RSSI 设置为 0，则表示默认阈值、默认 RSSI 阈值为 -127 dBm。如果 authmode 阈值设置为 0，则表示默认阈值，默认 authmode 阈值无授权。

注意： WEP/WPA 安全模式在 IEEE802.11-2016 协议中已弃用，建议不要使用。可使用 authmode 阈值代替，通过将 threshold.authmode 设置为 WIFI_AUTH_WPA2_PSK 使用 WPA2 模式

AP 基本配置

API *esp_wifi_set_config()* 可用于配置 AP。配置的参数信息会保存到 NVS 中。下表详细介绍了各个字段。

字段	描述
ssid	指 AP 的 SSID。如果 ssid[0] 和 ssid[1] 均为 0xFF，AP 默认 SSID 为 ESP_aabbcc，”aabbcc” 是 AP MAC 的最后三个字节。
password	AP 的密码。如果身份验证模式为 WIFI_AUTH_OPEN，此字段将被忽略。
ssid_len	SSID 的长度。如果 ssid_len 为 0，则检查 SSID 直至出现终止字符。如果 ssid_len 大于 32，请更改为 32，或者根据 ssid_len 设置 SSID 长度。
channel	AP 的信道。如果信道超出范围，Wi-Fi 驱动程序将默认该信道为信道 1。所以，请确保信道在要求的范围内。有关详细信息，请参阅 *Wi-Fi 国家/地区代码*。
authmode	ESP AP 的身份验证模式。目前，ESP Wi-Fi 不支持 AUTH_WEP。如果 authmode 是一个无效值，AP 默认该值为 WIFI_AUTH_OPEN。
ssid_hidden	如果 ssid_hidden 为 1，AP 不广播 SSID。若为其他值，则广播。
max_connection	目前，ESP Wi-Fi 支持 10 个 Wi-Fi 连接。如果 max_connection 大于 10，AP 默认该值为 10。
beacon_interval	beacon 间隔。值为 100 ~ 60000 ms，默认值为 100 ms。如果该值不在上述范围，AP 默认取 100 ms。

Wi-Fi 协议模式

目前，IDF 支持以下协议模式：

协议模式	描述
802.11b	调用函数 esp_wifi_set_protocol(ifx, WIFI_PROTOCOL_11B)，将 station/AP 设置为仅 802.11b 模式。
802.11bg	调用函数 esp_wifi_set_protocol(ifx, WIFI_PROTOCOL_11B|WIFI_PROTOCOL_11G)，将 station/AP 设置为 802.11bg 模式。
802.11g	调用函数 esp_wifi_set_protocol(ifx, WIFI_PROTOCOL_11B|WIFI_PROTOCOL_11G) 和 esp_wifi_config_11b_rate(ifx, true)，将 station/AP 设置为 802.11g 模式。
802.11bgn	调用函数 esp_wifi_set_protocol(ifx, WIFI_PROTOCOL_11B|WIFI_PROTOCOL_11G|WIFI_PROTOCO 将 station/AP 设置为 802.11bgn 模式。
802.11gn	调用函数 esp_wifi_set_protocol(ifx, WIFI_PROTOCOL_11B|WIFI_PROTOCOL_11G|WIFI_PROTOCO 和 esp_wifi_config_11b_rate(ifx, true)，将 station/AP 设置为 802.11gn 模式。
802.11 BGNLR	调用函数 esp_wifi_set_protocol(ifx, WIFI_PROTOCOL_11B|WIFI_PROTOCOL_11G|WIFI_PROTOCO 将 station/AP 设置为 802.11bgn 和 LR 模式。
802.11 LR	调用函数 esp_wifi_set_protocol(ifx, WIFI_PROTOCOL_LR)，将 station/AP 设置为 LR 模式。 **此模式是乐鑫的专利模式，可以达到 1 公里视线范围。请确保 station 和 AP 同时连接至 ESP 设备。**

长距离 (LR)

长距离 (LR) 模式是乐鑫的一项专利 Wi-Fi 模式，可达到 1 公里视线范围。与传统 802.11b 模式相比，接收灵敏度更高，抗干扰能力更强，传输距离更长。

LR 兼容性 由于 LR 是乐鑫的独有 Wi-Fi 模式，只有 ESP32 设备才能传输和接收 LR 数据。也就是说，如果连接的设备不支持 LR，ESP32 设备则不会以 LR 数据速率传输数据。可通过配置适当的 Wi-Fi 模式使您的应用程序实现这一功能。如果协商的模式支持 LR，ESP32 可能会以 LR 速率传输数据，否则，ESP32 将以传统 Wi-Fi 数据速率传输所有数据。

下表是 Wi-Fi 模式协商：

APSTA	BGN	BG	B	BGNLR	BGLR	BLR	LR
BGN	BGN	BG	B	BGN	BG	B	•
BG	BG	BG	B	BG	BG	B	•
B	B	B	B	B	B	B	•
BGNLR	•	•	•	BGNLR	BGLR	BLR	LR
BGLR	•	•	•	BGLR	BGLR	BLR	LR
BLR	•	•	•	BLR	BLR	BLR	LR
LR	•	•	•	LR	LR	LR	LR

上表中，行是 AP 的 Wi-Fi 模式，列是 station 的 Wi-Fi 模式。”-”表示 AP 和 station 的 Wi-Fi 模式不兼容。

根据上表，得出以下结论：

- 对于已使能 LR 的 ESP32 AP，由于不是以 LR 模式发送 beacon，因此与传统的 802.11 模式不兼容。
- 对于已使能 LR 且并非仅 LR 模式的 ESP32 station，与传统 802.11 模式兼容。
- 如果 station 和 AP 都是 ESP32 设备，并且两者都使能 LR 模式，则协商的模式支持 LR。

如果协商的 Wi-Fi 模式同时支持传统的 802.11 模式和 LR 模式，则 Wi-Fi 驱动程序会在不同的 Wi-Fi 模式下自动选择最佳数据速率，应用程序无需任何操作。

LR 对传统 Wi-Fi 设备的影响 以 LR 速率进行的数据传输不会影响传统 Wi-Fi 设备，因为：

- LR 模式下的 CCA 和回退过程符合 802.11 协议。
- 传统的 Wi-Fi 设备可以通过 CCA 检测 LR 信号并进行回退。

也就是说，LR 模式下传输效果与 802.11b 模式相似。

LR 传输距离 LR 的接收灵敏度比传统的 802.11B 模式高 4 dB，理论上，传输距离约为 802.11B 的 2 至 2.5 倍。

LR 吞吐量 因为原始 PHY 数据传输速率为 1/2 Mbps 和 1/4 Mbps，LR 的吞吐量有限。

何时使用 LR 通常使用 LR 的场景包括：

- AP 和 station 都是乐鑫设备。
- 需要长距离 Wi-Fi 连接和数据传输。
- 数据吞吐量要求非常小，例如远程设备控制等。

Wi-Fi 国家/地区代码

调用*esp_wifi_set_country()*，设置国家/地区信息。下表详细介绍了各个字段，请在配置这些字段之前参考当地的 2.4GHz RF 操作规定。

字段	描述
cc[3]	国家/地区代码字符串，此属性标识 station/AP 位于的国家/地区或非国家/地区实体。如果是一个国家/地区，该字符串的前两个八位字节是 ISO/IEC3166-1 中规定的国家/地区两位字母代码。第三个八位字节应是下述之一： • ASCII 码空格字符，代表 station/AP 所处国家/地区的规定允许当前频段所需的所有环境。 • ASCII 码‘O’字符，代表 station/AP 所处国家/地区的规定仅允许室外环境。 • ASCII 码‘I’字符，代表 station/AP 所处国家/地区的规定仅允许室内环境。 • ASCII 码‘X’字符，代表 station/AP 位于非国家/地区实体。非国家实体的前两个八位字节是两个 ASCII 码‘XX’字符。 • 当前使用的操作类表编号的二进制形式。见 IEEE Std 802.11-2020 附件 E。
schan	起始信道，station/AP 所处国家/地区规定的最小信道值。
nchan	规定的总信道数，比如，如果 schan=1，nchan=13，那么 station/AP 可以从信道 1 至 13 发送数据。
policy	国家/地区策略，当配置的国家/地区信息与所连 AP 的国家/地区信息冲突时，该字段决定使用哪一信息。更多策略相关信息，可参见下文。

默认国家/地区信息为:

```
wifi_country_t config = {
    .cc = "CN",
    .schan = 1,
    .nchan = 13,
    .policy = WIFI_COUNTRY_POLICY_AUTO,
};
```

如果 Wi-Fi 模式为 station/AP 共存模式，则它们配置的国家/地区信息相同。有时，station 所连 AP 的国家/地区信息与配置的不同。例如，配置的 station 国家/地区信息为:

```
wifi_country_t config = {
    .cc = "JP",
    .schan = 1,
    .nchan = 14,
    .policy = WIFI_COUNTRY_POLICY_AUTO,
};
```

但所连 AP 的国家/地区信息为:

```
wifi_country_t config = {
    .cc = "CN",
    .schan = 1,
    .nchan = 13,
};
```

此时，使用所连 AP 的国家/地区信息。

下表描述了在不同 Wi-Fi 模式和不同国家/地区策略下使用的国家/地区信息，并描述了对主动扫描的影响。

Wi-Fi 模式	策略	描述
station 模式	WIFI_COUNTRY_POLICY_AUTO	如果所连 AP 的 beacon 中有国家/地区的 IE，使用的国家/地区信息为 beacon 中的信息，否则，使用默认信息。 扫描时： 主动扫描信道 1 至信道 11，被动扫描信道 12 至信道 14。 请记住，如果带有隐藏 SSID 的 AP 和 station 被设置在被动扫描信道上，被动扫描将无法找到该 AP。也就是说，如果应用程序希望在每个信道中找到带有隐藏 SSID 的 AP，国家/地区信息应该配置为 WIFI_COUNTRY_POLICY_MANUAL。
station 模式	WIFI_COUNTRY_POLICY_MANUAL	总是使用配置的国家/地区信息。 扫描时： 主动扫描信道 schan 至信道 schan+nchan-1。
AP 模式	WIFI_COUNTRY_POLICY_AUTO	总是使用配置的国家/地区信息。
AP 模式	WIFI_COUNTRY_POLICY_MANUAL	总是使用配置的国家/地区信息。
station/AP 共存模式	WIFI_COUNTRY_POLICY_AUTO	station 与 station 模式、WIFI_COUNTRY_POLICY_AUTO 策略下使用的国家/地区信息相同。如果 station 不连接任何外部 AP，AP 使用配置的国家/地区信息。如果 station 连接一个外部 AP，该 AP 的国家/地区信息与该 station 相同。
station/AP 共存模式	WIFI_COUNTRY_POLICY_MANUAL	station 与 station 模式、WIFI_COUNTRY_POLICY_MANUAL 策略下使用的国家/地区信息相同。该 AP 与 AP 模式、WIFI_COUNTRY_POLICY_MANUAL 策略下使用的国家/地区信息相同。

主信道 AP 模式下，AP 的信道定义为主信道。Station 模式下，station 所连 AP 的信道定义为主信道。Station/AP 共存模式下，AP 和 station 的主信道必须相同。如果不同，station 的主信道始终优先。比如，初始时，AP 位于信道 6，但 station 连接信道 9 的 AP。因为 station 的主信道具有优先性，该 AP 需要将信道从 6 切换至 9，确保与 station 主信道相同。切换信道时，SoftAP 模式下的 ESP32 将使用信道切换公告 (CSA) 通知连接的 station。支持信道切换的 station 将直接通过，无需与 SoftAP 断连再重新连接。

Wi-Fi 供应商 IE 配置

默认情况下，所有 Wi-Fi 管理帧都由 Wi-Fi 驱动程序处理，应用程序不需要任何操作。但是，某些应用程序可能需要处理 beacon、probe request、probe response 和其他管理帧。例如，如果在管理帧中插入一些只针对供应商的 IE，则只有包含此 IE 的管理帧才能得到处理。ESP32 中，`esp_wifi_set_vendor_ie()` 和`esp_wifi_set_vendor_ie_cb()` 负责此类任务。

4.35.15 Wi-Fi Easy Connect™ (DPP)

Wi-Fi Easy Connect™ （也称为设备配置协议）是一个安全且标准化的配置协议，用于配置 Wi-Fi 设备。更多信息请参考*esp_dpp*。

WPA2-Enterprise

WPA2-Enterprise 是企业无线网络的安全认证机制。在连接到接入点 (AP) 之前，它使用 RADIUS 服务器对网络用户进行身份验证。身份验证过程基于 802.1X 标准，并有不同的扩展身份验证协议 (EAP) 方法，如 TLS、TTLS、PEAP 等。RADIUS 服务器根据用户的凭据（用户名和密码）、数字证书或两者对用户进行身份验证。当处于 station 模式的 ESP32 尝试连接到企业模式的 AP 时，它会向 AP 发送身份验证请求，AP

会将该请求发送到 RADIUS 服务器以对 station 进行身份验证。根据不同的 EAP 方式，可以通过 `idf.py menuconfig` 打开配置，并在配置中设置参数。ESP32 仅在 station 模式下支持 WPA2_Enterprise。

为了建立安全连接，AP 和 station 协商并就要使用的最佳密码套件达成一致。ESP32 支持 AKM 的 802.1X/EAP (WPA) 方法和 AES-CCM（高级加密标准-带密码块链消息验证码协议的计数器模式）支持的密码套件。如果设置了 *USE_MBEDTLS_CRYPTO* 标志，ESP32 也支持 mbedtls 支持的密码套件。

目前，ESP32 支持以下 EAP 方法：

- EAP-TLS: 这是基于证书的方法，只需要 SSID 和 EAP-IDF。
- PEAP: - PEAP： 这是受保护的 EAP 方法。用户名和密码是必填项。
- **EAP-TTLS: 这是基于凭据的方法。只有服务器身份验证是强制性的，而用户身份验证是可选的。用户名和密**
  - PAP: 密码认证协议
  - CHAP: 询问握手身份验证协议
  - MSCHAP 和 MSCHAP-V2
- EAP-FAST: 这是一种基于受保护的访问凭据 (PAC) 的认证方法，使用身份验证和密码。目前使用此功能时需要禁用 USE_MBEDTLS_CRYPTO 标志。

请查看 wifi/wpa2_enterprise 获取关于证书创建以及如何在 ESP32 上运行 wpa2_enterprise 示例的详细信息。

4.35.16 无线网络管理

无线网络管理让客户端设备能够交换有关网络拓扑结构的信息，包括与射频环境相关的信息。这使每个客户端都能感知网络状况，从而促进无线网络性能的整体改进。这是 802.11v 规范的一部分。它还使客户端能够支持网络辅助漫游。

网络辅助漫游让 WLAN 能够向关联的客户端发送消息，从而使客户端与具有更好链路指标的 AP 关联。这对于促进负载平衡以及引导连接不良的客户端都很有用。

目前 802.11v 的实现支持 BSS 过渡管理帧。

4.35.17 无线资源管理

无线电资源测量（802.11k）旨在改善网络内流量的分配方式。在无线局域网中，一般情况下，无线设备会连接发射信号最强的 AP。根据用户的数量和地理位置，这种分配方式有时会导致某个 AP 超负荷而其它 AP 利用不足，从而导致整体网络性能下降。在符合 802.11k 规范的网络中，如果信号最强的 AP 已满负荷加载，无线设备则转移到其它未充分利用的 AP。尽管信号可能较弱，但由于更有效地利用了网络资源，总体吞吐量会更大。

目前 802.11k 的实现支持信标测量报告、链路测量报告和邻居请求。

请参考 IDF 示例程序 examples/wifi/roaming/README.md 来设置和使用这些 API。示例代码只演示了如何使用这些 API，应用程序应根据需要定义自己的算法和案例。

4.35.18 ESP32 Wi-Fi 节能模式

Station 睡眠

目前，ESP32 Wi-Fi 支持 Modem-sleep 模式，该模式是 IEEE 802.11 协议中的传统节能模式。仅 Station 模式支持该模式，station 必须先连接到 AP。如果使能了 Modem-sleep 模式，station 将定期在活动状态和睡眠状态之间切换。在睡眠状态下，RF、PHY 和 BB 处于关闭状态，以减少功耗。Modem-sleep 模式下，station 可以与 AP 保持连接。

Modem-sleep 模式包括最小和最大节能模式。在最小节能模式下，每个 DTIM 间隔，station 都将唤醒以接收 beacon。广播数据在 DTIM 之后传输，因此不会丢失。但是，由于 DTIM 间隔长短由 AP 决定，如果该间隔时间设置较短，则省电效果不大。

在最大节能模式下，每个监听间隔，station 都将唤醒以接收 beacon。可以设置该监听间隔长于 AP 的 DTIM 周期。在 DTIM 期间内，station 可能处于睡眠状态，广播数据会丢失。如果监听间隔较长，则可以

节省更多电量，但广播数据更容易丢失。连接 AP 前，可以通过调用 API *esp_wifi_set_config()* 配置监听间隔。

调用*esp_wifi_init()* 后，调用 esp_wifi_set_ps(WIFI_PS_MIN_MODEM) 可使能 Modem-sleep 最小节能模式。调用 esp_wifi_set_ps(WIFI_PS_MAX_MODEM) 可使能 Modem-sleep 最大节能模式。station 连接到 AP 时，Modem-sleep 模式将启动。station 与 AP 断开连接时，Modem-sleep 模式将停止。

调用 esp_wifi_set_ps(WIFI_PS_NONE) 可以完全禁用 Modem-sleep 模式。禁用会增大功耗，但可以最大限度减少实时接收 Wi-Fi 数据的延迟。使能 Modem-sleep 时，接收 Wi-Fi 数据的延迟时间可能与 DTIM 周期（最小节能模式）或监听间隔（最大节能模式）相同。在 Wi-Fi 与 Bluetooth LE 共存模式下，无法完全禁用 modem-sleep 模式。

默认的 Modem-sleep 模式是 WIFI_PS_MIN_MODEM。

AP 睡眠

目前，ESP32 AP 不支持 Wi-Fi 协议中定义的所有节能功能。具体来说，AP 只缓存所连 station 单播数据，不缓存组播数据。如果 ESP32 AP 所连的 station 已使能节能功能，可能发生组播数据包丢失。

未来，ESP32 AP 将支持所有节能功能。

4.35.19 ESP32 Wi-Fi 吞吐量

下表是我们在 Espressif 实验室和屏蔽箱中获得的最佳吞吐量结果。

类型/吞吐量	实验室空气状况	屏蔽箱	测试工具	IDF 版本 (commit ID)
原始 802.11 数据包接收数据	N/A	**130 MBit/s**	内部工具	N/A
原始 802.11 数据包发送数据	N/A	**130 MBit/s**	内部工具	N/A
UDP 接收数据	30 MBit/s	85 MBit/s	iperf example	15575346
UDP 发送数据	30 MBit/s	75 MBit/s	iperf example	15575346
TCP 接收数据	20 MBit/s	65 MBit/s	iperf example	15575346
TCP 发送数据	20 MBit/s	75 MBit/s	iperf example	15575346

使用 iperf example 测试吞吐量时，sdkconfig 是:idf_file:‘ 示例/wifi/iperf/sdkconfig.defaults.esp32s2‘。

4.35.20 Wi-Fi 80211 数据包发送

esp_wifi_80211_tx() API 可用于：

- 发送 beacon、probe request、probe response 和 action 帧。
- 发送非 QoS 数据帧。

不能用于发送加密或 QoS 帧。

使用 esp_wifi_80211_tx() 的前提条件

- Wi-Fi 模式为 station 模式，AP 模式，或 station/AP 共存模式。

- API esp_wifi_set_promiscuous(true) 或*esp_wifi_start()*，或者二者都返回 ESP_OK。这是为确保在调用函数*esp_wifi_80211_tx()* 前，Wi-Fi 硬件已经初始化。对于 ESP32，esp_wifi_set_promiscuous(true) 和*esp_wifi_start()* 都可以触发 Wi-Fi 硬件初始化。
- 提供正确的*esp_wifi_80211_tx()* 参数。

传输速率

- 默认传输速率为 1 Mbps。
- 可以通过函数*esp_wifi_config_80211_tx_rate()* 设置任意速率。
- 可以通过函数*esp_wifi_set_bandwidth()* 设置任意带宽。

在不同情况下需要避免的副作用

理论上，如果不考虑 API 对 Wi-Fi 驱动程序或其他 station 或 AP 的副作用，可以通过空中发送一个原始的 802.11 数据包，包括任何目的地址的 MAC、任何源地址的 MAC、任何 BSSID、或任何其他类型的数据包。但是，一个具有强健、有用的应用程序应该避免这种副作用。下表针对如何避免*esp_wifi_80211_tx()* 的副作用提供了一些提示或建议。

场景	描述
无 Wi-Fi 连接	在这种情况下，因为没有 Wi-Fi 连接，Wi-Fi 驱动程序不会受到副作用影响。如果 en_sys_seq==true，则 Wi-Fi 驱动程序负责序列控制。如果 en_sys_seq==false，应用程序需要确保缓冲区的序列正确。 理论上，MAC 地址可以是任何地址。但是，这样可能会影响其他使用相同 MAC/BSSID 的 station/AP。 例如，AP 模式下，应用程序调用函数 esp_wifi_80211_tx() 发送带有 BSSID == mac_x 的 beacon，但是 mac_x 并非 AP 接口的 MAC。而且，还有另一个 AP（我们称之为“other-AP”）的 bssid 是 mac_x。因此，连接到“other-AP”的 station 无法分辨 beacon 来自“other-AP”还是 esp_wifi_80211_tx()，就会出现“意外行为”。 为了避免上述副作用，我们建议： • 如果在 station 模式下调用函数 esp_wifi_80211_tx()，第一个 MAC 应该是组播 MAC 或是目标设备的 MAC，第二个 MAC 应该是 station 接口的 MAC。 • 如果在 AP 模式下调用函数 esp_wifi_80211_tx，第一个 MAC 应该是组播 MAC 或是目标设备的 MAC，第二个 MAC 应该是 AP 接口的 MAC。 上述建议仅供避免副作用，在有充分理由的情况下可以忽略。
有 Wi-Fi 连接	当 Wi-Fi 已连接，且序列由应用程序控制，应用程序可能会影响整个 Wi-Fi 连接的序列控制。因此，en_sys_seq 要为 true，否则将返回 ESP_ERR_WIFI_ARG。 “无 Wi-Fi 连接”情况下的 MAC 地址建议也适用于此情况。 如果 Wi-Fi 模式是 station 模式，MAC 的地址 1 是 station 所连 AP 的 MAC，地址 2 是 station 接口的 MAC，那么就称数据包是从 station 发送到 AP。另一方面，如果 Wi-Fi 模式是 AP 模式，且 MAC 地址 1 是该 AP 所连 station 的 MAC，地址 2 是 AP 接口的 MAC，那么就称数据包是从 AP 发送到 station。为避免与 Wi-Fi 连接冲突，可采用以下检查方法： • 如果数据包类型是数据，且是从 station 发送到 AP，IEEE 802.11 Frame control 字段中的 ToDS 位应该为 1，FromDS 位为 0，否则，Wi-Fi 驱动程序不接受该数据包。 • 如果数据包类型是数据，且是从 AP 发送到 station，IEEE 802.11 Frame control 字段中的 ToDS 位应该为 0，FromDS 位为 1，否则，Wi-Fi 驱动程序不接受该数据包。 • 如果数据包是从 station 发送到 AP，或从 AP 到 station，Power Management、More Data 和 Re-Transmission 位应该为 0，否则，Wi-Fi 驱动程序不接受该数据包。 如果任何检查失败，将返回 ESP_ERR_WIFI_ARG。

4.35.21 Wi-Fi Sniffer 模式

Wi-Fi Sniffer 模式可以通过*esp_wifi_set_promiscuous()* 使能。如果使能 Sniffer 模式，**可以**向应用程序转储以下数据包。

- 802.11 管理帧
- 802.11 数据帧，包括 MPDU、AMPDU、AMSDU 等
- 802.11 MIMO 帧，Sniffer 模式仅转储 MIMO 帧的长度。
- 802.11 控制帧

不可以向应用程序转储以下数据包。

- 802.11 错误帧，如有 CRC 错误的帧等。

对于 Sniffer 模式 **可以**转储的帧，应用程序可以另外使用*esp_wifi_set_promiscuous_filter()* 和*esp_wifi_set_promiscuous_ctrl_filter()* 决定筛选哪些特定类型的数据包。应用程序默认筛选所有 802.11 数据和管理帧。

可以在 WIFI_MODE_NULL、WIFI_MODE_STA、WIFI_MODE_AP、WIFI_MODE_APSTA 等 Wi-Fi 模式下使能 Wi-Fi Sniffer 模式。也就是说，当 station 连接到 AP，或者 AP 有 Wi-Fi 连接时，就可以使能。请注意，Sniffer 模式对 station/AP Wi-Fi 连接的吞吐量有 **很大影响**。通常，除非有特别原因，当 station/AP Wi-Fi 连接出现大量流量，不应使能。

该模式下还应注意回调函数 wifi_promiscuous_cb_t 的使用。该回调将直接在 Wi-Fi 驱动程序任务中进行，所以如果应用程序需处理大量过滤的数据包，建议在回调中向应用程序任务发布一个事件，把真正的工作推迟到应用程序任务中完成。

4.35.22 Wi-Fi 多根天线

下图描述 Wi-Fi 多根天线的选择过程:

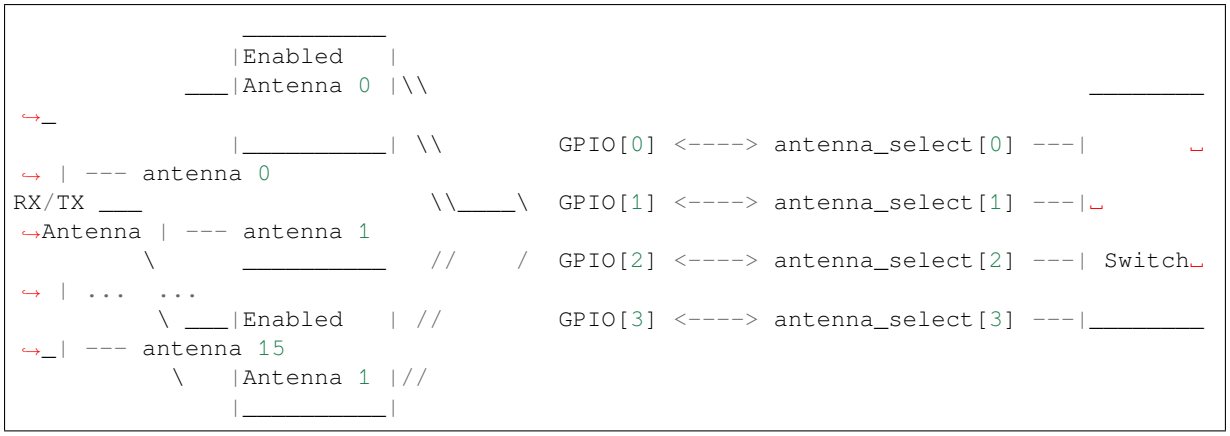

ESP32 通过外部天线开关，最多支持 16 根天线。天线开关最多可由四个地址管脚控制 - antenna_select[0:3]。向 antenna_select[0:3] 输入不同的值，以选择不同的天线。例如，输入值‘0b1011’表示选中天线 11 。antenna_select[3:0] 的默认值为“0b0000”，表示默认选择了天线 0。

四个高电平有效 antenna_select 管脚有多达四个 GPIO 连接。ESP32 可以通过控制 GPIO[0:3] 选择天线。API *esp_wifi_set_ant_gpio()* 用于配置 antenna_selects 连接哪些 GPIO。如果 GPIO[x] 连接到 antenna_select[x]，gpio_config->gpio_cfg[x].gpio_select 应设置为 1，且要提供 gpio_config->gpio_cfg[x].gpio_num 的值。

天线开关的具体实现不同，*antenna_select[0:3]* 的输入值中可能存在非法值，即 ESP32 通过外部天线开关支持的天线数可能小于 16 根。例如，ESP32-WROOM-DA 使用 RTC6603SP 作为天线开关，仅支持 2 根天线。两个天线选择输入管脚为高电平有效，连接到两个 GPIO。’0b01’表示选中天线 0，’0b10’表示选中天线 1。输入值‘0b00’和‘0b11’为非法值。

尽管最多支持 16 根天线，发送和接收数据时，最多仅能同时使能两根天线。API *esp_wifi_set_ant()* 用于配置使能哪些天线。

使能天线后，选择算法的过程同样可由*esp_wifi_set_ant()* 配置。接收/发送数据源的天线模式可以是 WIFI_ANT_MODE_ANT0、WIFI_ANT_MODE_ANT1 或 WIFI_ANT_MODE_AUTO。如果天线模式为 WIFI_ANT_MODE_ANT0，使能的天线 0 用于接收/发送数据。如果天线模式为 WIFI_ANT_MODE_ANT1，使能天线 1 用于接收/发送数据。否则，Wi-Fi 会自动选择使能天线中信号较好的天线。

如果接收数据的天线模式为 WIFI_ANT_MODE_AUTO，还需要设置默认天线模式。只有在满足某些条件时，接收数据天线才会切换，例如，如果 RSSI 低于 -65 dBm，或另一根天线信号更好。如果条件不满足，接收数据使用默认天线。如果默认天线模式为 WIFI_ANT_MODE_ANT1，则使能的天线 1 是默认接收数据天线，否则是使能的天线 0。

有一些限制情况需要考虑：

- 因为发送数据天线基于 WIFI_ANT_MODE_AUTO 类型的接收数据天线选择算法，只有接收数据的天线模式为 WIFI_ANT_MODE_AUTO 时，发送数据天线才能设置为 WIFI_ANT_MODE_AUTO。
- 目前，Bluetooth® 不支持多根天线功能，请不要使用与多根天线有关的 API。

推荐在以下场景中使用多根天线：

- Wi-Fi 模式 WIFI_MODE_STA 下，接收/发送数据的天线模式均配置为 WIFI_ANT_MODE_AUTO。Wi-Fi 驱动程序自动选择更好的接收/发送数据天线。
- 接收数据天线模式配置为 WIFI_ANT_MODE_AUTO。发送数据的天线模式配置为 WIFI_ANT_MODE_ANT0 或 WIFI_ANT_MODE_ANT1。应用程序可以始终选择指定的天线用于发送数据，也可以执行自身发送数据天线选择算法，如根据信道切换信息选择发送数据的天线模式等。
- 接收/发送数据的天线模式均配置为 WIFI_ANT_MODE_ANT0 或 WIFI_ANT_MODE_ANT1。

Wi-Fi 多根天线配置

通常，可以执行以下步骤来配置多根天线：

- 配置 antenna_selects 连接哪些 GPIOs，例如，如果支持四根天线，且 GPIO20/GPIO21 连接到 antenna_select[0]/antenna_select[1]，配置如下所示：

```
wifi_ant_gpio_config_t config = {
    { .gpio_select = 1, .gpio_num = 20 },
    { .gpio_select = 1, .gpio_num = 21 }
};
```

- 配置使能哪些天线、以及接收/发送数据如何使用使能的天线，例如，如果使能了天线 1 和天线 3，接收数据需要自动选择较好的天线，并将天线 1 作为默认天线，发送数据始终选择天线 3。配置如下所示：

```
wifi_ant_config_t config = {
    .rx_ant_mode = WIFI_ANT_MODE_AUTO,
    .rx_ant_default = WIFI_ANT_ANT0,
    .tx_ant_mode = WIFI_ANT_MODE_ANT1,
    .enabled_ant0 = 1,
    .enabled_ant1 = 3
};
```

4.35.23 Wi-Fi 信道状态信息

信道状态信息 (CSI) 是指 Wi-Fi 连接的信道信息。ESP32 中，CSI 由子载波的信道频率响应组成，CSI 从发送端接收数据包时开始估计。每个子载波信道频率响由两个字节的有符号字符记录，第一个字节是虚部，第二个字节是实部。根据接收数据包的类型，信道频率响应最多有三个字段。分别是 LLTF、HT-LTF 和 STBC-HT-LTF。对于在不同状态的信道上接收到的不同类型的数据包，CSI 的子载波索引和总字节数如下表所示。

信道	辅助信道				下					上				
数据包信息	信号模式	非 HT	HT		非 HT	HT				非 HT	HT			
	信道带宽	20 MHz	20 MHz		20 MHz	20 MHz		40 MHz		20 MHz	20 MHz		40 MHz	
	STBC	非 STBC	非 STBC	STBC	非 STBC	非 STBC	STBC	非 STBC	STBC	非 STBC	非 STBC	STBC	非 STBC	STBC
子载波索引	LLTF	0~31,-32~-1	0~31,-32~-1	0~31,-32~-1	0~63	0~63	0~63	0~63	0~63	-64~-1	-64~-1	-64~-1	-64~-1	-64~-1
	HT-LTF	—	0~31,-32~-1	0~31,-32~-1	—	0~63	0~62	0~63,-64~-1	0~60,-60~-1	—	-64~-1	-62~-1	0~63,-64~-1	0~60,-60~-1
	STBC-HT-LTF	—	—	0~31,-32~-1	—	—	0~62	—	0~60,-60~-1	—	—	-62~-1	—	0~60,-60~-1
总字节数		128	256	384	128	256	380	384	612	128	256	376	384	612

表中的所有信息可以在 wifi_csi_info_t 结构中找到。

- 辅助信道指 rx_ctrl 字段的 secondary_channel 字段。
- 数据包的信号模式指 rx_ctrl 字段的 sig_mode 字段。
- 信道带宽指 rx_ctrl 字段中的 cwb 字段。
- STBC 指 rx_ctrl 字段的 stbc 字段。
- 总字节数指 len 字段。
- 每个长训练字段 (LTF) 类型对应的 CSI 数据存储在从 buf 字段开始的缓冲区中。每个元素以两个字节的形式存储：虚部和实部。每个元素的顺序与表中的子载波相同。LTF 的顺序是 LLTF、HT-LTF 和 STBC-HT-LTF。但是，根据信道和数据包的信息，3 个 LTF 可能都不存在（见上文）。
- 如果 wifi_csi_info_t 的 first_word_invalid 字段为 true，表示由于 ESP32 的硬件限制，CSI 数据的前四个字节无效。
- 更多信息，如 RSSI，射频的噪声底，接收时间和天线 rx_ctrl 领域。

子载波的虚部和实部的使用请参考下表。

PHY 标准	子载波范围	导频子载波	子载波个数 (总数/数据子载波)
802.11a/g	-26 to +26	-21, -7, +7, +21	52 total, 48 usable
802.11n, 20MHz	-28 to +28	-21, -7, +7, +21	56 total, 52 usable
802.11n, 40MHz	-57 to +57	-53, -25, -11, +11, +25, +53	114 total, 108 usable

注解:

- 对于 STBC 数据包，每个空时流都提供了 CSI，不会出现 CSD（循环移位延迟）。由于附加链上的每一次循环移位为 -200 ns，因为子载波 0 中没有信道频率响应，在 HT-LTF 和 STBC-HT-LTF 中只记录第一空时流的 CSD 角度。CSD[10:0] 是 11 位，范围从 -pi 到 pi。
- 如果调用 API `esp_wifi_set_csi_config()` 没有使能 LLTF、HT-LTF 或 STBC-HT-LTF，则 CSI 数据的总字节数会比表中的少。例如，如果没有使能 LLTF 和 HT-LTF，而使能 STBC-HT-LTF，当接收到上述条件、HT、40 MHz 或 STBC 的数据包时，CSI 数据的总字节数为 244（(61+60)*2+2=244，结果对齐为四个字节，最后两个字节无效）。

4.35.24 Wi-Fi 信道状态信息配置

要使用 Wi-Fi CSI，需要执行以下步骤。

- 在菜单配置中选择 Wi-Fi CSI。方法是“菜单配置 - > 组件配置–> Wi-Fi –> Wi-Fi CSI（信道状态信息）”。

- 调用 API *esp_wifi_set_csi_rx_cb()* 设置 CSI 接收回调函数。
- 调用 API *esp_wifi_set_csi_config()* 配置 CSI。
- 调用 API *esp_wifi_set_csi()* 使能 CSI。

CSI 接收回调函数从 Wi-Fi 任务中运行。因此，不要在回调函数中进行冗长的操作。但是需要将必要的数据发布到队列中，并从一个较低优先级的任务中处理。由于 station 在断开连接时不会收到任何数据包，只有在连接时才会收到来自 AP 的数据包，因此建议通过调用函数*esp_wifi_set_promiscuous()*使能 Sniffer 模式接收更多 CSI 数据。

4.35.25 Wi-Fi HT20/40

ESP32 支持 Wi-Fi 带宽 HT20 或 HT40，不支持 HT20/40 共存，调用函数*esp_wifi_set_bandwidth()*可改变 station/AP 的默认带宽。ESP32 station 和 AP 的默认带宽为 HT40。

Station 模式下，实际带宽首先在 Wi-Fi 连接时协商。只有当 station 和所连 AP 都支持 HT40 时，带宽才为 HT40，否则为 HT20。如果所连的 AP 的带宽发生变化，则在不断开 Wi-Fi 连接的情况下再次协商实际带宽。

同样，在 AP 模式下，在 AP 与所连 station 协商实际带宽。如果 AP 和其中一个 station 支持 HT40，则为 HT40，否则为 HT20。

在 Station/AP 共存模式下，station 和 AP 都可独立配置为 HT20/40。如果 station 和 AP 都协商为 HT40，由于 ESP32 中，station 的优先级总高于 AP，HT40 信道是 station 的信道。例如，AP 的配置带宽为 HT40，配置的主信道为 6，配置的辅助信道为 10。如果，station 所连路由器的主信道为 6、辅助信道为 2，AP 的实际信道将自动更改为主 6 和辅 2。

理论上，HT40 可以获得更大的吞吐量，因为 HT40 的最大原始 PHY 数据速率为 150Mbps，而 HT20 为 72Mbps。但是，如果设备在某些特殊环境中使用，例如，ESP32 周围其他 Wi-Fi 设备过多，HT40 的性能可能会降低。因此，如果应用程序需要支持相同或类似的情况，建议始终将带宽配置为 HT20。

4.35.26 Wi-Fi QoS

ESP32 支持 WFA Wi-Fi QoS 认证所要求的所有必备功能。

Wi-Fi 协议中定义了四个 AC （访问类别），每个 AC 有各自的优先级访问 Wi-Fi 信道。此外，还定义了映射规则以映射其他协议的 QoS 优先级，例如 802.11D 或 TCP/IP 到 Wi-Fi AC。

下表描述 ESP32 中 IP 优先级如何映射到 Wi-Fi AC，还指明此 AC 是否支持 AMPDU。该表按优先级降序排列，即 AC_VO 拥有最高优先级。

IP 优先级	Wi-Fi AC	是否支持 AMPDU
6, 7	AC_VO (Voice)	否
4, 5	AC_VI (Video)	是
3, 0	AC_BE (Best Effort)	是
1, 2	AC_BK (Background)	是

应用程序可以通过套接字选项 IP_TOS 配置 IP 优先级使用 QoS 功能。下面是使套接字使用 VI 队列的示例:

```
const int ip_precedence_vi = 4;
const int ip_precedence_offset = 5;
int priority = (ip_precedence_vi << ip_precedence_offset);
setsockopt(socket_id, IPPROTO_IP, IP_TOS, &priority, sizeof(priority));
```

理论上，高优先级的 AC 比低优先级 AC 具有更好的性能，但并非总是如此，下面是一些关于如何使用 Wi-Fi QoS 的建议：

- 可以把一些真正重要的应用程序流量放到 AC_VO 队列中。避免通过 AC_VO 队列发送大流量。一方面，AC_VO 队列不支持 AMPDU，如果流量很大，性能不会优于其他队列。另一方面，可能会影响同样使用 AC_VO 队列的管理帧。

- 避免使用 AMPDU 支持的、两个以上的不同优先级，比如 socket A 使用优先级 0，socket B 使用优先级 1，socket C 使用优先级 2。因为可能需要更多的内存，不是好的设计。具体来说，Wi-Fi 驱动程序可能会为每个优先级生成一个 Block Ack 会话，如果设置了 Block Ack 会话，则需要更多内存。

4.35.27 Wi-Fi AMSDU

ESP32 支持接收和发送 AMSDU。开启 AMSDU 发送比较消耗内存，默认不开启 AMSDU 发送。可通过选项*CONFIG_ESP32_WIFI_AMSDU_TX_ENABLED* 使能 AMSDU 发送功能，但是使能 AMSDU 发送依赖于*CONFIG_ESP32_SPIRAM_SUPPORT* 。

4.35.28 Wi-Fi 分片

支持 Wi-Fi 接收分片，但不支持 Wi-Fi 发送分片。

4.35.29 WPS 注册

在 Wi-Fi 模式 WIFI_MODE_STA 或 WIFI_MODE_APSTA 下，ESP32 支持 WPS 注册功能。目前，ESP32 支持的 WPS enrollee 类型有 PBC 和 PIN。

4.35.30 Wi-Fi 缓冲区使用情况

本节只介绍动态缓冲区配置。

缓冲区配置的重要性

为了获得一个具有强健、高性能的系统，我们需要非常谨慎地考虑内存的使用或配置情况，因为：

- ESP32 的可用内存有限。
- 目前，LwIP 和 Wi-Fi 驱动程序中默认的缓冲区类型是“动态”，**意味着 LwIP 和 Wi-Fi 都与应用程序共享内存**。程序员应该时刻牢记这一点，否则将面临如“堆内存耗尽”等的内存问题。
- “堆耗尽”情况非常危险，会导致 ESP32 出现“未定义行为”。因此，应该为应用程序预留足够的堆内存，防止耗尽。
- Wi-Fi 的吞吐量很大程度上取决于与内存相关的配置，如 TCP 窗口大小、Wi-Fi 接收/发送数据动态缓冲区数量等。
- ESP32 LwIP/Wi-Fi 可能使用的堆内存峰值取决于许多因素，例如应用程序可能拥有的最大 TCP/UDP 连接等。
- 在考虑内存配置时，应用程序所需的总内存也是一个重要因素。

由于这些原因，不存在一个适合所有应用程序的配置。相反，我们必须为每个不同的应用程序考虑不同的内存配置。

动态与静态缓冲区

Wi-Fi 驱动程序中默认的缓存类型是“动态”。大多数情况下，动态缓冲区可以极大地节省内存。但是因为应用程序需要考虑 Wi-Fi 的内存使用情况，会给应用程序编程造成一定的难度。

lwIP 还在 TCP/IP 层分配缓冲区，这种缓冲区分配也是动态的。具体内容，见 lwIP 文档内存使用和性能部分。

Wi-Fi 动态缓冲区峰值

Wi-Fi 驱动程序支持多种类型的缓冲区（参考*Wi-Fi 缓冲区配置*）。但本节只介绍 Wi-Fi 动态缓冲的使用方法 Wi-Fi 使用的堆内存峰值是 Wi-Fi 驱动程序 **理论上消耗的最大内存**。通常，该内存峰值取决于：

- 配置的动态接收数据缓冲区数：wifi_rx_dynamic_buf_num
- 配置的动态发送数据缓冲区数：wifi_tx_dynamic_buf_num
- Wi-Fi 驱动程序可以接收的最大数据包：wifi_rx_pkt_size_max
- Wi-Fi 驱动程序可以发送的最大数据包：wifi_tx_pkt_size_max

因此，Wi-Fi 驱动程序消耗的内存峰值可以用下面的公式计算：

wifi_dynamic_peek_memory = (wifi_rx_dynamic_buf_num * wifi_rx_pkt_size_max) + (wifi_tx_dynamic_buf_num * wifi_tx_pkt_size_max)

一般情况下，不需要关心动态发送数据长缓冲区和超长缓冲区，因为它们是管理帧，对系统的影响很小。

4.35.31 如何提高 Wi-Fi 性能

ESP32 Wi-Fi 的性能收到许多参数的影响，各参数之间存在相互制约。如果配置地合理，不仅可以提高性能，还可以增加应用程序的可用内存，提高稳定性。

在本节中，我们将简单介绍 Wi-Fi/LWIP 协议栈的工作模式，并说明各个参数的作用。我们将推荐几种配置等级，您可以根据使用场景选择合适的等级。

协议栈工作模式

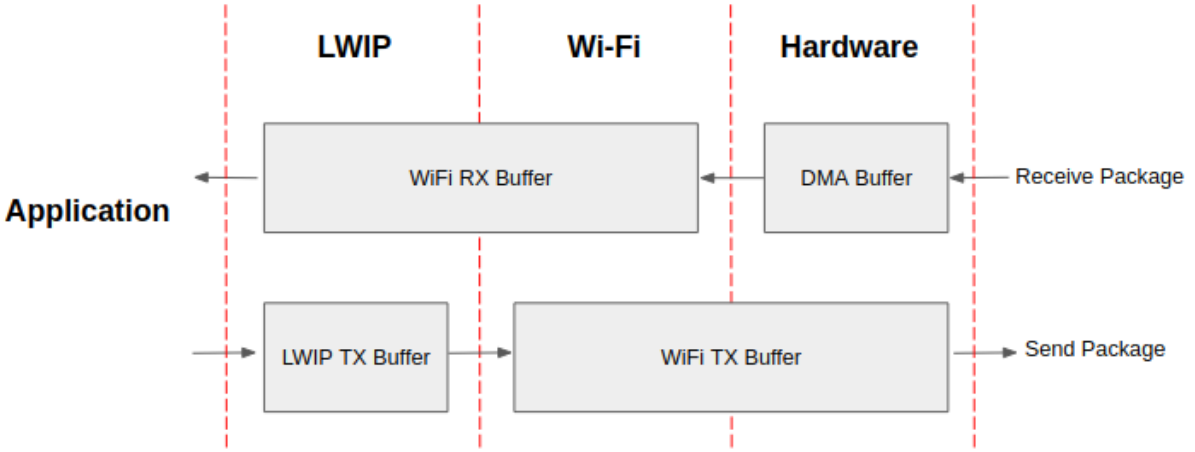

图 57: ESP32 数据路径

ESP32 协议栈分为四层，分别为应用层、LWIP 层、Wi-Fi 层和硬件层。

- 在接收过程中，硬件将接收到的数据包放入 DMA 缓冲区，然后依次传送到 Wi-Fi 的接收数据缓冲区、LWIP 的接收数据缓冲区进行相关协议处理，最后传送到应用层。Wi-Fi 的接收数据缓冲区和 LWIP 的接收数据缓冲区默认共享同一个缓冲区。也就是说，Wi-Fi 默认将数据包转发到 LWIP 作为参考。
- 在发送过程中，应用程序首先将要发送的消息复制到 LWIP 层的发送数据缓冲区，进行 TCP/IP 封装。然后将消息发送到 Wi-Fi 层的发送数据缓冲区进行 MAC 封装，最后等待发送。

参数

适当增加上述缓冲区的大小或数量，可以提高 Wi-Fi 性能，但同时，会减少应用程序的可用内存。下面我们将介绍您需要配置的参数：

接收数据方向：

- ***CONFIG_ESP32_WIFI_STATIC_RX_BUFFER_NUM*** 该参数表示硬件层的 DMA 缓冲区数量。提高该参数将增加发送方的一次性接收吞吐量，从而提高 Wi-Fi 协议栈处理突发流量的能力。
- ***CONFIG_ESP32_WIFI_DYNAMIC_RX_BUFFER_NUM*** 该参数表示 Wi-Fi 层中接收数据缓冲区的数量。提高该参数可以增强数据包的接收性能。该参数需要与 LWIP 层的接收数据缓冲区大小相匹配。
- ***CONFIG_ESP32_WIFI_RX_BA_WIN*** 该参数表示接收端 AMPDU BA 窗口的大小，应配置为*CONFIG_ESP32_WIFI_STATIC_RX_BUFFER_NUM* 和*CONFIG_ESP32_WIFI_DYNAMIC_RX_BUFFER_NUM* 的二倍数值中较小的数值。
- ***CONFIG_LWIP_TCP_WND_DEFAULT*** 该参数表示 LWIP 层用于每个 TCP 流的的接收数据缓冲区大小，应配置为 WIFI_DYNAMIC_RX_BUFFER_NUM(KB) 的值，从而实现高稳定性能。同时，在有多个流的情况下，应相应降低该参数。

发送数据方向：

- ***CONFIG_ESP32_WIFI_STATIC_TX_BUFFER_NUM*** 该参数表示发送数据缓冲区的类型，建议配置为动态缓冲区，该配置可以充分利用内存。
- ***CONFIG_ESP32_WIFI_DYNAMIC_TX_BUFFER_NUM*** 该参数表示 Wi-Fi 层发送数据缓冲区数量。提高该参数可以增强数据包发送的性能。该参数值需要与 LWIP 层的发送数据缓冲区大小相匹配。
- ***CONFIG_LWIP_TCP_SND_BUF_DEFAULT*** 该参数表示 LWIP 层用于每个 TCP 流的的发送数据缓冲区大小，应配置为 WIFI_DYNAMIC_TX_BUFFER_NUM(KB) 的值，从而实现高稳定性能。在有多个流的情况下，应相应降低该参数。

通过在 IRAM 中放置代码优化吞吐量：

- ***CONFIG_ESP32_WIFI_IRAM_OPT*** 如果使能该选项，一些 Wi-Fi 功能将被移至 IRAM，从而提高吞吐量，IRAM 使用量将增加 15 kB。
- ***CONFIG_ESP32_WIFI_RX_IRAM_OPT*** 如果使能该选项，一些 Wi-Fi 接收数据功能将被移至 IRAM，从而提高吞吐量，IRAM 使用量将增加 16 kB。
- ***CONFIG_LWIP_IRAM_OPTIMIZATION*** 如果使能该选项，一些 LWIP 功能将被移至 IRAM，从而提高吞吐量，IRAM 使用量将增加 13 kB。

注解： 上述的缓冲区大小固定为 1.6 KB。

如何配置参数

ESP32 的内存由协议栈和应用程序共享。

在这里，我们给出了几种配置等级。在大多数情况下，您应根据应用程序所占用内存的大小，选择合适的等级进行参数配置。

下表中未提及的参数应设置为默认值。

等级	Iperf	发送数据优先	高性能	接收数据优先	默认值	节省内存	最小
可用内存 (KB)	37.1	113.8	123.3	145.5	144.5	170.2	185.2
WIFI_STATIC_RX_BUFFER_NUM	16	6	6	6	6	6	4
WIFI_DYNAMIC_RX_BUFFER_NUM	64	16	24	34	20	12	8
WIFI_DYNAMIC_TX_BUFFER_NUM	64	32	24	18	20	12	8
WIFI_RX_BA_WIN	32	8	12	12	10	6	禁用
TCP_SND_BUF_DEFAULT (KB)	65	28	24	18	20	12	8
TCP_WND_DEFAULT (KB)	65	16	24	34	20	12	8
WIFI_IRAM_OPT	15	15	15	15	15	15	15
WIFI_RX_IRAM_OPT	16	16	16	16	16	16	16
LWIP_IRAM_OPTIMIZATION	13	13	13	13	13	13	13
TCP 发送数据吞吐量 (Mbit/s)	74.6	50.8	46.5	39.9	44.2	33.8	25.6
TCP 接收数据吞吐量 (Mbit/s)	63.6	35.5	42.3	48.5	40.5	30.1	27.8
UDP 发送数据吞吐量 (Mbit/s)	76.2	75.1	74.1	72.4	69.6	64.1	36.5
UDP 接收数据吞吐量 (Mbit/s)	83.1	66.3	75.1	75.6	73.1	65.3	54.7

注解: 以上结果由使用华硕 RT-N66U 路由器，在屏蔽箱中进行单流测试得出。ESP32 的 CPU 为双核，频率为 240 MHz，flash 为 QIO 模式，频率为 80 MHz。

等级:

- **Iperf 等级** ESP32 的极端性能等级，用于测试极端性能。
- **高性能等级** ESP32 的高性能配置等级，适用于应用程序占用内存较少且有高性能要求的场景。在该等级中，您可以根据使用场景选择使用接收数据优先等级或发送数据优先等级。
- **默认等级** IDF_TARGET_NAME} 的默认配置等级、兼顾可用内存和性能。
- **节省内存等级** 该等级适用于应用程序需要大量内存的场景，在这一等级下，收发器的性能会有所降低。
- **最小等级** ESP32 的最小配置等级。协议栈只使用运行所需的内存。适用于对性能没有要求，而应用程序需要大量内存的场景。

使用 PSRAM

PSRAM 一般在应用程序占用大量内存时使用。在该模式下，*CONFIG_ESP32_WIFI_TX_BUFFER* 被强制为静态。*CONFIG_ESP32_WIFI_STATIC_TX_BUFFER_NUM* 表示硬件层 DMA 缓冲区数量，提高这一参数可以增强性能。我们推荐以下 PSRAM 等级。

等级	Iperf	默认	节省内存	最小
可用内存 (KB)	113.8	152.4	181.2	202.6
WIFI_STATIC_RX_BUFFER_NUM	16	8	4	2
WIFI_DYNAMIC_RX_BUFFER_NUM	128	128	128	128
WIFI_STATIC_TX_BUFFER_NUM	16	8	4	2
WIFI_RX_BA_WIN	16	16	8	禁用
TCP_SND_BUF_DEFAULT (KB)	65	65	65	65
TCP_WND_DEFAULT (KB)	65	65	65	65
WIFI_IRAM_OPT	15	15	15	0
WIFI_RX_IRAM_OPT	16	16	0	0
LWIP_IRAM_OPTIMIZATION	1	0	0	0
TCP 发送数据吞吐量 (Mbit/s)	37.5	31.7	21.7	14.6
TCP 接收数据吞吐量 (Mbit/s)	31.5	29.8	26.5	21.1
UDP 发送数据吞吐量 (Mbit/s)	69.1	31.5	27.1	24.1
UDP 接收数据吞吐量 (Mbit/s)	40.1	38.5	37.5	36.9

4.35.32 Wi-Fi Menuconfig

Wi-Fi 缓冲区配置

如果您要修改默认的缓冲区数量或类型，最好也了解缓冲区在数据路径中是如何分配或释放的。下图显示了发送数据方向的这一过程。

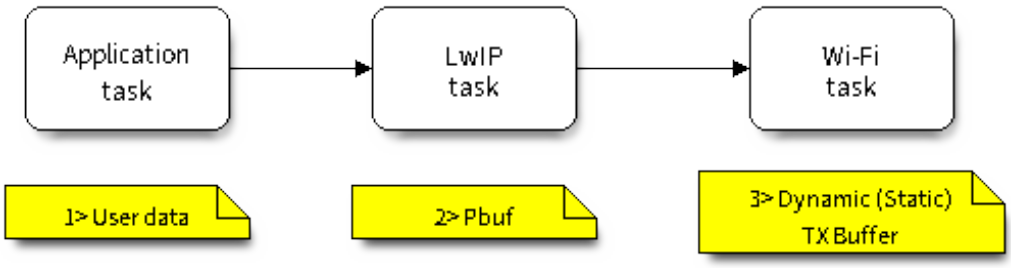

图 58: TX Buffer Allocation

描述：

- 应用程序分配需要发送的数据。
- 应用程序调用 TCPIP 或套接字相关的 API 发送用户数据。这些 API 会分配一个在 LwIP 中使用的 PBUF，并复制用户数据。
- 当 LwIP 调用 Wi-Fi API 发送 PBUF 时，Wi-Fi API 会分配一个“动态发送数据缓冲区”或“静态发送数据缓冲区”，并复制 LwIP PBUF，最后发送数据。

下图展示了如何在接收数据方向分配或释放缓冲区：

描述：

- Wi-Fi 硬件在空中接收到数据包后，将数据包内容放到“静态接收数据缓冲区”，也就是“接收数据 DMA 缓冲区”。
- Wi-Fi 驱动程序分配一个“动态接收数据缓冲区”、复制“静态接收数据缓冲区”，并将“静态接收数据缓冲区”返回给硬件。

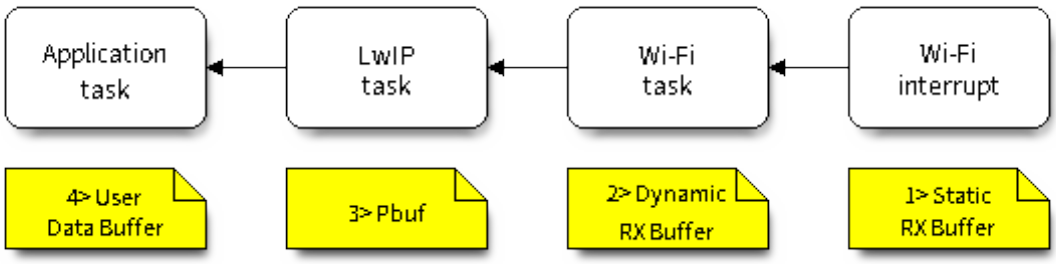

图 59: 接收数据缓冲区分配

- Wi-Fi 驱动程序将数据包传送到上层 (LwIP)，并分配一个 PBUF 用于存放“动态接收数据缓冲区”。
- 应用程序从 LwIP 接收数据。

下表是 Wi-Fi 内部缓冲区的配置情况。

缓冲区类型	分配类型	默认	是否可配置	描述
静态接收数据缓冲区（硬件接收数据缓冲区）	静态	10 * 1600 Bytes	是	这是一种 DMA 内存，在函数 `esp_wifi_init()` 中初始化，在函数 `esp_wifi_deinit()` 中释放。该缓冲区形成硬件接收列表。当通过空中接收到一个帧时，硬件将该帧写入缓冲区，并向 CPU 发起一个中断。然后，Wi-Fi 驱动程序从缓冲区中读取内容，并将缓冲区返回到列表中。 如果应用程序希望减少 Wi-Fi 静态分配的内存，可以将该值从 10 减少到 6，从而节省 6400 Bytes 的内存。除非禁用 AMPDU 功能，否则不建议将该值降低到 6 以下。
动态接收数据缓冲区	动态	32	是	缓冲区的长度可变，取决于所接收帧的长度。当 Wi-Fi 驱动程序从“硬件接收数据缓冲区”接收到一帧时，需要从堆中分配“动态接收数据缓冲区”。在 Menuconfig 中配置的“动态接收数据缓冲区”数量用来限制未释放的“动态接收数据缓冲区”总数量。
动态发送数据缓冲区	动态	32	是	这是一种 DMA 内存，位于堆内存中。当上层 (LwIP) 向 Wi-Fi 驱动程序发送数据包时，该缓冲区首先分配一个“动态发送数据缓冲区”，并复制上层缓冲区。 动态发送数据缓冲区和静态发送数据缓冲区相互排斥。
静态发送数据缓冲区	静态	16 * 1600 Bytes	是	这是一种 DMA 内存，在函数 `esp_wifi_init()` 中初始化，在函数 `esp_wifi_deinit()` 中释放。当上层 (LwIP) 向 Wi-Fi 驱动程序发送数据包时，该缓冲区首先分配一个“静态发送数据缓冲区”，并复制上层缓冲区。 动态发送数据缓冲区和静态发送数据缓冲区相互排斥。 由于发送数据缓冲区必须是 DMA 缓冲区，所以当使能 PSRAM 时，发送数据缓冲区必须是静态的。
管理短缓冲区	动态	8	否	Wi-Fi 驱动程序的内部缓冲区。
管理长缓冲区	动态	32	否	Wi-Fi 驱动程序的内部缓冲区。
管理超长缓冲区	动态	32	否	Wi-Fi 驱动程序的内部缓冲区。

Wi-Fi NVS Flash

如果使能 Wi-Fi NVS flash，所有通过 Wi-Fi API 设置的 Wi-Fi 配置都会被存储到 flash 中，Wi-Fi 驱动程序在下次开机或重启时将自动加载这些配置。但是，应用程序可视情况禁用 Wi-Fi NVS flash，例如：其配置信息不需要存储在非易失性内存中、其配置信息已安全备份，或仅出于某些调试原因等。

Wi-Fi AMPDU

ESP32 同时支持接收和发送 AMPDU，AMPDU 可以大大提高 Wi-Fi 的吞吐量。

通常，应使能 AMPDU。禁用 AMPDU 通常用于调试目的。

4.35.33 故障排除

请见*乐鑫 Wireshark 使用指南*。

乐鑫 Wireshark 使用指南

1. 概述

1.1 什么是 Wireshark？ Wireshark（原称 Ethereal）是一个网络封包分析软件。网络封包分析软件的功能是撷取网络封包，并尽可能显示出最为详细的网络封包资料。Wireshark 使用 WinPCAP 作为接口，直接与网卡进行数据报文交换。

网络封包分析软件的功能可想像成“电工技师使用电表来量测电流、电压、电阻”的工作，只是将场景移植到网络上，并将电线替换成网线。

在过去，网络封包分析软件是非常昂贵，或是专门属于营利用的软件。Wireshark 的出现改变了这一切。

在 GNU GPL 通用许可证的保障范围下，使用者可以以免费的代价取得软件与其源代码，并拥有针对其源代码修改及客制化的权利。

Wireshark 是目前全世界最广泛的网络封包分析软件之一。

1.2 Wireshark 的主要应用 下面是 Wireshark 一些应用的举例：

- 网络管理员用来解决网络问题
- 网络安全工程师用来检测安全隐患
- 开发人员用来测试协议执行情况
- 用来学习网络协议

除了上面提到的，Wireshark 还可以用在其它许多场合。

1.3 Wireshark 的特性

- 支持 UNIX 和 Windows 平台
- 在接口实时捕捉包
- 能详细显示包的详细协议信息
- 可以打开/保存捕捉的包
- 可以导入导出其他捕捉程序支持的包数据格式
- 可以通过多种方式过滤包
- 多种方式查找包
- 通过过滤以多种色彩显示包
- 创建多种统计分析
- 等等

1.4 Wireshark 的“能”与“不能”？

- **捕捉多种网络接口**
  Wireshark 可以捕捉多种网络接口类型的包，哪怕是无线局域网接口。
- **支持多种其它程序捕捉的文件**
  Wireshark 可以打开多种网络分析软件捕捉的包。
- **支持多格式输出**
  Wireshark 可以将捕捉文件输出为多种其他捕捉软件支持的格式。

- **对多种协议解码提供支持**
  Wireshark 可以支持许多协议的解码。
- **Wireshark 不是入侵检测系统**
  如果您的网络中存在任何可疑活动，Wireshark 并不会主动发出警告。不过，当您希望对这些可疑活动一探究竟时，Wireshark 可以发挥作用。
- **Wireshark 不会处理网络事务，它仅仅是“测量”（监视）网络**
  Wireshark 不会发送网络包或做其它交互性的事情（名称解析除外，但您也可以禁止解析）。

2. 如何获取 Wireshark 官网链接：https://www.wireshark.org/download.html

Wireshark 支持多种操作系统，请在下载安装文件时，注意选择与您所用操作系统匹配的安装文件。

3. 使用步骤 **本文档仅以 Linux 系统下的 Wireshark（版本号：2.2.6）为例。**

1) 启动 Wireshark

Linux 下，可编写一个 Shell 脚本，运行该文件即可启动 Wireshark 配置抓包网卡和信道。Shell 脚本如下：

```
ifconfig $1 down
iwconfig $1 mode monitor
iwconfig $1 channel $2
ifconfig $1 up
Wireshark&
```

脚本中有两个参数：`$1` 和 `$2`，分别表示网卡和信道，例如，`./xxx.sh wlan0 6`（此处，`wlan0` 即为抓包使用的网卡，后面的数字 `6` 即为 AP 或 soft-AP 所在的 channel）。

2) 运行 Shell 脚本打开 Wireshark，会出现 Wireshark 抓包开始界面

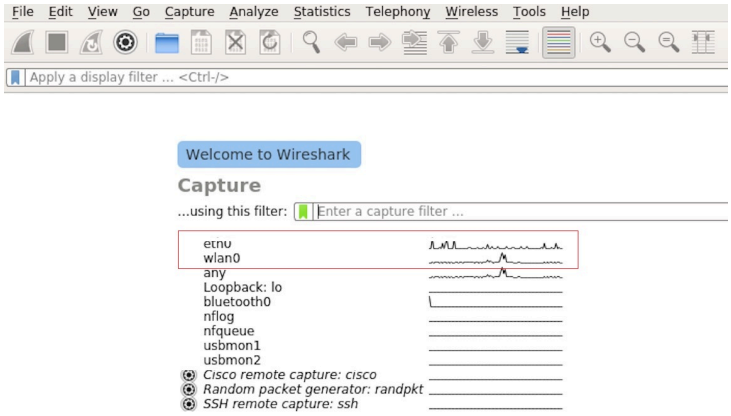

图 60: Wireshark 抓包界面

3) 选择接口，开始抓包

从上图红色框中可以看到有多个接口，第一个为本地网卡，第二个为无线网络。

可根据自己的需求选取相应的网卡，本文是以利用无线网卡抓取空中包为例进行简单说明。

双击 *wlan0* 即可开始抓包。

4) 设置过滤条件

抓包过程中会抓取到同信道所有的空中包，但其实很多都是我们不需要的，因此很多时候我们会设置抓包的过滤条件从而得到我们想要的包。

下图中红色框内即为设置 filter 的位置。

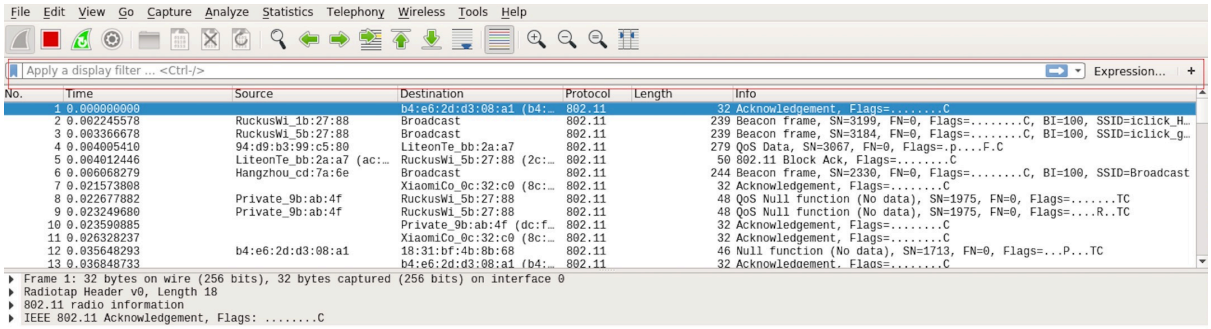

图 61: 设置 Wireshark 过滤条件

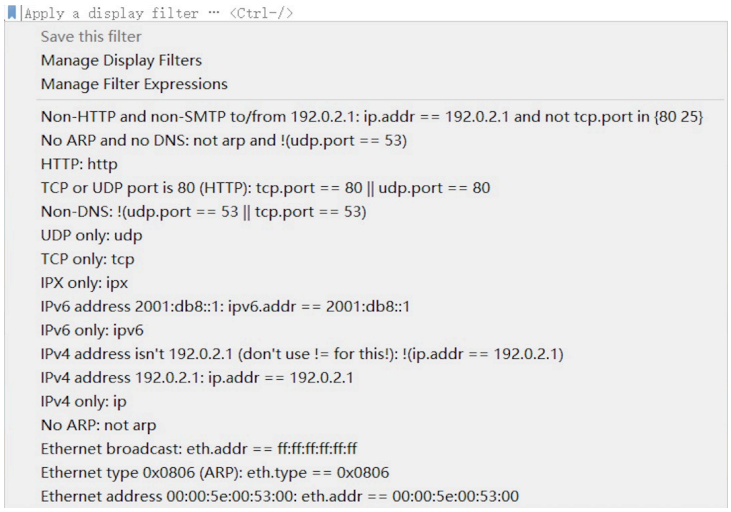

图 62: *Display Filter* 对话框

点击 *Filter* 按钮（下图的左上角蓝色按钮）会弹出 *display filter* 对话框。

点击 *Expression* 按钮，会出现 *Filter Expression* 对话框，在此你可以根据需求进行 filter 的设置。

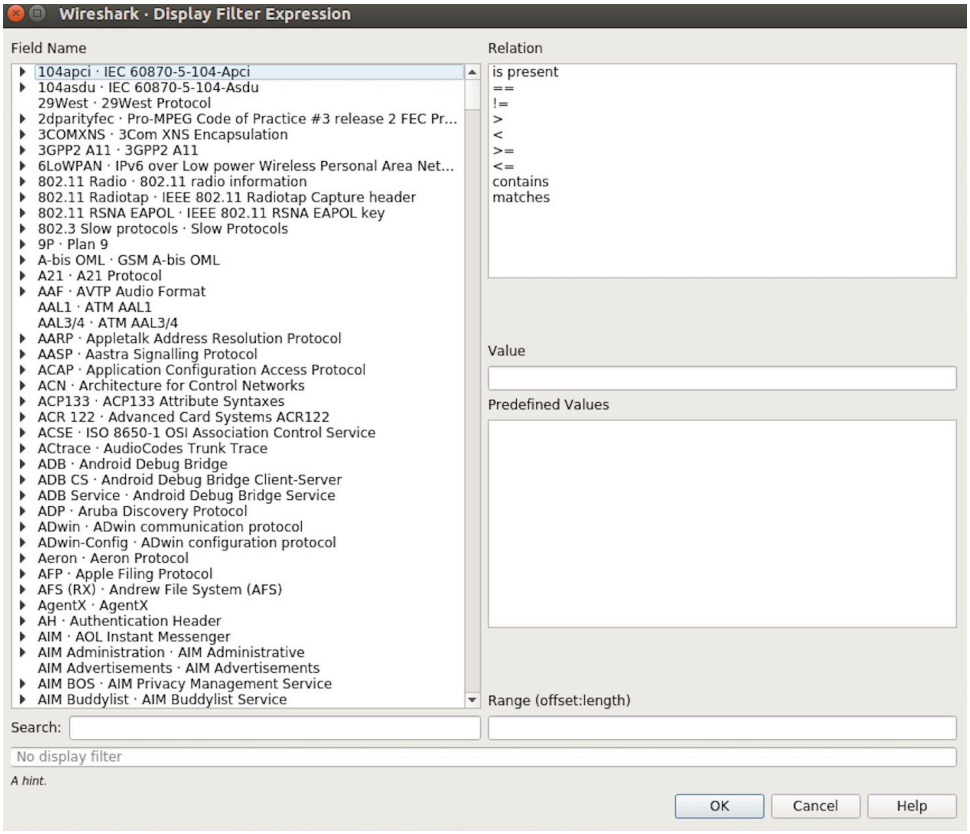

图 63: *Filter Expression* 对话框

最直接的方法：直接在工具栏上输入过滤条件。

图 64: 过滤条件工具栏

点击在此区域输入或修改显示的过滤字符，在输入过程中会进行语法检查。如果您输入的格式不正确，或者未输入完成，则背景显示为红色。直到您输入合法的表达式，背景会变为绿色。你可以点击下拉列表选择您先前键入的过滤字符。列表会一直保留，即使您重新启动程序。

例如：下图所示，直接输入 2 个 MAC 作为过滤条件，点击 *Apply*（即图中的蓝色箭头），则表示只抓取 2 个此 MAC 地址之间的交互的包。

图 65: 在过滤条件工具栏中运用 MAC 地址过滤示例

5) 封包列表

若想查看包的具体的信息只需要选中要查看的包，在界面的下方会显示出包的具体的格式和包的内容。

如上图所示，我要查看第 1 个包，选中此包，图中红色框中即为包的具体内容。

6) 停止/开始包的捕捉

若要停止当前抓包，点击下图的红色按钮即可。

若要重新开始抓包，点击下图左上角的蓝色按钮即可。

7) 保存当前捕捉包

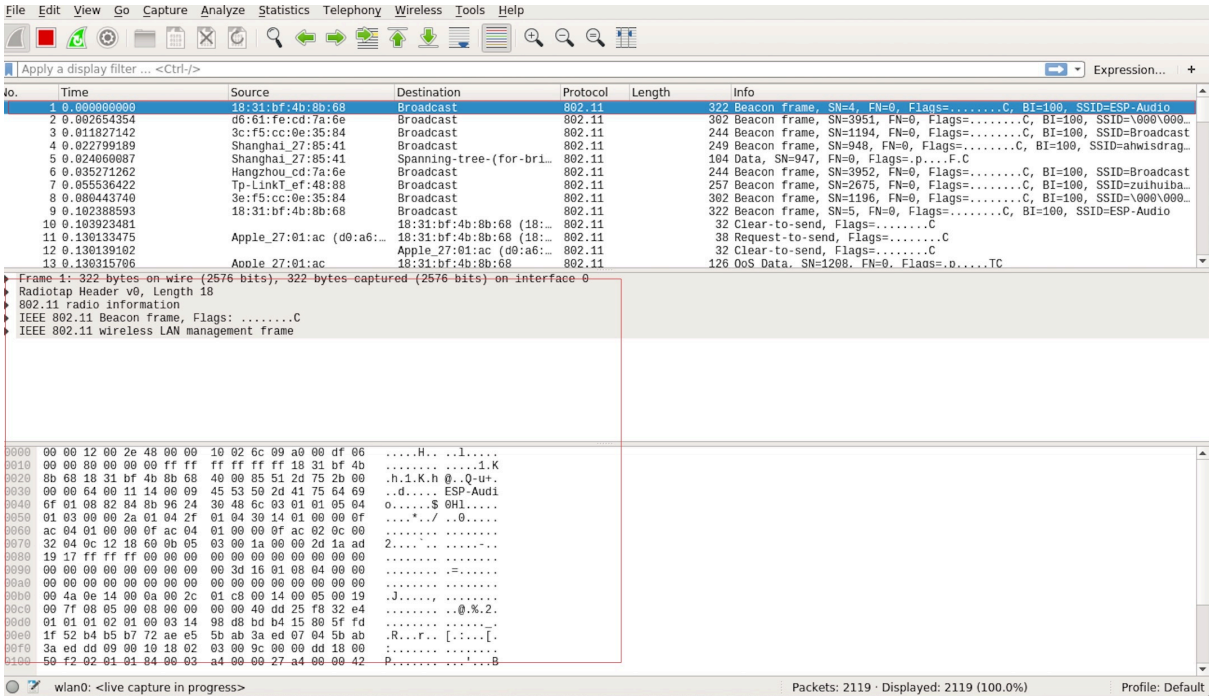

图 66: 封包列表具体信息示例

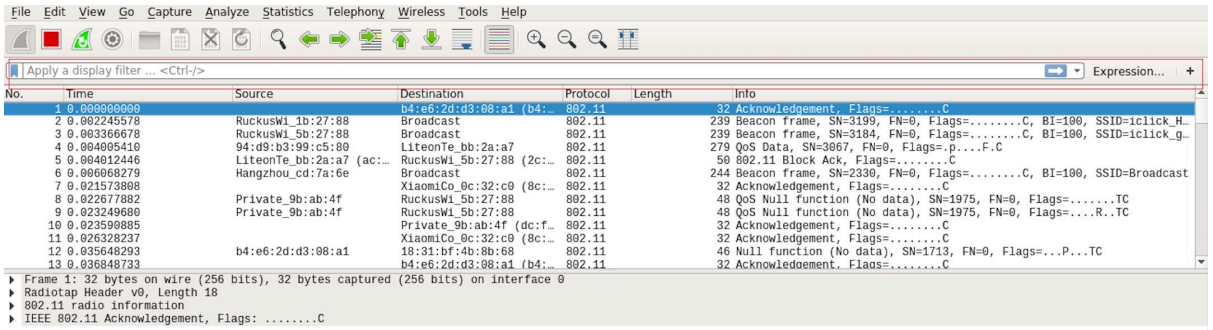

图 67: 停止包的捕捉

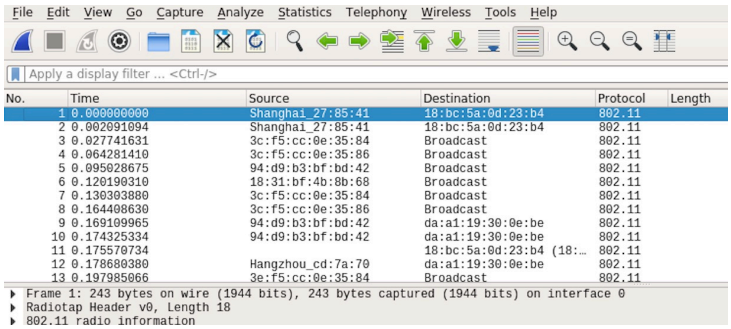

图 68: 开始或继续包的捕捉

Linux 下，可以通过依次点击“File” -> “Export Packet Dissections” -> “As Plain Text File”进行保存。

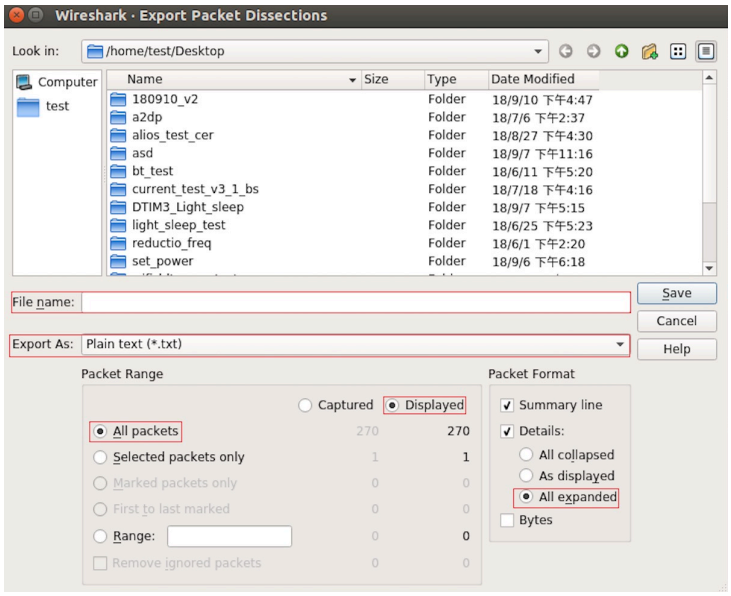

图 69: 保存捕捉包

上图中，需要注意的是，选择 *All packets*、*Displayed* 以及 *All expanded* 三项。

Wireshark 捕捉的包可以保存为其原生格式文件（libpcap），也可以保存为其他格式（如.txt 文件）供其他工具进行读取分析。

4.36 Wi-Fi Security

4.36.1 ESP32 Wi-Fi Security Features

- Support for Protected Management Frames (PMF)
- Support for WPA3-Personal

In addition to traditional security methods (WEP/WPA-TKIP/WPA2-CCMP), ESP32 Wi-Fi supports state-of-the-art security protocols, namely Protected Management Frames based on 802.11w standard and Wi-Fi Protected Access 3 (WPA3-Personal). Together, PMF and WPA3 provide better privacy and robustness against known attacks on traditional modes.

4.36.2 Protected Management Frames (PMF)

Introduction

In Wi-Fi, management frames such as beacons, probes, (de)authentication, (dis)association are used by non-AP stations to scan and connect to an AP. Unlike data frames, these frames are sent unencrypted. An attacker can use eavesdropping and packet injection to send spoofed (de)authentication/(dis)association frames at the right time, leading to the following attacks in case of unprotected management frame exchanges.

- DOS attack on one or all clients in the range of the attacker.
- Tearing down existing association on AP side by sending association request.
- Forcing a client to perform 4-way handshake again in case PSK is compromised in order to get PTK.
- Getting SSID of hidden network from association request.
- Launching man-in-the-middle attack by forcing clients to deauth from legitimate AP and associating to a rogue one.

PMF provides protection against these attacks by encrypting unicast management frames and providing integrity checks for broadcast management frames. These include deauthentication, disassociation and robust management frames. It also provides Secure Association (SA) teardown mechanism to prevent spoofed association/authentication frames from disconnecting already connected clients.

There are 3 types of PMF configuration modes on both Station and AP side -

- PMF Optional
- PMF Required
- PMF Disabled

Depending on the PMF configuration on Station and AP side, the resulting connection will behave differently. Below table summarises all possible outcomes.

STA Setting	AP Setting	Outcome
PMF Optional	PMF Optional/Required	Mgmt Frames Protected
PMF Optional	PMF Disabled	Mgmt Frames Not Protected
PMF Required	PMF Optional/Required	Mgmt Frames Protected
PMF Required	PMF Disabled	STA refuses Connection
PMF Disabled	PMF Optional/Disabled	Mgmt Frames Not Protected
PMF Disabled	PMF Required	AP refuses Connection

API & Usage

ESP32 supports PMF only in Station mode. Station defaults to PMF Optional mode and disabling PMF is not possible. For even higher security, PMF required mode can be enabled by setting the `required` flag in *pmf_cfg* while using the *esp_wifi_set_config()* API. This will result in Station only connecting to a PMF enabled AP and rejecting all other AP's. An example of this configuration is given below.

```
wifi_config_t wifi_config = {
    .sta = {
         .ssid = EXAMPLE_WIFI_SSID,
         .password = EXAMPLE_WIFI_PASSWORD,
         .pmf_cfg = {
            .required = true
         }
    }
};
```

注意: `capable` flag in *pmf_cfg* is deprecated and set to true internally. This is to take the additional security benefit of PMF whenever possible.

4.36.3 WPA3-Personal

Introduction

Wi-Fi Protected Access-3 (WPA3) is a set of enhancements to Wi-Fi access security intended to replace the current WPA2 standard. It includes new features and capabilities that offer significantly better protection against different types of attacks. It improves upon WPA2-Personal in following ways:

- WPA3 uses Simultaneous Authentication of Equals (SAE), which is password-authenticated key agreement method based on Diffie-Hellman key exchange. Unlike WPA2, the technology is resistant to offline-dictionary attack, where the attacker attempts to determine shared password based on captured 4-way handshake without any further network interaction.
- Disallows outdated protocols such as TKIP, which is susceptible to simple attacks like MIC key recovery attack.
- Mandates Protected Management Frames (PMF), which provides protection for unicast and multicast robust management frames which include Disassoc and Deauth frames. This means that the attacker cannot disrupt

an established WPA3 session by sending forged Assoc frames to the AP or Deauth/Disassoc frames to the Station.
- Provides forward secrecy, which means the captured data cannot be decrypted even if password is compromised after data transmission.

Please refer to Security section of Wi-Fi Alliance' s official website for further details.

Setting up WPA3 with ESP32

In IDF Menuconfig under Wi-Fi component, a config option "Enable WPA3-Personal" is provided to Enable/Disable WPA3. By default it is kept enabled, if disabled ESP32 will not be able to establish a WPA3 connection. Currently, WPA3 is supported only in the Station mode. Additionally, since PMF is mandated by WPA3 protocol, PMF Mode should be set to either Optional or Required while setting WiFi config.

Refer to *Protected Management Frames (PMF)* on how to set this mode.

After these settings are done, Station is ready to use WPA3-Personal. Application developers need not worry about the underlying security mode of the AP. WPA3-Personal is now the highest supported protocol in terms of security, so it will be automatically selected for the connection whenever available. For example, if an AP is configured to be in WPA3 Transition Mode, where it will advertise as both WPA2 and WPA3 capable, Station will choose WPA3 for the connection with above settings. Note that Wi-Fi stack size requirement will increase 3kB when WPA3 is used.

Chapter 5

Libraries and Frameworks

5.1 Cloud Frameworks

ESP32 supports multiple cloud frameworks using agents built on top of ESP-IDF. Here are the pointers to various supported cloud frameworks' agents and examples:

5.1.1 AWS IoT

https://github.com/espressif/esp-aws-iot is an open source repository for ESP32 based on Amazon Web Services' aws-iot-device-sdk-embedded-C.

5.1.2 Azure IoT

https://github.com/espressif/esp-azure is an open source repository for ESP32 based on Microsoft Azure' s azure-iot-sdk-c SDK.

5.1.3 Google IoT Core

https://github.com/espressif/esp-google-iot is an open source repository for ESP32 based on Google' s iot-device-sdk-embedded-c SDK.

5.1.4 Aliyun IoT

https://github.com/espressif/esp-aliyun is an open source repository for ESP32 based on Aliyun' s iotkit-embedded SDK.

5.1.5 Joylink IoT

https://github.com/espressif/esp-joylink is an open source repository for ESP32 based on Joylink' s joylink_dev_sdk SDK.

5.1.6 Tencent IoT

https://github.com/espressif/esp-welink is an open source repository for ESP32 based on Tencent' s welink SDK.

5.1.7 Tencentyun IoT

https://github.com/espressif/esp-qcloud is an open source repository for ESP32 based on Tencentyun's qcloud-iot-sdk-embedded-c SDK.

5.1.8 Baidu IoT

https://github.com/espressif/esp-baidu-iot is an open source repository for ESP32 based on Baidu's iot-sdk-c SDK.

Chapter 6

Contributions Guide

We welcome contributions to the esp-idf project!

6.1 How to Contribute

Contributions to esp-idf - fixing bugs, adding features, adding documentation - are welcome. We accept contributions via Github Pull Requests.

6.2 Before Contributing

Before sending us a Pull Request, please consider this list of points:

- Is the contribution entirely your own work, or already licensed under an Apache License 2.0 compatible Open Source License? If not then we unfortunately cannot accept it.
- Does any new code conform to the esp-idf *Style Guide*?
- Have you installed the *pre-commit hook* for esp-idf project?
- Does the code documentation follow requirements in 编写代码文档?
- Is the code adequately commented for people to understand how it is structured?
- Is there documentation or examples that go with code contributions? There are additional suggestions for writing good examples in examples readme.
- Are comments and documentation written in clear English, with no spelling or grammar errors?
- Example contributions are also welcome. Please check the 创建示例项目 guide for these.
- If the contribution contains multiple commits, are they grouped together into logical changes (one major change per pull request)? Are any commits with names like "fixed typo" squashed into previous commits?
- If you're unsure about any of these points, please open the Pull Request anyhow and then ask us for feedback.

6.3 Pull Request Process

After you open the Pull Request, there will probably be some discussion in the comments field of the request itself.

Once the Pull Request is ready to merge, it will first be merged into our internal git system for in-house automated testing.

If this process passes, it will be merged onto the public github repository.

6.4 Legal Part

Before a contribution can be accepted, you will need to sign our *Contributor Agreement*. You will be prompted for this automatically as part of the Pull Request process.

6.5 Related Documents

6.5.1 Espressif IoT Development Framework Style Guide

About This Guide

Purpose of this style guide is to encourage use of common coding practices within the ESP-IDF.

Style guide is a set of rules which are aimed to help create readable, maintainable, and robust code. By writing code which looks the same way across the code base we help others read and comprehend the code. By using same conventions for spaces and newlines we reduce chances that future changes will produce huge unreadable diffs. By following common patterns for module structure and by using language features consistently we help others understand code behavior.

We try to keep rules simple enough, which means that they can not cover all potential cases. In some cases one has to bend these simple rules to achieve readability, maintainability, or robustness.

When doing modifications to third-party code used in ESP-IDF, follow the way that particular project is written. That will help propose useful changes for merging into upstream project.

C Code Formatting

Naming

- Any variable or function which is only used in a single source file should be declared `static`.
- Public names (non-static variables and functions) should be namespaced with a per-component or per-unit prefix, to avoid naming collisions. ie `esp_vfs_register()` or `esp_console_run()`. Starting the prefix with `esp_` for Espressif-specific names is optional, but should be consistent with any other names in the same component.
- Static variables should be prefixed with `s_` for easy identification. For example, `static bool s_invert`.
- Avoid unnecessary abbreviations (ie shortening `data` to `dat`), unless the resulting name would otherwise be very long.

Indentation Use 4 spaces for each indentation level. Don't use tabs for indentation. Configure the editor to emit 4 spaces each time you press tab key.

Vertical Space Place one empty line between functions. Don't begin or end a function with an empty line.

```
void function1()
{
    do_one_thing();
    do_another_thing();
                                    // INCORRECT, don't place empty line here
}
                                    // place empty line here
void function2()
{
                                    // INCORRECT, don't use an empty line here
    int var = 0;
    while (var < SOME_CONSTANT) {
        do_stuff(&var);
```

(下页继续)

(续上页)

```
    }
}
```

The maximum line length is 120 characters as long as it doesn't seriously affect the readability.

Horizontal Space Always add single space after conditional and loop keywords:

```
if (condition) {     // correct
    // ...
}

switch (n) {         // correct
    case 0:
        // ...
}

for(int i = 0; i < CONST; ++i) {     // INCORRECT
    // ...
}
```

Add single space around binary operators. No space is necessary for unary operators. It is okay to drop space around multiply and divide operators:

```
const int y = y0 + (x - x0) * (y1 - y0) / (x1 - x0);     // correct

const int y = y0 + (x - x0)*(y1 - y0)/(x1 - x0);         // also okay

int y_cur = -y;                                          // correct
++y_cur;

const int y = y0+(x-x0)*(y1-y0)/(x1-x0);                 // INCORRECT
```

No space is necessary around `.` and `->` operators.

Sometimes adding horizontal space within a line can help make code more readable. For example, you can add space to align function arguments:

```
esp_rom_gpio_connect_in_signal(PIN_CAM_D6,    I2S0I_DATA_IN14_IDX, false);
esp_rom_gpio_connect_in_signal(PIN_CAM_D7,    I2S0I_DATA_IN15_IDX, false);
esp_rom_gpio_connect_in_signal(PIN_CAM_HREF, I2S0I_H_ENABLE_IDX,  false);
esp_rom_gpio_connect_in_signal(PIN_CAM_PCLK, I2S0I_DATA_IN15_IDX, false);
```

Note however that if someone goes to add new line with a longer identifier as first argument (e.g. `PIN_CAM_VSYNC`), it will not fit. So other lines would have to be realigned, adding meaningless changes to the commit.

Therefore, use horizontal alignment sparingly, especially if you expect new lines to be added to the list later.

Never use TAB characters for horizontal alignment.

Never add trailing whitespace at the end of the line.

Braces

- Function definition should have a brace on a separate line:

```
// This is correct:
void function(int arg)
{

}
```

(下页继续)

(续上页)

```
// NOT like this:
void function(int arg) {

}
```

- Within a function, place opening brace on the same line with conditional and loop statements:

```
if (condition) {
    do_one();
} else if (other_condition) {
    do_two();
}
```

Comments Use `//` for single line comments. For multi-line comments it is okay to use either `//` on each line or a `/* */` block.

Although not directly related to formatting, here are a few notes about using comments effectively.

- Don't use single comments to disable some functionality:

```
void init_something()
{
    setup_dma();
    // load_resources();                // WHY is this thing commented, asks␣
↪the reader?
    start_timer();
}
```

- If some code is no longer required, remove it completely. If you need it you can always look it up in git history of this file. If you disable some call because of temporary reasons, with an intention to restore it in the future, add explanation on the adjacent line:

```
void init_something()
{
    setup_dma();
    // TODO: we should load resources here, but loader is not fully integrated␣
↪yet.
    // load_resources();
    start_timer();
}
```

- Same goes for `#if 0 ... #endif` blocks. Remove code block completely if it is not used. Otherwise, add comment explaining why the block is disabled. Don't use `#if 0 ... #endif` or comments to store code snippets which you may need in the future.
- Don't add trivial comments about authorship and change date. You can always look up who modified any given line using git. E.g. this comment adds clutter to the code without adding any useful information:

```
void init_something()
{
    setup_dma();
    // XXX add 2016-09-01
    init_dma_list();
    fill_dma_item(0);
    // end XXX add
    start_timer();
}
```

Line Endings Commits should only contain files with LF (Unix style) endings.

Windows users can configure git to check out CRLF (Windows style) endings locally and commit LF endings by setting the `core.autocrlf` setting. *Github has a document about setting this option <github-line-endings>*. However because MSYS2 uses Unix-style line endings, it is often easier to configure your text editor to use LF (Unix style) endings when editing ESP-IDF source files.

If you accidentally have some commits in your branch that add LF endings, you can convert them to Unix by running this command in an MSYS2 or Unix terminal (change directory to the IDF working directory and check the correct branch is currently checked out, beforehand):

```
git rebase --exec 'git diff-tree --no-commit-id --name-only -r HEAD | xargs␣
↪dos2unix && git commit -a --amend --no-edit --allow-empty' master
```

(Note that this line rebases on master, change the branch name at the end to rebase on another branch.)

For updating a single commit, it' s possible to run `dos2unix FILENAME` and then run `git commit --amend`

Formatting Your Code You can use `astyle` program to format your code according to the above recommendations.

If you are writing a file from scratch, or doing a complete rewrite, feel free to re-format the entire file. If you are changing a small portion of file, don' t re-format the code you didn' t change. This will help others when they review your changes.

To re-format a file, run:

```
tools/format.sh components/my_component/file.c
```

Type Definitions Should be snake_case, ending with _t suffix:

```
typedef int signed_32_bit_t;
```

Enum Enums should be defined through the *typedef* and be namespaced:

```
typedef enum
{
    MODULE_FOO_ONE,
    MODULE_FOO_TWO,
    MODULE_FOO_THREE
} module_foo_t;
```

C++ Code Formatting

The same rules as for C apply. Where they are not enough, apply the following rules.

File Naming C++ Header files have the extension `.hpp`. C++ source files have the extension `.cpp`. The latter is important for the compiler to distiguish them from normal C source files.

Naming

- **Class and struct** names shall be written in `CamelCase` with a capital letter as beginning. Member variables and methods shall be in `snake_case`.
- **Namespaces** shall be in lower `snake_case`.
- **Templates** are specified in the line above the function declaration.
- Interfaces in terms of Object-Oriented Programming shall be named without the suffix `...Interface`. Later, this makes it easier to extract interfaces from normal classes and vice versa without making a breaking change.

Member Order in Classes In order of precedence:

- First put the public members, then the protected, then private ones. Omit public, protected or private sections without any members.
- First put constructors/destructors, then member functions, then member variables.

For example:

```
class ForExample {
public:
    // first constructors, then default constructor, then destructor
    ForExample(double example_factor_arg);
    ForExample();
    ~ForExample();

    // then remaining pubic methods
    set_example_factor(double example_factor_arg);

    // then public member variables
    uint32_t public_data_member;

private:
    // first private methods
    void internal_method();

    // then private member variables
    double example_factor;
};
```

Spacing

- Don't indent inside namespaces.
- Put `public`, `protected` and `private` labels at the same indentation level as the corresponding `class` label.

Simple Example

```
// file spaceship.h
#ifndef SPACESHIP_H_
#define SPACESHIP_H_
#include <cstdlib>

namespace spaceships {

class SpaceShip {
public:
    SpaceShip(size_t crew);
    size_t get_crew_size() const;

private:
    const size_t crew;
};

class SpaceShuttle : public SpaceShip {
public:
    SpaceShuttle();
};

class Sojuz : public SpaceShip {
public:
    Sojuz();
```

(下页继续)

(续上页)

```
};

template <typename T>
class CargoShip {
public:
    CargoShip(const T &cargo);

private:
    T cargo;
};

} // namespace spaceships

#endif // SPACESHIP_H_

// file spaceship.cpp
#include "spaceship.h"

namespace spaceships {

// Putting the curly braces in the same line for constructors is OK if it only␣
↪initializes
// values in the initializer list
SpaceShip::SpaceShip(size_t crew) : crew(crew) { }

size_t SpaceShip::get_crew_size() const
{
    return crew;
}

SpaceShuttle::SpaceShuttle() : SpaceShip(7)
{
    // doing further initialization
}

Sojuz::Sojuz() : SpaceShip(3)
{
    // doing further initialization
}

template <typename T>
CargoShip<T>::CargoShip(const T &cargo) : cargo(cargo) { }

} // namespace spaceships
```

CMake Code Style

- Indent with four spaces.
- Maximum line length 120 characters. When splitting lines, try to focus on readability where possible (for example, by pairing up keyword/argument pairs on individual lines).
- Don't put anything in the optional parentheses after `endforeach()`, `endif()`, etc.
- Use lowercase (`with_underscores`) for command, function, and macro names.
- For locally scoped variables, use lowercase (`with_underscores`).
- For globally scoped variables, use uppercase (`WITH_UNDERSCORES`).
- Otherwise follow the defaults of the cmake-lint project.

Configuring the Code Style for a Project Using EditorConfig

EditorConfig helps developers define and maintain consistent coding styles between different editors and IDEs. The EditorConfig project consists of a file format for defining coding styles and a collection of text editor plugins that enable editors to read the file format and adhere to defined styles. EditorConfig files are easily readable and they work nicely with version control systems.

For more information, see EditorConfig Website.

Documenting Code

Please see the guide here: 编写代码文档.

Structure

To be written.

Language Features

To be written.

6.5.2 Install pre-commit Hook for ESP-IDF Project

Required Dependency

Python 3.6.1 or above. This is our recommendation python version for IDF developers.

If you still have versions not compatible, please do not install pre-commit hook and update your python versions.

Install pre-commit

Run `pip install pre-commit`

Install pre-commit hook

1. Go to the IDF Project Directory
2. Run `pre-commit install --allow-missing-config`. Install hook by this approach will let you commit successfully even in branches without the `.pre-commit-config.yaml`
3. pre-commit hook will run automatically when you're running `git commit` command

What's More?

For detailed usage, Please refer to the documentation of pre-commit.

Common Problems For Windows Users

1. `/usr/bin/env: python: Permission denied.`
   If you're in Git Bash or MSYS terminal, please check the python executable location by run `which python`. If the executable is under `~/AppData/Local/Microsoft/WindowsApps/`, then it's a link to Windows AppStore, not a real one.
   Please install python manually and update this in your `PATH` environment variable.

6.5.3 编写代码文档

本文简要介绍了 espressif/esp-idf 项目库采用的文件风格以及如何在项目库中添加新文件。

概述

在项目库内编写代码文档时，请遵循 Doxygen 代码注释风格。要采用这一风格，您可以将 `@param` 等特殊命令插入到标准注释块中，比如:

```
/**
 * @param ratio this is oxygen to air ratio
 */
```

Doxygen 会解析代码，提取命令和后续文本，生成代码文档。

注释块通常包含对功能的记述，如下所示。

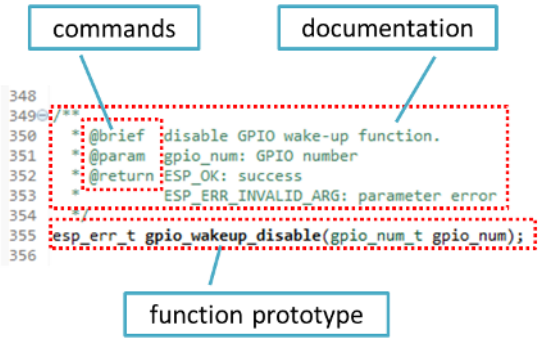

Doxygen 支持多种排版风格，对于文档中可以包含的细节非常灵活。请参考数据丰富、条理清晰的 Doxygen 手册 熟悉 Doxygen 特性。

为什么需要 Doxygen?

使用 Doxygen 的最终目的是确保所有代码编写风格一致，以便在代码变更时使用 Sphinx 和 Breathe 等工具协助筹备、自动更新 API 文档。

使用这类工具时，上文代码渲染后呈现效果如下:

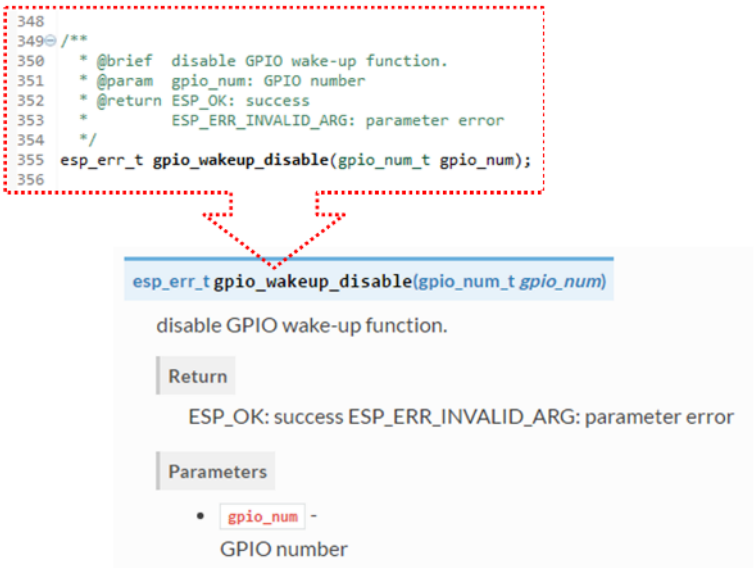

尝试一下！

在本项目库编写代码文档时，请遵守下列准则。

1. 写明代码的基本内容：函数、结构体、类型定义、枚举、宏等。请详细说明代码的用途、功能和限制，因为在阅读他人的文档时你也想看到这些信息。
2. 函数文档需简述该函数的功能，并解释输入参数和返回值的含义。
3. 请不要在参数或除空格外的其他字符前面添加数据类型。所有空格和换行符都会压缩为一个空格。如需换行，请执行换行操作两次。

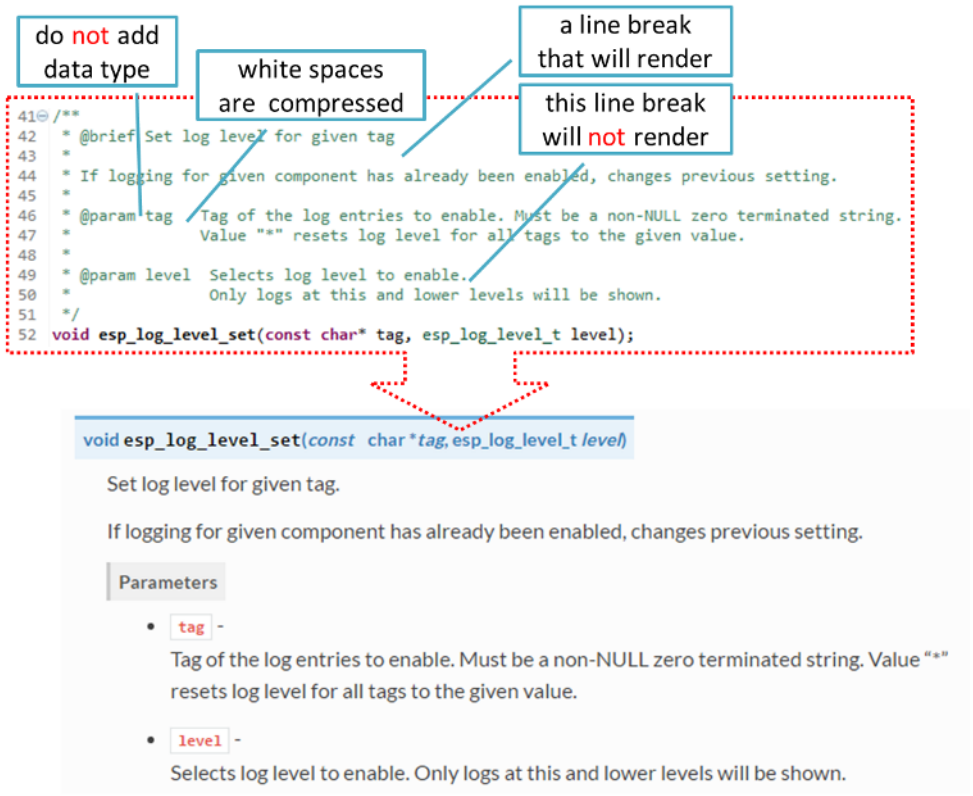

4. 如果函数没有输入参数或返回值，请跳过 `@param` 或 `@return`。

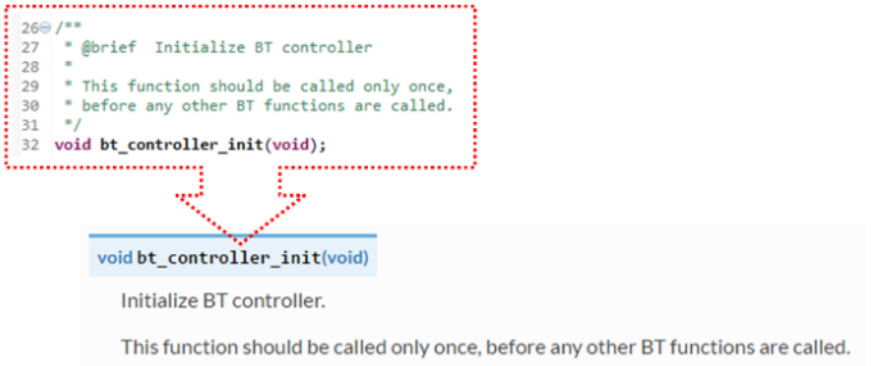

5. 为 `define`、`struct` 和 `enum` 的成员编写文档时，请在每一项后添加注释，如下所示。

6. 请在命令后换行（如下文中的 `@return`），呈现排版精美的列表。

```
*
* @return
*     - ESP_OK if erase operation was successful
*     - ESP_ERR_NVS_INVALID_HANDLE if handle has been closed or is NULL
*     - ESP_ERR_NVS_READ_ONLY if handle was opened as read only
*     - ESP_ERR_NVS_NOT_FOUND if the requested key doesn't exist
*     - other error codes from the underlying storage driver
*
```

7. 头文件的功能概览和库文件应当存在同一个项目库之下，放入单独的 `README.rst` 文件。如果目录下包含不同 API 的头文件，应将文件命名为 `apiname-readme.rst`。

进阶

以下小贴士可以帮助你进一步提高文档质量，增强可读性。

1. 添加代码片段举例说明。请在片段前后添加 `@code{c}` 和 `@endcode` 命令。

```
*
* @code{c}
* // Example of using nvs_get_i32:
* int32_t max_buffer_size = 4096; // default value
* esp_err_t err = nvs_get_i32(my_handle, "max_buffer_size", &max_buffer_size);
* assert(err == ESP_OK || err == ESP_ERR_NVS_NOT_FOUND);
* // if ESP_ERR_NVS_NOT_FOUND was returned, max_buffer_size will still
* // have its default value.
* @endcode
*
```

   代码片段应放入所介绍功能的注释块中。

2. 使用 `@attention` 或 `@note` 命令高亮显示重要信息。

```
*
* @attention
*     1. This API only impact WIFI_MODE_STA or WIFI_MODE_APSTA mode
*     2. If the ESP32 is connected to an AP, call esp_wifi_disconnect to␣
↪disconnect.
*
```

   上述例子介绍了如何使用编号列表。

3. 给相似的函数编写文档时，可在前后使用 `/**@{*/` 和 `/**@}*/` 标记命令。

```
/**@{*/
/**
 * @brief common description of similar functions
 *
 */
void  first_similar_function (void);
```

（下页继续）

(续上页)

```
void second_similar_function (void);
/**@}*/
```

示例请参照 nvs_flash/include/nvs.h。

4. 如果想跳过重复的宏定义、枚举项等代码，不添加描述，请在代码前后添加 `/** @cond */` 和 `/** @endcond */` 命令。示例请参照 driver/include/driver/gpio.h。
5. 使用 markdown 增强文档可读性，添加页眉、链接、表格及更多内容。

```
*
* [ESP32 技术参考手册](https://www.espressif.com/sites/default/files/
↪documentation/esp32_technical_reference_manual_cn.pdf)
*
```

注解： 代码片段、注释、链接等内容如没有附在所述对象对应的注释块中，将不会添加到文档中。

6. 准备一个或更多完整的代码示例和描述，将描述放入单独的 `README.md` 文件中，置于 examples 目录的特定文件夹中。

链接到示例

链接到 GitHub 上的示例时，请不要使用绝对 URLs 或硬编码 URLs。请使用 Docutils 自定义角色生成链接。自动生成的链接指向项目库中 git commit 编号（或标记）的 tree 或 blob。这种做法可以确保 master 分支上的文件移动或删除时，链接不会失效。Docutils 自定义角色将以透明的方式处理子模块中的文件，并使用正确的 commit ID 链接到子模块目录中。

有如下角色可以选择：

- `:idf:`path`` - 指向 ESP-IDF 内的目录
- `:idf_file:`path`` - 指向 ESP-IDF 内的文件
- `:idf_raw:`path`` - 指向 ESP-IDF 内的原始格式文件
- `:component:`path`` - 指向 ESP-IDF components 内的文件夹
- `:component_file:`path`` - 指向 ESP-IDF components 内的文件
- `:component_raw:`path`` - 指向 ESP-IDF components 内的原始格式文件
- `:example:`path`` - 指向 ESP-IDF examples 内的文件夹
- `:example_file:`path`` - 指向 ESP-IDF examples 内的文件
- `:example_raw:`path`` - 指向 inside ESP-IDF examples 内的原始格式文件

示例：

```
* :example:`get-started/hello_world`
* :example:`Hello World! <get-started/hello_world>`
```

渲染效果：

- get-started/hello_world
- Hello World!

CI build 脚本中添加了检查功能，查找 RST 文件中的硬编码链接（通过 URL 的 tree/master、blob/master 或 raw/master 部分识别）。该功能可通过 `cd docs` 和 `make gh-linkcheck` 命令手动运行。

链接到其他语言文档

要切换不同语言的文档，可使用 `:link_to_translation:` 自定义角色。文档页面中的角色提供其他语言版本的链接。下文的例子说明了如何在文档中添加中英文版本的链接：

```
:link_to_translation:`zh_CN: 中文版 `
:link_to_translation:`en:English`
```

语言用 en 或 zh_CN 等标准简写表示。最后一个分号后的文本非标准化内容，可根据链接的位置自行输入，如:

```
:link_to_translation:`en:see description in English`
```

添加图例

请考虑使用图表和图片解释表述的概念。

相比于长篇的表述，图例有时可以更好地描述复杂的理念、数据结构或算法。本项目库使用 blockdiag 工具包由简单的文本文件生成图表。

工具包支持下列图表类型:

- 框图
- 时序图
- 活动图
- 逻辑网络图

使用该工具包，可以将简单的文本（与 graphviz 的 DOT 格式类似）转换成美观的图片。图中内容自动排版。图标代码之后会转换为“.png”图片，在后台添加进 **Sphinx** 文档中。

要查看图表的渲染效果，可使用线上的 interactive shell 即时显示生成的图片。

下面是一些图表示例:

- 简单的 **框图** / `blockdiag` - Wi-Fi Buffer 配置
- 稍复杂的 **框图** - Wi-Fi 编程模型
- **时序图** / `seqdiag` - 在所有信道中扫描特定 AP
- **包图** / `packetdiag` - NVS 页面结构

尝试修改源代码，看看图表会发生什么变化。

注解: interactive shell 使用的字体和 esp-idf 文档使用的字体渲染后显示的效果略有不同。

添加注释

写文档时，您可能需要:

- 留下建议，说明之后哪些内容需要添加或修改。
- 提醒自己或其他人跟进。

这时，您可以使用 `.. todo::` 命令在 reST 文件中添加待做事项。如:

```
.. todo::

   Add a package diagram.
```

如果在 reST 文件中添加 `.. todolist::` 命令，整篇文档中的所有待做事项将会罗列成表。

默认情况下，文档生成器会忽视 `.. todo::` 和 `.. todolist::` 命令。如果您想在本地生成的文档中显示注释和注释列表，请执行下列步骤:

1. 打开本地的 `conf_common.py` 文件。
2. 找到 `todo_include_todos` 参数。
3. 将该参数的值由 `False` 改为 `True`。

将改动推送到远端分支之前，请把 `todo_include_todos` 的值重置为 `False`。

更多关于扩展的信息，请参阅 sphinx.ext.todo 的相关文档。

为不同芯片书写通用文档

乐鑫各芯片的文档是基于现有文档完成的。为提高文档写作效率，使所写文档可重复用于其它芯片（以下称“目标”）文档中，我们为您提供以下功能：

依据目标类型排除内容 有时会出现某一内容只适用于一个目标的情况。这种情况下，你可以使用 ‘‘.. only:: TAG’’ 指令将这部分内容设为某个目标的专属内容，’TAG’ 处替换为以下名称：

芯片名称：

- esp32
- esp32s2
- esp32c3

从‘sdkconfig.h’中定义标识符，标识符由目标的默认 menuconfig 设置生成，例如：

- CONFIG_FREERTOS_UNICORE

从 soc ‘*_caps’头文件中定义标识符，例如：

- SOC_BT_SUPPORTED
- SOC_CAN_SUPPORTED

示例：

```
.. only:: esp32

    ESP32 specific content.
```

该指令也支持布尔逻辑操作符‘and’、’or’和‘not’。示例：

```
.. only:: SOC_BT_SUPPORTED and CONFIG_FREERTOS_UNICORE

    BT specific content only relevant for single-core targets.
```

该功能由 Sphinx selective exclude 的扩展提供。

这个扩展有一个缺点，当你想要排除某个章节时，而这个章节后直接跟着一个加了标签的新章节，此时该功能无法成功操作。这种情况下，章节的标签将无法正确链接到下一节，但其它内容都可正确渲染。如遇这一情况，可暂时使用以下应急方法：

```
.. only:: esp32

    .. _section_1_label:

    Section 1
    ^^^^^^^^^

    Section one content

    .. _section_2_label:

.. only:: not esp32

    .. _section_2_label:

Section 2
^^^^^^^^^
Section 2 content
```

‘:TAG:’角色的作用为从树形目录中排除特定内容。例如：

```
.. toctree::
    :maxdepth: 1

    :esp32: configure-wrover
    configure-other-jtag
```

生成文档时，Sphinx 会使用上述提到的指令和角色，根据其被调用的目标标签来添加或排除某些内容。

注解： 如希望根据目标的标签从 toctree 中排除一整个文档，则需同时更新 docs/conf_common.py 中的 `exclude_patterns` 列表，为其它目标排除该文档。否则，Sphinx 将发出一条错误警报：WARNING: document isn't included in any toctree。

对此推荐的解决方案是：将这个文档添加到 docs/conf_common.py `conditional_include_dict` 中的一个列表里，例如，一个仅供支持蓝牙的目标可见的文档应被添加至 `BT_DOCS`。此后，如果该文档未设置对应的标签，则 docs/idf_extensions/exclude_docs.py 会将其添加至 `exclude_patterns`。

如果你需要从一个列表或项目符号条目中排除某一内容，应通过在 " .. list:: " 指令中使用 " :TAG:'' 角色来完成。

```
.. list::

    :esp32: - ESP32 specific content
    :SOC_BT_SUPPORTED: - BT specific content
    - Common bullet point
    - Also common bullet point
```

替代宏 如果你需要指向根据目标类型定义的芯片名称、工具链名称、路径名称或其它通用名称，可以选择使用 docs/idf_extensions/format_idf_target.py 提供的替代宏。

例如，以下 reStructuredText 内容：

> This is a {IDF_TARGET_NAME}, with /{IDF_TARGET_PATH_NAME}/soc.c, compiled with *{IDF_TARGET_TOOLCHAIN_PREFIX}-gcc* with *CONFIG_{IDF_TARGET_CFG_PREFIX}_MULTI_DOC*

将在文档中渲染为：

> This is a ESP32, with /esp32/soc.c, compiled with *xtensa-esp32-elf-gcc* with *CONFIG_ESP32_MULTI_DOC*.

这一扩展也支持定义本地（在单个源文件中）替代名称的标记。请在 RST 文件的一行中插入以下定义语言：

> {IDF_TARGET_SUFFIX:default=" DEFAULT_VALUE" , esp32=" ESP32_VALUE" , esp32s2=" ESP32S2_VALUE" , esp32c3=" ESP32C3_VALUE" }

这样将在当前的 RST 文件中根据目标类型为 {IDF_TARGET_SUFFIX} 标签定义一个替代名称。例如：

> {IDF_TARGET_TX_PIN:default=" IO3" , esp32=" IO4" , esp32s2=" IO5" , esp32c3=" IO6" }

上例将为 {IDF_TARGET_TX_PIN} 标签定义一个替代名称，当使用 esp32s2 标签调用 sphinx 时，{IDF_TARGET_TX_PIN} 将被替代为 "IO5"。

注解： 这样的单个文档定义指令可置于.rst 文档中的任意位置（单独一行），指令名须以 `IDF_TARGET_` 为开头。

汇总文档

文档准备好后，请参照*API Documentation Template* 的要求创建一个文件，汇总所有准备好的文档。最后，在文件中添加链接指向 `/docs` 文件夹或子文件夹下 `index.rst` 文件的 `.. toctree::`。

Sphinx 新手怎么办

1. 不要担心。所有需要的软件均有详细文档，并且开源、免费。您可以先查看 Sphinx 文档。如果您不清楚如何用 rst markup 语言写作，请查看 reStructuredText Primer。您也可以使用 markdown (.md) 文件，查找更多在 Recommonmark parser' 文档页面 使用的特定 markdown 句法信息。
2. 查看本文档的源文件，了解本文档使用的代码。源文件存储于 GitHub espressif/esp-idf 项目库的 docs 文件夹下。您可以滑动到页面上方，点击右上角的链接，直接查看本页面的源文件。您也可以通过点击 `Raw` 按键打开源文件，在 GitHub 上查看文件的代码。
3. 想要查看在上传至 GitHub 前文档如何生成、呈现，有两种方式：
   - 安装 'Sphinx'_、Breathe、Blockdiag 和 Doxygen 本地生成文档，具体可查看下文。
   - 在 Read the Docs 建立账号，在云端生成文档。Read the Docs 免费提供文档生成和存储，且速度快、质量高。
4. 在生成文档前预览，可使用 Sublime Text 编辑器和 OmniMarkupPreviewer 插件。

搭建环境本地生成文档

安装依赖项 您可以安装下列包，通过搭建环境在电脑上本地生成文档：

1. Doxygen - http://doxygen.nl/
2. Sphinx - https://github.com/sphinx-doc/sphinx/#readme-for-sphinx
3. Breathe - https://github.com/michaeljones/breathe#breathe
4. "sphinx_idf_theme" 文档主题 - https://github.com/espressif/sphinx_idf_theme
5. "sphinx-notfound-page" 自定义 404 页面 - https://github.com/readthedocs/sphinx-notfound-page
6. Blockdiag - http://blockdiag.com/en/index.html
7. Recommonmark - https://github.com/rtfd/recommonmark

添加 "sphinx_idf_theme" 包之后，文档将与 ESP-IDF 编程指南 的风格保持一致。

不用担心需要安装太多包。除 Doxygen 之外，其他包均使用纯 Python 语言，可一键安装。

重要： 目前仅支持 Python 3 版本生成文档，无法使用 Python 2。

Doxygen Doxygen 的安装取决于操作系统：

Linux

```
sudo apt-get install doxygen
```

Windows - 在 MSYS2 控制台中安装

```
pacman -S doxygen
```

MacOS

```
brew install doxygen
```

注解： 如果您是在 Windows MSYS2 系统上安装（Linux 和 MacOS 用户可以跳过此说明，不使用 MSYS2 的 Windows 用户需找到其它可替代系统），在安装 **之前**，请完成以下两步。这是安装添加图例 提到的 "blockdiag" 依赖项的必须步骤。

1. 更新所有系统包：

```
$ pacman -Syu
```

该过程可能需要重启 MSYS2 MINGW32 控制台并重复上述命令，直至更新完成。

2. 安装 *blockdiag* 的依赖项之一 *pillow*：

```
$ pacman -S mingw32/mingw-w64-i686-python-pillow
```

查看屏幕上的记录，确定 `mingw-w64-i686-python-pillow-4.3.0-1` 或更新的版本已安装。旧版本 *pillow* 无法运行。

Windows 安装 Doxygen 的缺点是 blockdiag pictures 字体不能正确加载，可能会存在乱码。在此问题解决之前，您可以使用 interactive shell 查看完整图片。

其它应用 其他所有应用都是 Python 包，可以按照下列步骤一键安装：

```
cd ~/esp/esp-idf/docs
pip install --user -r requirements.txt
```

注解： 安装步骤设定将 ESP-IDF 放在 `~/esp/esp-idf` 目录下，这是文档中使用的 ESP-IDF 默认地址。

生成文档

```
cd ~/esp/esp-idf/docs
```

现在可以调用如下命令生成文档:

```
./build_docs.py build
```

运行该命令后，系统将为 ESP-IDF 中所有可支持的语言和目标生成文档。这一过程将需要一些时间，但各文档会并行进行，速度取决于系统中 CPU 内核的个数（可通过 `--sphinx-parallel-builds` 选项修改该进程，详情可见 `./build_docs.py --help`）。

如需生成某一目标 (esp32) 某一语种 (en) 的全部文档，即 `en` 文件夹下所有文档，运行:

```
./build_docs.py -l en -t esp32 build
```

其中，语言 (`-l`) 可选择 `en` 和 `zh_CN`；目标 (`-t`) 可选择 ESP-IDF 中任意可支持的构建目标（如 `esp32` 和 `esp32s2`）。

生成后的文档将位于 `_build/<language>/<target>/html` 文件夹中。如需查阅，请在网页浏览器中打开该目录里的 `index.html`。

生成文档子集 编译某一语言的所有文档可能速度较慢，因此，也可以选择只生成所需的某个文档或部分所选文档。

在指令中列出你需要生成的文档名称即可:

```
./build_docs.py -l en -t esp32 -i api-reference/peripherals/can.rst build
```

也可以同时生成多个文档:

```
./build_docs.py -l en -t esp32 -i api-reference/peripherals/can.rst api-reference/
↪peripherals/adc.rst build
```

还可以使用通配符，选择生成所有符合条件的文档:

```
./build_docs.py -l en -t esp32 -i api-reference/peripherals/* build
```

请注意，这一功能仅用于文档写作过程中的检查和测试。其生成的 HTML 页面并非渲染完成后的格式，比如，运行这一指令并不会生成一个列有所有文档的索引，而且如果其中涉及到任何还未生成的文档参考都将导致错误警报出现。

生成 PDF 可以使用 `build_docs.py` 生成文档的 latex 和 PDF 格式，需安装以下 latex 工具包：

- latexmk
- texlive-latex-recommended
- texlive-fonts-recommended
- texlive-xetex

同时，也需要安装以下字体：

- Freefont Serif、Sans 和 Mono OpenType fonts，类似于 Ubuntu 上的 `fonts-freefont-otf` 包
- Lmodern，类似于 Ubuntu 上的 `fonts-lmodern` 包
- Fandol，可从 这里 下载

现在，可通过以下指令生成文档的 PDF 格式:

```
./build_docs.py -bs latex -l en -t esp32 build
```

或者，也可以同时生成 html 和 PDF 格式:

```
./build_docs.py -bs html latex -l en -t esp32 build
```

Latex 和 PDF 文件将位于 `_build/<language>/<target>/latex` 文件夹中。

大功告成

我们喜欢可以做酷炫事情的好代码。但我们更喜欢有清晰文档的好代码，可以让读者快速上手，做酷炫的事情。

尝试一下，贡献你的代码和文档!

相关文档

- *API Documentation Template*
- 文档的附加工具和扩展功能指南

6.5.4 文档的附加工具和扩展功能指南

ESP-IDF 文档由 Sphinx 应用程序生成，使用 Sphinx 对 docs 目录中的 reStructuredText (`.rst`) 格式文档进行渲染。关于渲染过程的详细信息，请参阅编写代码文档。

除 Sphinx 外，我们也使用了其它几种可为用户提供格式精美、便于查找的文档的应用程序。搭建环境本地生成文档 中列出了这些应用程序，docs/requirements.txt 中列出了其相应的版本号。

ESP-IDF 中包含多种芯片的双语文档（英文，简体中文）。如运行 Sphinx，不需直接使用 `sphinx`，可运行 Python 程序包 `build_docs.py`。

在此基础上，我们也开发了一些自定义的附加工具和扩展功能，旨在帮助整合 ESP-IDF 目录下的各个文档以及更好地查找和维护文档内容。

本章节主要帮您快速了解这些附加工具和扩展功能。

文件夹结构

- ESP-IDF 根目录下包含一个专门放置文档的文件夹 docs。
- docs 目录下的 docs/en （英文）和 docs/zh_CN （简体中文）子文件夹中包含本地化文档。
- 图像文件和本地化文档通用的字体包位于 docs/_static 子文件夹中。
- docs 根目录下以及 docs/en 和 docs/zh_CN 中的其它文件则提供了自动生成文档过程中所使用的配置和脚本，其中就包括本章节提到的附加工具和扩展功能。
- extensions 和 idf_extensions 两目录中提供了 Sphinx 的扩展功能。·
- 使用 build_docs.py，docs 文件夹中将自动创建一个 _build 目录。这个目录不会被添加到 ESP-IDF 项目库中。

附加工具和扩展功能指南

配置文件

docs/conf_common.py 该文件中包含每个本地化文档（包括英文文档、中文文档）所通用的配置信息。在文档每一次的构建过程中，该文件中的内容都将被导入至相应语言文件夹（包括，docs/en、docs/zh_CN）下的标准 Sphinx 配置文件 conf.py 中。

docs/sphinx-known-warnings.txt Sphinx 中存在一些伪错误警报，这些警报只能通过更新 Sphinx 源代码本身来解决。针对这一情况，我们将这些伪错误警报列在了 sphinx-known-warnings.txt 文件中，每一次生成文档时系统都将检测该文件并忽略这些伪错误警报。

脚本

docs/build_docs.py 最高级可执行程序，负责运行 Sphinx 为单个或多个语言/目标生成文档。运行 build_docs.py --help 可查阅所有命令选项。
当使用 build_docs.py 运行 Sphinx 时，系统将为 idf_target 配置变量，并设置一个与该配置变量相同名称的 Sphinx 标签，然后使用一些环境变量将路径发送至*IDF 专属扩展*。

docs/check_lang_folder_sync.sh 同时更新双语文档时，语言文件夹 docs/en 和 docs/zh_CN 下的文档结构和文件名应保持一致，以减少两文档间的不一致。每一次生成文档时都将运行 check_lang_folder_sync.sh 脚本，检测是否出现上述不一致的情况。

注解： 若一个新的章节为英语版本，且暂时还没有中文翻译，那么 zh_CN 文件夹中相应的中文文件内应写入 .. include:: 指令，路径指向英文源文件。这样，中文读者将也可以看到英文版源文件。例如，如果 docs/zh_CN/contribute/documenting-code.rst 这一文件还没有中文翻译，则该文件中应写入 .. include:: ../../en/contribute/documenting-code.rst。

非文档脚本 以下脚本除了生成文档之外，也可以用于其它用途：

tools/gen_esp_err_to_name.py 该脚本将检测整个 ESP-IDF 库，在源代码头文件中查找是否有错误代码和信息，然后在*Error Codes Reference* 内生成一个 .inc 文件记录这些信息。

tools/kconfig_new/confgen.py ESP-IDF components 的配置选项包含在每个部件目录下的 Kconfig 文件中，如 components/bt/Kconfig。该脚本将检测所有 component 目录并记录检测到的配置选项，然后在*Configuration Options Reference* 内生成一个 .inc 文件记录这些信息。

泛型扩展 以下是专为 IDF 开发的 Sphinx 扩展，这些扩展不依赖于任何特定的 IDF 文档操作或配置：

docs/extensions/toctree_filter.py Sphinx 扩展功能，优先于 :toctree: 指令，允许系统根据是否有标签（如 :tagname: toctree_entry）来过滤条目。完整描述请参考 Python 文件。

docs/extensions/list_filter.py Sphinx 扩展功能，提供一个 .. list:: 指令，允许系统根据是否有标签（如 :tagname: - list content）来过滤条目列表。完整描述请参考 Python 文件。

docs/extensions/html_redirects.py 在文档的维护过程中，一些源文件可能会转移位置或被重命名。这个 Sphinx 扩展功能便添加了一个重新导向机制，通过在 Sphinx 输出中生成静态 HTML 重新导向页面来为 URL 地址已改变的文档重新导向。该脚本与重新导向列表 html_redirect_pages 一起使用。conf_common.py 将负责从 docs/page_redirects.txt 中生成这个重新导向列表。

第三方扩展

- `sphinxcontrib` 为 blockdiag、seqdiag、actdiag、nwdiag、rackdiag & packetdiag 等图表的扩展
- Sphinx selective exclude 为 `eager_only` 的扩展

IDF 专属扩展

构建系统集成 docs/idf_extensions/build_system/

Python 包实现了一个 Sphinx 扩展功能，即将 IDF 构建系统信息拉入文档构建中

- 创建一个 CMake IDF 项目模型，并运行 CMake 生成元数据。
- 注册一些新的配置变量并发出一个 Sphinx 新事件，这些信息都用于其它扩展功能中。

配置变量

- `docs_root` - $IDF_PATH/docs 目录的绝对路径
- `idf_path` - IDF_PATH 变量的值，未设置环境时为 IDF_PATH 的绝对路径
- `build_dir` - 运行 `build_docs.py` 时自动创建的文档生成目录，默认为 `_build/<lang>/<target>`
- `idf_target` - IDF_TARGET 的值。`build_docs.py` 应负责在 Sphinx 命令行中设置该值。

新事件 CMake 项目模型运行完成后，系统将在构建初期发出 `idf-info` 事件。

参数为 `(app, project_description)`，其中 `project_description` 是一个字典，其中包含从 CMake 构建目录中的 `project_description.json` 内解析出的值。

其它 IDF 专属的扩展功能均订阅该事件，并使用该事件根据系统构建信息来设置一些文档参数。

其它扩展

docs/idf_extensions/include_build_file.py `include-build-file` 指令相当于是内置的 `include-file` 指令，只是文件路径是相对于 `build_dir` 来评估的。

docs/idf_extensions/kconfig_reference.py 订阅 `idf-info` 事件，并使用 confgen 从默认构建项目所使用的部件中生成 `kconfig.inc` 文件。之后，这个文件将被存储至*Project Configuration* 中。

docs/idf_extensions/link_roles.py 一个自定义的 Sphinx 角色 的实现功能，帮助从文档链接到 ESP-IDF 项目中具体的文件和文件夹处。有关具体实现了哪些角色，请参阅链接到示例 和链接到其他语言文档。

docs/idf_extensions/esp_err_definitions.py 小扩展包，调用 `gen_esp_err_to_name.py` 并更新修改后的.rst 文件。

docs/idf_extensions/gen_toolchain_links.py 文档内许多地方提供了下载工具链的链接。为了整合这些链接，减少需要分别手动更新这些链接的时间，该脚本会根据 tools/toolchain_versions.mk 内的信息生成工具链下载链接和工具链解压代码片段。

docs/idf_extensions/gen_version_specific_includes.py 也是一个自动生成 reStructuredText 文本 `.inc` 的扩展功能，其中内容是基于当前 ESP-IDF 版本所写。

docs/idf_extensions/util.py 提供一系列实用功能，主要提高本地化生成文档（请参见搭建环境本地生成文档）的效率，节省后续再次生成文本所需时间。

docs/idf_extensions/format_idf_target.py 通过将 idf_target 发送至 Sphinx 命令行替换 target 相关名称的扩展功能。例如：

> This is a {IDF_TARGET_NAME}, with /{IDF_TARGET_PATH_NAME}/soc.c, compiled with *{IDF_TARGET_TOOLCHAIN_PREFIX}-gcc* with *CONFIG_{IDF_TARGET_CFG_PREFIX}_MULTI_DOC*

删掉退格键后，将被渲染为

> This is a ESP32, with /esp32/soc.c, compiled with *xtensa-esp32-elf-gcc* with *CONFIG_ESP32_MULTI_DOC*.

同时，也支持使用以下语法标记本地（单个 rst 文件）替代文件的定义：{IDF_TARGET_TX_PIN:default=" IO3" ,esp32=" IO4" ,esp32s2=" IO5" }
这样将在当前的 rst 文件中定义标签 {IDF_TARGET_TX_PIN} 的替换名称。

为了使用相同的格式规则规范文档内容，该扩展功能优先于默认的 `.. include::` 指令。
在依赖于字符排列方式的格式内无法使用这一替换方式，例如，表格内。

docs/idf_extensions/latex_builder.py 一个在 latex 生成器内添加 ESP-IDF 专属功能的扩展，优先于默认的 Sphinx latex 生成器。
在输出目录内创建并添加 espidf.sty latex 包，其中包含一些运行时所需变量的宏包，如 IDF-Target。

docs/idf_extensions/gen_defines.py Sphinx 扩展，将 IDF 中的定义整合入 Sphinx 构建过程中，在 IDF 项目模型创建完成后开始运行。
解析这些定义值，并将其添加为 Sphinx 标签。
发出新的‘idf-defines-generated’事件，其中有一个包含所有原始定义值的字典，其它扩展功能可以使用这些原始值生成相关数据。

docs/idf_extensions/exclude_docs.py Sphinx 扩展，根据 conditional_include_dict {tag:documents} 标签更新已被排除的文档。如果文档设置有这个标签，则其将被添加至文档列表内。
同时也负责在使用 config 值 `docs_to_build` 生成文档时，排除不相关文档。此时，未在 `docs_to_build` 列表内的文档都将被排除。
订阅 `idf-defines-generated` 事件，因为该扩展功能需要根据 Sphinx 标签来决定需排除哪些文档。

docs/idf_extensions/run_doxygen.py 订阅 `idf-defines-generated` 事件，运行 Doxygen (docs/doxygen/Doxyfile_common) 生成描述密钥头文件的 XML 文件，然后运行 Breathe 将这些文件转换为可直接被添加至 API 参考页面的 `.inc` 文件。
将一些特定目标的自定义环境变量推入 Doxygen 中，包括项目的默认 `sdkconfig.h` 文件内定义的所有宏包以及 `soc` 部件 `xxx_caps.h` 的头文件中定义的所有宏包。这意味着，公共 API 头文件可以依赖于特定目标的配置选项或者 `soc` 功能头文件选项，如头文件中 `#ifdef` & `#if` 预处理器选项。
也就是说，我们可以根据生成文档的目标来生成不同的 Doxygen 文件。
有关这一流程的更多信息，请参考*编写代码文档* 和*API Documentation Template* 中的 **API 参考**章节。

相关文档

- *编写代码文档*

6.5.5 创建示例项目

每个 ESP-IDF 的示例都是一个完整的项目，其他人可以将示例复制至本地，并根据实际情况进行一定修改。请注意，示例项目主要是为了展示 ESP-IDF 的功能。

示例项目结构

- `main` 目录需要包含一个名为 `(something)_example_main.c` 的源文件，里面包含示例项目的主要功能。
- 如果该示例项目的子任务比较多，请根据逻辑将其拆分为 `main` 目录下的多个 C 或者 C++ 源文件，并将对应的头文件也放在同一目录下。
- 如果该示例项目具有多种功能，可以考虑在项目中增加一个 `components` 子目录，通过库功能，将示例项目的不同功能划分为不同的组件。注意，如果该组件提供的功能相对完整，且具有一定的通用性，则应该将它们添加到 ESP-IDF 的 `components` 目录中，使其成为 ESP-IDF 的一部分。
- 示例项目需要包含一个 `README.md` 文件，建议使用 示例项目 README 模板 ，并根据项目实际情况进行修改。
- 示例项目需要包含一个 `example_test.py` 文件，用于进行自动化测试。如果在 GitHub 上初次提交 Pull Request 时，可以先不包含这个脚本文件。具体细节，请见有关 Pull Request 的相关内容。

一般准则

示例代码需要遵循《乐鑫物联网开发框架风格指南》。

检查清单

提交一个新的示例项目之前，需要检查以下内容：

- 示例项目的名字（包括 `Makefile` 和 `README.md` 中）应使用 `example`，而不要写 “demo”，“test” 等词汇。
- 每个示例项目只能有一个主要功能。如果某个示例项目有多个主要功能，请将其拆分为两个或更多示例项目。
- 每个示例项目应包含一个 `README.md` 文件，建议使用 示例项目 README 模板 。
- 示例项目中的函数和变量的命令要遵循命 名规范 中的要求。对于仅在示例项目源文件中使用的非静态变量/函数，请使用 `example` 或其他类似的前缀。
- 示例项目中的所有代码结构良好，关键代码要有详细注释。
- 示例项目中所有不必要的代码（旧的调试日志，注释掉的代码等）都必须清除掉。
- 示例项目中使用的选项（比如网络名称，地址等）不得直接硬编码，应尽可能地使用配置项，或者定义为宏或常量。
- 配置项可见 `KConfig.projbuild` 文件，该文件中包含一个名为 “Example Configuration” 的菜单。具体情况，请查看现有示例项目。
- 所有的源代码都需要在文件开头指定许可信息（表示该代码是 `in the public domain CC0`）和免责声明。或者，源代码也可以应用 `Apache License 2.0` 许可条款。请查看现有示例项目的许可信息和免责声明，并根据实际情况进行修改。
- 任何第三方代码（无论是直接使用，还是进行了一些改进）均应保留原始代码中的许可信息，且这些代码的许可必须兼容 `Apache License 2.0` 协议。

6.5.6 API Documentation Template

注解： *INSTRUCTIONS*

1. Use this file (docs/en/api-reference/template.rst) as a template to document API.
2. Change the file name to the name of the header file that represents documented API.
3. Include respective files with descriptions from the API folder using `..include::`
   - README.rst
   - example.rst
   - ...
4. Optionally provide description right in this file.
5. Once done, remove all instructions like this one and any superfluous headers.

Overview

注解： *INSTRUCTIONS*

1. Provide overview where and how this API may be used.
2. Where applicable include code snippets to illustrate functionality of particular functions.
3. To distinguish between sections, use the following heading levels:
   - # with overline, for parts
   - * with overline, for chapters
   - =, for sections
   - -, for subsections
   - ^, for subsubsections
   - ", for paragraphs

Application Example

注解： *INSTRUCTIONS*

1. Prepare one or more practical examples to demonstrate functionality of this API.
2. Each example should follow pattern of projects located in `esp-idf/examples/` folder.
3. Place example in this folder complete with `README.md` file.
4. Provide overview of demonstrated functionality in `README.md`.
5. With good overview reader should be able to understand what example does without opening the source code.
6. Depending on complexity of example, break down description of code into parts and provide overview of functionality of each part.
7. Include flow diagram and screenshots of application output if applicable.
8. Finally add in this section synopsis of each example together with link to respective folder in `esp-idf/examples/`.

API Reference

注解： *INSTRUCTIONS*

1. This repository provides for automatic update of API reference documentation using *code markup retrieved by Doxygen from header files*.

1. Update is done on each documentation build by invoking Sphinx extension docs/idf_extensions/run_doxygen.py for all header files listed in the `INPUT` statement of docs/doxygen/Doxyfile_common.

1. Each line of the `INPUT` statement (other than a comment that begins with `##`) contains a path to header file `*.h` that will be used to generate corresponding `*.inc` files:

```
##
## Wi-Fi - API Reference
##
../components/esp32/include/esp_wifi.h \
../components/esp32/include/esp_smartconfig.h \
```

1. When the headers are expanded, any macros defined by default in `sdkconfig.h` as well as any macros defined in SOC-specific `include/soc/*_caps.h` headers will be expanded. This allows the headers to include/exclude material based on the `IDF_TARGET` value.

1. The `*.inc` files contain formatted reference of API members generated automatically on each documentation build. All `*.inc` files are placed in Sphinx `_build` directory. To see directives generated for e.g. `esp_wifi.h`, run `python gen-dxd.py esp32/include/esp_wifi.h`.

1. To show contents of `*.inc` file in documentation, include it as follows:

```
.. include-build-file:: inc/esp_wifi.inc
```

   For example see docs/en/api-reference/network/esp_wifi.rst

1. Optionally, rather that using `*.inc` files, you may want to describe API in you own way. See docs/en/api-guides/ulp.rst for example.
   Below is the list of common `.. doxygen...::` directives:
   - Functions - `.. doxygenfunction:: name_of_function`
   - Unions - `.. doxygenunion:: name_of_union`
   - Structures - `.. doxygenstruct:: name_of_structure` together with `:members:`
   - Macros - `.. doxygendefine:: name_of_define`
   - Type Definitions - `.. doxygentypedef:: name_of_type`
   - Enumerations - `.. doxygenenum:: name_of_enumeration`

See Breathe documentation for additional information.
To provide a link to header file, use the *link custom role* as follows:

```
* :component_file:`path_to/header_file.h`
```

1. In any case, to generate API reference, the file docs/doxygen/Doxyfile_common should be updated with paths to `*.h` headers that are being documented.

1. When changes are committed and documentation is build, check how this section has been rendered. *Correct annotations* in respective header files, if required.

6.5.7 Contributor Agreement

Individual Contributor Non-Exclusive License Agreement including the Traditional Patent License OPTION

Thank you for your interest in contributing to this Espressif project hosted on GitHub ("We" or "Us").

The purpose of this contributor agreement ("Agreement") is to clarify and document the rights granted by contributors to Us. To make this document effective, please follow the instructions in the *Contributions Guide*.

1. DEFINITIONS **"You"** means the Individual Copyright owner who submits a Contribution to Us. If You are an employee and submit the Contribution as part of your employment, You have had Your employer approve this Agreement or sign the Entity version of this document.

"Contribution" means any original work of authorship (software and/or documentation) including any modifications or additions to an existing work, Submitted by You to Us, in which You own the Copyright. If You do not own the Copyright in the entire work of authorship, please contact Us by submitting a comment on GitHub.

"Copyright" means all rights protecting works of authorship owned or controlled by You, including copyright, moral and neighboring rights, as appropriate, for the full term of their existence including any extensions by You.

"Material" means the software or documentation made available by Us to third parties. When this Agreement covers more than one software project, the Material means the software or documentation to which the Contribution was Submitted. After You Submit the Contribution, it may be included in the Material.

"Submit" means any form of physical, electronic, or written communication sent to Us, including but not limited to electronic mailing lists, source code control systems, and issue tracking systems that are managed by, or on behalf of, Us, but excluding communication that is conspicuously marked or otherwise designated in writing by You as "Not a Contribution."

"Submission Date" means the date You Submit a Contribution to Us.

"Documentation" means any non-software portion of a Contribution.

2. LICENSE GRANT 2.1 Copyright License to Us

Subject to the terms and conditions of this Agreement, You hereby grant to Us a worldwide, royalty-free, NON-exclusive, perpetual and irrevocable license, with the right to transfer an unlimited number of non-exclusive licenses or to grant sublicenses to third parties, under the Copyright covering the Contribution to use the Contribution by all means, including, but not limited to:

- to publish the Contribution,
- to modify the Contribution, to prepare derivative works based upon or containing the Contribution and to combine the Contribution with other software code,
- to reproduce the Contribution in original or modified form,
- to distribute, to make the Contribution available to the public, display and publicly perform the Contribution in original or modified form.

2.2 Moral Rights remain unaffected to the extent they are recognized and not waivable by applicable law. Notwithstanding, You may add your name in the header of the source code files of Your Contribution and We will respect this attribution when using Your Contribution.

3. PATENTS 3.1 Patent License

Subject to the terms and conditions of this Agreement You hereby grant to us a worldwide, royalty-free, non-exclusive, perpetual and irrevocable (except as stated in Section 3.2) patent license, with the right to transfer an unlimited number of non-exclusive licenses or to grant sublicenses to third parties, to make, have made, use, sell, offer for sale, import and otherwise transfer the Contribution and the Contribution in combination with the Material (and portions of such combination). This license applies to all patents owned or controlled by You, whether already acquired or hereafter acquired, that would be infringed by making, having made, using, selling, offering for sale, importing or otherwise transferring of Your Contribution(s) alone or by combination of Your Contribution(s) with the Material.

3.2 Revocation of Patent License

You reserve the right to revoke the patent license stated in section 3.1 if we make any infringement claim that is targeted at your Contribution and not asserted for a Defensive Purpose. An assertion of claims of the Patents shall be considered for a "Defensive Purpose" if the claims are asserted against an entity that has filed, maintained, threatened, or voluntarily participated in a patent infringement lawsuit against Us or any of Our licensees.

4. DISCLAIMER THE CONTRIBUTION IS PROVIDED "AS IS". MORE PARTICULARLY, ALL EXPRESS OR IMPLIED WARRANTIES INCLUDING, WITHOUT LIMITATION, ANY IMPLIED WARRANTY OF MERCHANTABILITY, FITNESS FOR A PARTICULAR PURPOSE AND NON-INFRINGEMENT ARE EXPRESSLY DISCLAIMED BY YOU TO US AND BY US TO YOU. TO THE EXTENT THAT ANY SUCH WARRANTIES CANNOT BE DISCLAIMED, SUCH WARRANTY IS LIMITED IN DURATION TO THE MINIMUM PERIOD PERMITTED BY LAW.

5. Consequential Damage Waiver TO THE MAXIMUM EXTENT PERMITTED BY APPLICABLE LAW, IN NO EVENT WILL YOU OR US BE LIABLE FOR ANY LOSS OF PROFITS, LOSS OF ANTICIPATED SAVINGS, LOSS OF DATA, INDIRECT, SPECIAL, INCIDENTAL, CONSEQUENTIAL AND EXEMPLARY DAMAGES ARISING OUT OF THIS AGREEMENT REGARDLESS OF THE LEGAL OR EQUITABLE THEORY (CONTRACT, TORT OR OTHERWISE) UPON WHICH THE CLAIM IS BASED.

6. Approximation of Disclaimer and Damage Waiver IF THE DISCLAIMER AND DAMAGE WAIVER MENTIONED IN SECTION 4 AND SECTION 5 CANNOT BE GIVEN LEGAL EFFECT UNDER APPLICABLE LOCAL LAW, REVIEWING COURTS SHALL APPLY LOCAL LAW THAT MOST CLOSELY APPROXIMATES AN ABSOLUTE WAIVER OF ALL CIVIL LIABILITY IN CONNECTION WITH THE CONTRIBUTION.

7. Term 7.1 This Agreement shall come into effect upon Your acceptance of the terms and conditions.

7.2 In the event of a termination of this Agreement Sections 4, 5, 6, 7 and 8 shall survive such termination and shall remain in full force thereafter. For the avoidance of doubt, Contributions that are already licensed under a free and open source license at the date of the termination shall remain in full force after the termination of this Agreement.

8. Miscellaneous 8.1 This Agreement and all disputes, claims, actions, suits or other proceedings arising out of this agreement or relating in any way to it shall be governed by the laws of People's Republic of China excluding its private international law provisions.

8.2 This Agreement sets out the entire agreement between You and Us for Your Contributions to Us and overrides all other agreements or understandings.

8.3 If any provision of this Agreement is found void and unenforceable, such provision will be replaced to the extent possible with a provision that comes closest to the meaning of the original provision and that is enforceable. The terms and conditions set forth in this Agreement shall apply notwithstanding any failure of essential purpose of this Agreement or any limited remedy to the maximum extent possible under law.

8.4 You agree to notify Us of any facts or circumstances of which you become aware that would make this Agreement inaccurate in any respect.

You

Date:	
Name:	
Title:	
Address:	

Us

Date:	
Name:	
Title:	
Address:	

Chapter 7

ESP-IDF 版本简介

ESP-IDF 的 GitHub 仓库时常更新，特别是用于开发新特性的 master 分支。

如有量产需求，请使用稳定版本。

7.1 发布版本

您可以通过以下链接访问各个版本的配套文档：

- 最新稳定版 ESP-IDF：https://docs.espressif.com/projects/esp-idf/zh_CN/stable/
- 最新版 ESP-IDF（即 master 分支）：https://docs.espressif.com/projects/esp-idf/zh_CN/latest/

ESP-IDF 在 GitHub 平台上的完整发布历史请见 发布说明页面。您可以在该页面查看各个版本的发布说明、配套文档及相应获取方式。

7.2 我该选择哪个版本？

- 如有量产需求，请使用 最新稳定版本 。稳定版本已通过人工测试，后续更新仅修复 bug，主要特性不受影响（更多详情，请见 版本管理 ）。请访问 发布说明页面 界面查看每一个稳定发布版本。
- 如需尝试/测试 ESP-IDF 的最新特性，请使用 最新版本（在 master 分支上）。最新版本包含 ESP-IDF 的所有最新特性，已通过自动化测试，但尚未全部完成人工测试（因此存在一定风险）。
- 如需使用稳定版本中没有的新特性，但同时又不希望受到 master 分支更新的影响，您可以将一个最适合您的稳定版本 更新至一个预发布版本 或 更新至一个发布分支。

有关如何更新 ESP-IDF 本地副本的内容，请参考 更新 *ESP-IDF* 章节。

7.3 版本管理

ESP-IDF 采用了 语义版本管理方法，即您可以从字面含义理解每个版本的差异。其中

- 主要版本（例 `v3.0`）代表有重大更新，包括增加新特性、改变现有特性及移除已弃用的特性。
  升级至一个新的主要版本（例 `v2.1` 升级至 `v3.0`）意味着您可能需要更新您的工程代码，并重新测试您的工程，具体可参考 发布说明页面 的重大变更 (Breaking Change) 部分。
- 次要版本（例 `v3.1`）代表有新增特性和 bug 修复，但现有特性不受影响，公开 API 的使用也不受影响。
  升级至一个新的次要版本（例 `v3.0` 升级至 `v3.1`）意味着您可能不需要更新您的工程代码，但需重新测试您的工程，特别是 发布说明页面 中专门提到的部分。
- Bugfix 版本（例 `v3.0.1`）仅修复 bug，并不增加任何新特性。
  升级至一个新的 Bugfix 版本（例 `v3.0` 升级至 `v3.0.1`）意味着您不需要更新您的工程代码，仅需测试与本次发布修复 bug（列表见 发布说明页面）直接相关的特性。

7.4 支持期限

ESP-IDF 的每个主要版本和次要版本都有相应的支持期限。支持期限满后，版本停止更新维护，将不再提供支持。

支持期限政策 对此有具体描述，并介绍了每个版本的支持期限是如何界定的。

发布说明页面 界面上的每一个发布版本都提供了该版本的支持期限信息。

一般而言：

- 如您刚开始一个新项目，建议使用最新稳定版本。
- 如您有 GitHub 账号，请点击 发布说明页面 界面右上角的 “Watch” 按键，并选中 “Releases only” 选项。GitHub 将会在新版本发布的时候通知您。当您所使用的版本有 Bugfix 版本发布时，请做好升级至该 Bugfix 版本的规划。
- 如可能，请定期（如每年一次）将项目的 IDF 版本升级至一个新的主要版本或次要版本。对于次要版本更新，更新过程应该比较简单，但对于主要版本更新，可能需要细致查看发布说明并做对应的更新规划。
- 请确保您所使用的版本停止更新维护前，已做好升级至新版本的规划。

ESP-IDF 的每个主要版本和次要版本（V4.1、V4.2 等）的支持期限为 30 个月，从最初的稳定版发布日算起。

在支持期限内意味着 ESP-IDF 团队将继续在 GitHub 的发布分支上进行 bug 修复、安全修复等，并根据需要定期发布新的 Bugfix 版本。

支持期限分为 “服务期” 和 “维护期”：

周期	时长	是否推荐新工程使用
服务期	12 个月	是
维护期	18 个月	否

在服务期内，Bugfix 版本的发布更为频繁。某些情况下，在服务期内会增加新特性，这些特性主要是为了满足新产品特定监管要求或标准，并且回归风险非常低。

在维护期内，该版本仍受支持，但只会对严重性较高的问题或安全问题进行 bug 修复。

当开始一个新项目时，建议使用在服务期内的版本。

鼓励用户在您所用的版本支持期限结束之前，将所有的工程升级到最新的 ESP-IDF 版本。在版本支持期限满后，我们将不再继续进行 bug 修复。

支持期限不包括预发布版本（betas、预览版、*-rc* 和 *-dev* 版等），有时会将某个特性在发布版中标记为 “预览版”，这意味着该特性也不在支持期限内。

关于 不同版本的 ESP-IDF （主要版本、次要版本、Bugfix 版本等）的更多信息，请参考 ESP-IDF 编程指南。

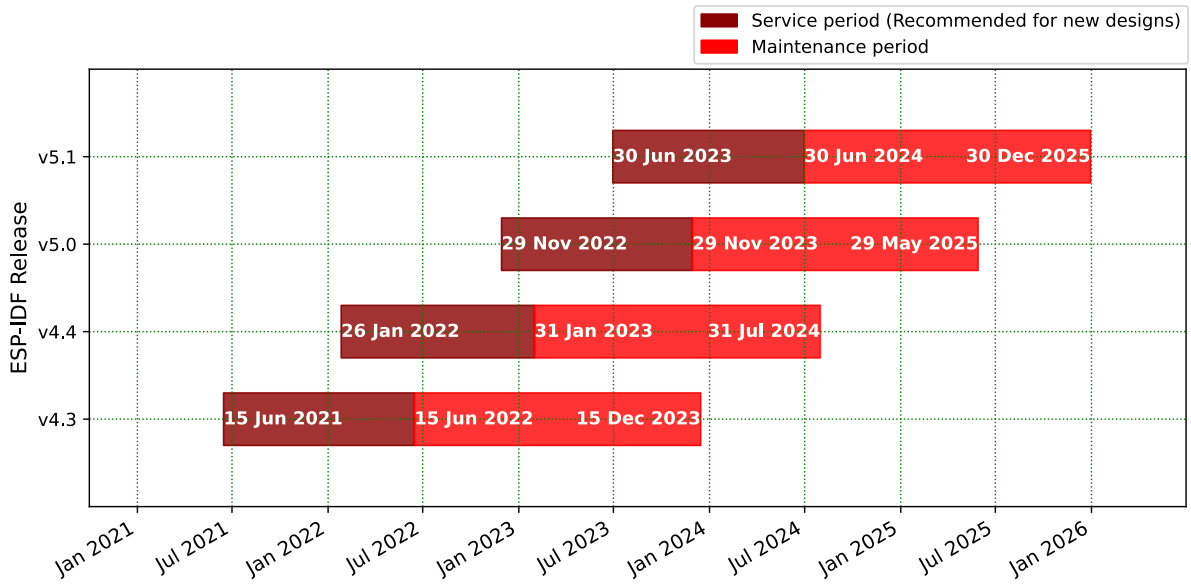

7.5 查看当前版本

查看 ESP-IDF 本地副本的版本，请使用 idf.py 命令:

```
idf.py --version
```

此外，由于 ESP-IDF 的版本也已编译至固件中，因此您也可以使用宏 `IDF_VER` 查看 ESP-IDF 的版本（以字符串的格式）。ESP-IDF 默认引导程序会在设备启动时打印 ESP-IDF 的版本。请注意，在 GitHub 仓库中的代码更新时，代码中的版本信息仅会在源代码重新编译或在清除编译时才会更新，因此打印出来的版本可能并不是最新的。

如果编写的代码需要支持多个 ESP-IDF 版本，可以在编译时使用*compile-time macros* 检查版本。

几个 ESP-IDF 版本的例子:

版本字符串	含义
`v3.2-dev-306-gbeb3611ca`	master 分支上的预发布版本。 - `v3.2-dev`：为 v3.2 进行的开发。 - `306`：v3.2 开发启动后的 commit 数量。 - `beb3611ca`：commit 标识符。
`v3.0.2`	稳定版本，标签为 `v3.0.2`。
`v3.1-beta1-75-g346d6b0ea`	v3.1 的 beta 测试版本（可参考更新至一个发布分支）。 - `v3.1-beta1` - 预发布标签。 - `75`：添加预发布 beta 标签后的 commit 数量。 - `346d6b0ea`：commit 标识符。
`v3.0.1-dirty`	稳定版本，标签为 `v3.0.1`。 - `dirty` 代表 ESP-IDF 的本地副本有修改。

7.6 Git 工作流

乐鑫 ESP-IDF 团队的 (Git) 开发工作流程如下：

- 新的改动总是在 master 分支（最新版本）上进行。master 分支上的 ESP-IDF 版本总带有 `-dev` 标签，表示“正在开发中”，例 `v3.1-dev`。
- 这些改动将首先在乐鑫的内部 Git 仓库进行代码审阅与测试，而后在自动化测试完成后推至 GitHub。
- 新版本一旦完成特性开发（在 `master` 分支上进行）并达到进入 beta 测试的标准，则将该版本切换至一个新分支（例 `release/v3.1`）。此外，该分支还打上预发布标签（例 `v3.1-beta1`）。您可以在 GitHub 平台上查看 ESP-IDF 的完整 分支列表 和 标签列表。Beta 预发布版本可能仍存在大量“已知问题”(Known Issue)。
- 随着对 beta 版本的不断测试，bug 修复将同时增加至该发布分支和 `master` 分支。而且，`master` 分支可能也已经开始为下个版本开发新特性了。
- 当测试快结束时，该发布分支上将增加一个 rc 标签，代表候选发布 (Release Candidate)，例 `v3.1-rc1`。此时，该分支仍属于预发布版本。
- 如果一直未发现或报告重大 bug，则该预发布版本将最终增加“主要版本”（例 `v4.0`）或“次要版本”标记（例 `v3.1`），成为正式发布版本，并体现在 发布说明页面 。
- 后续，该版本中发现的 bug 都将在该发布分支上进行修复。人工测试完成后，该分支将增加一个 Bugfix 版本标签（例 `v3.1.1`），并体现在 发布说明页面 。

7.7 更新 ESP-IDF

请根据您的实际情况，对 ESP-IDF 进行更新。

- 如有量产用途，建议参考*更新至一个稳定发布版本*。
- 如需测试/研发/尝试最新特性，建议参考*更新至 master 分支* 。
- 两者折衷建议参考*更新至一个发布分支*。

注解： 在参考本指南时，请首先获得 ESP-IDF 的本地副本，具体步骤请参考入门指南 中的介绍。

7.7.1 更新至一个稳定发布版本

对于量产用户，推荐更新至一个新的 ESP-IDF 发布版本，请参考以下步骤：

- 请定期查看 发布说明页面 ，了解最新发布情况。
- 如有新发布的 Bugfix 版本（例 `v3.0.1` 或 `v3.0.2`）时，请将新的 Bugfix 版本更新至您的 ESP-IDF 目录：

```
cd $IDF_PATH
git fetch
git checkout vX.Y.Z
git submodule update --init --recursive
```

- 在主要版本或次要版本新发布时，请查看发布说明中的具体描述，并决定是否升级您的版本。具体命令与上方描述一致。

注解： 如果您之前在安装 ESP-IDF 时使用了 zip 文件包，而非通过 Git 命令，则您将无法使用 Git 命令进行版本升级，此属正常情况。这种情况下，请重新下载最新 zip 文件包，并替换掉之前 `IDF_PATH` 下的全部内容。

7.7.2 更新至一个预发布版本

您也可以将您的本地副本切换（命令 `git checkout`）至一个预发布版本或 rc 版本，具体方法请参考更新至一个稳定发布版本 中的描述。

预发布版本通常不体现在 发布说明页面。更多详情，请查看完整 标签列表。使用预发布版本的注意事项，请参考更新至一个发布分支 中的描述。

7.7.3 更新至 master 分支

注解： ESP-IDF 中 master 分支上的代码会时时更新，因此使用 master 分支相当在 “流血的边缘试探”，存在一定风险。

如需使用 ESP-IDF 的 master 分支，请参考以下步骤：

- 本地切换至 master 分支:

```
cd $IDF_PATH
git checkout master
git pull
git submodule update --init --recursive
```

- 此外，您还应在后续工作中不时使用 `git pull` 命令，将远端 master 上的更新同步到本地。注意，在更新 master 分支后，您可能需要更改工程代码，也可能遇到新的 bug。
- 如需从 master 分支切换至一个发布分支或稳定版本，请使用 `git checkout` 命令。

重要： 强烈建议您定期使用 `git pull` 和 `git submodule update --init --recursive` 命令，确保本地副本的及时更新。旧的 master 分支相当于一个 “快照”，可能存在未记录的问题，且无法获得支持。对于半稳定版本，请参考更新至一个发布分支。

7.7.4 更新至一个发布分支

从稳定性来说，使用 “发布分支” 相当于在使用 master 分支和稳定版本之间进行折衷，包含一些 master 分支上的新特性，但也同时保证可通过 beta 测试且基本完成了 bug 修复。

更多详情，请前往 GitHub 查看完整 标签列表。

举例，您可以关注 ESP-IDF v3.1 分支，随时关注该分支上的 Bugfix 版本发布（例 `v3.1.1` 等）：

```
cd $IDF_PATH
git fetch
git checkout release/v3.1
git pull
git submodule update --init --recursive
```

您每次在该分支上使用 `git pull` 时都相当于把最新的 Bugfix 版本发布更新至您的本地副本中。

注解： 发布分支并不会有专门的配套文档，建议您使用与本分支最接近版本的文档。

Chapter 8

资源

8.1 PlatformIO

- *What is PlatformIO?*
- *Installation*
- *Configuration*
- *Tutorials*
- *Project Examples*
- *Next Steps*

8.1.1 What is PlatformIO?

PlatformIO is a cross-platform embedded development environment with out-of-the-box support for ESP-IDF.

Since ESP-IDF support within PlatformIO is not maintained by the Espressif team, please report any issues with PlatformIO directly to its developers in the official PlatformIO repositories.

A detailed overview of the PlatformIO ecosystem and its philosophy can be found in the official PlatformIO documentation.

8.1.2 Installation

- PlatformIO IDE is a toolset for embedded C/C++ development available on Windows, macOS and Linux platforms
- PlatformIO Core (CLI) is a command-line tool that consists of multi-platform build system, platform and library managers and other integration components. It can be used with a variety of code development environments and allows integration with cloud platforms and web services

8.1.3 Configuration

Please go through the official PlatformIO configuration guide for ESP-IDF.

8.1.4 Tutorials

- ESP-IDF and ESP32-DevKitC: debugging, unit testing, project analysis

8.1.5 Project Examples

Please check ESP-IDF page in the official PlatformIO documentation

8.1.6 Next Steps

Here are some useful links for exploring the PlatformIO ecosystem:

- Learn more about integrations with other IDEs/Text Editors
- Get help from PlatformIO community

8.2 有用的链接

- 您可以在 ESP32 论坛 中提出您的问题，访问社区资源。
- 您可以通过 GitHub 的 Issues 版块提交 bug 或功能请求。在提交新 Issue 之前，请先查看现有的 Issues。
- 您可以在 ESP IoT Solution 库中找到基于 ESP-IDF 的 解决方案、应用实例、组件和驱动 等内容。多数文档均提供中英文版本。
- 通过 Arduino 平台开发应用，请参考 ESP32 Wi-Fi 芯片的 Arduino 内核。
- 关于 ESP32 的书籍列表，请查看 乐鑫 网站。
- 如果您有兴趣参与到 ESP-IDF 的开发，请查阅*Contributions Guide*。
- 关于 ESP32 的其它信息，请查看官网 文档 版块。
- 关于本文档的 PDF 和 HTML 格式下载（最新版本和早期版本），请点击 下载。

Chapter 9

Copyrights and Licenses

9.1 Software Copyrights

All original source code in this repository is Copyright (C) 2015-2022 Espressif Systems. This source code is licensed under the Apache License 2.0 as described in the file LICENSE.

Additional third party copyrighted code is included under the following licenses.

Where source code headers specify Copyright & License information, this information takes precedence over the summaries made here.

9.1.1 Firmware Components

These third party libraries can be included into the application (firmware) produced by ESP-IDF.

- Newlib is licensed under the BSD License and is Copyright of various parties, as described in COPYING.NEWLIB.
- Xtensa header files are Copyright (C) 2013 Tensilica Inc and are licensed under the MIT License as reproduced in the individual header files.
- Original parts of FreeRTOS (components/freertos) are Copyright (C) 2017 Amazon.com, Inc. or its affiliates are licensed under the MIT License, as described in license.txt.
- Original parts of LWIP (components/lwip) are Copyright (C) 2001, 2002 Swedish Institute of Computer Science and are licensed under the BSD License as described in COPYING file.
- wpa_supplicant Copyright (c) 2003-2005 Jouni Malinen and licensed under the BSD license.
- FreeBSD net80211 Copyright (c) 2004-2008 Sam Leffler, Errno Consulting and licensed under the BSD license.
- JSMN JSON Parser (components/jsmn) Copyright (c) 2010 Serge A. Zaitsev and licensed under the MIT license.
- argtable3 argument parsing library Copyright (C) 1998-2001,2003-2011,2013 Stewart Heitmann and licensed under 3-clause BSD license.
- linenoise line editing library Copyright (c) 2010-2014 Salvatore Sanfilippo, Copyright (c) 2010-2013 Pieter Noordhuis, licensed under 2-clause BSD license.
- libcoap COAP library Copyright (c) 2010-2017 Olaf Bergmann and others, is licensed under 2-clause BSD license as described in LICENSE file and COPYING file .
- libexpat XML parsing library Copyright (c) 1998-2000 Thai Open Source Software Center Ltd and Clark Cooper, Copyright (c) 2001-2017 Expat maintainers, is licensed under MIT license as described in COPYING file .
- FatFS library, Copyright (C) 2017 ChaN, is licensed under a BSD-style license .
- cJSON library, Copyright (c) 2009-2017 Dave Gamble and cJSON contributors, is licensed under MIT license as described in LICENSE file .
- libsodium library, Copyright (c) 2013-2018 Frank Denis, is licensed under ISC license as described in LICENSE file .
- micro-ecc library, Copyright (c) 2014 Kenneth MacKay, is licensed under 2-clause BSD license.

- nghttp2 library, Copyright (c) 2012, 2014, 2015, 2016 Tatsuhiro Tsujikawa, Copyright (c) 2012, 2014, 2015, 2016 nghttp2 contributors, is licensed under MIT license as described in COPYING file .
- Mbed TLS library, Copyright (C) 2006-2018 ARM Limited, is licensed under Apache License 2.0 as described in LICENSE file .
- SPIFFS library, Copyright (c) 2013-2017 Peter Andersson, is licensed under MIT license as described in LICENSE file .
- TinyCBOR library, Copyright (c) 2017 Intel Corporation, is licensed under MIT License as described in LICENSE file .
- SD/MMC driver is derived from OpenBSD SD/MMC driver, Copyright (c) 2006 Uwe Stuehler, and is licensed under BSD license.
- Asio , Copyright (c) 2003-2018 Christopher M. Kohlhoff is licensed under the Boost Software License as described in COPYING file.
- ESP-MQTT MQTT Package (contiki-mqtt) - Copyright (c) 2014, Stephen Robinson, MQTT-ESP - Tuan PM <tuanpm at live dot com> is licensed under Apache License 2,0 as described in LICENSE file .
- BLE Mesh is adapted from Zephyr Project, Copyright (c) 2017-2018 Intel Corporation and licensed under Apache License 2.0
- mynewt-nimble Apache Mynewt NimBLE, Copyright 2015-2018, The Apache Software Foundation, is licensed under Apache License 2.0 as described in LICENSE file.
- cryptoauthlib Microchip CryptoAuthentication Library - Copyright (c) 2015 - 2018 Microchip Technology Inc, is licensed under common Microchip software License as described in LICENSE file
- :component_file:‘ TLSF allocator <heap/heap_tlsf.c>‘ Two Level Segregated Fit memory allocator, Copyright (c) 2006-2016, Matthew Conte, and licensed under the BSD license.
- qrcode QR Code generator library Copyright (c) Project Nayuki, is licensed under MIT license.
- freemodbus Copyright (c) 2006-2013 Christian Walter, Armink and licensed under the BSD license.

9.1.2 Build Tools

This is the list of licenses for tools included in this repository, which are used to build applications. The tools do not become part of the application (firmware), so their license does not affect licensing of the application.

- esptool.py is Copyright (C) 2014-2016 Fredrik Ahlberg, Angus Gratton and is licensed under the GNU General Public License v2, as described in LICENSE file.
- KConfig is Copyright (C) 2002 Roman Zippel and others, and is licensed under the GNU General Public License V2.

9.1.3 Documentation

- HTML version of the ESP-IDF Programming Guide uses the Sphinx theme sphinx_idf_theme, which is Copyright (c) 2013-2020 Dave Snider, Read the Docs, Inc. & contributors, and Espressif Systems (Shanghai) CO., LTD. It is based on sphinx_rtd_theme. Both are licensed under MIT license.

9.2 ROM Source Code Copyrights

ESP32 mask ROM hardware includes binaries compiled from portions of the following third party software:

- Newlib , licensed under the BSD License and is Copyright of various parties, as described in COPYING.NEWLIB.
- Xtensa libhal, Copyright (c) Tensilica Inc and licensed under the MIT license (see below).
- TinyBasic Plus, Copyright Mike Field & Scott Lawrence and licensed under the MIT license (see below).
- miniz, by Rich Geldreich - placed into the public domain.
- wpa_supplicant Copyright (c) 2003-2005 Jouni Malinen and licensed under the BSD license.
- TJpgDec Copyright (C) 2011, ChaN, all right reserved. See below for license.

9.3 Xtensa libhal MIT License

Copyright (c) 2003, 2006, 2010 Tensilica Inc.

Permission is hereby granted, free of charge, to any person obtaining a copy of this software and associated documentation files (the "Software"), to deal in the Software without restriction, including without limitation the rights to use, copy, modify, merge, publish, distribute, sublicense, and/or sell copies of the Software, and to permit persons to whom the Software is furnished to do so, subject to the following conditions:

The above copyright notice and this permission notice shall be included in all copies or substantial portions of the Software.

THE SOFTWARE IS PROVIDED "AS IS", WITHOUT WARRANTY OF ANY KIND, EXPRESS OR IMPLIED, INCLUDING BUT NOT LIMITED TO THE WARRANTIES OF MERCHANTABILITY, FITNESS FOR A PARTICULAR PURPOSE AND NONINFRINGEMENT. IN NO EVENT SHALL THE AUTHORS OR COPYRIGHT HOLDERS BE LIABLE FOR ANY CLAIM, DAMAGES OR OTHER LIABILITY, WHETHER IN AN ACTION OF CONTRACT, TORT OR OTHERWISE, ARISING FROM, OUT OF OR IN CONNECTION WITH THE SOFTWARE OR THE USE OR OTHER DEALINGS IN THE SOFTWARE.

9.4 TinyBasic Plus MIT License

Copyright (c) 2012-2013

Permission is hereby granted, free of charge, to any person obtaining a copy of this software and associated documentation files (the "Software"), to deal in the Software without restriction, including without limitation the rights to use, copy, modify, merge, publish, distribute, sublicense, and/or sell copies of the Software, and to permit persons to whom the Software is furnished to do so, subject to the following conditions:

The above copyright notice and this permission notice shall be included in all copies or substantial portions of the Software.

THE SOFTWARE IS PROVIDED "AS IS", WITHOUT WARRANTY OF ANY KIND, EXPRESS OR IMPLIED, INCLUDING BUT NOT LIMITED TO THE WARRANTIES OF MERCHANTABILITY, FITNESS FOR A PARTICULAR PURPOSE AND NONINFRINGEMENT. IN NO EVENT SHALL THE AUTHORS OR COPYRIGHT HOLDERS BE LIABLE FOR ANY CLAIM, DAMAGES OR OTHER LIABILITY, WHETHER IN AN ACTION OF CONTRACT, TORT OR OTHERWISE, ARISING FROM, OUT OF OR IN CONNECTION WITH THE SOFTWARE OR THE USE OR OTHER DEALINGS IN THE SOFTWARE.

9.5 TJpgDec License

TJpgDec - Tiny JPEG Decompressor R0.01 (C)ChaN, 2011 The TJpgDec is a generic JPEG decompressor module for tiny embedded systems. This is a free software that opened for education, research and commercial developments under license policy of following terms.

Copyright (C) 2011, ChaN, all right reserved.

- The TJpgDec module is a free software and there is NO WARRANTY.
- No restriction on use. You can use, modify and redistribute it for personal, non-profit or commercial products UNDER YOUR RESPONSIBILITY.
- Redistributions of source code must retain the above copyright notice.

Chapter 10

关于本指南

本指南为 乐鑫 公司 ESP32 官方应用开发框架 ESP-IDF 的配套文档。

ESP32 芯片是一款 2.4 GHz Wi-Fi 和蓝牙双模芯片，内置 1 或 2 个 Xtensa® 32 位 LX6 处理器，运算能力最高可达 600 DMIPS。

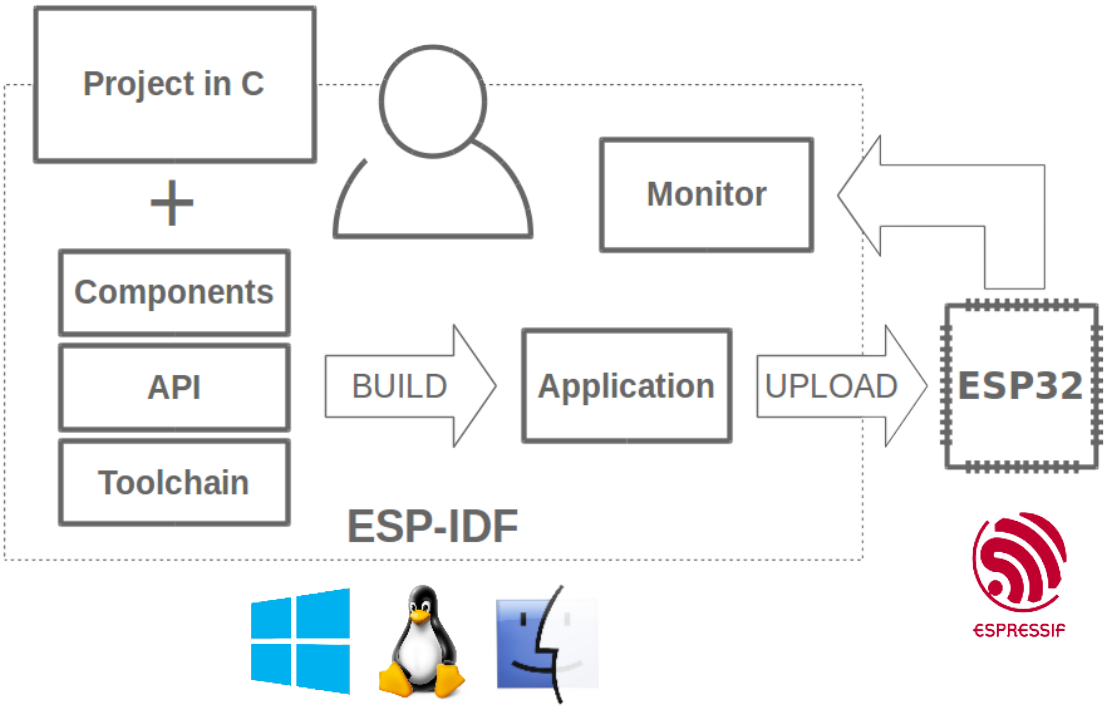

图 1: 乐鑫物联网综合开发框架

ESP-IDF 即乐鑫物联网开发框架，可为在 Windows、Linux 和 macOS 系统平台上开发 ESP32 应用程序提供工具链、API、组件和工作流程的支持。

Chapter 11

切换语言

《ESP-IDF 编程指南》部分文档现在有两种语言的版本。如有出入请以英文版本为准。

- 英文
- 中文

如下图所示，如果该文档两种语言版本均具备，您可以通过点击文档上方的语言链接轻松进行语言切换。

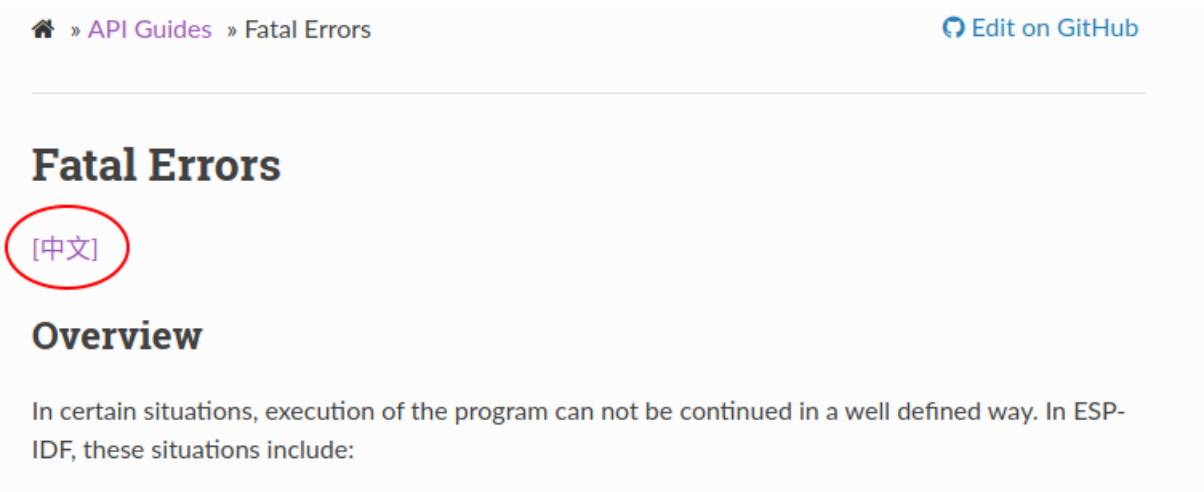

- genindex

索引

符号

_ESP_NETIF_SUPPRESS_LEGACY_WARNING_ (*C 宏*), 655
[anonymous] (*C++ enum*), 152, 385, 1356

A

ADC1_CHANNEL_0 (*C++ enumerator*), 674
ADC1_CHANNEL_0_GPIO_NUM (*C 宏*), 678
ADC1_CHANNEL_1 (*C++ enumerator*), 675
ADC1_CHANNEL_1_GPIO_NUM (*C 宏*), 678
ADC1_CHANNEL_2 (*C++ enumerator*), 675
ADC1_CHANNEL_2_GPIO_NUM (*C 宏*), 678
ADC1_CHANNEL_3 (*C++ enumerator*), 675
ADC1_CHANNEL_3_GPIO_NUM (*C 宏*), 678
ADC1_CHANNEL_4 (*C++ enumerator*), 675
ADC1_CHANNEL_4_GPIO_NUM (*C 宏*), 678
ADC1_CHANNEL_5 (*C++ enumerator*), 675
ADC1_CHANNEL_5_GPIO_NUM (*C 宏*), 678
ADC1_CHANNEL_6 (*C++ enumerator*), 675
ADC1_CHANNEL_6_GPIO_NUM (*C 宏*), 678
ADC1_CHANNEL_7 (*C++ enumerator*), 675
ADC1_CHANNEL_7_GPIO_NUM (*C 宏*), 678
ADC1_CHANNEL_MAX (*C++ enumerator*), 675
adc1_channel_t (*C++ enum*), 674
adc1_config_channel_atten (*C++ function*), 670
adc1_config_width (*C++ function*), 671
adc1_get_raw (*C++ function*), 671
ADC1_GPIO32_CHANNEL (*C 宏*), 678
ADC1_GPIO33_CHANNEL (*C 宏*), 678
ADC1_GPIO34_CHANNEL (*C 宏*), 678
ADC1_GPIO35_CHANNEL (*C 宏*), 678
ADC1_GPIO36_CHANNEL (*C 宏*), 678
ADC1_GPIO37_CHANNEL (*C 宏*), 678
ADC1_GPIO38_CHANNEL (*C 宏*), 678
ADC1_GPIO39_CHANNEL (*C 宏*), 678
adc1_pad_get_io_num (*C++ function*), 670
adc1_ulp_enable (*C++ function*), 672
ADC2_CHANNEL_0 (*C++ enumerator*), 675
ADC2_CHANNEL_0_GPIO_NUM (*C 宏*), 678
ADC2_CHANNEL_1 (*C++ enumerator*), 675
ADC2_CHANNEL_1_GPIO_NUM (*C 宏*), 678
ADC2_CHANNEL_2 (*C++ enumerator*), 675
ADC2_CHANNEL_2_GPIO_NUM (*C 宏*), 678
ADC2_CHANNEL_3 (*C++ enumerator*), 675
ADC2_CHANNEL_3_GPIO_NUM (*C 宏*), 678
ADC2_CHANNEL_4 (*C++ enumerator*), 675
ADC2_CHANNEL_4_GPIO_NUM (*C 宏*), 678
ADC2_CHANNEL_5 (*C++ enumerator*), 675
ADC2_CHANNEL_5_GPIO_NUM (*C 宏*), 678
ADC2_CHANNEL_6 (*C++ enumerator*), 675
ADC2_CHANNEL_6_GPIO_NUM (*C 宏*), 679
ADC2_CHANNEL_7 (*C++ enumerator*), 675
ADC2_CHANNEL_7_GPIO_NUM (*C 宏*), 679
ADC2_CHANNEL_8 (*C++ enumerator*), 675
ADC2_CHANNEL_8_GPIO_NUM (*C 宏*), 679
ADC2_CHANNEL_9 (*C++ enumerator*), 675
ADC2_CHANNEL_9_GPIO_NUM (*C 宏*), 679
ADC2_CHANNEL_MAX (*C++ enumerator*), 675
adc2_channel_t (*C++ enum*), 675
adc2_config_channel_atten (*C++ function*), 672
adc2_get_raw (*C++ function*), 673
ADC2_GPIO0_CHANNEL (*C 宏*), 678
ADC2_GPIO12_CHANNEL (*C 宏*), 678
ADC2_GPIO13_CHANNEL (*C 宏*), 678
ADC2_GPIO14_CHANNEL (*C 宏*), 678
ADC2_GPIO15_CHANNEL (*C 宏*), 678
ADC2_GPIO25_CHANNEL (*C 宏*), 679
ADC2_GPIO26_CHANNEL (*C 宏*), 679
ADC2_GPIO27_CHANNEL (*C 宏*), 679
ADC2_GPIO2_CHANNEL (*C 宏*), 678
ADC2_GPIO4_CHANNEL (*C 宏*), 678
adc2_pad_get_io_num (*C++ function*), 672
adc2_vref_to_gpio (*C++ function*), 674
ADC_ATTEN_0db (*C 宏*), 674
ADC_ATTEN_11db (*C 宏*), 674
ADC_ATTEN_2_5db (*C 宏*), 674
ADC_ATTEN_6db (*C 宏*), 674
ADC_ATTEN_DB_0 (*C++ enumerator*), 668
ADC_ATTEN_DB_11 (*C++ enumerator*), 669
ADC_ATTEN_DB_2_5 (*C++ enumerator*), 668
ADC_ATTEN_DB_6 (*C++ enumerator*), 669
ADC_ATTEN_MAX (*C++ enumerator*), 669
adc_atten_t (*C++ enum*), 668
adc_bits_width_t (*C++ enum*), 669
ADC_CHANNEL_0 (*C++ enumerator*), 668
ADC_CHANNEL_1 (*C++ enumerator*), 668
ADC_CHANNEL_2 (*C++ enumerator*), 668
ADC_CHANNEL_3 (*C++ enumerator*), 668
ADC_CHANNEL_4 (*C++ enumerator*), 668
ADC_CHANNEL_5 (*C++ enumerator*), 668
ADC_CHANNEL_6 (*C++ enumerator*), 668
ADC_CHANNEL_7 (*C++ enumerator*), 668

ADC_CHANNEL_8 (C++ enumerator), 668
ADC_CHANNEL_9 (C++ enumerator), 668
ADC_CHANNEL_MAX (C++ enumerator), 668
adc_channel_t (C++ enum), 668
ADC_CONV_ALTER_UNIT (C++ enumerator), 669
ADC_CONV_BOTH_UNIT (C++ enumerator), 669
ADC_CONV_SINGLE_UNIT_1 (C++ enumerator), 669
ADC_CONV_SINGLE_UNIT_2 (C++ enumerator), 669
ADC_CONV_UNIT_MAX (C++ enumerator), 669
adc_digi_config_t (C++ class), 666
adc_digi_config_t::adc1_pattern (C++ member), 667
adc_digi_config_t::adc1_pattern_len (C++ member), 667
adc_digi_config_t::adc2_pattern (C++ member), 667
adc_digi_config_t::adc2_pattern_len (C++ member), 667
adc_digi_config_t::conv_limit_en (C++ member), 667
adc_digi_config_t::conv_limit_num (C++ member), 667
adc_digi_config_t::conv_mode (C++ member), 667
adc_digi_config_t::format (C++ member), 667
adc_digi_controller_config (C++ function), 674
adc_digi_convert_mode_t (C++ enum), 669
adc_digi_deinit (C++ function), 674
ADC_DIGI_FORMAT_11BIT (C++ enumerator), 670
ADC_DIGI_FORMAT_12BIT (C++ enumerator), 670
ADC_DIGI_FORMAT_MAX (C++ enumerator), 670
adc_digi_init (C++ function), 674
adc_digi_output_data_t (C++ class), 666
adc_digi_output_data_t::channel (C++ member), 666
adc_digi_output_data_t::data (C++ member), 666
adc_digi_output_data_t::type1 (C++ member), 666
adc_digi_output_data_t::type2 (C++ member), 666
adc_digi_output_data_t::unit (C++ member), 666
adc_digi_output_data_t::val (C++ member), 666
adc_digi_output_format_t (C++ enum), 670
adc_digi_pattern_table_t (C++ class), 666
adc_digi_pattern_table_t::atten (C++ member), 666
adc_digi_pattern_table_t::bit_width (C++ member), 666
adc_digi_pattern_table_t::channel (C++ member), 666
adc_digi_pattern_table_t::val (C++ member), 666
ADC_ENCODE_11BIT (C++ enumerator), 675
ADC_ENCODE_12BIT (C++ enumerator), 675
ADC_ENCODE_MAX (C++ enumerator), 676
adc_gpio_init (C++ function), 670
ADC_I2S_DATA_SRC_ADC (C++ enumerator), 669
ADC_I2S_DATA_SRC_IO_SIG (C++ enumerator), 669
ADC_I2S_DATA_SRC_MAX (C++ enumerator), 669
adc_i2s_encode_t (C++ enum), 675
adc_i2s_mode_init (C++ function), 665
adc_i2s_source_t (C++ enum), 669
adc_power_acquire (C++ function), 670
adc_power_off (C++ function), 670
adc_power_on (C++ function), 670
adc_power_release (C++ function), 670
adc_set_clk_div (C++ function), 672
adc_set_data_inv (C++ function), 672
adc_set_data_width (C++ function), 672
adc_set_i2s_data_source (C++ function), 665
ADC_UNIT_1 (C++ enumerator), 668
ADC_UNIT_2 (C++ enumerator), 668
ADC_UNIT_ALTER (C++ enumerator), 668
ADC_UNIT_BOTH (C++ enumerator), 668
ADC_UNIT_MAX (C++ enumerator), 668
adc_unit_t (C++ enum), 668
adc_vref_to_gpio (C++ function), 673
ADC_WIDTH_10Bit (C 宏), 674
ADC_WIDTH_11Bit (C 宏), 674
ADC_WIDTH_12Bit (C 宏), 674
ADC_WIDTH_9Bit (C 宏), 674
ADC_WIDTH_BIT_10 (C++ enumerator), 669
ADC_WIDTH_BIT_11 (C++ enumerator), 669
ADC_WIDTH_BIT_12 (C++ enumerator), 669
ADC_WIDTH_BIT_9 (C++ enumerator), 669
ADC_WIDTH_BIT_DEFAULT (C 宏), 674
ADC_WIDTH_MAX (C++ enumerator), 669
ADD_DEV_FLUSHABLE_DEV_FLAG (C 宏), 367
ADD_DEV_RM_AFTER_PROV_FLAG (C 宏), 367
ADD_DEV_START_PROV_NOW_FLAG (C 宏), 367
ADV_CHNL_37 (C++ enumerator), 202
ADV_CHNL_38 (C++ enumerator), 202
ADV_CHNL_39 (C++ enumerator), 202
ADV_CHNL_ALL (C++ enumerator), 202
ADV_FILTER_ALLOW_SCAN_ANY_CON_ANY (C++ enumerator), 202
ADV_FILTER_ALLOW_SCAN_ANY_CON_WLST (C++ enumerator), 202
ADV_FILTER_ALLOW_SCAN_WLST_CON_ANY (C++ enumerator), 202
ADV_FILTER_ALLOW_SCAN_WLST_CON_WLST (C++ enumerator), 202
ADV_TYPE_DIRECT_IND_HIGH (C++ enumerator), 202
ADV_TYPE_DIRECT_IND_LOW (C++ enumerator), 202
ADV_TYPE_IND (C++ enumerator), 202
ADV_TYPE_NONCONN_IND (C++ enumerator), 202

ADV_TYPE_SCAN_IND (*C++ enumerator*), 202

B

BD_ADDR (*C++ type*), 379
BD_ADDR_LEN (*C 宏*), 367
BLE_ADDR_TYPE_PUBLIC (*C++ enumerator*), 159
BLE_ADDR_TYPE_RANDOM (*C++ enumerator*), 159
BLE_ADDR_TYPE_RPA_PUBLIC (*C++ enumerator*), 159
BLE_ADDR_TYPE_RPA_RANDOM (*C++ enumerator*), 159
BLE_BIT (*C 宏*), 197
BLE_HCI_UART_H4_ACL (*C 宏*), 332
BLE_HCI_UART_H4_CMD (*C 宏*), 332
BLE_HCI_UART_H4_EVT (*C 宏*), 332
BLE_HCI_UART_H4_NONE (*C 宏*), 332
BLE_HCI_UART_H4_SCO (*C 宏*), 332
BLE_SCAN_DUPLICATE_DISABLE (*C++ enumerator*), 203
BLE_SCAN_DUPLICATE_ENABLE (*C++ enumerator*), 203
BLE_SCAN_DUPLICATE_MAX (*C++ enumerator*), 203
BLE_SCAN_FILTER_ALLOW_ALL (*C++ enumerator*), 203
BLE_SCAN_FILTER_ALLOW_ONLY_WLST (*C++ enumerator*), 203
BLE_SCAN_FILTER_ALLOW_UND_RPA_DIR (*C++ enumerator*), 203
BLE_SCAN_FILTER_ALLOW_WLIST_RPA_DIR (*C++ enumerator*), 203
BLE_SCAN_TYPE_ACTIVE (*C++ enumerator*), 203
BLE_SCAN_TYPE_PASSIVE (*C++ enumerator*), 203
BLE_UUID128_VAL_LENGTH (*C 宏*), 1018
BLE_WL_ADDR_TYPE_PUBLIC (*C++ enumerator*), 159
BLE_WL_ADDR_TYPE_RANDOM (*C++ enumerator*), 159
BT_CONTROLLER_INIT_CONFIG_DEFAULT (*C 宏*), 152
BT_OCTET32 (*C++ type*), 379
BT_OCTET32_LEN (*C 宏*), 367
BTC_HF_CALL_END_TIMEOUT (*C 宏*), 301
BTC_HF_INVALID_IDX (*C 宏*), 302
BTC_HF_SECURITY (*C 宏*), 301
BTC_HF_SERVICE_NAMES (*C 宏*), 301
BTC_HF_SERVICES (*C 宏*), 301
BTC_HFAG_SERVICE_NAME (*C 宏*), 301
BTC_HSAG_SERVICE_NAME (*C 宏*), 301

C

CHIP_ESP32 (*C++ enumerator*), 1329
CHIP_ESP32C3 (*C++ enumerator*), 1329
CHIP_ESP32S2 (*C++ enumerator*), 1329
CHIP_ESP32S3 (*C++ enumerator*), 1329
CHIP_FEATURE_BLE (*C 宏*), 1328
CHIP_FEATURE_BT (*C 宏*), 1328
CHIP_FEATURE_EMB_FLASH (*C 宏*), 1328
CHIP_FEATURE_WIFI_BGN (*C 宏*), 1328
CONFIG_ESPTOOLPY_FLASHSIZE, 1035
CONFIG_FEATURE_CACHE_TX_BUF_BIT (*C 宏*), 562
CONFIG_FEATURE_FTM_INITIATOR_BIT (*C 宏*), 562
CONFIG_FEATURE_FTM_RESPONDER_BIT (*C 宏*), 562
CONFIG_FEATURE_WPA3_SAE_BIT (*C 宏*), 562
CONFIG_HEAP_TRACING_STACK_DEPTH (*C 宏*), 1302
CONFIG_LOG_DEFAULT_LEVEL, 1318
CONFIG_LWIP_SNTP_UPDATE_DELAY, 1361
CONFIG_LWIP_USE_ONLY_LWIP_SELECT, 1090
CONFIG_SPIRAM_BANKSWITCH_ENABLE, 1307
CONFIG_SPIRAM_BANKSWITCH_RESERVE, 1307

D

DAC_CHANNEL_1 (*C++ enumerator*), 681
DAC_CHANNEL_1_GPIO_NUM (*C 宏*), 681
DAC_CHANNEL_2 (*C++ enumerator*), 681
DAC_CHANNEL_2_GPIO_NUM (*C 宏*), 681
DAC_CHANNEL_MAX (*C++ enumerator*), 681
dac_channel_t (*C++ enum*), 681
dac_cw_config_t (*C++ class*), 681
dac_cw_config_t::en_ch (*C++ member*), 681
dac_cw_config_t::freq (*C++ member*), 681
dac_cw_config_t::offset (*C++ member*), 681
dac_cw_config_t::phase (*C++ member*), 681
dac_cw_config_t::scale (*C++ member*), 681
dac_cw_generator_config (*C++ function*), 680
dac_cw_generator_disable (*C++ function*), 680
dac_cw_generator_enable (*C++ function*), 680
DAC_CW_PHASE_0 (*C++ enumerator*), 682
DAC_CW_PHASE_180 (*C++ enumerator*), 682
dac_cw_phase_t (*C++ enum*), 682
DAC_CW_SCALE_1 (*C++ enumerator*), 681
DAC_CW_SCALE_2 (*C++ enumerator*), 682
DAC_CW_SCALE_4 (*C++ enumerator*), 682
DAC_CW_SCALE_8 (*C++ enumerator*), 682
dac_cw_scale_t (*C++ enum*), 681
DAC_GPIO25_CHANNEL (*C 宏*), 681
DAC_GPIO26_CHANNEL (*C 宏*), 681
dac_i2s_disable (*C++ function*), 679
dac_i2s_enable (*C++ function*), 679
dac_output_disable (*C++ function*), 680
dac_output_enable (*C++ function*), 680
dac_output_voltage (*C++ function*), 680
dac_pad_get_io_num (*C++ function*), 680
DEFAULT_HTTP_BUF_SIZE (*C 宏*), 923
DEL_DEV_ADDR_FLAG (*C 宏*), 367
DEL_DEV_UUID_FLAG (*C 宏*), 367
DPP_BOOTSTRAP_NFC_URI (*C++ enumerator*), 628
DPP_BOOTSTRAP_PKEX (*C++ enumerator*), 628
DPP_BOOTSTRAP_QR_CODE (*C++ enumerator*), 628
dpp_bootstrap_type (*C++ enum*), 628

E

eAbortSleep (*C++ enumerator*), 1193
eBlocked (*C++ enumerator*), 1193
eDeleted (*C++ enumerator*), 1193
efuse_hal_chip_revision (*C++ function*), 1127
efuse_hal_get_major_chip_version (*C++ function*), 1127
efuse_hal_get_minor_chip_version (*C++ function*), 1127
eIncrement (*C++ enumerator*), 1193
eInvalid (*C++ enumerator*), 1193
eNoAction (*C++ enumerator*), 1193
eNoTasksWaitingTimeout (*C++ enumerator*), 1193
eNotifyAction (*C++ enum*), 1193
eReady (*C++ enumerator*), 1193
eRunning (*C++ enumerator*), 1193
eSetBits (*C++ enumerator*), 1193
eSetValueWithoutOverwrite (*C++ enumerator*), 1193
eSetValueWithOverwrite (*C++ enumerator*), 1193
eSleepModeStatus (*C++ enum*), 1193
ESP_A2D_AUDIO_CFG_EVT (*C++ enumerator*), 276
ESP_A2D_AUDIO_STATE_EVT (*C++ enumerator*), 276
ESP_A2D_AUDIO_STATE_REMOTE_SUSPEND (*C++ enumerator*), 275
ESP_A2D_AUDIO_STATE_STARTED (*C++ enumerator*), 275
ESP_A2D_AUDIO_STATE_STOPPED (*C++ enumerator*), 275
esp_a2d_audio_state_t (*C++ enum*), 275
esp_a2d_cb_event_t (*C++ enum*), 276
esp_a2d_cb_param_t (*C++ union*), 272
esp_a2d_cb_param_t::a2d_audio_cfg_param (*C++ class*), 273
esp_a2d_cb_param_t::a2d_audio_cfg_param::mcc (*C++ member*), 273
esp_a2d_cb_param_t::a2d_audio_cfg_param::remote_bda (*C++ member*), 273
esp_a2d_cb_param_t::a2d_audio_stat_param (*C++ class*), 273
esp_a2d_cb_param_t::a2d_audio_stat_param::remote_bda (*C++ member*), 273
esp_a2d_cb_param_t::a2d_audio_stat_param::state (*C++ member*), 273
esp_a2d_cb_param_t::a2d_conn_stat_param (*C++ class*), 273
esp_a2d_cb_param_t::a2d_conn_stat_param::disc_rsn (*C++ member*), 273
esp_a2d_cb_param_t::a2d_conn_stat_param::remote_bda (*C++ member*), 273
esp_a2d_cb_param_t::a2d_conn_stat_param::state (*C++ member*), 273
esp_a2d_cb_param_t::a2d_prof_stat (*C++ member*), 272
esp_a2d_cb_param_t::a2d_prof_stat_param (*C++ class*), 273
esp_a2d_cb_param_t::a2d_prof_stat_param::init_sta (*C++ member*), 273
esp_a2d_cb_param_t::audio_cfg (*C++ member*), 272
esp_a2d_cb_param_t::audio_stat (*C++ member*), 272
esp_a2d_cb_param_t::conn_stat (*C++ member*), 272
esp_a2d_cb_param_t::media_ctrl_stat (*C++ member*), 272
esp_a2d_cb_param_t::media_ctrl_stat_param (*C++ class*), 273
esp_a2d_cb_param_t::media_ctrl_stat_param::cmd (*C++ member*), 273
esp_a2d_cb_param_t::media_ctrl_stat_param::status (*C++ member*), 273
esp_a2d_cb_t (*C++ type*), 274
ESP_A2D_CIE_LEN_ATRAC (*C 宏*), 274
ESP_A2D_CIE_LEN_M12 (*C 宏*), 274
ESP_A2D_CIE_LEN_M24 (*C 宏*), 274
ESP_A2D_CIE_LEN_SBC (*C 宏*), 274
ESP_A2D_CONNECTION_STATE_CONNECTED (*C++ enumerator*), 275
ESP_A2D_CONNECTION_STATE_CONNECTING (*C++ enumerator*), 275
ESP_A2D_CONNECTION_STATE_DISCONNECTED (*C++ enumerator*), 275
ESP_A2D_CONNECTION_STATE_DISCONNECTING (*C++ enumerator*), 275
ESP_A2D_CONNECTION_STATE_EVT (*C++ enumerator*), 276
esp_a2d_connection_state_t (*C++ enum*), 275
ESP_A2D_DEINIT_SUCCESS (*C++ enumerator*), 276
ESP_A2D_DISC_RSN_ABNORMAL (*C++ enumerator*), 275
ESP_A2D_DISC_RSN_NORMAL (*C++ enumerator*), 275
esp_a2d_disc_rsn_t (*C++ enum*), 275
esp_a2d_init_state_t (*C++ enum*), 276
ESP_A2D_INIT_SUCCESS (*C++ enumerator*), 276
esp_a2d_mcc_t (*C++ class*), 274
esp_a2d_mcc_t::atrac (*C++ member*), 274
esp_a2d_mcc_t::cie (*C++ member*), 274
esp_a2d_mcc_t::m12 (*C++ member*), 274
esp_a2d_mcc_t::m24 (*C++ member*), 274
esp_a2d_mcc_t::sbc (*C++ member*), 274
esp_a2d_mcc_t::type (*C++ member*), 274
ESP_A2D_MCT_ATRAC (*C 宏*), 274
ESP_A2D_MCT_M12 (*C 宏*), 274
ESP_A2D_MCT_M24 (*C 宏*), 274
ESP_A2D_MCT_NON_A2DP (*C 宏*), 274
ESP_A2D_MCT_SBC (*C 宏*), 274
esp_a2d_mct_t (*C++ type*), 274
esp_a2d_media_ctrl (*C++ function*), 271

ESP_A2D_MEDIA_CTRL_ACK_BUSY (C++ enumerator), 275
ESP_A2D_MEDIA_CTRL_ACK_EVT (C++ enumerator), 276
ESP_A2D_MEDIA_CTRL_ACK_FAILURE (C++ enumerator), 275
ESP_A2D_MEDIA_CTRL_ACK_SUCCESS (C++ enumerator), 275
esp_a2d_media_ctrl_ack_t (C++ enum), 275
ESP_A2D_MEDIA_CTRL_CHECK_SRC_RDY (C++ enumerator), 276
ESP_A2D_MEDIA_CTRL_NONE (C++ enumerator), 276
ESP_A2D_MEDIA_CTRL_START (C++ enumerator), 276
ESP_A2D_MEDIA_CTRL_STOP (C++ enumerator), 276
ESP_A2D_MEDIA_CTRL_SUSPEND (C++ enumerator), 276
esp_a2d_media_ctrl_t (C++ enum), 275
ESP_A2D_PROF_STATE_EVT (C++ enumerator), 276
esp_a2d_register_callback (C++ function), 270
esp_a2d_sink_connect (C++ function), 271
esp_a2d_sink_data_cb_t (C++ type), 274
esp_a2d_sink_deinit (C++ function), 271
esp_a2d_sink_disconnect (C++ function), 271
esp_a2d_sink_init (C++ function), 270
esp_a2d_sink_register_data_callback (C++ function), 270
esp_a2d_source_connect (C++ function), 272
esp_a2d_source_data_cb_t (C++ type), 275
esp_a2d_source_deinit (C++ function), 271
esp_a2d_source_disconnect (C++ function), 272
esp_a2d_source_init (C++ function), 271
esp_a2d_source_register_data_callback (C++ function), 272
esp_adc_cal_characteristics_t (C++ class), 677
esp_adc_cal_characteristics_t::adc_num (C++ member), 677
esp_adc_cal_characteristics_t::atten (C++ member), 677
esp_adc_cal_characteristics_t::bit_width (C++ member), 677
esp_adc_cal_characteristics_t::coeff_a (C++ member), 677
esp_adc_cal_characteristics_t::coeff_b (C++ member), 677
esp_adc_cal_characteristics_t::high_curve (C++ member), 677
esp_adc_cal_characteristics_t::low_curve (C++ member), 677
esp_adc_cal_characteristics_t::vref (C++ member), 677
esp_adc_cal_characterize (C++ function), 676
esp_adc_cal_check_efuse (C++ function), 676
esp_adc_cal_get_voltage (C++ function), 677
esp_adc_cal_raw_to_voltage (C++ function), 676
ESP_ADC_CAL_VAL_DEFAULT_VREF (C++ enumerator), 678
ESP_ADC_CAL_VAL_EFUSE_TP (C++ enumerator), 677
ESP_ADC_CAL_VAL_EFUSE_VREF (C++ enumerator), 677
ESP_ADC_CAL_VAL_MAX (C++ enumerator), 678
ESP_ADC_CAL_VAL_NOT_SUPPORTED (C++ enumerator), 678
esp_adc_cal_value_t (C++ enum), 677
esp_alloc_failed_hook_t (C++ type), 1287
ESP_APP_DESC_MAGIC_WORD (C 宏), 1119
esp_app_desc_t (C++ class), 1118
esp_app_desc_t::app_elf_sha256 (C++ member), 1118
esp_app_desc_t::date (C++ member), 1118
esp_app_desc_t::idf_ver (C++ member), 1118
esp_app_desc_t::magic_word (C++ member), 1118
esp_app_desc_t::project_name (C++ member), 1118
esp_app_desc_t::reserv1 (C++ member), 1118
esp_app_desc_t::reserv2 (C++ member), 1118
esp_app_desc_t::secure_version (C++ member), 1118
esp_app_desc_t::time (C++ member), 1118
esp_app_desc_t::version (C++ member), 1118
ESP_APP_ID_MAX (C 宏), 156
ESP_APP_ID_MIN (C 宏), 156
esp_apptrace_buffer_get (C++ function), 1121
esp_apptrace_buffer_put (C++ function), 1121
ESP_APPTRACE_DEST_JTAG (C++ enumerator), 1123
ESP_APPTRACE_DEST_MAX (C++ enumerator), 1124
ESP_APPTRACE_DEST_NUM (C++ enumerator), 1124
esp_apptrace_dest_t (C++ enum), 1123
ESP_APPTRACE_DEST_TRAX (C++ enumerator), 1123
ESP_APPTRACE_DEST_UART0 (C++ enumerator), 1124
esp_apptrace_down_buffer_config (C++ function), 1120
esp_apptrace_down_buffer_get (C++ function), 1122
esp_apptrace_down_buffer_put (C++ func-

tion), 1122
esp_apptrace_fclose (*C++ function*), 1122
esp_apptrace_flush (*C++ function*), 1121
esp_apptrace_flush_nolock (*C++ function*), 1121
esp_apptrace_fopen (*C++ function*), 1122
esp_apptrace_fread (*C++ function*), 1123
esp_apptrace_fseek (*C++ function*), 1123
esp_apptrace_fstop (*C++ function*), 1123
esp_apptrace_ftell (*C++ function*), 1123
esp_apptrace_fwrite (*C++ function*), 1122
esp_apptrace_host_is_connected (*C++ function*), 1122
esp_apptrace_init (*C++ function*), 1120
esp_apptrace_read (*C++ function*), 1122
esp_apptrace_vprintf (*C++ function*), 1121
esp_apptrace_vprintf_to (*C++ function*), 1121
esp_apptrace_write (*C++ function*), 1121
esp_attr_control_t (*C++ class*), 206
esp_attr_control_t::auto_rsp (*C++ member*), 206
esp_attr_desc_t (*C++ class*), 206
esp_attr_desc_t::length (*C++ member*), 206
esp_attr_desc_t::max_length (*C++ member*), 206
esp_attr_desc_t::perm (*C++ member*), 206
esp_attr_desc_t::uuid_length (*C++ member*), 206
esp_attr_desc_t::uuid_p (*C++ member*), 206
esp_attr_desc_t::value (*C++ member*), 206
esp_attr_value_t (*C++ class*), 207
esp_attr_value_t::attr_len (*C++ member*), 207
esp_attr_value_t::attr_max_len (*C++ member*), 207
esp_attr_value_t::attr_value (*C++ member*), 207
ESP_AVRC_BATT_CRITICAL (*C++ enumerator*), 293
ESP_AVRC_BATT_EXTERNAL (*C++ enumerator*), 293
ESP_AVRC_BATT_FULL_CHARGE (*C++ enumerator*), 293
ESP_AVRC_BATT_NORMAL (*C++ enumerator*), 292
esp_avrc_batt_stat_t (*C++ enum*), 292
ESP_AVRC_BATT_WARNING (*C++ enumerator*), 292
ESP_AVRC_BIT_MASK_OP_CLEAR (*C++ enumerator*), 289
ESP_AVRC_BIT_MASK_OP_SET (*C++ enumerator*), 289
esp_avrc_bit_mask_op_t (*C++ enum*), 289
ESP_AVRC_BIT_MASK_OP_TEST (*C++ enumerator*), 289
esp_avrc_ct_cb_event_t (*C++ enum*), 289
esp_avrc_ct_cb_param_t (*C++ union*), 281
esp_avrc_ct_cb_param_t::avrc_ct_change_notify_param (*C++ class*), 281
esp_avrc_ct_cb_param_t::avrc_ct_change_notify_par (*C++ member*), 281
esp_avrc_ct_cb_param_t::avrc_ct_change_notify_par (*C++ member*), 281
esp_avrc_ct_cb_param_t::avrc_ct_conn_stat_param (*C++ class*), 281
esp_avrc_ct_cb_param_t::avrc_ct_conn_stat_param:: (*C++ member*), 282
esp_avrc_ct_cb_param_t::avrc_ct_conn_stat_param:: (*C++ member*), 282
esp_avrc_ct_cb_param_t::avrc_ct_get_rn_caps_rsp_p (*C++ class*), 282
esp_avrc_ct_cb_param_t::avrc_ct_get_rn_caps_rsp_p (*C++ member*), 282
esp_avrc_ct_cb_param_t::avrc_ct_get_rn_caps_rsp_p (*C++ member*), 282
esp_avrc_ct_cb_param_t::avrc_ct_meta_rsp_param (*C++ class*), 282
esp_avrc_ct_cb_param_t::avrc_ct_meta_rsp_param::a (*C++ member*), 282
esp_avrc_ct_cb_param_t::avrc_ct_meta_rsp_param::a (*C++ member*), 282
esp_avrc_ct_cb_param_t::avrc_ct_meta_rsp_param::a (*C++ member*), 282
esp_avrc_ct_cb_param_t::avrc_ct_psth_rsp_param (*C++ class*), 282
esp_avrc_ct_cb_param_t::avrc_ct_psth_rsp_param::k (*C++ member*), 282
esp_avrc_ct_cb_param_t::avrc_ct_psth_rsp_param::k (*C++ member*), 282
esp_avrc_ct_cb_param_t::avrc_ct_psth_rsp_param::r (*C++ member*), 282
esp_avrc_ct_cb_param_t::avrc_ct_psth_rsp_param::t (*C++ member*), 282
esp_avrc_ct_cb_param_t::avrc_ct_rmt_feats_param (*C++ class*), 282
esp_avrc_ct_cb_param_t::avrc_ct_rmt_feats_param:: (*C++ member*), 282
esp_avrc_ct_cb_param_t::avrc_ct_rmt_feats_param:: (*C++ member*), 282
esp_avrc_ct_cb_param_t::avrc_ct_rmt_feats_param:: (*C++ member*), 282
esp_avrc_ct_cb_param_t::avrc_ct_set_volume_rsp_pa (*C++ class*), 283
esp_avrc_ct_cb_param_t::avrc_ct_set_volume_rsp_pa (*C++ member*), 283
esp_avrc_ct_cb_param_t::change_ntf (*C++ member*), 281
esp_avrc_ct_cb_param_t::conn_stat (*C++ member*), 281
esp_avrc_ct_cb_param_t::get_rn_caps_rsp (*C++ member*), 281
esp_avrc_ct_cb_param_t::meta_rsp (*C++ member*), 281
esp_avrc_ct_cb_param_t::psth_rsp (*C++ member*), 281
esp_avrc_ct_cb_param_t::rmt_feats (*C++ member*), 281

esp_avrc_ct_cb_param_t::set_volume_rsp (C++ member), 281
esp_avrc_ct_cb_t (C++ type), 285
ESP_AVRC_CT_CHANGE_NOTIFY_EVT (C++ enumerator), 289
ESP_AVRC_CT_CONNECTION_STATE_EVT (C++ enumerator), 289
esp_avrc_ct_deinit (C++ function), 277
ESP_AVRC_CT_GET_RN_CAPABILITIES_RSP_EVT (C++ enumerator), 289
esp_avrc_ct_init (C++ function), 277
ESP_AVRC_CT_METADATA_RSP_EVT (C++ enumerator), 289
ESP_AVRC_CT_PASSTHROUGH_RSP_EVT (C++ enumerator), 289
ESP_AVRC_CT_PLAY_STATUS_RSP_EVT (C++ enumerator), 289
esp_avrc_ct_register_callback (C++ function), 277
ESP_AVRC_CT_REMOTE_FEATURES_EVT (C++ enumerator), 289
esp_avrc_ct_send_get_rn_capabilities_cmd (C++ function), 277
esp_avrc_ct_send_metadata_cmd (C++ function), 278
esp_avrc_ct_send_passthrough_cmd (C++ function), 278
esp_avrc_ct_send_register_notification_cmd (C++ function), 277
esp_avrc_ct_send_set_absolute_volume_cmd (C++ function), 278
esp_avrc_ct_send_set_player_value_cmd (C++ function), 277
ESP_AVRC_CT_SET_ABSOLUTE_VOLUME_RSP_EVT (C++ enumerator), 289
ESP_AVRC_FEAT_ADV_CTRL (C++ enumerator), 285
ESP_AVRC_FEAT_BROWSE (C++ enumerator), 285
ESP_AVRC_FEAT_FLAG_BROWSING (C++ enumerator), 286
ESP_AVRC_FEAT_FLAG_CAT1 (C++ enumerator), 286
ESP_AVRC_FEAT_FLAG_CAT2 (C++ enumerator), 286
ESP_AVRC_FEAT_FLAG_CAT3 (C++ enumerator), 286
ESP_AVRC_FEAT_FLAG_CAT4 (C++ enumerator), 286
ESP_AVRC_FEAT_FLAG_COVER_ART_GET_IMAGE (C++ enumerator), 286
ESP_AVRC_FEAT_FLAG_COVER_ART_GET_IMAGE_PROP (C++ enumerator), 286
ESP_AVRC_FEAT_FLAG_COVER_ART_GET_LINKED_THUMBNAIL (C++ enumerator), 286
ESP_AVRC_FEAT_META_DATA (C++ enumerator), 285
ESP_AVRC_FEAT_RCCT (C++ enumerator), 285
ESP_AVRC_FEAT_RCTG (C++ enumerator), 285
ESP_AVRC_FEAT_VENDOR (C++ enumerator), 285
esp_avrc_feature_flag_t (C++ enum), 286
esp_avrc_features_t (C++ enum), 285
ESP_AVRC_MD_ATTR_ALBUM (C++ enumerator), 290
ESP_AVRC_MD_ATTR_ARTIST (C++ enumerator), 290
ESP_AVRC_MD_ATTR_GENRE (C++ enumerator), 290
esp_avrc_md_attr_mask_t (C++ enum), 290
ESP_AVRC_MD_ATTR_NUM_TRACKS (C++ enumerator), 290
ESP_AVRC_MD_ATTR_PLAYING_TIME (C++ enumerator), 290
ESP_AVRC_MD_ATTR_TITLE (C++ enumerator), 290
ESP_AVRC_MD_ATTR_TRACK_NUM (C++ enumerator), 290
ESP_AVRC_PLAYBACK_ERROR (C++ enumerator), 293
ESP_AVRC_PLAYBACK_FWD_SEEK (C++ enumerator), 293
ESP_AVRC_PLAYBACK_PAUSED (C++ enumerator), 293
ESP_AVRC_PLAYBACK_PLAYING (C++ enumerator), 293
ESP_AVRC_PLAYBACK_REV_SEEK (C++ enumerator), 293
esp_avrc_playback_stat_t (C++ enum), 293
ESP_AVRC_PLAYBACK_STOPPED (C++ enumerator), 293
esp_avrc_ps_attr_ids_t (C++ enum), 291
esp_avrc_ps_eq_value_ids_t (C++ enum), 291
ESP_AVRC_PS_EQUALIZER (C++ enumerator), 291
ESP_AVRC_PS_EQUALIZER_OFF (C++ enumerator), 291
ESP_AVRC_PS_EQUALIZER_ON (C++ enumerator), 291
ESP_AVRC_PS_MAX_ATTR (C++ enumerator), 291
ESP_AVRC_PS_REPEAT_GROUP (C++ enumerator), 292
ESP_AVRC_PS_REPEAT_MODE (C++ enumerator), 291
ESP_AVRC_PS_REPEAT_OFF (C++ enumerator), 292
ESP_AVRC_PS_REPEAT_SINGLE (C++ enumerator), 292
esp_avrc_ps_rpt_value_ids_t (C++ enum), 291
ESP_AVRC_PS_SCAN_ALL (C++ enumerator), 292
ESP_AVRC_PS_SCAN_GROUP (C++ enumerator), 292
ESP_AVRC_PS_SCAN_MODE (C++ enumerator), 291
ESP_AVRC_PS_SCAN_OFF (C++ enumerator), 292
esp_avrc_ps_scn_value_ids_t (C++ enum), 292
esp_avrc_ps_shf_value_ids_t (C++ enum),

292
ESP_AVRC_PS_SHUFFLE_ALL (C++ enumerator), 292
ESP_AVRC_PS_SHUFFLE_GROUP (C++ enumerator), 292
ESP_AVRC_PS_SHUFFLE_MODE (C++ enumerator), 291
ESP_AVRC_PS_SHUFFLE_OFF (C++ enumerator), 292
esp_avrc_psth_bit_mask_operation (C++ function), 279
esp_avrc_psth_bit_mask_t (C++ class), 284
esp_avrc_psth_bit_mask_t::bits (C++ member), 284
ESP_AVRC_PSTH_FILTER_ALLOWED_CMD (C++ enumerator), 288
ESP_AVRC_PSTH_FILTER_SUPPORT_MAX (C++ enumerator), 289
ESP_AVRC_PSTH_FILTER_SUPPORTED_CMD (C++ enumerator), 289
esp_avrc_psth_filter_t (C++ enum), 288
ESP_AVRC_PT_CMD_0 (C++ enumerator), 287
ESP_AVRC_PT_CMD_1 (C++ enumerator), 287
ESP_AVRC_PT_CMD_2 (C++ enumerator), 287
ESP_AVRC_PT_CMD_3 (C++ enumerator), 287
ESP_AVRC_PT_CMD_4 (C++ enumerator), 287
ESP_AVRC_PT_CMD_5 (C++ enumerator), 287
ESP_AVRC_PT_CMD_6 (C++ enumerator), 287
ESP_AVRC_PT_CMD_7 (C++ enumerator), 287
ESP_AVRC_PT_CMD_8 (C++ enumerator), 287
ESP_AVRC_PT_CMD_9 (C++ enumerator), 287
ESP_AVRC_PT_CMD_ANGLE (C++ enumerator), 288
ESP_AVRC_PT_CMD_BACKWARD (C++ enumerator), 288
ESP_AVRC_PT_CMD_CHAN_DOWN (C++ enumerator), 287
ESP_AVRC_PT_CMD_CHAN_UP (C++ enumerator), 287
ESP_AVRC_PT_CMD_CLEAR (C++ enumerator), 287
ESP_AVRC_PT_CMD_CONT_MENU (C++ enumerator), 286
ESP_AVRC_PT_CMD_DISP_INFO (C++ enumerator), 287
ESP_AVRC_PT_CMD_DOT (C++ enumerator), 287
ESP_AVRC_PT_CMD_DOWN (C++ enumerator), 286
ESP_AVRC_PT_CMD_EJECT (C++ enumerator), 288
ESP_AVRC_PT_CMD_ENTER (C++ enumerator), 287
ESP_AVRC_PT_CMD_EXIT (C++ enumerator), 287
ESP_AVRC_PT_CMD_F1 (C++ enumerator), 288
ESP_AVRC_PT_CMD_F2 (C++ enumerator), 288
ESP_AVRC_PT_CMD_F3 (C++ enumerator), 288
ESP_AVRC_PT_CMD_F4 (C++ enumerator), 288
ESP_AVRC_PT_CMD_F5 (C++ enumerator), 288
ESP_AVRC_PT_CMD_FAST_FORWARD (C++ enumerator), 288
ESP_AVRC_PT_CMD_FAV_MENU (C++ enumerator), 286
ESP_AVRC_PT_CMD_FORWARD (C++ enumerator), 288
ESP_AVRC_PT_CMD_HELP (C++ enumerator), 287
ESP_AVRC_PT_CMD_INPUT_SEL (C++ enumerator), 287
ESP_AVRC_PT_CMD_LEFT (C++ enumerator), 286
ESP_AVRC_PT_CMD_LEFT_DOWN (C++ enumerator), 286
ESP_AVRC_PT_CMD_LEFT_UP (C++ enumerator), 286
ESP_AVRC_PT_CMD_MUTE (C++ enumerator), 288
ESP_AVRC_PT_CMD_PAGE_DOWN (C++ enumerator), 287
ESP_AVRC_PT_CMD_PAGE_UP (C++ enumerator), 287
ESP_AVRC_PT_CMD_PAUSE (C++ enumerator), 288
ESP_AVRC_PT_CMD_PLAY (C++ enumerator), 288
ESP_AVRC_PT_CMD_POWER (C++ enumerator), 288
ESP_AVRC_PT_CMD_PREV_CHAN (C++ enumerator), 287
ESP_AVRC_PT_CMD_RECORD (C++ enumerator), 288
ESP_AVRC_PT_CMD_REWIND (C++ enumerator), 288
ESP_AVRC_PT_CMD_RIGHT (C++ enumerator), 286
ESP_AVRC_PT_CMD_RIGHT_DOWN (C++ enumerator), 286
ESP_AVRC_PT_CMD_RIGHT_UP (C++ enumerator), 286
ESP_AVRC_PT_CMD_ROOT_MENU (C++ enumerator), 286
ESP_AVRC_PT_CMD_SELECT (C++ enumerator), 286
ESP_AVRC_PT_CMD_SETUP_MENU (C++ enumerator), 286
ESP_AVRC_PT_CMD_SOUND_SEL (C++ enumerator), 287
ESP_AVRC_PT_CMD_STATE_PRESSED (C++ enumerator), 289
ESP_AVRC_PT_CMD_STATE_RELEASED (C++ enumerator), 289
esp_avrc_pt_cmd_state_t (C++ enum), 289
ESP_AVRC_PT_CMD_STOP (C++ enumerator), 288
ESP_AVRC_PT_CMD_SUBPICT (C++ enumerator), 288
esp_avrc_pt_cmd_t (C++ enum), 286
ESP_AVRC_PT_CMD_UP (C++ enumerator), 286
ESP_AVRC_PT_CMD_VENDOR (C++ enumerator), 288
ESP_AVRC_PT_CMD_VOL_DOWN (C++ enumerator), 288
ESP_AVRC_PT_CMD_VOL_UP (C++ enumerator), 288
ESP_AVRC_RN_ADDRESSED_PLAYER_CHANGE (C++ enumerator), 291
ESP_AVRC_RN_APP_SETTING_CHANGE (C++ enumerator), 290
ESP_AVRC_RN_AVAILABLE_PLAYERS_CHANGE (C++ enumerator), 290

ESP_AVRC_RN_BATTERY_STATUS_CHANGE (C++ enumerator), 290
ESP_AVRC_RN_CAP_ALLOWED_EVT (C++ enumerator), 291
ESP_AVRC_RN_CAP_MAX (C++ enumerator), 291
ESP_AVRC_RN_CAP_SUPPORTED_EVT (C++ enumerator), 291
esp_avrc_rn_event_ids_t (C++ enum), 290
esp_avrc_rn_evt_bit_mask_operation (C++ function), 280
esp_avrc_rn_evt_cap_mask_t (C++ class), 284
esp_avrc_rn_evt_cap_mask_t::bits (C++ member), 285
esp_avrc_rn_evt_cap_t (C++ enum), 291
ESP_AVRC_RN_MAX_EVT (C++ enumerator), 291
ESP_AVRC_RN_NOW_PLAYING_CHANGE (C++ enumerator), 290
esp_avrc_rn_param_t (C++ union), 281
esp_avrc_rn_param_t::batt (C++ member), 281
esp_avrc_rn_param_t::elm_id (C++ member), 281
esp_avrc_rn_param_t::play_pos (C++ member), 281
esp_avrc_rn_param_t::playback (C++ member), 281
esp_avrc_rn_param_t::volume (C++ member), 281
ESP_AVRC_RN_PLAY_POS_CHANGED (C++ enumerator), 290
ESP_AVRC_RN_PLAY_STATUS_CHANGE (C++ enumerator), 290
ESP_AVRC_RN_RSP_CHANGED (C++ enumerator), 291
ESP_AVRC_RN_RSP_INTERIM (C++ enumerator), 291
esp_avrc_rn_rsp_t (C++ enum), 291
ESP_AVRC_RN_SYSTEM_STATUS_CHANGE (C++ enumerator), 290
ESP_AVRC_RN_TRACK_CHANGE (C++ enumerator), 290
ESP_AVRC_RN_TRACK_REACHED_END (C++ enumerator), 290
ESP_AVRC_RN_TRACK_REACHED_START (C++ enumerator), 290
ESP_AVRC_RN_UIDS_CHANGE (C++ enumerator), 291
ESP_AVRC_RN_VOLUME_CHANGE (C++ enumerator), 291
ESP_AVRC_RSP_ACCEPT (C++ enumerator), 292
ESP_AVRC_RSP_CHANGED (C++ enumerator), 292
ESP_AVRC_RSP_IMPL_STBL (C++ enumerator), 292
ESP_AVRC_RSP_IN_TRANS (C++ enumerator), 292
ESP_AVRC_RSP_INTERIM (C++ enumerator), 292
ESP_AVRC_RSP_NOT_IMPL (C++ enumerator), 292
ESP_AVRC_RSP_REJECT (C++ enumerator), 292
esp_avrc_rsp_t (C++ enum), 292
esp_avrc_set_app_value_param_t (C++ class), 285
esp_avrc_set_app_value_param_t::attr_id (C++ member), 285
esp_avrc_set_app_value_param_t::attr_val (C++ member), 285
esp_avrc_tg_cb_event_t (C++ enum), 289
esp_avrc_tg_cb_param_t (C++ union), 283
esp_avrc_tg_cb_param_t::avrc_tg_conn_stat_param (C++ class), 283
esp_avrc_tg_cb_param_t::avrc_tg_conn_stat_param:: (C++ member), 283
esp_avrc_tg_cb_param_t::avrc_tg_conn_stat_param:: (C++ member), 283
esp_avrc_tg_cb_param_t::avrc_tg_psth_cmd_param (C++ class), 283
esp_avrc_tg_cb_param_t::avrc_tg_psth_cmd_param::k (C++ member), 283
esp_avrc_tg_cb_param_t::avrc_tg_psth_cmd_param::k (C++ member), 283
esp_avrc_tg_cb_param_t::avrc_tg_reg_ntf_param (C++ class), 283
esp_avrc_tg_cb_param_t::avrc_tg_reg_ntf_param::ev (C++ member), 284
esp_avrc_tg_cb_param_t::avrc_tg_reg_ntf_param::ev (C++ member), 284
esp_avrc_tg_cb_param_t::avrc_tg_rmt_feats_param (C++ class), 284
esp_avrc_tg_cb_param_t::avrc_tg_rmt_feats_param:: (C++ member), 284
esp_avrc_tg_cb_param_t::avrc_tg_rmt_feats_param:: (C++ member), 284
esp_avrc_tg_cb_param_t::avrc_tg_rmt_feats_param:: (C++ member), 284
esp_avrc_tg_cb_param_t::avrc_tg_set_abs_vol_param (C++ class), 284
esp_avrc_tg_cb_param_t::avrc_tg_set_abs_vol_param (C++ member), 284
esp_avrc_tg_cb_param_t::avrc_tg_set_app_value_par (C++ class), 284
esp_avrc_tg_cb_param_t::avrc_tg_set_app_value_par (C++ member), 284
esp_avrc_tg_cb_param_t::avrc_tg_set_app_value_par (C++ member), 284
esp_avrc_tg_cb_param_t::conn_stat (C++ member), 283
esp_avrc_tg_cb_param_t::psth_cmd (C++ member), 283
esp_avrc_tg_cb_param_t::reg_ntf (C++ member), 283
esp_avrc_tg_cb_param_t::rmt_feats (C++ member), 283
esp_avrc_tg_cb_param_t::set_abs_vol (C++ member), 283
esp_avrc_tg_cb_param_t::set_app_value (C++ member), 283
esp_avrc_tg_cb_t (C++ type), 285

ESP_AVRC_TG_CONNECTION_STATE_EVT (C++ enumerator), 289
esp_avrc_tg_deinit (C++ function), 279
esp_avrc_tg_get_psth_cmd_filter (C++ function), 279
esp_avrc_tg_get_rn_evt_cap (C++ function), 280
esp_avrc_tg_init (C++ function), 278
ESP_AVRC_TG_PASSTHROUGH_CMD_EVT (C++ enumerator), 289
esp_avrc_tg_register_callback (C++ function), 278
ESP_AVRC_TG_REGISTER_NOTIFICATION_EVT (C++ enumerator), 290
ESP_AVRC_TG_REMOTE_FEATURES_EVT (C++ enumerator), 289
esp_avrc_tg_send_rn_rsp (C++ function), 280
ESP_AVRC_TG_SET_ABSOLUTE_VOLUME_CMD_EVT (C++ enumerator), 290
ESP_AVRC_TG_SET_PLAYER_APP_VALUE_EVT (C++ enumerator), 290
esp_avrc_tg_set_psth_cmd_filter (C++ function), 279
esp_avrc_tg_set_rn_evt_cap (C++ function), 280
ESP_AVRC_TRANS_LABEL_MAX (C 宏), 285
esp_base_mac_addr_get (C++ function), 1326
esp_base_mac_addr_set (C++ function), 1326
ESP_BD_ADDR_HEX (C 宏), 156
ESP_BD_ADDR_LEN (C 宏), 156
ESP_BD_ADDR_STR (C 宏), 156
esp_bd_addr_t (C++ type), 156
ESP_BLE_AD_MANUFACTURER_SPECIFIC_TYPE (C++ enumerator), 201
ESP_BLE_AD_TYPE_128SERVICE_DATA (C++ enumerator), 201
ESP_BLE_AD_TYPE_128SOL_SRV_UUID (C++ enumerator), 201
ESP_BLE_AD_TYPE_128SRV_CMPL (C++ enumerator), 201
ESP_BLE_AD_TYPE_128SRV_PART (C++ enumerator), 201
ESP_BLE_AD_TYPE_16SRV_CMPL (C++ enumerator), 201
ESP_BLE_AD_TYPE_16SRV_PART (C++ enumerator), 201
ESP_BLE_AD_TYPE_32SERVICE_DATA (C++ enumerator), 201
ESP_BLE_AD_TYPE_32SOL_SRV_UUID (C++ enumerator), 201
ESP_BLE_AD_TYPE_32SRV_CMPL (C++ enumerator), 201
ESP_BLE_AD_TYPE_32SRV_PART (C++ enumerator), 201
ESP_BLE_AD_TYPE_ADV_INT (C++ enumerator), 201
ESP_BLE_AD_TYPE_APPEARANCE (C++ enumerator), 201
ESP_BLE_AD_TYPE_CHAN_MAP_UPDATE (C++ enumerator), 201
ESP_BLE_AD_TYPE_DEV_CLASS (C++ enumerator), 201
ESP_BLE_AD_TYPE_FLAG (C++ enumerator), 201
ESP_BLE_AD_TYPE_INDOOR_POSITION (C++ enumerator), 201
ESP_BLE_AD_TYPE_INT_RANGE (C++ enumerator), 201
ESP_BLE_AD_TYPE_LE_DEV_ADDR (C++ enumerator), 201
ESP_BLE_AD_TYPE_LE_ROLE (C++ enumerator), 201
ESP_BLE_AD_TYPE_LE_SECURE_CONFIRM (C++ enumerator), 201
ESP_BLE_AD_TYPE_LE_SECURE_RANDOM (C++ enumerator), 201
ESP_BLE_AD_TYPE_LE_SUPPORT_FEATURE (C++ enumerator), 201
ESP_BLE_AD_TYPE_NAME_CMPL (C++ enumerator), 201
ESP_BLE_AD_TYPE_NAME_SHORT (C++ enumerator), 201
ESP_BLE_AD_TYPE_PUBLIC_TARGET (C++ enumerator), 201
ESP_BLE_AD_TYPE_RANDOM_TARGET (C++ enumerator), 201
ESP_BLE_AD_TYPE_SERVICE_DATA (C++ enumerator), 201
ESP_BLE_AD_TYPE_SM_OOB_FLAG (C++ enumerator), 201
ESP_BLE_AD_TYPE_SM_TK (C++ enumerator), 201
ESP_BLE_AD_TYPE_SOL_SRV_UUID (C++ enumerator), 201
ESP_BLE_AD_TYPE_SPAIR_C256 (C++ enumerator), 201
ESP_BLE_AD_TYPE_SPAIR_R256 (C++ enumerator), 201
ESP_BLE_AD_TYPE_TRANS_DISC_DATA (C++ enumerator), 201
ESP_BLE_AD_TYPE_TX_PWR (C++ enumerator), 201
ESP_BLE_AD_TYPE_URI (C++ enumerator), 201
esp_ble_addr_type_t (C++ enum), 159
esp_ble_adv_channel_t (C++ enum), 202
ESP_BLE_ADV_DATA_LEN_MAX (C 宏), 196
esp_ble_adv_data_t (C++ class), 185
esp_ble_adv_data_t::appearance (C++ member), 185
esp_ble_adv_data_t::flag (C++ member), 186
esp_ble_adv_data_t::include_name (C++ member), 185
esp_ble_adv_data_t::include_txpower (C++ member), 185
esp_ble_adv_data_t::manufacturer_len (C++ member), 185
esp_ble_adv_data_t::max_interval (C++

member), 185
esp_ble_adv_data_t::min_interval (*C++ member*), 185
esp_ble_adv_data_t::p_manufacturer_data (*C++ member*), 185
esp_ble_adv_data_t::p_service_data (*C++ member*), 186
esp_ble_adv_data_t::p_service_uuid (*C++ member*), 186
esp_ble_adv_data_t::service_data_len (*C++ member*), 186
esp_ble_adv_data_t::service_uuid_len (*C++ member*), 186
esp_ble_adv_data_t::set_scan_rsp (*C++ member*), 185
esp_ble_adv_data_type (*C++ enum*), 201
esp_ble_adv_filter_t (*C++ enum*), 202
ESP_BLE_ADV_FLAG_BREDR_NOT_SPT (*C 宏*), 194
ESP_BLE_ADV_FLAG_DMT_CONTROLLER_SPT (*C 宏*), 194
ESP_BLE_ADV_FLAG_DMT_HOST_SPT (*C 宏*), 194
ESP_BLE_ADV_FLAG_GEN_DISC (*C 宏*), 194
ESP_BLE_ADV_FLAG_LIMIT_DISC (*C 宏*), 194
ESP_BLE_ADV_FLAG_NON_LIMIT_DISC (*C 宏*), 194
esp_ble_adv_params_t (*C++ class*), 185
esp_ble_adv_params_t::adv_filter_policy (*C++ member*), 185
esp_ble_adv_params_t::adv_int_max (*C++ member*), 185
esp_ble_adv_params_t::adv_int_min (*C++ member*), 185
esp_ble_adv_params_t::adv_type (*C++ member*), 185
esp_ble_adv_params_t::channel_map (*C++ member*), 185
esp_ble_adv_params_t::own_addr_type (*C++ member*), 185
esp_ble_adv_params_t::peer_addr (*C++ member*), 185
esp_ble_adv_params_t::peer_addr_type (*C++ member*), 185
ESP_BLE_ADV_REPORT_EXT_ADV_IND (*C 宏*), 197
ESP_BLE_ADV_REPORT_EXT_DIRECT_ADV (*C 宏*), 197
ESP_BLE_ADV_REPORT_EXT_SCAN_IND (*C 宏*), 197
ESP_BLE_ADV_REPORT_EXT_SCAN_RSP (*C 宏*), 198
esp_ble_adv_type_t (*C++ enum*), 202
ESP_BLE_APP_ENC_KEY_SIZE (*C++ enumerator*), 203
ESP_BLE_APPEARANCE_BLOOD_PRESSURE_ARM (*C 宏*), 195
ESP_BLE_APPEARANCE_BLOOD_PRESSURE_WRIST (*C 宏*), 195
ESP_BLE_APPEARANCE_CYCLING_CADENCE (*C 宏*), 196
ESP_BLE_APPEARANCE_CYCLING_COMPUTER (*C 宏*), 196
ESP_BLE_APPEARANCE_CYCLING_POWER (*C 宏*), 196
ESP_BLE_APPEARANCE_CYCLING_SPEED (*C 宏*), 196
ESP_BLE_APPEARANCE_CYCLING_SPEED_CADENCE (*C 宏*), 196
ESP_BLE_APPEARANCE_GENERIC_BARCODE_SCANNER (*C 宏*), 195
ESP_BLE_APPEARANCE_GENERIC_BLOOD_PRESSURE (*C 宏*), 195
ESP_BLE_APPEARANCE_GENERIC_CLOCK (*C 宏*), 195
ESP_BLE_APPEARANCE_GENERIC_COMPUTER (*C 宏*), 195
ESP_BLE_APPEARANCE_GENERIC_CONTINUOUS_GLUCOSE_MON (*C 宏*), 196
ESP_BLE_APPEARANCE_GENERIC_CYCLING (*C 宏*), 196
ESP_BLE_APPEARANCE_GENERIC_DISPLAY (*C 宏*), 195
ESP_BLE_APPEARANCE_GENERIC_EYEGLASSES (*C 宏*), 195
ESP_BLE_APPEARANCE_GENERIC_GLUCOSE (*C 宏*), 196
ESP_BLE_APPEARANCE_GENERIC_HEART_RATE (*C 宏*), 195
ESP_BLE_APPEARANCE_GENERIC_HID (*C 宏*), 195
ESP_BLE_APPEARANCE_GENERIC_INSULIN_PUMP (*C 宏*), 196
ESP_BLE_APPEARANCE_GENERIC_KEYRING (*C 宏*), 195
ESP_BLE_APPEARANCE_GENERIC_MEDIA_PLAYER (*C 宏*), 195
ESP_BLE_APPEARANCE_GENERIC_MEDICATION_DELIVERY (*C 宏*), 196
ESP_BLE_APPEARANCE_GENERIC_OUTDOOR_SPORTS (*C 宏*), 196
ESP_BLE_APPEARANCE_GENERIC_PERSONAL_MOBILITY_DEVI (*C 宏*), 196
ESP_BLE_APPEARANCE_GENERIC_PHONE (*C 宏*), 195
ESP_BLE_APPEARANCE_GENERIC_PULSE_OXIMETER (*C 宏*), 196
ESP_BLE_APPEARANCE_GENERIC_REMOTE (*C 宏*), 195
ESP_BLE_APPEARANCE_GENERIC_TAG (*C 宏*), 195
ESP_BLE_APPEARANCE_GENERIC_THERMOMETER (*C 宏*), 195
ESP_BLE_APPEARANCE_GENERIC_WALKING (*C 宏*), 196
ESP_BLE_APPEARANCE_GENERIC_WATCH (*C 宏*), 195

ESP_BLE_APPEARANCE_GENERIC_WEIGHT (C 宏), 196
ESP_BLE_APPEARANCE_HEART_RATE_BELT (C 宏), 195
ESP_BLE_APPEARANCE_HID_BARCODE_SCANNER (C 宏), 196
ESP_BLE_APPEARANCE_HID_CARD_READER (C 宏), 196
ESP_BLE_APPEARANCE_HID_DIGITAL_PEN (C 宏), 196
ESP_BLE_APPEARANCE_HID_DIGITIZER_TABLET (C 宏), 196
ESP_BLE_APPEARANCE_HID_GAMEPAD (C 宏), 196
ESP_BLE_APPEARANCE_HID_JOYSTICK (C 宏), 195
ESP_BLE_APPEARANCE_HID_KEYBOARD (C 宏), 195
ESP_BLE_APPEARANCE_HID_MOUSE (C 宏), 195
ESP_BLE_APPEARANCE_INSULIN_PEN (C 宏), 196
ESP_BLE_APPEARANCE_INSULIN_PUMP_DURABLE_PUMP (C 宏), 196
ESP_BLE_APPEARANCE_INSULIN_PUMP_PATCH_PUMP (C 宏), 196
ESP_BLE_APPEARANCE_MOBILITY_SCOOTER (C 宏), 196
ESP_BLE_APPEARANCE_OUTDOOR_SPORTS_LOCATION (C 宏), 196
ESP_BLE_APPEARANCE_OUTDOOR_SPORTS_LOCATION_AND_NAV (C 宏), 196
ESP_BLE_APPEARANCE_OUTDOOR_SPORTS_LOCATION_POD (C 宏), 196
ESP_BLE_APPEARANCE_OUTDOOR_SPORTS_LOCATION_POD_AND_NAV (C 宏), 196
ESP_BLE_APPEARANCE_POWERED_WHEELCHAIR (C 宏), 196
ESP_BLE_APPEARANCE_PULSE_OXIMETER_FINGERTIP (C 宏), 196
ESP_BLE_APPEARANCE_PULSE_OXIMETER_WRIST (C 宏), 196
ESP_BLE_APPEARANCE_SPORTS_WATCH (C 宏), 195
ESP_BLE_APPEARANCE_THERMOMETER_EAR (C 宏), 195
ESP_BLE_APPEARANCE_UNKNOWN (C 宏), 195
ESP_BLE_APPEARANCE_WALKING_IN_SHOE (C 宏), 196
ESP_BLE_APPEARANCE_WALKING_ON_HIP (C 宏), 196
ESP_BLE_APPEARANCE_WALKING_ON_SHOE (C 宏), 196
esp_ble_auth_cmpl_t (C++ *class*), 189
esp_ble_auth_cmpl_t::addr_type (C++ *member*), 190
esp_ble_auth_cmpl_t::auth_mode (C++ *member*), 190
esp_ble_auth_cmpl_t::bd_addr (C++ *member*), 190
esp_ble_auth_cmpl_t::dev_type (C++ *member*), 190
esp_ble_auth_cmpl_t::fail_reason (C++ *member*), 190
esp_ble_auth_cmpl_t::key (C++ *member*), 190
esp_ble_auth_cmpl_t::key_present (C++ *member*), 190
esp_ble_auth_cmpl_t::key_type (C++ *member*), 190
esp_ble_auth_cmpl_t::success (C++ *member*), 190
esp_ble_auth_req_t (C++ *type*), 198
esp_ble_bond_dev_t (C++ *class*), 189
esp_ble_bond_dev_t::bd_addr (C++ *member*), 189
esp_ble_bond_dev_t::bond_key (C++ *member*), 189
esp_ble_bond_key_info_t (C++ *class*), 189
esp_ble_bond_key_info_t::key_mask (C++ *member*), 189
esp_ble_bond_key_info_t::pcsrk_key (C++ *member*), 189
esp_ble_bond_key_info_t::penc_key (C++ *member*), 189
esp_ble_bond_key_info_t::pid_key (C++ *member*), 189
esp_ble_confirm_reply (C++ *function*), 166
ESP_BLE_CONN_INT_MAX (C 宏), 155
ESP_BLE_CONN_INT_MIN (C 宏), 155
ESP_BLE_CONN_LATENCY_MAX (C 宏), 155
ESP_BLE_CONN_PARAM_UNDEF (C 宏), 155
ESP_BLE_CONN_SUP_TOUT_MAX (C 宏), 155
ESP_BLE_CONN_SUP_TOUT_MIN (C 宏), 155
esp_ble_conn_update_params_t (C++ *class*), 186
esp_ble_conn_update_params_t::bda (C++ *member*), 187
esp_ble_conn_update_params_t::latency (C++ *member*), 187
esp_ble_conn_update_params_t::max_int (C++ *member*), 187
esp_ble_conn_update_params_t::min_int (C++ *member*), 187
esp_ble_conn_update_params_t::timeout (C++ *member*), 187
ESP_BLE_CSR_KEY_MASK (C 宏), 156
esp_ble_duplicate_exceptional_info_type_t (C++ *enum*), 204
ESP_BLE_DUPLICATE_EXCEPTIONAL_LIST_ADD (C++ *enumerator*), 204
ESP_BLE_DUPLICATE_EXCEPTIONAL_LIST_CLEAN (C++ *enumerator*), 204
ESP_BLE_DUPLICATE_EXCEPTIONAL_LIST_REMOVE (C++ *enumerator*), 204
ESP_BLE_DUPLICATE_SCAN_EXCEPTIONAL_ADDR_LIST (C++ *enumerator*), 205

ESP_BLE_DUPLICATE_SCAN_EXCEPTIONAL_ALL_LIST (C++ enumerator), 205
ESP_BLE_DUPLICATE_SCAN_EXCEPTIONAL_INFO_ADV_ADDR (C++ enumerator), 204
ESP_BLE_DUPLICATE_SCAN_EXCEPTIONAL_INFO_MESH_BEACON_TYPE (C++ enumerator), 205
ESP_BLE_DUPLICATE_SCAN_EXCEPTIONAL_INFO_MESH_LINK_ID (C++ enumerator), 204
ESP_BLE_DUPLICATE_SCAN_EXCEPTIONAL_INFO_MESH_PROV_SRV_ADV (C++ enumerator), 205
ESP_BLE_DUPLICATE_SCAN_EXCEPTIONAL_INFO_MESH_PROXY_SRV_ADV (C++ enumerator), 205
ESP_BLE_DUPLICATE_SCAN_EXCEPTIONAL_MESH_BEACON_TYPE_LIST (C++ enumerator), 205
ESP_BLE_DUPLICATE_SCAN_EXCEPTIONAL_MESH_LINK_ID_LIST (C++ enumerator), 205
ESP_BLE_DUPLICATE_SCAN_EXCEPTIONAL_MESH_PROV_SRV_ADV_LIST (C++ enumerator), 205
ESP_BLE_DUPLICATE_SCAN_EXCEPTIONAL_MESH_PROXY_SRV_ADV_LIST (C++ enumerator), 205
ESP_BLE_ENC_KEY_MASK (C 宏), 156
ESP_BLE_EVT_CONN_ADV (C++ enumerator), 204
ESP_BLE_EVT_CONN_DIR_ADV (C++ enumerator), 204
ESP_BLE_EVT_DISC_ADV (C++ enumerator), 204
ESP_BLE_EVT_NON_CONN_ADV (C++ enumerator), 204
ESP_BLE_EVT_SCAN_RSP (C++ enumerator), 204
esp_ble_evt_type_t (C++ enum), 204
esp_ble_ext_adv_type_mask_t (C++ type), 198
esp_ble_ext_scan_cfg_mask_t (C++ type), 198
esp_ble_ext_scan_cfg_t (C++ class), 191
esp_ble_ext_scan_cfg_t::scan_interval (C++ member), 191
esp_ble_ext_scan_cfg_t::scan_type (C++ member), 191
esp_ble_ext_scan_cfg_t::scan_window (C++ member), 191
esp_ble_ext_scan_params_t (C++ class), 191
esp_ble_ext_scan_params_t::cfg_mask (C++ member), 191
esp_ble_ext_scan_params_t::coded_cfg (C++ member), 191
esp_ble_ext_scan_params_t::filter_policy (C++ member), 191
esp_ble_ext_scan_params_t::own_addr_type (C++ member), 191
esp_ble_ext_scan_params_t::scan_duplicate (C++ member), 191
esp_ble_ext_scan_params_t::uncoded_cfg (C++ member), 191
esp_ble_gap_add_duplicate_scan_exceptional_device (C++ function), 164
esp_ble_gap_adv_type_t (C++ type), 198
esp_ble_gap_all_phys_t (C++ type), 198
esp_ble_gap_cb_param_t (C++ union), 172
esp_ble_gap_cb_param_t::adv_data_cmpl (C++ member), 172
esp_ble_gap_cb_param_t::adv_data_raw_cmpl (C++ member), 172
esp_ble_gap_cb_param_t::adv_start_cmpl (C++ member), 172
esp_ble_gap_cb_param_t::adv_stop_cmpl (C++ member), 172
esp_ble_gap_cb_param_t::adv_terminate (C++ member), 174
esp_ble_gap_cb_param_t::ble_adv_data_cmpl_evt_par (C++ class), 174
esp_ble_gap_cb_param_t::ble_adv_data_cmpl_evt_par (C++ member), 174
esp_ble_gap_cb_param_t::ble_adv_data_raw_cmpl_evt (C++ class), 174
esp_ble_gap_cb_param_t::ble_adv_data_raw_cmpl_evt (C++ member), 175
esp_ble_gap_cb_param_t::ble_adv_start_cmpl_evt_pa (C++ class), 175
esp_ble_gap_cb_param_t::ble_adv_start_cmpl_evt_pa (C++ member), 175
esp_ble_gap_cb_param_t::ble_adv_stop_cmpl_evt_par (C++ class), 175
esp_ble_gap_cb_param_t::ble_adv_stop_cmpl_evt_par (C++ member), 175
esp_ble_gap_cb_param_t::ble_adv_terminate_param (C++ class), 175
esp_ble_gap_cb_param_t::ble_adv_terminate_param:: (C++ member), 175
esp_ble_gap_cb_param_t::ble_adv_terminate_param:: (C++ member), 175
esp_ble_gap_cb_param_t::ble_adv_terminate_param:: (C++ member), 175
esp_ble_gap_cb_param_t::ble_adv_terminate_param:: (C++ member), 175
esp_ble_gap_cb_param_t::ble_channel_sel_alg_param (C++ class), 175
esp_ble_gap_cb_param_t::ble_channel_sel_alg_param (C++ member), 175
esp_ble_gap_cb_param_t::ble_channel_sel_alg_param (C++ member), 175
esp_ble_gap_cb_param_t::ble_clear_bond_dev_cmpl_e (C++ class), 175
esp_ble_gap_cb_param_t::ble_clear_bond_dev_cmpl_e (C++ member), 175
esp_ble_gap_cb_param_t::ble_ext_adv_data_set_cmpl (C++ class), 175
esp_ble_gap_cb_param_t::ble_ext_adv_data_set_cmpl (C++ member), 176
esp_ble_gap_cb_param_t::ble_ext_adv_report_param (C++ class), 176
esp_ble_gap_cb_param_t::ble_ext_adv_report_param: (C++ member), 176
esp_ble_gap_cb_param_t::ble_ext_adv_scan_rsp_set_ (C++ class), 176
esp_ble_gap_cb_param_t::ble_ext_adv_scan_rsp_set_ (C++ member), 176

esp_ble_gap_cb_param_t::ble_ext_adv_set_rand_addr_cmpl_evt_param (C++ class), 176
esp_ble_gap_cb_param_t::ble_ext_adv_set_rand_addr_cmpl_evt_param::status (C++ member), 176
esp_ble_gap_cb_param_t::ble_ext_adv_set_remove_cmpl_evt_param (C++ class), 176
esp_ble_gap_cb_param_t::ble_ext_adv_set_remove_cmpl_evt_param::status (C++ member), 176
esp_ble_gap_cb_param_t::ble_ext_adv_set_terminate_evt_param (C++ class), 176
esp_ble_gap_cb_param_t::ble_ext_adv_set_terminate_evt_param::status (C++ member), 177
esp_ble_gap_cb_param_t::ble_ext_adv_start_cmpl_evt_param (C++ class), 177
esp_ble_gap_cb_param_t::ble_ext_adv_start_cmpl_evt_param::status (C++ member), 177
esp_ble_gap_cb_param_t::ble_ext_adv_stop_cmpl_evt_param (C++ class), 177
esp_ble_gap_cb_param_t::ble_ext_adv_stop_cmpl_evt_param::status (C++ member), 177
esp_ble_gap_cb_param_t::ble_ext_conn_params_set_cmpl_evt_param (C++ class), 177
esp_ble_gap_cb_param_t::ble_ext_conn_params_set_cmpl_evt_param::status (C++ member), 177
esp_ble_gap_cb_param_t::ble_ext_scan_start_cmpl_evt_param (C++ class), 177
esp_ble_gap_cb_param_t::ble_ext_scan_start_cmpl_evt_param::status (C++ member), 177
esp_ble_gap_cb_param_t::ble_ext_scan_stop_cmpl_evt_param (C++ class), 177
esp_ble_gap_cb_param_t::ble_ext_scan_stop_cmpl_evt_param::status (C++ member), 177
esp_ble_gap_cb_param_t::ble_get_bond_dev_cmpl_evt_param (C++ class), 177
esp_ble_gap_cb_param_t::ble_get_bond_dev_cmpl_evt_param::bond_dev (C++ member), 177
esp_ble_gap_cb_param_t::ble_get_bond_dev_cmpl_evt_param::dev_num (C++ member), 177
esp_ble_gap_cb_param_t::ble_get_bond_dev_cmpl_evt_param::status (C++ member), 177
esp_ble_gap_cb_param_t::ble_get_dev_name_cmpl_evt_param (C++ class), 178
esp_ble_gap_cb_param_t::ble_get_dev_name_cmpl_evt_param::name (C++ member), 178
esp_ble_gap_cb_param_t::ble_get_dev_name_cmpl_evt_param::status (C++ member), 178
esp_ble_gap_cb_param_t::ble_local_privacy_cmpl_evt_param (C++ class), 178
esp_ble_gap_cb_param_t::ble_local_privacy_cmpl_evt_param::status (C++ member), 178
esp_ble_gap_cb_param_t::ble_period_adv_add_dev_cmpl_evt_param (C++ class), 178
esp_ble_gap_cb_param_t::ble_period_adv_add_dev_cmpl_evt_param::status (C++ member), 178
esp_ble_gap_cb_param_t::ble_period_adv_clear_dev_cmpl_evt_param (C++ class), 178
esp_ble_gap_cb_param_t::ble_period_adv_clear_dev_cmpl_evt_param::status (C++ member), 178
esp_ble_gap_cb_param_t::ble_period_adv_create_sync_cmpl_evt_param (C++ class), 178
esp_ble_gap_cb_param_t::ble_period_adv_create_sync_cmpl_evt_param::status (C++ member), 178
esp_ble_gap_cb_param_t::ble_period_adv_remove_dev_cmpl_evt_param (C++ class), 178
esp_ble_gap_cb_param_t::ble_period_adv_remove_dev_cmpl_evt_param::status (C++ member), 178
esp_ble_gap_cb_param_t::ble_period_adv_sync_cancel_cmpl_evt_param (C++ class), 178
esp_ble_gap_cb_param_t::ble_period_adv_sync_cancel_cmpl_evt_param::status (C++ member), 179
esp_ble_gap_cb_param_t::ble_period_adv_sync_terminate_evt_param (C++ class), 179
esp_ble_gap_cb_param_t::ble_period_adv_sync_terminate_evt_param::status (C++ member), 179
esp_ble_gap_cb_param_t::ble_periodic_adv_data_set_cmpl_evt_param (C++ class), 179
esp_ble_gap_cb_param_t::ble_periodic_adv_data_set_cmpl_evt_param::status (C++ member), 179
esp_ble_gap_cb_param_t::ble_periodic_adv_report_params_cmpl_evt_param (C++ class), 179
esp_ble_gap_cb_param_t::ble_periodic_adv_report_params_cmpl_evt_param::status (C++ member), 179
esp_ble_gap_cb_param_t::ble_periodic_adv_set_params_cmpl_evt_param (C++ class), 179
esp_ble_gap_cb_param_t::ble_periodic_adv_set_params_cmpl_evt_param::status (C++ member), 179
esp_ble_gap_cb_param_t::ble_periodic_adv_start_cmpl_evt_param (C++ class), 179
esp_ble_gap_cb_param_t::ble_periodic_adv_start_cmpl_evt_param::status (C++ member), 179
esp_ble_gap_cb_param_t::ble_periodic_adv_stop_cmpl_evt_param (C++ class), 179
esp_ble_gap_cb_param_t::ble_periodic_adv_stop_cmpl_evt_param::bond_dev (C++ member), 179
esp_ble_gap_cb_param_t::ble_periodic_adv_sync_estab_evt_param::adv_addr_type (C++ member), 179
esp_ble_gap_cb_param_t::ble_periodic_adv_sync_estab_evt_param::status (C++ member), 180
esp_ble_gap_cb_param_t::ble_periodic_adv_sync_estab_evt_param::sync_handle (C++ member), 180
esp_ble_gap_cb_param_t::ble_periodic_adv_sync_estab_evt_param::addr (C++ member), 180
esp_ble_gap_cb_param_t::ble_periodic_adv_sync_estab_evt_param::phy (C++ member), 180
esp_ble_gap_cb_param_t::ble_periodic_adv_sync_estab_evt_param::interval (C++ member), 180
esp_ble_gap_cb_param_t::ble_periodic_adv_sync_estab_evt_param::clock_accuracy (C++ member), 180

esp_ble_gap_cb_param_t::ble_periodic_adv_sync_lost_cb_param (C++ class), 180
esp_ble_gap_cb_param_t::ble_periodic_adv_sync_lost_cb_param::sync_handle (C++ member), 180
esp_ble_gap_cb_param_t::ble_phy_update_cmpl_param (C++ class), 180
esp_ble_gap_cb_param_t::ble_phy_update_cmpl_param::conn_handle (C++ member), 180
esp_ble_gap_cb_param_t::ble_phy_update_cmpl_param::rx_phy (C++ member), 180
esp_ble_gap_cb_param_t::ble_phy_update_cmpl_param::status (C++ member), 180
esp_ble_gap_cb_param_t::ble_phy_update_cmpl_param::tx_phy (C++ member), 180
esp_ble_gap_cb_param_t::ble_pkt_data_length_cmpl_param (C++ class), 180
esp_ble_gap_cb_param_t::ble_pkt_data_length_cmpl_param::params (C++ member), 180
esp_ble_gap_cb_param_t::ble_pkt_data_length_cmpl_param::status (C++ member), 180
esp_ble_gap_cb_param_t::ble_read_phy_cmpl_evt_param (C++ class), 180
esp_ble_gap_cb_param_t::ble_read_phy_cmpl_evt_param::conn_handle (C++ member), 181
esp_ble_gap_cb_param_t::ble_read_phy_cmpl_evt_param::rx_phy (C++ member), 181
esp_ble_gap_cb_param_t::ble_read_phy_cmpl_evt_param::status (C++ member), 181
esp_ble_gap_cb_param_t::ble_read_phy_cmpl_evt_param::tx_phy (C++ member), 181
esp_ble_gap_cb_param_t::ble_read_rssi_cmpl_evt_param (C++ class), 181
esp_ble_gap_cb_param_t::ble_read_rssi_cmpl_evt_param::remote_addr (C++ member), 181
esp_ble_gap_cb_param_t::ble_read_rssi_cmpl_evt_param::rssi (C++ member), 181
esp_ble_gap_cb_param_t::ble_read_rssi_cmpl_evt_param::status (C++ member), 181
esp_ble_gap_cb_param_t::ble_remove_bond_dev_cmpl_evt_param (C++ class), 181
esp_ble_gap_cb_param_t::ble_remove_bond_dev_cmpl_evt_param::bd_addr (C++ member), 181
esp_ble_gap_cb_param_t::ble_remove_bond_dev_cmpl_evt_param::status (C++ member), 181
esp_ble_gap_cb_param_t::ble_scan_param_cmpl_evt_param (C++ class), 181
esp_ble_gap_cb_param_t::ble_scan_param_cmpl_evt_param::status (C++ member), 181
esp_ble_gap_cb_param_t::ble_scan_req_received_evt_param (C++ class), 181
esp_ble_gap_cb_param_t::ble_scan_req_received_evt_param::adv_addr_type (C++ member), 182
esp_ble_gap_cb_param_t::ble_scan_req_received_evt_param::scan_addr (C++ member), 182
esp_ble_gap_cb_param_t::ble_scan_req_received_evt_param::scan_addr_type (C++ member), 182
esp_ble_gap_cb_param_t::ble_scan_result_evt_param (C++ class), 182
esp_ble_gap_cb_param_t::ble_scan_result_evt_param::adv_data_len (C++ member), 182
esp_ble_gap_cb_param_t::ble_scan_result_evt_param::adv_data_len::adv_data_len (C++ member), 182
esp_ble_gap_cb_param_t::ble_scan_result_evt_param::adv_data_len::scan_rsp_len (C++ member), 182
esp_ble_gap_cb_param_t::ble_scan_result_evt_param::adv_int (C++ member), 182
esp_ble_gap_cb_param_t::ble_scan_result_evt_param::bda (C++ member), 182
esp_ble_gap_cb_param_t::ble_scan_result_evt_param::ble_addr_type (C++ member), 182
esp_ble_gap_cb_param_t::ble_scan_result_evt_param::ble_evt_type (C++ member), 182
esp_ble_gap_cb_param_t::ble_scan_result_evt_param::dev_type (C++ member), 182
esp_ble_gap_cb_param_t::ble_scan_result_evt_param::flag (C++ member), 182
esp_ble_gap_cb_param_t::ble_scan_result_evt_param::num_resps (C++ member), 182
esp_ble_gap_cb_param_t::ble_scan_result_evt_param::num_resps::num_dis (C++ member), 182
esp_ble_gap_cb_param_t::ble_scan_result_evt_param::num_resps::num_resps (C++ member), 182
esp_ble_gap_cb_param_t::ble_scan_result_evt_param::rssi (C++ member), 182
esp_ble_gap_cb_param_t::ble_scan_result_evt_param::search_evt (C++ member), 182
esp_ble_gap_cb_param_t::ble_scan_result_evt_param::status (C++ member), 182
esp_ble_gap_cb_param_t::ble_scan_rsp_data_cmpl_evt_param (C++ class), 182
esp_ble_gap_cb_param_t::ble_scan_rsp_data_cmpl_evt_param::status (C++ member), 182
esp_ble_gap_cb_param_t::ble_scan_rsp_data_raw_cmpl_evt_param (C++ class), 182
esp_ble_gap_cb_param_t::ble_scan_rsp_data_raw_cmpl_evt_param::status (C++ member), 183
esp_ble_gap_cb_param_t::ble_scan_start_cmpl_evt_param (C++ class), 183
esp_ble_gap_cb_param_t::ble_scan_start_cmpl_evt_param::status (C++ member), 183
esp_ble_gap_cb_param_t::ble_scan_stop_cmpl_evt_param (C++ class), 183
esp_ble_gap_cb_param_t::ble_scan_stop_cmpl_evt_param::status (C++ member), 183
esp_ble_gap_cb_param_t::ble_security (C++ member), 172
esp_ble_gap_cb_param_t::ble_set_channels_evt_param (C++ class), 183
esp_ble_gap_cb_param_t::ble_set_channels_evt_param::status (C++ member), 183
esp_ble_gap_cb_param_t::ble_set_ext_scan_params_cmpl_param (C++ class), 183
esp_ble_gap_cb_param_t::ble_set_ext_scan_params_cmpl_param::status (C++ member), 183
esp_ble_gap_cb_param_t::ble_set_perf_def_phy_cmpl_param (C++ class), 183
esp_ble_gap_cb_param_t::ble_set_perf_def_phy_cmpl_param::status (C++ member), 183
esp_ble_gap_cb_param_t::ble_set_perf_phy_cmpl_evt_param (C++ class), 183

esp_ble_gap_cb_param_t::ble_set_perf_phy_cmpl_evt_param::status (C++ member), 183
esp_ble_gap_cb_param_t::ble_set_rand_cmpl_evt_param (C++ class), 183
esp_ble_gap_cb_param_t::ble_set_rand_cmpl_evt_param::status (C++ member), 184
esp_ble_gap_cb_param_t::ble_update_conn_param_evt_param (C++ class), 184
esp_ble_gap_cb_param_t::ble_update_conn_param_evt_param::bda (C++ member), 184
esp_ble_gap_cb_param_t::ble_update_conn_param_evt_param::conn_int (C++ member), 184
esp_ble_gap_cb_param_t::ble_update_conn_param_evt_param::latency (C++ member), 184
esp_ble_gap_cb_param_t::ble_update_conn_param_evt_param::max_int (C++ member), 184
esp_ble_gap_cb_param_t::ble_update_conn_param_evt_param::min_int (C++ member), 184
esp_ble_gap_cb_param_t::ble_update_conn_param_evt_param::status (C++ member), 184
esp_ble_gap_cb_param_t::ble_update_conn_param_evt_param::timeout (C++ member), 184
esp_ble_gap_cb_param_t::ble_update_duplicate_exceptional_list_cmpl_evt_param (C++ class), 184
esp_ble_gap_cb_param_t::ble_update_duplicate_exceptional_list_cmpl_evt_param::device_inf (C++ member), 184
esp_ble_gap_cb_param_t::ble_update_duplicate_exceptional_list_cmpl_evt_param::length (C++ member), 184
esp_ble_gap_cb_param_t::ble_update_duplicate_exceptional_list_cmpl_evt_param::status (C++ member), 184
esp_ble_gap_cb_param_t::ble_update_duplicate_exceptional_list_cmpl_evt_param::subcode (C++ member), 184
esp_ble_gap_cb_param_t::ble_update_white_list_cmpl_evt_param (C++ class), 184
esp_ble_gap_cb_param_t::ble_update_white_list_cmpl_evt_param::status (C++ member), 184
esp_ble_gap_cb_param_t::ble_update_white_list_cmpl_evt_param::wlpropriation (C++ member), 184
esp_ble_gap_cb_param_t::channel_sel_alg (C++ member), 174
esp_ble_gap_cb_param_t::clear_bond_dev_cmpl (C++ member), 173
esp_ble_gap_cb_param_t::ext_adv_clear (C++ member), 173
esp_ble_gap_cb_param_t::ext_adv_data_set (C++ member), 173
esp_ble_gap_cb_param_t::ext_adv_remove (C++ member), 173
esp_ble_gap_cb_param_t::ext_adv_report (C++ member), 174
esp_ble_gap_cb_param_t::ext_adv_set_params (C++ member), 173
esp_ble_gap_cb_param_t::ext_adv_set_rand_addr (C++ member), 173
esp_ble_gap_cb_param_t::ext_adv_start (C++ member), 173
esp_ble_gap_cb_param_t::ext_adv_stop (C++ member), 173
esp_ble_gap_cb_param_t::ext_conn_params_set (C++ member), 174
esp_ble_gap_cb_param_t::ext_scan_start (C++ member), 174
esp_ble_gap_cb_param_t::ext_scan_stop (C++ member), 174
esp_ble_gap_cb_param_t::get_bond_dev_cmpl (C++ member), 173
esp_ble_gap_cb_param_t::get_dev_name_cmpl (C++ member), 172
esp_ble_gap_cb_param_t::local_privacy_cmpl (C++ member), 173
esp_ble_gap_cb_param_t::period_adv_add_dev (C++ member), 174
esp_ble_gap_cb_param_t::period_adv_clear_dev (C++ member), 174
esp_ble_gap_cb_param_t::period_adv_create_sync (C++ member), 174
esp_ble_gap_cb_param_t::period_adv_data_set (C++ member), 173
esp_ble_gap_cb_param_t::period_adv_remove_dev (C++ member), 174
esp_ble_gap_cb_param_t::period_adv_report (C++ member), 174
esp_ble_gap_cb_param_t::period_adv_sync_lost (C++ member), 174
esp_ble_gap_cb_param_t::period_adv_set_params (C++ member), 173
esp_ble_gap_cb_param_t::phy_update (C++ member), 174
esp_ble_gap_cb_param_t::pkt_data_lenth_cmpl (C++ member), 173
esp_ble_gap_cb_param_t::read_phy (C++ member), 173
esp_ble_gap_cb_param_t::read_rssi_cmpl (C++ member), 173
esp_ble_gap_cb_param_t::remove_bond_dev_cmpl (C++ member), 173
esp_ble_gap_cb_param_t::scan_param_cmpl (C++ member), 172
esp_ble_gap_cb_param_t::scan_req_received (C++ member), 174
esp_ble_gap_cb_param_t::scan_rsp_data_cmpl (C++ member), 172
esp_ble_gap_cb_param_t::scan_rsp_data_raw_cmpl (C++ member), 172
esp_ble_gap_cb_param_t::scan_rsp_set (C++ member), 173

esp_ble_gap_cb_param_t::scan_rst (C++ member), 172
esp_ble_gap_cb_param_t::scan_start_cmpl (C++ member), 172
esp_ble_gap_cb_param_t::scan_stop_cmpl (C++ member), 172
esp_ble_gap_cb_param_t::set_ext_scan_params (C++ member), 174
esp_ble_gap_cb_param_t::set_perf_def_phy (C++ member), 173
esp_ble_gap_cb_param_t::set_perf_phy (C++ member), 173
esp_ble_gap_cb_param_t::set_rand_addr_cmpl (C++ member), 172
esp_ble_gap_cb_param_t::update_conn_params (C++ member), 172
esp_ble_gap_cb_param_t::update_duplicate_exceptional_list_cmpl (C++ member), 173
esp_ble_gap_cb_param_t::update_whitelist_cmpl (C++ member), 173
esp_ble_gap_clean_duplicate_scan_exceptional_list (C++ function), 165
esp_ble_gap_clear_rand_addr (C++ function), 162
esp_ble_gap_clear_whitelist (C++ function), 163
esp_ble_gap_config_adv_data (C++ function), 161
esp_ble_gap_config_adv_data_raw (C++ function), 164
esp_ble_gap_config_ext_adv_data_raw (C++ function), 168
esp_ble_gap_config_ext_scan_rsp_data_raw (C++ function), 168
esp_ble_gap_config_local_icon (C++ function), 162
esp_ble_gap_config_local_privacy (C++ function), 162
esp_ble_gap_config_periodic_adv_data_raw (C++ function), 169
esp_ble_gap_config_scan_rsp_data_raw (C++ function), 164
esp_ble_gap_conn_params_t (C++ class), 191
esp_ble_gap_conn_params_t::interval_max (C++ member), 191
esp_ble_gap_conn_params_t::interval_min (C++ member), 191
esp_ble_gap_conn_params_t::latency (C++ member), 192
esp_ble_gap_conn_params_t::max_ce_len (C++ member), 192
esp_ble_gap_conn_params_t::min_ce_len (C++ member), 192
esp_ble_gap_conn_params_t::scan_interval (C++ member), 191
esp_ble_gap_conn_params_t::scan_window (C++ member), 191
esp_ble_gap_conn_params_t::supervision_timeout (C++ member), 192
esp_ble_gap_disconnect (C++ function), 166
ESP_BLE_GAP_EXT_ADV_DATA_COMPLETE (C 宏), 197
ESP_BLE_GAP_EXT_ADV_DATA_INCOMPLETE (C 宏), 197
esp_ble_gap_ext_adv_data_status_t (C++ type), 198
ESP_BLE_GAP_EXT_ADV_DATA_TRUNCATED (C 宏), 197
esp_ble_gap_ext_adv_params_t (C++ class), 190
esp_ble_gap_ext_adv_params_t::channel_map (C++ member), 190
esp_ble_gap_ext_adv_params_t::filter_policy (C++ member), 190
esp_ble_gap_ext_adv_params_t::interval_max (C++ member), 190
esp_ble_gap_ext_adv_params_t::interval_min (C++ member), 190
esp_ble_gap_ext_adv_params_t::max_skip (C++ member), 191
esp_ble_gap_ext_adv_params_t::own_addr_type (C++ member), 190
esp_ble_gap_ext_adv_params_t::peer_addr (C++ member), 190
esp_ble_gap_ext_adv_params_t::peer_addr_type (C++ member), 190
esp_ble_gap_ext_adv_params_t::primary_phy (C++ member), 190
esp_ble_gap_ext_adv_params_t::scan_req_notif (C++ member), 191
esp_ble_gap_ext_adv_params_t::secondary_phy (C++ member), 191
esp_ble_gap_ext_adv_params_t::sid (C++ member), 191
esp_ble_gap_ext_adv_params_t::tx_power (C++ member), 190
esp_ble_gap_ext_adv_params_t::type (C++ member), 190
esp_ble_gap_ext_adv_reprot_t (C++ class), 193
esp_ble_gap_ext_adv_reprot_t::addr (C++ member), 193
esp_ble_gap_ext_adv_reprot_t::addr_type (C++ member), 193
esp_ble_gap_ext_adv_reprot_t::adv_data (C++ member), 193
esp_ble_gap_ext_adv_reprot_t::adv_data_len (C++ member), 193
esp_ble_gap_ext_adv_reprot_t::data_status (C++ member), 193
esp_ble_gap_ext_adv_reprot_t::dir_addr (C++ member), 193
esp_ble_gap_ext_adv_reprot_t::dir_addr_type (C++ member), 193
esp_ble_gap_ext_adv_reprot_t::event_type (C++ member), 193

esp_ble_gap_ext_adv_reprot_t::per_adv_interval (C++ member), 193
esp_ble_gap_ext_adv_reprot_t::primary_phy (C++ member), 193
esp_ble_gap_ext_adv_reprot_t::rssi (C++ member), 193
esp_ble_gap_ext_adv_reprot_t::secondly_phy (C++ member), 193
esp_ble_gap_ext_adv_reprot_t::sid (C++ member), 193
esp_ble_gap_ext_adv_reprot_t::tx_power (C++ member), 193
esp_ble_gap_ext_adv_set_clear (C++ function), 169
esp_ble_gap_ext_adv_set_params (C++ function), 168
esp_ble_gap_ext_adv_set_rand_addr (C++ function), 168
esp_ble_gap_ext_adv_set_remove (C++ function), 169
esp_ble_gap_ext_adv_start (C++ function), 168
esp_ble_gap_ext_adv_stop (C++ function), 169
esp_ble_gap_ext_adv_t (C++ class), 192
esp_ble_gap_ext_adv_t::duration (C++ member), 192
esp_ble_gap_ext_adv_t::instance (C++ member), 192
esp_ble_gap_ext_adv_t::max_events (C++ member), 192
ESP_BLE_GAP_EXT_SCAN_CFG_CODE_MASK (C 宏), 197
ESP_BLE_GAP_EXT_SCAN_CFG_UNCODE_MASK (C 宏), 197
esp_ble_gap_get_device_name (C++ function), 163
esp_ble_gap_get_local_used_addr (C++ function), 164
esp_ble_gap_get_whitelist_size (C++ function), 163
ESP_BLE_GAP_NO_PREFER_RECEIVE_PHY (C 宏), 197
ESP_BLE_GAP_NO_PREFER_TRANSMIT_PHY (C 宏), 197
esp_ble_gap_periodic_adv_add_dev_to_list (C++ function), 170
esp_ble_gap_periodic_adv_clear_dev (C++ function), 171
esp_ble_gap_periodic_adv_create_sync (C++ function), 170
esp_ble_gap_periodic_adv_params_t (C++ class), 192
esp_ble_gap_periodic_adv_params_t::interval_max (C++ member), 192
esp_ble_gap_periodic_adv_params_t::interval_min (C++ member), 192
esp_ble_gap_periodic_adv_params_t::properties (C++ member), 192
esp_ble_gap_periodic_adv_remove_dev_from_list (C++ function), 170
esp_ble_gap_periodic_adv_report_t (C++ class), 193
esp_ble_gap_periodic_adv_report_t::data (C++ member), 194
esp_ble_gap_periodic_adv_report_t::data_length (C++ member), 194
esp_ble_gap_periodic_adv_report_t::data_status (C++ member), 193
esp_ble_gap_periodic_adv_report_t::rssi (C++ member), 193
esp_ble_gap_periodic_adv_report_t::sync_handle (C++ member), 193
esp_ble_gap_periodic_adv_report_t::tx_power (C++ member), 193
esp_ble_gap_periodic_adv_set_params (C++ function), 169
esp_ble_gap_periodic_adv_start (C++ function), 169
esp_ble_gap_periodic_adv_stop (C++ function), 169
esp_ble_gap_periodic_adv_sync_cancel (C++ function), 170
esp_ble_gap_periodic_adv_sync_estab_t (C++ class), 194
esp_ble_gap_periodic_adv_sync_estab_t::addr_type (C++ member), 194
esp_ble_gap_periodic_adv_sync_estab_t::adv_addr (C++ member), 194
esp_ble_gap_periodic_adv_sync_estab_t::adv_clk_ac (C++ member), 194
esp_ble_gap_periodic_adv_sync_estab_t::adv_phy (C++ member), 194
esp_ble_gap_periodic_adv_sync_estab_t::period_adv (C++ member), 194
esp_ble_gap_periodic_adv_sync_estab_t::sid (C++ member), 194
esp_ble_gap_periodic_adv_sync_estab_t::status (C++ member), 194
esp_ble_gap_periodic_adv_sync_estab_t::sync_handl (C++ member), 194
esp_ble_gap_periodic_adv_sync_params_t (C++ class), 192
esp_ble_gap_periodic_adv_sync_params_t::addr (C++ member), 192
esp_ble_gap_periodic_adv_sync_params_t::addr_type (C++ member), 192
esp_ble_gap_periodic_adv_sync_params_t::filter_po (C++ member), 192
esp_ble_gap_periodic_adv_sync_params_t::sid (C++ member), 192
esp_ble_gap_periodic_adv_sync_params_t::skip (C++ member), 192
esp_ble_gap_periodic_adv_sync_params_t::sync_time (C++ member), 192
esp_ble_gap_periodic_adv_sync_terminate

(C++ function), 170
ESP_BLE_GAP_PHY_1M (C 宏), 197
ESP_BLE_GAP_PHY_1M_PREF_MASK (C 宏), 197
ESP_BLE_GAP_PHY_2M (C 宏), 197
ESP_BLE_GAP_PHY_2M_PREF_MASK (C 宏), 197
ESP_BLE_GAP_PHY_CODED (C 宏), 197
ESP_BLE_GAP_PHY_CODED_PREF_MASK (C 宏), 197
esp_ble_gap_phy_mask_t (C++ type), 198
ESP_BLE_GAP_PHY_OPTIONS_NO_PREF (C 宏), 197
ESP_BLE_GAP_PHY_OPTIONS_PREF_S2_CODING (C 宏), 197
ESP_BLE_GAP_PHY_OPTIONS_PREF_S8_CODING (C 宏), 197
esp_ble_gap_phy_t (C++ type), 198
esp_ble_gap_prefer_ext_connect_params_set (C++ function), 171
esp_ble_gap_prefer_phy_options_t (C++ type), 198
ESP_BLE_GAP_PRI_PHY_1M (C 宏), 197
ESP_BLE_GAP_PRI_PHY_CODED (C 宏), 197
esp_ble_gap_pri_phy_t (C++ type), 198
esp_ble_gap_read_phy (C++ function), 167
esp_ble_gap_read_rssi (C++ function), 164
esp_ble_gap_register_callback (C++ function), 161
esp_ble_gap_remove_duplicate_scan_exceptional_device_list (C++ function), 165
esp_ble_gap_security_rsp (C++ function), 165
esp_ble_gap_set_device_name (C++ function), 163
ESP_BLE_GAP_SET_EXT_ADV_PROP_ANON_ADV (C 宏), 197
ESP_BLE_GAP_SET_EXT_ADV_PROP_CONNECTABLE (C 宏), 197
ESP_BLE_GAP_SET_EXT_ADV_PROP_DIRECTED (C 宏), 197
ESP_BLE_GAP_SET_EXT_ADV_PROP_HD_DIRECTED (C 宏), 197
ESP_BLE_GAP_SET_EXT_ADV_PROP_INCLUDE_TX_PWR (C 宏), 197
ESP_BLE_GAP_SET_EXT_ADV_PROP_LEGACY (C 宏), 197
ESP_BLE_GAP_SET_EXT_ADV_PROP_LEGACY_HD_DIR (C 宏), 197
ESP_BLE_GAP_SET_EXT_ADV_PROP_LEGACY_IND (C 宏), 197
ESP_BLE_GAP_SET_EXT_ADV_PROP_LEGACY_LD_DIR (C 宏), 197
ESP_BLE_GAP_SET_EXT_ADV_PROP_LEGACY_NONCONN (C 宏), 197
ESP_BLE_GAP_SET_EXT_ADV_PROP_LEGACY_SCAN (C 宏), 197
ESP_BLE_GAP_SET_EXT_ADV_PROP_MASK (C 宏), 197
ESP_BLE_GAP_SET_EXT_ADV_PROP_NONCONN_NONSCANNABLE_UNDIRECTED (C 宏), 197
ESP_BLE_GAP_SET_EXT_ADV_PROP_SCANNABLE (C 宏), 197
esp_ble_gap_set_ext_scan_params (C++ function), 170
esp_ble_gap_set_pkt_data_len (C++ function), 162
esp_ble_gap_set_prefer_conn_params (C++ function), 163
esp_ble_gap_set_prefered_default_phy (C++ function), 167
esp_ble_gap_set_prefered_phy (C++ function), 167
esp_ble_gap_set_rand_addr (C++ function), 162
esp_ble_gap_set_scan_params (C++ function), 161
esp_ble_gap_set_security_param (C++ function), 165
esp_ble_gap_start_advertising (C++ function), 161
esp_ble_gap_start_ext_scan (C++ function), 170
esp_ble_gap_start_scanning (C++ function), 161
esp_ble_gap_stop_advertising (C++ function), 162
esp_ble_gap_stop_ext_scan (C++ function), 170
esp_ble_gap_stop_scanning (C++ function), 161
ESP_BLE_GAP_SYNC_POLICY_BY_ADV_INFO (C 宏), 197
ESP_BLE_GAP_SYNC_POLICY_BY_PERIODIC_LIST (C 宏), 197
esp_ble_gap_sync_t (C++ type), 198
esp_ble_gap_update_conn_params (C++ function), 162
esp_ble_gap_update_whitelist (C++ function), 163
esp_ble_gattc_app_register (C++ function), 228
esp_ble_gattc_app_unregister (C++ function), 228
esp_ble_gattc_aux_open (C++ function), 229
esp_ble_gattc_cache_assoc (C++ function), 235
esp_ble_gattc_cache_clean (C++ function), 236
esp_ble_gattc_cache_get_addr_list (C++ function), 235
esp_ble_gattc_cache_refresh (C++ function), 235
esp_ble_gattc_cb_param_t (C++ union), 236
esp_ble_gattc_cb_param_t::cfg_mtu (C++ member), 236
esp_ble_gattc_cb_param_t::close (C++ member), 236

esp_ble_gattc_cb_param_t::congest (C++ member), 236
esp_ble_gattc_cb_param_t::connect (C++ member), 236
esp_ble_gattc_cb_param_t::dis_srvc_cmpl (C++ member), 237
esp_ble_gattc_cb_param_t::disconnect (C++ member), 236
esp_ble_gattc_cb_param_t::exec_cmpl (C++ member), 236
esp_ble_gattc_cb_param_t::gattc_cfg_mtu_evt_param (C++ class), 237
esp_ble_gattc_cb_param_t::gattc_cfg_mtu_evt_param::conn_id (C++ member), 237
esp_ble_gattc_cb_param_t::gattc_cfg_mtu_evt_param::mtu (C++ member), 237
esp_ble_gattc_cb_param_t::gattc_cfg_mtu_evt_param::status (C++ member), 237
esp_ble_gattc_cb_param_t::gattc_close_evt_param (C++ class), 237
esp_ble_gattc_cb_param_t::gattc_close_evt_param::conn_id (C++ member), 237
esp_ble_gattc_cb_param_t::gattc_close_evt_param::reason (C++ member), 237
esp_ble_gattc_cb_param_t::gattc_close_evt_param::remote_bda (C++ member), 237
esp_ble_gattc_cb_param_t::gattc_close_evt_param::status (C++ member), 237
esp_ble_gattc_cb_param_t::gattc_congest_evt_param (C++ class), 237
esp_ble_gattc_cb_param_t::gattc_congest_evt_param::conn_id (C++ member), 237
esp_ble_gattc_cb_param_t::gattc_congest_evt_param::congested (C++ member), 237
esp_ble_gattc_cb_param_t::gattc_connect_evt_param (C++ class), 237
esp_ble_gattc_cb_param_t::gattc_connect_evt_param::conn_id (C++ member), 238
esp_ble_gattc_cb_param_t::gattc_connect_evt_param::link_role (C++ member), 238
esp_ble_gattc_cb_param_t::gattc_connect_evt_param::remote_bda (C++ member), 238
esp_ble_gattc_cb_param_t::gattc_dis_srvc_cmpl_evt_param (C++ class), 238
esp_ble_gattc_cb_param_t::gattc_dis_srvc_cmpl_evt_param::conn_id (C++ member), 238
esp_ble_gattc_cb_param_t::gattc_dis_srvc_cmpl_evt_param::status (C++ member), 238
esp_ble_gattc_cb_param_t::gattc_disconnect_evt_param (C++ class), 238
esp_ble_gattc_cb_param_t::gattc_disconnect_evt_param::conn_id (C++ member), 238
esp_ble_gattc_cb_param_t::gattc_disconnect_evt_param::reason (C++ member), 238
esp_ble_gattc_cb_param_t::gattc_exec_cmpl_evt_param (C++ class), 238
esp_ble_gattc_cb_param_t::gattc_exec_cmpl_evt_param::conn_id (C++ member), 238
esp_ble_gattc_cb_param_t::gattc_exec_cmpl_evt_param::status (C++ member), 238
esp_ble_gattc_cb_param_t::gattc_get_addr_list_evt_param (C++ class), 238
esp_ble_gattc_cb_param_t::gattc_get_addr_list_evt_param::conn_id (C++ member), 239
esp_ble_gattc_cb_param_t::gattc_get_addr_list_evt_param::count (C++ member), 239
esp_ble_gattc_cb_param_t::gattc_get_addr_list_evt_param::status (C++ member), 239
esp_ble_gattc_cb_param_t::gattc_notify_evt_param (C++ class), 239
esp_ble_gattc_cb_param_t::gattc_notify_evt_param::conn_id (C++ member), 239
esp_ble_gattc_cb_param_t::gattc_notify_evt_param::is_notify (C++ member), 239
esp_ble_gattc_cb_param_t::gattc_notify_evt_param::remote_bda (C++ member), 239
esp_ble_gattc_cb_param_t::gattc_notify_evt_param::value (C++ member), 239
esp_ble_gattc_cb_param_t::gattc_notify_evt_param::value_len (C++ member), 239
esp_ble_gattc_cb_param_t::gattc_open_evt_param (C++ class), 239
esp_ble_gattc_cb_param_t::gattc_open_evt_param::conn_id (C++ member), 239
esp_ble_gattc_cb_param_t::gattc_open_evt_param::ble_addr_type (C++ member), 239
esp_ble_gattc_cb_param_t::gattc_open_evt_param::conn_params (C++ member), 239
esp_ble_gattc_cb_param_t::gattc_open_evt_param::mtu (C++ member), 239
esp_ble_gattc_cb_param_t::gattc_open_evt_param::remote_bda (C++ member), 239
esp_ble_gattc_cb_param_t::gattc_queue_full_evt_param (C++ class), 239
esp_ble_gattc_cb_param_t::gattc_queue_full_evt_param::conn_id (C++ member), 239
esp_ble_gattc_cb_param_t::gattc_queue_full_evt_param::is_full (C++ member), 239
esp_ble_gattc_cb_param_t::gattc_queue_full_evt_param::status (C++ member), 239
esp_ble_gattc_cb_param_t::gattc_read_char_evt_param (C++ class), 240
esp_ble_gattc_cb_param_t::gattc_read_char_evt_param::conn_id (C++ member), 240
esp_ble_gattc_cb_param_t::gattc_read_char_evt_param::handle (C++ member), 240
esp_ble_gattc_cb_param_t::gattc_read_char_evt_param::status (C++ member), 240
esp_ble_gattc_cb_param_t::gattc_read_char_evt_param::value (C++ member), 240
esp_ble_gattc_cb_param_t::gattc_read_char_evt_param::value_len (C++ member), 240

esp_ble_gattc_cb_param_t::gattc_read_char_evt_param (C++ member), 240
esp_ble_gattc_cb_param_t::gattc_read_char_evt_param::conn_id (C++ member), 240
esp_ble_gattc_cb_param_t::gattc_reg_evt_param (C++ class), 240
esp_ble_gattc_cb_param_t::gattc_reg_evt_param::app_id (C++ member), 240
esp_ble_gattc_cb_param_t::gattc_reg_evt_param::status (C++ member), 240
esp_ble_gattc_cb_param_t::gattc_reg_for_notify_evt_param (C++ class), 240
esp_ble_gattc_cb_param_t::gattc_reg_for_notify_evt_param::handle (C++ member), 240
esp_ble_gattc_cb_param_t::gattc_reg_for_notify_evt_param::status (C++ member), 240
esp_ble_gattc_cb_param_t::gattc_search_cmpl_evt_param (C++ class), 240
esp_ble_gattc_cb_param_t::gattc_search_cmpl_evt_param::conn_id (C++ member), 240
esp_ble_gattc_cb_param_t::gattc_search_cmpl_evt_param::searched_service_source (C++ member), 240
esp_ble_gattc_cb_param_t::gattc_search_cmpl_evt_param::status (C++ member), 240
esp_ble_gattc_cb_param_t::gattc_search_res_evt_param (C++ class), 240
esp_ble_gattc_cb_param_t::gattc_search_res_evt_param::conn_id (C++ member), 241
esp_ble_gattc_cb_param_t::gattc_search_res_evt_param::end_handle (C++ member), 241
esp_ble_gattc_cb_param_t::gattc_search_res_evt_param::is_primary (C++ member), 241
esp_ble_gattc_cb_param_t::gattc_search_res_evt_param::srvc_id (C++ member), 241
esp_ble_gattc_cb_param_t::gattc_search_res_evt_param::start_handle (C++ member), 241
esp_ble_gattc_cb_param_t::gattc_set_assoc_addr_cmpl_evt_param (C++ class), 241
esp_ble_gattc_cb_param_t::gattc_set_assoc_addr_cmpl_evt_param::status (C++ member), 241
esp_ble_gattc_cb_param_t::gattc_srvc_chg_evt_param (C++ class), 241
esp_ble_gattc_cb_param_t::gattc_srvc_chg_evt_param::remote_bda (C++ member), 241
esp_ble_gattc_cb_param_t::gattc_unreg_for_notify_evt_param (C++ class), 241
esp_ble_gattc_cb_param_t::gattc_unreg_for_notify_evt_param::handle (C++ member), 241
esp_ble_gattc_cb_param_t::gattc_unreg_for_notify_evt_param::status (C++ member), 241
esp_ble_gattc_cb_param_t::gattc_write_evt_param (C++ class), 241
esp_ble_gattc_cb_param_t::gattc_write_evt_param::conn_id (C++ member), 241
esp_ble_gattc_cb_param_t::gattc_write_evt_param::handle (C++ member), 241
esp_ble_gattc_cb_param_t::gattc_write_evt_param::offset (C++ member), 242
esp_ble_gattc_cb_param_t::gattc_write_evt_param::status (C++ member), 241
esp_ble_gattc_cb_param_t::get_addr_list (C++ member), 237
esp_ble_gattc_cb_param_t::notify (C++ member), 236
esp_ble_gattc_cb_param_t::open (C++ member), 236
esp_ble_gattc_cb_param_t::queue_full (C++ member), 237
esp_ble_gattc_cb_param_t::read (C++ member), 236
esp_ble_gattc_cb_param_t::reg (C++ member), 236
esp_ble_gattc_cb_param_t::reg_for_notify (C++ member), 236
esp_ble_gattc_cb_param_t::search_cmpl (C++ member), 236
esp_ble_gattc_cb_param_t::search_res (C++ member), 236
esp_ble_gattc_cb_param_t::searched_service_source (C++ member), 236
esp_ble_gattc_cb_param_t::srvc_chg (C++ member), 236
esp_ble_gattc_cb_param_t::unreg_for_notify (C++ member), 236
esp_ble_gattc_cb_param_t::write (C++ member), 236
esp_ble_gattc_close (C++ function), 229
esp_ble_gattc_execute_write (C++ function), 234
esp_ble_gattc_get_all_char (C++ function), 230
esp_ble_gattc_get_all_descr (C++ function), 230
esp_ble_gattc_get_attr_count (C++ function), 232
esp_ble_gattc_get_char_by_uuid (C++ function), 230
esp_ble_gattc_get_db (C++ function), 232
esp_ble_gattc_get_descr_by_char_handle (C++ function), 231
esp_ble_gattc_get_descr_by_uuid (C++ function), 231
esp_ble_gattc_get_include_service (C++ function), 231
esp_ble_gattc_get_service (C++ function), 229
esp_ble_gattc_open (C++ function), 228
esp_ble_gattc_prepare_write (C++ function), 234
esp_ble_gattc_prepare_write_char_descr (C++ function), 234
esp_ble_gattc_read_by_type (C++ function), 233
esp_ble_gattc_read_char (C++ function), 232
esp_ble_gattc_read_char_descr (C++ function), 233

esp_ble_gattc_read_multiple (*C++ function*), 233
esp_ble_gattc_register_callback (*C++ function*), 228
esp_ble_gattc_register_for_notify (*C++ function*), 235
esp_ble_gattc_search_service (*C++ function*), 229
esp_ble_gattc_send_mtu_req (*C++ function*), 229
esp_ble_gattc_unregister_for_notify (*C++ function*), 235
esp_ble_gattc_write_char (*C++ function*), 233
esp_ble_gattc_write_char_descr (*C++ function*), 233
esp_ble_gatts_add_char (*C++ function*), 217
esp_ble_gatts_add_char_descr (*C++ function*), 217
esp_ble_gatts_add_included_service (*C++ function*), 217
esp_ble_gatts_app_register (*C++ function*), 216
esp_ble_gatts_app_unregister (*C++ function*), 216
esp_ble_gatts_cb_param_t (*C++ union*), 219
esp_ble_gatts_cb_param_t::add_attr_tab (*C++ member*), 220
esp_ble_gatts_cb_param_t::add_char (*C++ member*), 220
esp_ble_gatts_cb_param_t::add_char_descr (*C++ member*), 220
esp_ble_gatts_cb_param_t::add_incl_srvc (*C++ member*), 220
esp_ble_gatts_cb_param_t::cancel_open (*C++ member*), 220
esp_ble_gatts_cb_param_t::close (*C++ member*), 220
esp_ble_gatts_cb_param_t::conf (*C++ member*), 219
esp_ble_gatts_cb_param_t::congest (*C++ member*), 220
esp_ble_gatts_cb_param_t::connect (*C++ member*), 220
esp_ble_gatts_cb_param_t::create (*C++ member*), 220
esp_ble_gatts_cb_param_t::del (*C++ member*), 220
esp_ble_gatts_cb_param_t::disconnect (*C++ member*), 220
esp_ble_gatts_cb_param_t::exec_write (*C++ member*), 219
esp_ble_gatts_cb_param_t::gatts_add_attr_tab_evt_param (*C++ class*), 220
esp_ble_gatts_cb_param_t::gatts_add_attr_tab_evt_param::handles (*C++ member*), 221
esp_ble_gatts_cb_param_t::gatts_add_attr_tab_evt_param::num_handle (*C++ member*), 220
esp_ble_gatts_cb_param_t::gatts_add_attr_tab_evt_param::status (*C++ member*), 220
esp_ble_gatts_cb_param_t::gatts_add_attr_tab_evt_param::svc_uuid (*C++ member*), 220
esp_ble_gatts_cb_param_t::gatts_add_char_descr_evt_param (*C++ class*), 221
esp_ble_gatts_cb_param_t::gatts_add_char_descr_evt_param::attr_handle (*C++ member*), 221
esp_ble_gatts_cb_param_t::gatts_add_char_descr_evt_param::service_handle (*C++ member*), 221
esp_ble_gatts_cb_param_t::gatts_add_char_descr_evt_param::status (*C++ member*), 221
esp_ble_gatts_cb_param_t::gatts_add_char_descr_evt_param::uuid (*C++ member*), 221
esp_ble_gatts_cb_param_t::gatts_add_char_evt_param (*C++ class*), 221
esp_ble_gatts_cb_param_t::gatts_add_char_evt_param::attr_handle (*C++ member*), 221
esp_ble_gatts_cb_param_t::gatts_add_char_evt_param::char_handle (*C++ member*), 221
esp_ble_gatts_cb_param_t::gatts_add_char_evt_param::properties (*C++ member*), 221
esp_ble_gatts_cb_param_t::gatts_add_char_evt_param::service_handle (*C++ member*), 221
esp_ble_gatts_cb_param_t::gatts_add_char_evt_param::status (*C++ member*), 221
esp_ble_gatts_cb_param_t::gatts_add_char_evt_param::uuid (*C++ member*), 221
esp_ble_gatts_cb_param_t::gatts_add_incl_srvc_evt_param (*C++ class*), 221
esp_ble_gatts_cb_param_t::gatts_add_incl_srvc_evt_param::attr_handle (*C++ member*), 221
esp_ble_gatts_cb_param_t::gatts_add_incl_srvc_evt_param::service_handle (*C++ member*), 221
esp_ble_gatts_cb_param_t::gatts_add_incl_srvc_evt_param::status (*C++ member*), 221
esp_ble_gatts_cb_param_t::gatts_cancel_open_evt_param (*C++ class*), 221
esp_ble_gatts_cb_param_t::gatts_cancel_open_evt_param::status (*C++ member*), 222
esp_ble_gatts_cb_param_t::gatts_close_evt_param (*C++ class*), 222
esp_ble_gatts_cb_param_t::gatts_close_evt_param::conn_id (*C++ member*), 222
esp_ble_gatts_cb_param_t::gatts_close_evt_param::status (*C++ member*), 222
esp_ble_gatts_cb_param_t::gatts_conf_evt_param (*C++ class*), 222
esp_ble_gatts_cb_param_t::gatts_conf_evt_param::conn_id (*C++ member*), 222
esp_ble_gatts_cb_param_t::gatts_conf_evt_param::handle (*C++ member*), 222
esp_ble_gatts_cb_param_t::gatts_conf_evt_param::len (*C++ member*), 222
esp_ble_gatts_cb_param_t::gatts_conf_evt_param::status (*C++ member*), 222
esp_ble_gatts_cb_param_t::gatts_conf_evt_param::value (*C++ member*), 222
esp_ble_gatts_cb_param_t::gatts_congest_evt_param (*C++ class*), 222

esp_ble_gatts_cb_param_t::gatts_congest (C++ member), 222
esp_ble_gatts_cb_param_t::gatts_congest (C++ member), 222
esp_ble_gatts_cb_param_t::gatts_connect (C++ class), 222
esp_ble_gatts_cb_param_t::gatts_connect (C++ member), 223
esp_ble_gatts_cb_param_t::gatts_connect (C++ member), 223
esp_ble_gatts_cb_param_t::gatts_connect (C++ member), 222
esp_ble_gatts_cb_param_t::gatts_connect (C++ member), 223
esp_ble_gatts_cb_param_t::gatts_connect (C++ member), 222
esp_ble_gatts_cb_param_t::gatts_connect (C++ member), 222
esp_ble_gatts_cb_param_t::gatts_create (C++ class), 223
esp_ble_gatts_cb_param_t::gatts_create (C++ member), 223
esp_ble_gatts_cb_param_t::gatts_create (C++ member), 223
esp_ble_gatts_cb_param_t::gatts_create (C++ member), 223
esp_ble_gatts_cb_param_t::gatts_delete (C++ class), 223
esp_ble_gatts_cb_param_t::gatts_delete (C++ member), 223
esp_ble_gatts_cb_param_t::gatts_delete (C++ member), 223
esp_ble_gatts_cb_param_t::gatts_disconn (C++ class), 223
esp_ble_gatts_cb_param_t::gatts_disconn (C++ member), 223
esp_ble_gatts_cb_param_t::gatts_disconn (C++ member), 223
esp_ble_gatts_cb_param_t::gatts_disconn (C++ member), 223
esp_ble_gatts_cb_param_t::gatts_exec_wri (C++ class), 223
esp_ble_gatts_cb_param_t::gatts_exec_wri (C++ member), 224
esp_ble_gatts_cb_param_t::gatts_exec_wri (C++ member), 223
esp_ble_gatts_cb_param_t::gatts_exec_wri (C++ member), 224
esp_ble_gatts_cb_param_t::gatts_exec_wri (C++ member), 223
esp_ble_gatts_cb_param_t::gatts_mtu_evt (C++ class), 224
esp_ble_gatts_cb_param_t::gatts_mtu_evt (C++ member), 224
esp_ble_gatts_cb_param_t::gatts_mtu_evt (C++ member), 224
esp_ble_gatts_cb_param_t::gatts_open_evt (C++ class), 224
esp_ble_gatts_cb_param_t::gatts_open_evt_param::s (C++ member), 224
esp_ble_gatts_cb_param_t::gatts_read_evt_param (C++ class), 224
esp_ble_gatts_cb_param_t::gatts_read_evt_param::b (C++ member), 224
esp_ble_gatts_cb_param_t::gatts_read_evt_param::c (C++ member), 224
esp_ble_gatts_cb_param_t::gatts_read_evt_param::h (C++ member), 224
esp_ble_gatts_cb_param_t::gatts_read_evt_param::i (C++ member), 224
esp_ble_gatts_cb_param_t::gatts_read_evt_param::n (C++ member), 224
esp_ble_gatts_cb_param_t::gatts_read_evt_param::o (C++ member), 224
esp_ble_gatts_cb_param_t::gatts_read_evt_param::t (C++ member), 224
esp_ble_gatts_cb_param_t::gatts_reg_evt_param (C++ class), 224
esp_ble_gatts_cb_param_t::gatts_reg_evt_param::ap (C++ member), 225
esp_ble_gatts_cb_param_t::gatts_reg_evt_param::st (C++ member), 225
esp_ble_gatts_cb_param_t::gatts_rsp_evt_param (C++ class), 225
esp_ble_gatts_cb_param_t::gatts_rsp_evt_param::ha (C++ member), 225
esp_ble_gatts_cb_param_t::gatts_rsp_evt_param::st (C++ member), 225
esp_ble_gatts_cb_param_t::gatts_send_service_chan (C++ member), 225
esp_ble_gatts_cb_param_t::gatts_send_service_chan (C++ class), 225
esp_ble_gatts_cb_param_t::gatts_set_attr_val_evt_ (C++ class), 225
esp_ble_gatts_cb_param_t::gatts_set_attr_val_evt_ (C++ member), 225
esp_ble_gatts_cb_param_t::gatts_set_attr_val_evt_ (C++ member), 225
esp_ble_gatts_cb_param_t::gatts_set_attr_val_evt_ (C++ member), 225
esp_ble_gatts_cb_param_t::gatts_start_evt_param (C++ class), 225
esp_ble_gatts_cb_param_t::gatts_start_evt_param:: (C++ member), 225
esp_ble_gatts_cb_param_t::gatts_start_evt_param:: (C++ member), 225
esp_ble_gatts_cb_param_t::gatts_stop_evt_param (C++ class), 225
esp_ble_gatts_cb_param_t::gatts_stop_evt_param::s (C++ member), 226
esp_ble_gatts_cb_param_t::gatts_stop_evt_param::s (C++ member), 226
esp_ble_gatts_cb_param_t::gatts_write_evt_param (C++ class), 226
esp_ble_gatts_cb_param_t::gatts_write_evt_param:: (C++ member), 226

esp_ble_gatts_cb_param_t::gatts_write_evt_param::conn_id (C++ member), 226
esp_ble_gatts_cb_param_t::gatts_write_evt_param::handle (C++ member), 226
esp_ble_gatts_cb_param_t::gatts_write_evt_param::is_prep (C++ member), 226
esp_ble_gatts_cb_param_t::gatts_write_evt_param::len (C++ member), 226
esp_ble_gatts_cb_param_t::gatts_write_evt_param::need_rsp (C++ member), 226
esp_ble_gatts_cb_param_t::gatts_write_evt_param::offset (C++ member), 226
esp_ble_gatts_cb_param_t::gatts_write_evt_param::trans_id (C++ member), 226
esp_ble_gatts_cb_param_t::gatts_write_evt_param::value (C++ member), 226
esp_ble_gatts_cb_param_t::mtu (C++ member), 219
esp_ble_gatts_cb_param_t::open (C++ member), 220
esp_ble_gatts_cb_param_t::read (C++ member), 219
esp_ble_gatts_cb_param_t::reg (C++ member), 219
esp_ble_gatts_cb_param_t::rsp (C++ member), 220
esp_ble_gatts_cb_param_t::service_change (C++ member), 220
esp_ble_gatts_cb_param_t::set_attr_val (C++ member), 220
esp_ble_gatts_cb_param_t::start (C++ member), 220
esp_ble_gatts_cb_param_t::stop (C++ member), 220
esp_ble_gatts_cb_param_t::write (C++ member), 219
esp_ble_gatts_close (C++ function), 219
esp_ble_gatts_create_attr_tab (C++ function), 216
esp_ble_gatts_create_service (C++ function), 216
esp_ble_gatts_delete_service (C++ function), 217
esp_ble_gatts_get_attr_value (C++ function), 218
esp_ble_gatts_open (C++ function), 219
esp_ble_gatts_register_callback (C++ function), 216
esp_ble_gatts_send_indicate (C++ function), 218
esp_ble_gatts_send_response (C++ function), 218
esp_ble_gatts_send_service_change_indication (C++ function), 219
esp_ble_gatts_set_attr_value (C++ function), 218
esp_ble_gatts_start_service (C++ function), 217
esp_ble_gatts_stop_service (C++ function), 218
esp_ble_gatts_table_device_list (C++ function), 166
esp_ble_gatts_table_device_num (C++ function), 166
esp_ble_gatts_current_conn_params (C++ function), 167
ESP_BLE_LINK_KEY_MASK (C 宏), 156
esp_ble_io_cap_t (C++ type), 198
ESP_BLE_LOFFSET_PARAM (C 宏), 155
esp_ble_key_mask_t (C++ type), 156
esp_ble_key_t (C++ class), 189
esp_ble_key_t::bd_addr (C++ member), 189
esp_ble_key_t::key_type (C++ member), 189
esp_ble_key_t::p_key_value (C++ member), 189
esp_ble_key_type_t (C++ type), 198
esp_ble_key_value_t (C++ union), 171
esp_ble_key_value_t::lcsrk_key (C++ member), 171
esp_ble_key_value_t::lenc_key (C++ member), 171
esp_ble_key_value_t::pcsrk_key (C++ member), 171
esp_ble_key_value_t::penc_key (C++ member), 171
esp_ble_key_value_t::pid_key (C++ member), 171
esp_ble_lcsrk_keys (C++ class), 188
esp_ble_lcsrk_keys::counter (C++ member), 188
esp_ble_lcsrk_keys::csrk (C++ member), 188
esp_ble_lcsrk_keys::div (C++ member), 188
esp_ble_lcsrk_keys::sec_level (C++ member), 188
ESP_BLE_LEGACY_ADV_TYPE_DIRECT_IND (C 宏), 198
ESP_BLE_LEGACY_ADV_TYPE_IND (C 宏), 198
ESP_BLE_LEGACY_ADV_TYPE_NONCON_IND (C 宏), 198
ESP_BLE_LEGACY_ADV_TYPE_SCAN_IND (C 宏), 198
ESP_BLE_LEGACY_ADV_TYPE_SCAN_RSP_TO_ADV_IND (C 宏), 198
ESP_BLE_LEGACY_ADV_TYPE_SCAN_RSP_TO_ADV_SCAN_IND (C 宏), 198
esp_ble_lenc_keys_t (C++ class), 188
esp_ble_lenc_keys_t::div (C++ member), 188
esp_ble_lenc_keys_t::key_size (C++ member), 188
esp_ble_lenc_keys_t::ltk (C++ member), 188
esp_ble_lenc_keys_t::sec_level (C++ member), 188
ESP_BLE_LINK_KEY_MASK (C 宏), 156

esp_ble_local_id_keys_t (C++ class), 189
esp_ble_local_id_keys_t::dhk (C++ member), 189
esp_ble_local_id_keys_t::ir (C++ member), 189
esp_ble_local_id_keys_t::irk (C++ member), 189
ESP_BLE_MESH_ACTUATOR_BLOCKED_ERROR (C 宏), 434
ESP_BLE_MESH_ACTUATOR_BLOCKED_WARNING (C 宏), 434
ESP_BLE_MESH_ADDR_ALL_NODES (C 宏), 365
ESP_BLE_MESH_ADDR_FRIENDS (C 宏), 365
ESP_BLE_MESH_ADDR_IS_GROUP (C 宏), 365
ESP_BLE_MESH_ADDR_IS_RFU (C 宏), 365
ESP_BLE_MESH_ADDR_IS_UNICAST (C 宏), 365
ESP_BLE_MESH_ADDR_IS_VIRTUAL (C 宏), 365
ESP_BLE_MESH_ADDR_PROXIES (C 宏), 365
ESP_BLE_MESH_ADDR_RELAYS (C 宏), 365
ESP_BLE_MESH_ADDR_TYPE_PUBLIC (C 宏), 367
ESP_BLE_MESH_ADDR_TYPE_RANDOM (C 宏), 367
ESP_BLE_MESH_ADDR_TYPE_RPA_PUBLIC (C 宏), 367
ESP_BLE_MESH_ADDR_TYPE_RPA_RANDOM (C 宏), 367
esp_ble_mesh_addr_type_t (C++ type), 379
ESP_BLE_MESH_ADDR_UNASSIGNED (C 宏), 365
ESP_BLE_MESH_BATTERY_LOW_ERROR (C 宏), 433
ESP_BLE_MESH_BATTERY_LOW_WARNING (C 宏), 433
esp_ble_mesh_bd_addr_t (C++ type), 379
ESP_BLE_MESH_BEACON_DISABLED (C 宏), 365
ESP_BLE_MESH_BEACON_ENABLED (C 宏), 365
ESP_BLE_MESH_BEEP (C++ enumerator), 380
ESP_BLE_MESH_BLINK (C++ enumerator), 380
esp_ble_mesh_cb_t (C++ type), 379
esp_ble_mesh_cb_type_t (C++ enum), 380
esp_ble_mesh_cfg_app_key_add_t (C++ class), 412
esp_ble_mesh_cfg_app_key_add_t::app_idx (C++ member), 412
esp_ble_mesh_cfg_app_key_add_t::app_key (C++ member), 412
esp_ble_mesh_cfg_app_key_add_t::net_idx (C++ member), 412
esp_ble_mesh_cfg_app_key_delete_t (C++ class), 416
esp_ble_mesh_cfg_app_key_delete_t::app_idx (C++ member), 416
esp_ble_mesh_cfg_app_key_delete_t::net_idx (C++ member), 416
esp_ble_mesh_cfg_app_key_get_t (C++ class), 410
esp_ble_mesh_cfg_app_key_get_t::net_idx (C++ member), 410
esp_ble_mesh_cfg_app_key_list_cb_t (C++ class), 421
esp_ble_mesh_cfg_app_key_list_cb_t::app_idx (C++ member), 421
esp_ble_mesh_cfg_app_key_list_cb_t::net_idx (C++ member), 421
esp_ble_mesh_cfg_app_key_list_cb_t::status (C++ member), 421
esp_ble_mesh_cfg_app_key_status_cb_t (C++ class), 419
esp_ble_mesh_cfg_app_key_status_cb_t::app_idx (C++ member), 419
esp_ble_mesh_cfg_app_key_status_cb_t::net_idx (C++ member), 419
esp_ble_mesh_cfg_app_key_status_cb_t::status (C++ member), 419
esp_ble_mesh_cfg_app_key_update_t (C++ class), 415
esp_ble_mesh_cfg_app_key_update_t::app_idx (C++ member), 415
esp_ble_mesh_cfg_app_key_update_t::app_key (C++ member), 415
esp_ble_mesh_cfg_app_key_update_t::net_idx (C++ member), 415
esp_ble_mesh_cfg_beacon_set_t (C++ class), 411
esp_ble_mesh_cfg_beacon_set_t::beacon (C++ member), 411
esp_ble_mesh_cfg_beacon_status_cb_t (C++ class), 417
esp_ble_mesh_cfg_beacon_status_cb_t::beacon (C++ member), 417
esp_ble_mesh_cfg_client_cb_event_t (C++ enum), 427
esp_ble_mesh_cfg_client_cb_param_t (C++ class), 422
esp_ble_mesh_cfg_client_cb_param_t::error_code (C++ member), 423
esp_ble_mesh_cfg_client_cb_param_t::params (C++ member), 423
esp_ble_mesh_cfg_client_cb_param_t::status_cb (C++ member), 423
esp_ble_mesh_cfg_client_cb_t (C++ type), 426
esp_ble_mesh_cfg_client_common_cb_param_t (C++ union), 406
esp_ble_mesh_cfg_client_common_cb_param_t::appkey (C++ member), 407
esp_ble_mesh_cfg_client_common_cb_param_t::appkey (C++ member), 406
esp_ble_mesh_cfg_client_common_cb_param_t::beacon (C++ member), 406
esp_ble_mesh_cfg_client_common_cb_param_t::comp_d (C++ member), 406
esp_ble_mesh_cfg_client_common_cb_param_t::defaul (C++ member), 406
esp_ble_mesh_cfg_client_common_cb_param_t::friend (C++ member), 406
esp_ble_mesh_cfg_client_common_cb_param_t::gatt_p (C++ member), 406

esp_ble_mesh_cfg_client_common_cb_param..., 407
esp_ble_mesh_cfg_client_common_cb_param..., 407
esp_ble_mesh_cfg_client_common_cb_param..., 407
esp_ble_mesh_cfg_client_common_cb_param..., 407
esp_ble_mesh_cfg_client_common_cb_param..., 407
esp_ble_mesh_cfg_client_common_cb_param..., 406
esp_ble_mesh_cfg_client_common_cb_param..., 406
esp_ble_mesh_cfg_client_common_cb_param..., 407
esp_ble_mesh_cfg_client_common_cb_param..., 407
esp_ble_mesh_cfg_client_common_cb_param..., 406
esp_ble_mesh_cfg_client_common_cb_param..., 406
esp_ble_mesh_cfg_client_common_cb_param..., 407
esp_ble_mesh_cfg_client_common_cb_param..., 406
ESP_BLE_MESH_CFG_CLIENT_EVT_MAX (C++ enumerator), 427
ESP_BLE_MESH_CFG_CLIENT_GET_STATE_EVT (C++ enumerator), 427
esp_ble_mesh_cfg_client_get_state_t (C++ union), 404
esp_ble_mesh_cfg_client_get_state_t::app..., 404
esp_ble_mesh_cfg_client_get_state_t::com..., 404
esp_ble_mesh_cfg_client_get_state_t::kr..., 404
esp_ble_mesh_cfg_client_get_state_t::lp..., 404
esp_ble_mesh_cfg_client_get_state_t::mo..., 404
esp_ble_mesh_cfg_client_get_state_t::no..., 404
esp_ble_mesh_cfg_client_get_state_t::si..., 404
esp_ble_mesh_cfg_client_get_state_t::si..., 404
esp_ble_mesh_cfg_client_get_state_t::vn..., 404
esp_ble_mesh_cfg_client_get_state_t::vn..., 404
ESP_BLE_MESH_CFG_CLIENT_PUBLISH_EVT (C++ enumerator), 427
ESP_BLE_MESH_CFG_CLIENT_SET_STATE_EVT (C++ enumerator), 427
esp_ble_mesh_cfg_client_set_state_t (C++ union), 405
esp_ble_mesh_cfg_client_set_state_t::app_key_add (C++ member), 405
esp_ble_mesh_cfg_client_set_state_t::app_key_dele (C++ member), 406
esp_ble_mesh_cfg_client_set_state_t::app_key_upda (C++ member), 406
esp_ble_mesh_cfg_client_set_state_t::beacon_set (C++ member), 405
esp_ble_mesh_cfg_client_set_state_t::default_ttl_ (C++ member), 405
esp_ble_mesh_cfg_client_set_state_t::friend_set (C++ member), 405
esp_ble_mesh_cfg_client_set_state_t::gatt_proxy_s (C++ member), 405
esp_ble_mesh_cfg_client_set_state_t::heartbeat_pu (C++ member), 405
esp_ble_mesh_cfg_client_set_state_t::heartbeat_su (C++ member), 405
esp_ble_mesh_cfg_client_set_state_t::kr_phase_set (C++ member), 406
esp_ble_mesh_cfg_client_set_state_t::model_app_bi (C++ member), 405
esp_ble_mesh_cfg_client_set_state_t::model_app_un (C++ member), 406
esp_ble_mesh_cfg_client_set_state_t::model_pub_se (C++ member), 405
esp_ble_mesh_cfg_client_set_state_t::model_pub_va (C++ member), 406
esp_ble_mesh_cfg_client_set_state_t::model_sub_ad (C++ member), 405
esp_ble_mesh_cfg_client_set_state_t::model_sub_de (C++ member), 405
esp_ble_mesh_cfg_client_set_state_t::model_sub_de (C++ member), 406
esp_ble_mesh_cfg_client_set_state_t::model_sub_ov (C++ member), 405
esp_ble_mesh_cfg_client_set_state_t::model_sub_va (C++ member), 405
esp_ble_mesh_cfg_client_set_state_t::model_sub_va (C++ member), 405
esp_ble_mesh_cfg_client_set_state_t::model_sub_va (C++ member), 405
esp_ble_mesh_cfg_client_set_state_t::net_key_add (C++ member), 405
esp_ble_mesh_cfg_client_set_state_t::net_key_dele (C++ member), 406
esp_ble_mesh_cfg_client_set_state_t::net_key_upda (C++ member), 406
esp_ble_mesh_cfg_client_set_state_t::net_transmit (C++ member), 406
esp_ble_mesh_cfg_client_set_state_t::node_identit (C++ member), 406
esp_ble_mesh_cfg_client_set_state_t::relay_set (C++ member), 405
ESP_BLE_MESH_CFG_CLIENT_TIMEOUT_EVT (C++ enumerator), 427

esp_ble_mesh_cfg_comp_data_status_cb_t (*C++ class*), 417
esp_ble_mesh_cfg_comp_data_status_cb_t::composition_data (*C++ member*), 417
esp_ble_mesh_cfg_comp_data_status_cb_t::page (*C++ member*), 417
esp_ble_mesh_cfg_composition_data_get_t (*C++ class*), 409
esp_ble_mesh_cfg_composition_data_get_t::page (*C++ member*), 409
esp_ble_mesh_cfg_default_ttl_set_t (*C++ class*), 411
esp_ble_mesh_cfg_default_ttl_set_t::ttl (*C++ member*), 411
esp_ble_mesh_cfg_default_ttl_status_cb_t (*C++ class*), 417
esp_ble_mesh_cfg_default_ttl_status_cb_t::default_ttl (*C++ member*), 418
esp_ble_mesh_cfg_friend_set_t (*C++ class*), 411
esp_ble_mesh_cfg_friend_set_t::friend_state (*C++ member*), 411
esp_ble_mesh_cfg_friend_status_cb_t (*C++ class*), 420
esp_ble_mesh_cfg_friend_status_cb_t::friend_state (*C++ member*), 420
esp_ble_mesh_cfg_gatt_proxy_set_t (*C++ class*), 411
esp_ble_mesh_cfg_gatt_proxy_set_t::gatt_proxy (*C++ member*), 411
esp_ble_mesh_cfg_gatt_proxy_status_cb_t (*C++ class*), 418
esp_ble_mesh_cfg_gatt_proxy_status_cb_t::gatt_proxy (*C++ member*), 418
esp_ble_mesh_cfg_hb_pub_status_cb_t (*C++ class*), 420
esp_ble_mesh_cfg_hb_pub_status_cb_t::count (*C++ member*), 420
esp_ble_mesh_cfg_hb_pub_status_cb_t::dst (*C++ member*), 420
esp_ble_mesh_cfg_hb_pub_status_cb_t::feature (*C++ member*), 420
esp_ble_mesh_cfg_hb_pub_status_cb_t::net_idx (*C++ member*), 420
esp_ble_mesh_cfg_hb_pub_status_cb_t::period (*C++ member*), 420
esp_ble_mesh_cfg_hb_pub_status_cb_t::status (*C++ member*), 420
esp_ble_mesh_cfg_hb_sub_status_cb_t (*C++ class*), 420
esp_ble_mesh_cfg_hb_sub_status_cb_t::count (*C++ member*), 420
esp_ble_mesh_cfg_hb_sub_status_cb_t::dst (*C++ member*), 420
esp_ble_mesh_cfg_hb_sub_status_cb_t::max_hops (*C++ member*), 420
esp_ble_mesh_cfg_hb_sub_status_cb_t::min_hops (*C++ member*), 420
esp_ble_mesh_cfg_hb_sub_status_cb_t::period (*C++ member*), 420
esp_ble_mesh_cfg_hb_sub_status_cb_t::src (*C++ member*), 420
esp_ble_mesh_cfg_hb_sub_status_cb_t::status (*C++ member*), 420
esp_ble_mesh_cfg_heartbeat_pub_set_t (*C++ class*), 417
esp_ble_mesh_cfg_heartbeat_pub_set_t::count (*C++ member*), 417
esp_ble_mesh_cfg_heartbeat_pub_set_t::dst (*C++ member*), 417
esp_ble_mesh_cfg_heartbeat_pub_set_t::feature (*C++ member*), 417
esp_ble_mesh_cfg_heartbeat_pub_set_t::net_idx (*C++ member*), 417
esp_ble_mesh_cfg_heartbeat_pub_set_t::period (*C++ member*), 417
esp_ble_mesh_cfg_heartbeat_pub_set_t::ttl (*C++ member*), 417
esp_ble_mesh_cfg_heartbeat_sub_set_t (*C++ class*), 417
esp_ble_mesh_cfg_heartbeat_sub_set_t::dst (*C++ member*), 417
esp_ble_mesh_cfg_heartbeat_sub_set_t::period (*C++ member*), 417
esp_ble_mesh_cfg_heartbeat_sub_set_t::src (*C++ member*), 417
esp_ble_mesh_cfg_kr_phase_get_t (*C++ class*), 410
esp_ble_mesh_cfg_kr_phase_get_t::net_idx (*C++ member*), 411
esp_ble_mesh_cfg_kr_phase_set_t (*C++ class*), 416
esp_ble_mesh_cfg_kr_phase_set_t::net_idx (*C++ member*), 416
esp_ble_mesh_cfg_kr_phase_set_t::transition (*C++ member*), 416
esp_ble_mesh_cfg_kr_phase_status_cb_t (*C++ class*), 422
esp_ble_mesh_cfg_kr_phase_status_cb_t::net_idx (*C++ member*), 422
esp_ble_mesh_cfg_kr_phase_status_cb_t::phase (*C++ member*), 422
esp_ble_mesh_cfg_kr_phase_status_cb_t::status (*C++ member*), 422
esp_ble_mesh_cfg_lpn_polltimeout_get_t (*C++ class*), 411
esp_ble_mesh_cfg_lpn_polltimeout_get_t::lpn_addr (*C++ member*), 411
esp_ble_mesh_cfg_lpn_pollto_status_cb_t (*C++ class*), 422
esp_ble_mesh_cfg_lpn_pollto_status_cb_t::lpn_addr (*C++ member*), 422
esp_ble_mesh_cfg_lpn_pollto_status_cb_t::poll_tim (*C++ member*), 422

esp_ble_mesh_cfg_mod_app_status_cb_t (C++ class), 419
esp_ble_mesh_cfg_mod_app_status_cb_t::app_idx (C++ member), 419
esp_ble_mesh_cfg_mod_app_status_cb_t::company_id (C++ member), 419
esp_ble_mesh_cfg_mod_app_status_cb_t::element_addr (C++ member), 419
esp_ble_mesh_cfg_mod_app_status_cb_t::model_id (C++ member), 419
esp_ble_mesh_cfg_mod_app_status_cb_t::status (C++ member), 419
esp_ble_mesh_cfg_model_app_bind_t (C++ class), 412
esp_ble_mesh_cfg_model_app_bind_t::company_id (C++ member), 412
esp_ble_mesh_cfg_model_app_bind_t::element_addr (C++ member), 412
esp_ble_mesh_cfg_model_app_bind_t::model_app_idx (C++ member), 412
esp_ble_mesh_cfg_model_app_bind_t::model_id (C++ member), 412
esp_ble_mesh_cfg_model_app_list_cb_t (C++ class), 422
esp_ble_mesh_cfg_model_app_list_cb_t::app_idx (C++ member), 422
esp_ble_mesh_cfg_model_app_list_cb_t::company_id (C++ member), 422
esp_ble_mesh_cfg_model_app_list_cb_t::element_addr (C++ member), 422
esp_ble_mesh_cfg_model_app_list_cb_t::model_id (C++ member), 422
esp_ble_mesh_cfg_model_app_list_cb_t::status (C++ member), 422
esp_ble_mesh_cfg_model_app_unbind_t (C++ class), 416
esp_ble_mesh_cfg_model_app_unbind_t::company_id (C++ member), 416
esp_ble_mesh_cfg_model_app_unbind_t::element_addr (C++ member), 416
esp_ble_mesh_cfg_model_app_unbind_t::model_app_idx (C++ member), 416
esp_ble_mesh_cfg_model_app_unbind_t::model_id (C++ member), 416
esp_ble_mesh_cfg_model_pub_get_t (C++ class), 409
esp_ble_mesh_cfg_model_pub_get_t::company_id (C++ member), 409
esp_ble_mesh_cfg_model_pub_get_t::element_addr (C++ member), 409
esp_ble_mesh_cfg_model_pub_get_t::model_id (C++ member), 409
esp_ble_mesh_cfg_model_pub_set_t (C++ class), 412
esp_ble_mesh_cfg_model_pub_set_t::company_id (C++ member), 413
esp_ble_mesh_cfg_model_pub_set_t::cred_flag (C++ member), 412
esp_ble_mesh_cfg_model_pub_set_t::element_addr (C++ member), 412
esp_ble_mesh_cfg_model_pub_set_t::model_id (C++ member), 413
esp_ble_mesh_cfg_model_pub_set_t::publish_addr (C++ member), 412
esp_ble_mesh_cfg_model_pub_set_t::publish_app_idx (C++ member), 412
esp_ble_mesh_cfg_model_pub_set_t::publish_period (C++ member), 412
esp_ble_mesh_cfg_model_pub_set_t::publish_retrans (C++ member), 412
esp_ble_mesh_cfg_model_pub_set_t::publish_ttl (C++ member), 412
esp_ble_mesh_cfg_model_pub_status_cb_t (C++ class), 418
esp_ble_mesh_cfg_model_pub_status_cb_t::app_idx (C++ member), 418
esp_ble_mesh_cfg_model_pub_status_cb_t::company_id (C++ member), 418
esp_ble_mesh_cfg_model_pub_status_cb_t::cred_flag (C++ member), 418
esp_ble_mesh_cfg_model_pub_status_cb_t::element_addr (C++ member), 418
esp_ble_mesh_cfg_model_pub_status_cb_t::model_id (C++ member), 418
esp_ble_mesh_cfg_model_pub_status_cb_t::period (C++ member), 418
esp_ble_mesh_cfg_model_pub_status_cb_t::publish_addr (C++ member), 418
esp_ble_mesh_cfg_model_pub_status_cb_t::status (C++ member), 418
esp_ble_mesh_cfg_model_pub_status_cb_t::transmit (C++ member), 418
esp_ble_mesh_cfg_model_pub_status_cb_t::ttl (C++ member), 418
esp_ble_mesh_cfg_model_pub_va_set_t (C++ class), 414
esp_ble_mesh_cfg_model_pub_va_set_t::company_id (C++ member), 415
esp_ble_mesh_cfg_model_pub_va_set_t::cred_flag (C++ member), 414
esp_ble_mesh_cfg_model_pub_va_set_t::element_addr (C++ member), 414
esp_ble_mesh_cfg_model_pub_va_set_t::label_uuid (C++ member), 414
esp_ble_mesh_cfg_model_pub_va_set_t::model_id (C++ member), 415
esp_ble_mesh_cfg_model_pub_va_set_t::publish_app_ (C++ member), 414
esp_ble_mesh_cfg_model_pub_va_set_t::publish_peri (C++ member), 415
esp_ble_mesh_cfg_model_pub_va_set_t::publish_retr (C++ member), 415
esp_ble_mesh_cfg_model_pub_va_set_t::publish_ttl (C++ member), 415
esp_ble_mesh_cfg_model_sub_add_t (C++ class), 413

esp_ble_mesh_cfg_model_sub_add_t::company_id (C++ member), 413
esp_ble_mesh_cfg_model_sub_add_t::element_addr (C++ member), 413
esp_ble_mesh_cfg_model_sub_add_t::model_id (C++ member), 413
esp_ble_mesh_cfg_model_sub_add_t::sub_addr (C++ member), 413
esp_ble_mesh_cfg_model_sub_delete_all_t (C++ class), 415
esp_ble_mesh_cfg_model_sub_delete_all_t::company_id (C++ member), 415
esp_ble_mesh_cfg_model_sub_delete_all_t::element_addr (C++ member), 415
esp_ble_mesh_cfg_model_sub_delete_all_t::model_id (C++ member), 415
esp_ble_mesh_cfg_model_sub_delete_t (C++ class), 413
esp_ble_mesh_cfg_model_sub_delete_t::company_id (C++ member), 413
esp_ble_mesh_cfg_model_sub_delete_t::element_addr (C++ member), 413
esp_ble_mesh_cfg_model_sub_delete_t::model_id (C++ member), 413
esp_ble_mesh_cfg_model_sub_delete_t::sub_addr (C++ member), 413
esp_ble_mesh_cfg_model_sub_list_cb_t (C++ class), 421
esp_ble_mesh_cfg_model_sub_list_cb_t::company_id (C++ member), 421
esp_ble_mesh_cfg_model_sub_list_cb_t::element_addr (C++ member), 421
esp_ble_mesh_cfg_model_sub_list_cb_t::model_id (C++ member), 421
esp_ble_mesh_cfg_model_sub_list_cb_t::status (C++ member), 421
esp_ble_mesh_cfg_model_sub_list_cb_t::sub_addr (C++ member), 421
esp_ble_mesh_cfg_model_sub_overwrite_t (C++ class), 413
esp_ble_mesh_cfg_model_sub_overwrite_t::company_id (C++ member), 413
esp_ble_mesh_cfg_model_sub_overwrite_t::element_addr (C++ member), 413
esp_ble_mesh_cfg_model_sub_overwrite_t::model_id (C++ member), 413
esp_ble_mesh_cfg_model_sub_overwrite_t::sub_addr (C++ member), 413
esp_ble_mesh_cfg_model_sub_status_cb_t (C++ class), 419
esp_ble_mesh_cfg_model_sub_status_cb_t::company_id (C++ member), 419
esp_ble_mesh_cfg_model_sub_status_cb_t::element_addr (C++ member), 419
esp_ble_mesh_cfg_model_sub_status_cb_t::model_id (C++ member), 419
esp_ble_mesh_cfg_model_sub_status_cb_t::status (C++ member), 419
esp_ble_mesh_cfg_model_sub_status_cb_t::sub_addr (C++ member), 419
esp_ble_mesh_cfg_model_sub_va_add_t (C++ class), 413
esp_ble_mesh_cfg_model_sub_va_add_t::company_id (C++ member), 414
esp_ble_mesh_cfg_model_sub_va_add_t::element_addr (C++ member), 414
esp_ble_mesh_cfg_model_sub_va_add_t::label_uuid (C++ member), 414
esp_ble_mesh_cfg_model_sub_va_add_t::model_id (C++ member), 414
esp_ble_mesh_cfg_model_sub_va_delete_t (C++ class), 414
esp_ble_mesh_cfg_model_sub_va_delete_t::company_id (C++ member), 414
esp_ble_mesh_cfg_model_sub_va_delete_t::element_addr (C++ member), 414
esp_ble_mesh_cfg_model_sub_va_delete_t::label_uuid (C++ member), 414
esp_ble_mesh_cfg_model_sub_va_delete_t::model_id (C++ member), 414
esp_ble_mesh_cfg_model_sub_va_overwrite_t (C++ class), 414
esp_ble_mesh_cfg_model_sub_va_overwrite_t::company_id (C++ member), 414
esp_ble_mesh_cfg_model_sub_va_overwrite_t::element_addr (C++ member), 414
esp_ble_mesh_cfg_model_sub_va_overwrite_t::label_uuid (C++ member), 414
esp_ble_mesh_cfg_model_sub_va_overwrite_t::model_id (C++ member), 414
esp_ble_mesh_cfg_net_key_add_t (C++ class), 411
esp_ble_mesh_cfg_net_key_add_t::net_idx (C++ member), 412
esp_ble_mesh_cfg_net_key_add_t::net_key (C++ member), 412
esp_ble_mesh_cfg_net_key_delete_t (C++ class), 415
esp_ble_mesh_cfg_net_key_delete_t::net_idx (C++ member), 415
esp_ble_mesh_cfg_net_key_list_cb_t (C++ class), 421
esp_ble_mesh_cfg_net_key_list_cb_t::net_idx (C++ member), 421
esp_ble_mesh_cfg_net_key_status_cb_t (C++ class), 419
esp_ble_mesh_cfg_net_key_status_cb_t::net_idx (C++ member), 419
esp_ble_mesh_cfg_net_key_status_cb_t::status (C++ member), 419
esp_ble_mesh_cfg_net_key_update_t (C++ class), 415
esp_ble_mesh_cfg_net_key_update_t::net_idx (C++ member), 415
esp_ble_mesh_cfg_net_key_update_t::net_key (C++ member), 415

esp_ble_mesh_cfg_net_trans_status_cb_t (C++ class), 420
esp_ble_mesh_cfg_net_trans_status_cb_t::net_trans_count (C++ member), 421
esp_ble_mesh_cfg_net_trans_status_cb_t::net_trans_step (C++ member), 421
esp_ble_mesh_cfg_net_transmit_set_t (C++ class), 416
esp_ble_mesh_cfg_net_transmit_set_t::net_transmit (C++ member), 417
esp_ble_mesh_cfg_node_id_status_cb_t (C++ class), 421
esp_ble_mesh_cfg_node_id_status_cb_t::identity (C++ member), 422
esp_ble_mesh_cfg_node_id_status_cb_t::net_idx (C++ member), 422
esp_ble_mesh_cfg_node_id_status_cb_t::status (C++ member), 422
esp_ble_mesh_cfg_node_identity_get_t (C++ class), 410
esp_ble_mesh_cfg_node_identity_get_t::net_idx (C++ member), 410
esp_ble_mesh_cfg_node_identity_set_t (C++ class), 416
esp_ble_mesh_cfg_node_identity_set_t::identity (C++ member), 416
esp_ble_mesh_cfg_node_identity_set_t::net_idx (C++ member), 416
esp_ble_mesh_cfg_relay_set_t (C++ class), 411
esp_ble_mesh_cfg_relay_set_t::relay (C++ member), 411
esp_ble_mesh_cfg_relay_set_t::relay_retransmit (C++ member), 411
esp_ble_mesh_cfg_relay_status_cb_t (C++ class), 418
esp_ble_mesh_cfg_relay_status_cb_t::relay (C++ member), 418
esp_ble_mesh_cfg_relay_status_cb_t::retransmit (C++ member), 418
esp_ble_mesh_cfg_server_cb_event_t (C++ enum), 427
esp_ble_mesh_cfg_server_cb_param_t (C++ class), 426
esp_ble_mesh_cfg_server_cb_param_t::ctx (C++ member), 426
esp_ble_mesh_cfg_server_cb_param_t::model (C++ member), 426
esp_ble_mesh_cfg_server_cb_param_t::value (C++ member), 426
esp_ble_mesh_cfg_server_cb_t (C++ type), 426
esp_ble_mesh_cfg_server_cb_value_t (C++ union), 408
esp_ble_mesh_cfg_server_cb_value_t::state_change (C++ member), 408
ESP_BLE_MESH_CFG_SERVER_EVT_MAX (C++ enumerator), 427
ESP_BLE_MESH_CFG_SERVER_STATE_CHANGE_EVT (C++ enumerator), 427
esp_ble_mesh_cfg_server_state_change_t (C++ union), 407
esp_ble_mesh_cfg_server_state_change_t::appkey_add (C++ member), 407
esp_ble_mesh_cfg_server_state_change_t::appkey_delete (C++ member), 407
esp_ble_mesh_cfg_server_state_change_t::appkey_update (C++ member), 407
esp_ble_mesh_cfg_server_state_change_t::kr_phase_set (C++ member), 408
esp_ble_mesh_cfg_server_state_change_t::mod_app_bind (C++ member), 407
esp_ble_mesh_cfg_server_state_change_t::mod_app_unbind (C++ member), 407
esp_ble_mesh_cfg_server_state_change_t::mod_pub_set (C++ member), 407
esp_ble_mesh_cfg_server_state_change_t::mod_sub_add (C++ member), 407
esp_ble_mesh_cfg_server_state_change_t::mod_sub_delete (C++ member), 407
esp_ble_mesh_cfg_server_state_change_t::netkey_add (C++ member), 407
esp_ble_mesh_cfg_server_state_change_t::netkey_delete (C++ member), 407
esp_ble_mesh_cfg_server_state_change_t::netkey_update (C++ member), 407
esp_ble_mesh_cfg_sig_model_app_get_t (C++ class), 410
esp_ble_mesh_cfg_sig_model_app_get_t::element_addr (C++ member), 410
esp_ble_mesh_cfg_sig_model_app_get_t::model_id (C++ member), 410
esp_ble_mesh_cfg_sig_model_sub_get_t (C++ class), 409
esp_ble_mesh_cfg_sig_model_sub_get_t::element_addr (C++ member), 409
esp_ble_mesh_cfg_sig_model_sub_get_t::model_id (C++ member), 409
esp_ble_mesh_cfg_srv (C++ class), 408
esp_ble_mesh_cfg_srv::beacon (C++ member), 408
esp_ble_mesh_cfg_srv::count (C++ member), 408
esp_ble_mesh_cfg_srv::default_ttl (C++ member), 408
esp_ble_mesh_cfg_srv::dst (C++ member), 408
esp_ble_mesh_cfg_srv::expiry (C++ member), 409
esp_ble_mesh_cfg_srv::feature (C++ member), 408
esp_ble_mesh_cfg_srv::friend_state (C++ member), 408
esp_ble_mesh_cfg_srv::gatt_proxy (C++ member), 408
esp_ble_mesh_cfg_srv::heartbeat_pub

(C++ member), 409
esp_ble_mesh_cfg_srv::heartbeat_recv_cb (C++ member), 409
esp_ble_mesh_cfg_srv::heartbeat_sub (C++ member), 409
esp_ble_mesh_cfg_srv::max_hops (C++ member), 409
esp_ble_mesh_cfg_srv::min_hops (C++ member), 409
esp_ble_mesh_cfg_srv::model (C++ member), 408
esp_ble_mesh_cfg_srv::net_idx (C++ member), 408
esp_ble_mesh_cfg_srv::net_transmit (C++ member), 408
esp_ble_mesh_cfg_srv::period (C++ member), 408
esp_ble_mesh_cfg_srv::relay (C++ member), 408
esp_ble_mesh_cfg_srv::relay_retransmit (C++ member), 408
esp_ble_mesh_cfg_srv::src (C++ member), 409
esp_ble_mesh_cfg_srv::timer (C++ member), 408
esp_ble_mesh_cfg_srv::ttl (C++ member), 408
esp_ble_mesh_cfg_srv_t (C++ type), 426
ESP_BLE_MESH_CFG_STATUS_CANNOT_BIND (C 宏), 372
ESP_BLE_MESH_CFG_STATUS_CANNOT_REMOVE (C 宏), 372
ESP_BLE_MESH_CFG_STATUS_CANNOT_SET (C 宏), 372
ESP_BLE_MESH_CFG_STATUS_CANNOT_UPDATE (C 宏), 372
ESP_BLE_MESH_CFG_STATUS_FEATURE_NOT_SUPPORTED (C 宏), 372
ESP_BLE_MESH_CFG_STATUS_INSUFFICIENT_RESOURCES (C 宏), 372
ESP_BLE_MESH_CFG_STATUS_INVALID_ADDRESS (C 宏), 372
ESP_BLE_MESH_CFG_STATUS_INVALID_APPKEY (C 宏), 372
ESP_BLE_MESH_CFG_STATUS_INVALID_BINDING (C 宏), 372
ESP_BLE_MESH_CFG_STATUS_INVALID_MODEL (C 宏), 372
ESP_BLE_MESH_CFG_STATUS_INVALID_NETKEY (C 宏), 372
ESP_BLE_MESH_CFG_STATUS_INVALID_PUBLISH_PARAMETERS (C 宏), 372
ESP_BLE_MESH_CFG_STATUS_KEY_INDEX_ALREADY_STORED (C 宏), 372
ESP_BLE_MESH_CFG_STATUS_NOT_A_SUBSCRIBE_MODEL (C 宏), 372
ESP_BLE_MESH_CFG_STATUS_STORAGE_FAILURE (C 宏), 372
ESP_BLE_MESH_CFG_STATUS_SUCCESS (C 宏), 372
esp_ble_mesh_cfg_status_t (C++ type), 379
ESP_BLE_MESH_CFG_STATUS_TEMP_UNABLE_TO_CHANGE_STA (C 宏), 372
ESP_BLE_MESH_CFG_STATUS_UNSPECIFIED_ERROR (C 宏), 372
esp_ble_mesh_cfg_vnd_model_app_get_t (C++ class), 410
esp_ble_mesh_cfg_vnd_model_app_get_t::company_id (C++ member), 410
esp_ble_mesh_cfg_vnd_model_app_get_t::element_add (C++ member), 410
esp_ble_mesh_cfg_vnd_model_app_get_t::model_id (C++ member), 410
esp_ble_mesh_cfg_vnd_model_sub_get_t (C++ class), 409
esp_ble_mesh_cfg_vnd_model_sub_get_t::company_id (C++ member), 410
esp_ble_mesh_cfg_vnd_model_sub_get_t::element_add (C++ member), 410
esp_ble_mesh_cfg_vnd_model_sub_get_t::model_id (C++ member), 410
ESP_BLE_MESH_CID_NVAL (C 宏), 364
esp_ble_mesh_client_common_param_t (C++ class), 362
esp_ble_mesh_client_common_param_t::ctx (C++ member), 362
esp_ble_mesh_client_common_param_t::model (C++ member), 362
esp_ble_mesh_client_common_param_t::msg_role (C++ member), 363
esp_ble_mesh_client_common_param_t::msg_timeout (C++ member), 363
esp_ble_mesh_client_common_param_t::opcode (C++ member), 362
esp_ble_mesh_client_model_deinit (C++ function), 390
esp_ble_mesh_client_model_init (C++ function), 390
ESP_BLE_MESH_CLIENT_MODEL_RECV_PUBLISH_MSG_EVT (C++ enumerator), 386
esp_ble_mesh_client_model_send_msg (C++ function), 391
ESP_BLE_MESH_CLIENT_MODEL_SEND_TIMEOUT_EVT (C++ enumerator), 386
esp_ble_mesh_client_op_pair_t (C++ class), 362
esp_ble_mesh_client_op_pair_t::cli_op (C++ member), 362
esp_ble_mesh_client_op_pair_t::status_op (C++ member), 362
esp_ble_mesh_client_t (C++ class), 362
esp_ble_mesh_client_t::internal_data (C++ member), 362
esp_ble_mesh_client_t::model (C++ member), 362
esp_ble_mesh_client_t::msg_role (C++

member), 362
esp_ble_mesh_client_t::op_pair (*C++ member*), 362
esp_ble_mesh_client_t::op_pair_size (*C++ member*), 362
esp_ble_mesh_client_t::publish_status (*C++ member*), 362
esp_ble_mesh_comp_t (*C++ class*), 359
esp_ble_mesh_comp_t::cid (*C++ member*), 359
esp_ble_mesh_comp_t::element_count (*C++ member*), 359
esp_ble_mesh_comp_t::elements (*C++ member*), 359
esp_ble_mesh_comp_t::pid (*C++ member*), 359
esp_ble_mesh_comp_t::vid (*C++ member*), 359
ESP_BLE_MESH_CONDENSATION_ERROR (*C 宏*), 433
ESP_BLE_MESH_CONDENSATION_WARNING (*C 宏*), 433
esp_ble_mesh_config_client_get_state (*C++ function*), 403
esp_ble_mesh_config_client_set_state (*C++ function*), 404
ESP_BLE_MESH_CONFIGURATION_ERROR (*C 宏*), 434
ESP_BLE_MESH_CONFIGURATION_WARNING (*C 宏*), 434
esp_ble_mesh_deinit (*C++ function*), 387
ESP_BLE_MESH_DEINIT_MESH_COMP_EVT (*C++ enumerator*), 385
esp_ble_mesh_deinit_param_t (*C++ class*), 356
esp_ble_mesh_deinit_param_t::erase_flash (*C++ member*), 356
esp_ble_mesh_dev_add_flag_t (*C++ type*), 379
esp_ble_mesh_dev_role_t (*C++ enum*), 381
esp_ble_mesh_device_delete_t (*C++ class*), 360
esp_ble_mesh_device_delete_t::addr (*C++ member*), 360
esp_ble_mesh_device_delete_t::addr_type (*C++ member*), 360
esp_ble_mesh_device_delete_t::flag (*C++ member*), 360
esp_ble_mesh_device_delete_t::uuid (*C++ member*), 360
ESP_BLE_MESH_DEVICE_DROPPED_ERROR (*C 宏*), 434
ESP_BLE_MESH_DEVICE_DROPPED_WARNING (*C 宏*), 434
ESP_BLE_MESH_DEVICE_MOVED_ERROR (*C 宏*), 434
ESP_BLE_MESH_DEVICE_MOVED_WARNING (*C 宏*), 434
ESP_BLE_MESH_DEVICE_NAME_MAX_LEN (*C 宏*), 364
ESP_BLE_MESH_DISPLAY_NUMBER (*C++ enumerator*), 380
ESP_BLE_MESH_DISPLAY_STRING (*C++ enumerator*), 380
esp_ble_mesh_elem_t (*C++ class*), 356
esp_ble_mesh_elem_t::element_addr (*C++ member*), 356
esp_ble_mesh_elem_t::location (*C++ member*), 356
esp_ble_mesh_elem_t::sig_model_count (*C++ member*), 356
esp_ble_mesh_elem_t::sig_models (*C++ member*), 356
esp_ble_mesh_elem_t::vnd_model_count (*C++ member*), 356
esp_ble_mesh_elem_t::vnd_models (*C++ member*), 356
ESP_BLE_MESH_ELEMENT (*C 宏*), 367
ESP_BLE_MESH_ELEMENT_NOT_CALIBRATED_ERROR (*C 宏*), 434
ESP_BLE_MESH_ELEMENT_NOT_CALIBRATED_WARNING (*C 宏*), 434
ESP_BLE_MESH_EMPTY_ERROR (*C 宏*), 434
ESP_BLE_MESH_EMPTY_WARNING (*C 宏*), 434
ESP_BLE_MESH_ENTER_NUMBER (*C++ enumerator*), 381
ESP_BLE_MESH_ENTER_STRING (*C++ enumerator*), 381
esp_ble_mesh_fast_prov_action_t (*C++ enum*), 381
esp_ble_mesh_fast_prov_info_t (*C++ class*), 361
esp_ble_mesh_fast_prov_info_t::flags (*C++ member*), 361
esp_ble_mesh_fast_prov_info_t::iv_index (*C++ member*), 361
esp_ble_mesh_fast_prov_info_t::match_len (*C++ member*), 361
esp_ble_mesh_fast_prov_info_t::match_val (*C++ member*), 361
esp_ble_mesh_fast_prov_info_t::net_idx (*C++ member*), 361
esp_ble_mesh_fast_prov_info_t::offset (*C++ member*), 361
esp_ble_mesh_fast_prov_info_t::unicast_max (*C++ member*), 361
esp_ble_mesh_fast_prov_info_t::unicast_min (*C++ member*), 361
ESP_BLE_MESH_FEATURE_ALL_SUPPORTED (*C 宏*), 365
ESP_BLE_MESH_FEATURE_FRIEND (*C 宏*), 365
ESP_BLE_MESH_FEATURE_LOW_POWER (*C 宏*), 365
ESP_BLE_MESH_FEATURE_PROXY (*C 宏*), 365
ESP_BLE_MESH_FEATURE_RELAY (*C 宏*), 365
esp_ble_mesh_find_element (*C++ function*),

387
esp_ble_mesh_find_sig_model (*C++ function*), 388
esp_ble_mesh_find_vendor_model (*C++ function*), 388
ESP_BLE_MESH_FRIEND_DISABLED (*C 宏*), 365
ESP_BLE_MESH_FRIEND_ENABLED (*C 宏*), 365
ESP_BLE_MESH_FRIEND_FRIENDSHIP_ESTABLISHED (*C++ enumerator*), 384
ESP_BLE_MESH_FRIEND_FRIENDSHIP_TERMINATED (*C++ enumerator*), 384
ESP_BLE_MESH_FRIEND_NOT_SUPPORTED (*C 宏*), 365
ESP_BLE_MESH_GATT_PROXY_DISABLED (*C 宏*), 365
ESP_BLE_MESH_GATT_PROXY_ENABLED (*C 宏*), 365
ESP_BLE_MESH_GATT_PROXY_NOT_SUPPORTED (*C 宏*), 365
ESP_BLE_MESH_GEN_ADMIN_ACCESS_READ (*C++ enumerator*), 465
ESP_BLE_MESH_GEN_ADMIN_ACCESS_READ_WRITE (*C++ enumerator*), 465
ESP_BLE_MESH_GEN_ADMIN_ACCESS_WRITE (*C++ enumerator*), 465
ESP_BLE_MESH_GEN_ADMIN_NOT_USER_PROP (*C++ enumerator*), 465
esp_ble_mesh_gen_admin_prop_access_t (*C++ enum*), 465
esp_ble_mesh_gen_admin_prop_srv_t (*C++ class*), 453
esp_ble_mesh_gen_admin_prop_srv_t::model (*C++ member*), 453
esp_ble_mesh_gen_admin_prop_srv_t::properties (*C++ member*), 453
esp_ble_mesh_gen_admin_prop_srv_t::property_count (*C++ member*), 453
esp_ble_mesh_gen_admin_prop_srv_t::rsp_ctrl (*C++ member*), 453
esp_ble_mesh_gen_admin_properties_status_cb_t (*C++ class*), 447
esp_ble_mesh_gen_admin_properties_status_cb_t::properties (*C++ member*), 447
esp_ble_mesh_gen_admin_property_get_t (*C++ class*), 443
esp_ble_mesh_gen_admin_property_get_t::property_id (*C++ member*), 443
esp_ble_mesh_gen_admin_property_set_t (*C++ class*), 443
esp_ble_mesh_gen_admin_property_set_t::property_id (*C++ member*), 443
esp_ble_mesh_gen_admin_property_set_t::property_value (*C++ member*), 443
esp_ble_mesh_gen_admin_property_set_t::user_access (*C++ member*), 443
esp_ble_mesh_gen_admin_property_status_cb_t (*C++ class*), 447
esp_ble_mesh_gen_admin_property_status_cb_t::admin_property (*C++ member*), 447
esp_ble_mesh_gen_admin_property_status_cb_t::property_id (*C++ member*), 447
esp_ble_mesh_gen_admin_property_status_cb_t::property_value (*C++ member*), 447
esp_ble_mesh_gen_admin_property_status_cb_t::user_access (*C++ member*), 447
esp_ble_mesh_gen_battery_srv_t (*C++ class*), 451
esp_ble_mesh_gen_battery_srv_t::model (*C++ member*), 452
esp_ble_mesh_gen_battery_srv_t::rsp_ctrl (*C++ member*), 452
esp_ble_mesh_gen_battery_srv_t::state (*C++ member*), 452
esp_ble_mesh_gen_battery_state_t (*C++ class*), 451
esp_ble_mesh_gen_battery_state_t::battery_flags (*C++ member*), 451
esp_ble_mesh_gen_battery_state_t::battery_level (*C++ member*), 451
esp_ble_mesh_gen_battery_state_t::time_to_charge (*C++ member*), 451
esp_ble_mesh_gen_battery_state_t::time_to_discharge (*C++ member*), 451
esp_ble_mesh_gen_battery_status_cb_t (*C++ class*), 445
esp_ble_mesh_gen_battery_status_cb_t::battery_level (*C++ member*), 446
esp_ble_mesh_gen_battery_status_cb_t::flags (*C++ member*), 446
esp_ble_mesh_gen_battery_status_cb_t::time_to_charge (*C++ member*), 446
esp_ble_mesh_gen_battery_status_cb_t::time_to_discharge (*C++ member*), 446
esp_ble_mesh_gen_client_prop_srv_t (*C++ class*), 454
esp_ble_mesh_gen_client_prop_srv_t::id_count (*C++ member*), 454
esp_ble_mesh_gen_client_prop_srv_t::model (*C++ member*), 454
esp_ble_mesh_gen_client_prop_srv_t::property_ids (*C++ member*), 454
esp_ble_mesh_gen_client_prop_srv_t::rsp_ctrl (*C++ member*), 454
esp_ble_mesh_gen_client_properties_get_t (*C++ class*), 444
esp_ble_mesh_gen_client_properties_get_t::properties (*C++ member*), 444
esp_ble_mesh_gen_client_properties_status_cb_t (*C++ class*), 448
esp_ble_mesh_gen_client_properties_status_cb_t::properties (*C++ member*), 448
esp_ble_mesh_gen_client_status_cb_t (*C++ union*), 437
esp_ble_mesh_gen_client_status_cb_t::admin_property (*C++ member*), 438
esp_ble_mesh_gen_client_status_cb_t::admin_properties

(C++ member), 438
esp_ble_mesh_gen_client_status_cb_t::battery_status (C++ member), 438
esp_ble_mesh_gen_client_status_cb_t::client_status_cb_t (C++ member), 438
esp_ble_mesh_gen_client_status_cb_t::default_trans_time (C++ member), 437
esp_ble_mesh_gen_client_status_cb_t::level_status (C++ member), 437
esp_ble_mesh_gen_client_status_cb_t::location_global_status (C++ member), 438
esp_ble_mesh_gen_client_status_cb_t::location_local_status (C++ member), 438
esp_ble_mesh_gen_client_status_cb_t::manufacturer_properties_status (C++ member), 438
esp_ble_mesh_gen_client_status_cb_t::manufacturer_property_status (C++ member), 438
esp_ble_mesh_gen_client_status_cb_t::onoff_status (C++ member), 437
esp_ble_mesh_gen_client_status_cb_t::onpowerup_status (C++ member), 437
esp_ble_mesh_gen_client_status_cb_t::power_level_status (C++ member), 438
esp_ble_mesh_gen_client_status_cb_t::power_last_status (C++ member), 438
esp_ble_mesh_gen_client_status_cb_t::power_level_status (C++ member), 437
esp_ble_mesh_gen_client_status_cb_t::power_range_status (C++ member), 438
esp_ble_mesh_gen_client_status_cb_t::user_property_status (C++ member), 438
esp_ble_mesh_gen_client_status_cb_t::user_properties_status (C++ member), 438
esp_ble_mesh_gen_def_trans_time_set_t (C++ class), 441
esp_ble_mesh_gen_def_trans_time_set_t::trans_time (C++ member), 441
esp_ble_mesh_gen_def_trans_time_srv_t (C++ class), 449
esp_ble_mesh_gen_def_trans_time_srv_t::model (C++ member), 449
esp_ble_mesh_gen_def_trans_time_srv_t::rsp_ctrl (C++ member), 449
esp_ble_mesh_gen_def_trans_time_state_t (C++ class), 449
esp_ble_mesh_gen_def_trans_time_state_t::trans_time (C++ member), 449
esp_ble_mesh_gen_def_trans_time_status_cb_t (C++ class), 444
esp_ble_mesh_gen_def_trans_time_status_cb_t::time (C++ member), 445
esp_ble_mesh_gen_delta_set_t (C++ class), 441
esp_ble_mesh_gen_delta_set_t::delay (C++ member), 441
esp_ble_mesh_gen_delta_set_t::level (C++ member), 441
esp_ble_mesh_gen_delta_set_t::op_en (C++ member), 441
esp_ble_mesh_gen_delta_set_t::tid (C++ member), 441
esp_ble_mesh_gen_delta_set_t::trans_time (C++ member), 441
esp_ble_mesh_gen_level_set_t (C++ class), 440
esp_ble_mesh_gen_level_set_t::delay (C++ member), 441
esp_ble_mesh_gen_level_set_t::level (C++ member), 440
esp_ble_mesh_gen_level_set_t::op_en (C++ member), 440
esp_ble_mesh_gen_level_set_t::tid (C++ member), 441
esp_ble_mesh_gen_level_set_t::trans_time (C++ member), 441
esp_ble_mesh_gen_level_srv_t (C++ class), 449
esp_ble_mesh_gen_level_srv_t::last (C++ member), 449
esp_ble_mesh_gen_level_srv_t::model (C++ member), 449
esp_ble_mesh_gen_level_srv_t::rsp_ctrl (C++ member), 449
esp_ble_mesh_gen_level_srv_t::state (C++ member), 449
esp_ble_mesh_gen_level_srv_t::transition (C++ member), 449
esp_ble_mesh_gen_level_srv_t::tt_delta_level (C++ member), 449
esp_ble_mesh_gen_level_state_t (C++ class), 448
esp_ble_mesh_gen_level_state_t::last_delta (C++ member), 449
esp_ble_mesh_gen_level_state_t::last_level (C++ member), 449
esp_ble_mesh_gen_level_state_t::level (C++ member), 449
esp_ble_mesh_gen_level_state_t::move_start (C++ member), 449
esp_ble_mesh_gen_level_state_t::positive (C++ member), 449
esp_ble_mesh_gen_level_state_t::target_level (C++ member), 449
esp_ble_mesh_gen_level_status_cb_t (C++ class), 444
esp_ble_mesh_gen_level_status_cb_t::op_en (C++ member), 444
esp_ble_mesh_gen_level_status_cb_t::present_level (C++ member), 444
esp_ble_mesh_gen_level_status_cb_t::remain_time (C++ member), 444
esp_ble_mesh_gen_level_status_cb_t::target_level (C++ member), 444
esp_ble_mesh_gen_loc_global_set_t

(C++ class), 442
esp_ble_mesh_gen_loc_global_set_t::global_altitude (C++ member), 442
esp_ble_mesh_gen_loc_global_set_t::global_latitude (C++ member), 442
esp_ble_mesh_gen_loc_global_set_t::global_longitude (C++ member), 442
esp_ble_mesh_gen_loc_global_status_cb_t (C++ class), 446
esp_ble_mesh_gen_loc_global_status_cb_t::global_altitude (C++ member), 446
esp_ble_mesh_gen_loc_global_status_cb_t::global_latitude (C++ member), 446
esp_ble_mesh_gen_loc_global_status_cb_t::global_longitude (C++ member), 446
esp_ble_mesh_gen_loc_local_set_t (C++ class), 442
esp_ble_mesh_gen_loc_local_set_t::floor_number (C++ member), 443
esp_ble_mesh_gen_loc_local_set_t::local_altitude (C++ member), 443
esp_ble_mesh_gen_loc_local_set_t::local_east (C++ member), 443
esp_ble_mesh_gen_loc_local_set_t::local_north (C++ member), 443
esp_ble_mesh_gen_loc_local_set_t::uncertainty (C++ member), 443
esp_ble_mesh_gen_loc_local_status_cb_t (C++ class), 446
esp_ble_mesh_gen_loc_local_status_cb_t::floor_number (C++ member), 446
esp_ble_mesh_gen_loc_local_status_cb_t::local_altitude (C++ member), 446
esp_ble_mesh_gen_loc_local_status_cb_t::local_east (C++ member), 446
esp_ble_mesh_gen_loc_local_status_cb_t::local_north (C++ member), 446
esp_ble_mesh_gen_loc_local_status_cb_t::uncertainty (C++ member), 446
esp_ble_mesh_gen_location_setup_srv_t (C++ class), 452
esp_ble_mesh_gen_location_setup_srv_t::model (C++ member), 452
esp_ble_mesh_gen_location_setup_srv_t::rsp_ctrl (C++ member), 452
esp_ble_mesh_gen_location_setup_srv_t::state (C++ member), 453
esp_ble_mesh_gen_location_srv_t (C++ class), 452
esp_ble_mesh_gen_location_srv_t::model (C++ member), 452
esp_ble_mesh_gen_location_srv_t::rsp_ctrl (C++ member), 452
esp_ble_mesh_gen_location_srv_t::state (C++ member), 452
esp_ble_mesh_gen_location_state_t (C++ class), 452
esp_ble_mesh_gen_location_state_t::floor_number (C++ member), 452
esp_ble_mesh_gen_location_state_t::global_altitude (C++ member), 452
esp_ble_mesh_gen_location_state_t::global_latitude (C++ member), 452
esp_ble_mesh_gen_location_state_t::global_longitude (C++ member), 452
esp_ble_mesh_gen_location_state_t::local_altitude (C++ member), 452
esp_ble_mesh_gen_location_state_t::local_east (C++ member), 452
esp_ble_mesh_gen_location_state_t::local_north (C++ member), 452
esp_ble_mesh_gen_location_state_t::uncertainty (C++ member), 452
ESP_BLE_MESH_GEN_MANU_ACCESS_READ (C++ enumerator), 466
ESP_BLE_MESH_GEN_MANU_NOT_USER_PROP (C++ enumerator), 465
esp_ble_mesh_gen_manu_prop_access_t (C++ enum), 465
esp_ble_mesh_gen_manu_prop_srv_t (C++ class), 453
esp_ble_mesh_gen_manu_prop_srv_t::model (C++ member), 454
esp_ble_mesh_gen_manu_prop_srv_t::properties (C++ member), 454
esp_ble_mesh_gen_manu_prop_srv_t::property_count (C++ member), 454
esp_ble_mesh_gen_manu_prop_srv_t::rsp_ctrl (C++ member), 454
esp_ble_mesh_gen_manufacturer_properties_status_c (C++ class), 447
esp_ble_mesh_gen_manufacturer_properties_status_c (C++ member), 447
esp_ble_mesh_gen_manufacturer_property_get_t (C++ class), 443
esp_ble_mesh_gen_manufacturer_property_get_t::pro (C++ member), 444
esp_ble_mesh_gen_manufacturer_property_set_t (C++ class), 444
esp_ble_mesh_gen_manufacturer_property_set_t::pro (C++ member), 444
esp_ble_mesh_gen_manufacturer_property_set_t::use (C++ member), 444
esp_ble_mesh_gen_manufacturer_property_status_cb_ (C++ class), 447
esp_ble_mesh_gen_manufacturer_property_status_cb_ (C++ member), 447
esp_ble_mesh_gen_manufacturer_property_status_cb_ (C++ member), 447
esp_ble_mesh_gen_manufacturer_property_status_cb_ (C++ member), 447
esp_ble_mesh_gen_move_set_t (C++ class), 441
esp_ble_mesh_gen_move_set_t::delay

(C++ member), 441
esp_ble_mesh_gen_move_set_t::delta_level (C++ member), 441
esp_ble_mesh_gen_move_set_t::op_en (C++ member), 441
esp_ble_mesh_gen_move_set_t::tid (C++ member), 441
esp_ble_mesh_gen_move_set_t::trans_time (C++ member), 441
esp_ble_mesh_gen_onoff_set_t (C++ class), 440
esp_ble_mesh_gen_onoff_set_t::delay (C++ member), 440
esp_ble_mesh_gen_onoff_set_t::onoff (C++ member), 440
esp_ble_mesh_gen_onoff_set_t::op_en (C++ member), 440
esp_ble_mesh_gen_onoff_set_t::tid (C++ member), 440
esp_ble_mesh_gen_onoff_set_t::trans_time (C++ member), 440
esp_ble_mesh_gen_onoff_srv_t (C++ class), 448
esp_ble_mesh_gen_onoff_srv_t::last (C++ member), 448
esp_ble_mesh_gen_onoff_srv_t::model (C++ member), 448
esp_ble_mesh_gen_onoff_srv_t::rsp_ctrl (C++ member), 448
esp_ble_mesh_gen_onoff_srv_t::state (C++ member), 448
esp_ble_mesh_gen_onoff_srv_t::transition (C++ member), 448
esp_ble_mesh_gen_onoff_state_t (C++ class), 448
esp_ble_mesh_gen_onoff_state_t::onoff (C++ member), 448
esp_ble_mesh_gen_onoff_state_t::target_onoff (C++ member), 448
esp_ble_mesh_gen_onoff_status_cb_t (C++ class), 444
esp_ble_mesh_gen_onoff_status_cb_t::op_en (C++ member), 444
esp_ble_mesh_gen_onoff_status_cb_t::present_onoff (C++ member), 444
esp_ble_mesh_gen_onoff_status_cb_t::remain_time (C++ member), 444
esp_ble_mesh_gen_onoff_status_cb_t::target_onoff (C++ member), 444
esp_ble_mesh_gen_onpowerup_set_t (C++ class), 441
esp_ble_mesh_gen_onpowerup_set_t::onpowerup (C++ member), 442
esp_ble_mesh_gen_onpowerup_state_t (C++ class), 450
esp_ble_mesh_gen_onpowerup_state_t::onpowerup (C++ member), 450
esp_ble_mesh_gen_onpowerup_status_cb_t (C++ class), 445
esp_ble_mesh_gen_onpowerup_status_cb_t::onpowerup (C++ member), 445
esp_ble_mesh_gen_power_default_set_t (C++ class), 442
esp_ble_mesh_gen_power_default_set_t::power (C++ member), 442
esp_ble_mesh_gen_power_default_status_cb_t (C++ class), 445
esp_ble_mesh_gen_power_default_status_cb_t::power (C++ member), 445
esp_ble_mesh_gen_power_last_status_cb_t (C++ class), 445
esp_ble_mesh_gen_power_last_status_cb_t::power (C++ member), 445
esp_ble_mesh_gen_power_level_set_t (C++ class), 442
esp_ble_mesh_gen_power_level_set_t::delay (C++ member), 442
esp_ble_mesh_gen_power_level_set_t::op_en (C++ member), 442
esp_ble_mesh_gen_power_level_set_t::power (C++ member), 442
esp_ble_mesh_gen_power_level_set_t::tid (C++ member), 442
esp_ble_mesh_gen_power_level_set_t::trans_time (C++ member), 442
esp_ble_mesh_gen_power_level_setup_srv_t (C++ class), 451
esp_ble_mesh_gen_power_level_setup_srv_t::model (C++ member), 451
esp_ble_mesh_gen_power_level_setup_srv_t::rsp_ctrl (C++ member), 451
esp_ble_mesh_gen_power_level_setup_srv_t::state (C++ member), 451
esp_ble_mesh_gen_power_level_srv_t (C++ class), 451
esp_ble_mesh_gen_power_level_srv_t::last (C++ member), 451
esp_ble_mesh_gen_power_level_srv_t::model (C++ member), 451
esp_ble_mesh_gen_power_level_srv_t::rsp_ctrl (C++ member), 451
esp_ble_mesh_gen_power_level_srv_t::state (C++ member), 451
esp_ble_mesh_gen_power_level_srv_t::transition (C++ member), 451
esp_ble_mesh_gen_power_level_srv_t::tt_delta_level (C++ member), 451
esp_ble_mesh_gen_power_level_state_t (C++ class), 450
esp_ble_mesh_gen_power_level_state_t::power_actual (C++ member), 450
esp_ble_mesh_gen_power_level_state_t::power_default (C++ member), 450
esp_ble_mesh_gen_power_level_state_t::power_last (C++ member), 450
esp_ble_mesh_gen_power_level_state_t::power_range

(C++ member), 451
esp_ble_mesh_gen_power_level_state_t::power_range_max (C++ member), 450
esp_ble_mesh_gen_power_level_state_t::status_code (C++ member), 450
esp_ble_mesh_gen_power_level_state_t::target_power_actual (C++ member), 450
esp_ble_mesh_gen_power_level_status_cb_t (C++ class), 445
esp_ble_mesh_gen_power_level_status_cb_t::dtt_rem (C++ member), 445
esp_ble_mesh_gen_power_level_status_cb_t::present_power (C++ member), 445
esp_ble_mesh_gen_power_level_status_cb_t::remain_time (C++ member), 445
esp_ble_mesh_gen_power_level_status_cb_t::target_power (C++ member), 445
esp_ble_mesh_gen_power_onoff_setup_srv_t (C++ class), 450
esp_ble_mesh_gen_power_onoff_setup_srv_t::model (C++ member), 450
esp_ble_mesh_gen_power_onoff_setup_srv_t::rsp_ctrl (C++ member), 450
esp_ble_mesh_gen_power_onoff_setup_srv_t::state (C++ member), 450
esp_ble_mesh_gen_power_onoff_srv_t (C++ class), 450
esp_ble_mesh_gen_power_onoff_srv_t::model (C++ member), 450
esp_ble_mesh_gen_power_onoff_srv_t::rsp_ctrl (C++ member), 450
esp_ble_mesh_gen_power_onoff_srv_t::state (C++ member), 450
esp_ble_mesh_gen_power_range_set_t (C++ class), 442
esp_ble_mesh_gen_power_range_set_t::range_max (C++ member), 442
esp_ble_mesh_gen_power_range_set_t::range_min (C++ member), 442
esp_ble_mesh_gen_power_range_status_cb_t (C++ class), 445
esp_ble_mesh_gen_power_range_status_cb_t::range_max (C++ member), 445
esp_ble_mesh_gen_power_range_status_cb_t::range_min (C++ member), 445
esp_ble_mesh_gen_power_range_status_cb_t::status_code (C++ member), 445
ESP_BLE_MESH_GEN_USER_ACCESS_PROHIBIT (C++ enumerator), 465
ESP_BLE_MESH_GEN_USER_ACCESS_READ (C++ enumerator), 465
ESP_BLE_MESH_GEN_USER_ACCESS_READ_WRITE (C++ enumerator), 465
ESP_BLE_MESH_GEN_USER_ACCESS_WRITE (C++ enumerator), 465
esp_ble_mesh_gen_user_prop_access_t (C++ enum), 465
esp_ble_mesh_gen_user_prop_srv_t (C++ class), 453
esp_ble_mesh_gen_user_prop_srv_t::model (C++ member), 453
esp_ble_mesh_gen_user_prop_srv_t::properties (C++ member), 453
esp_ble_mesh_gen_user_prop_srv_t::property_count (C++ member), 453
esp_ble_mesh_gen_user_prop_srv_t::rsp_ctrl (C++ member), 453
esp_ble_mesh_gen_user_properties_status_cb_t (C++ class), 446
esp_ble_mesh_gen_user_properties_status_cb_t::properties (C++ member), 446
esp_ble_mesh_gen_user_property_get_t (C++ class), 443
esp_ble_mesh_gen_user_property_get_t::property_id (C++ member), 443
esp_ble_mesh_gen_user_property_set_t (C++ class), 443
esp_ble_mesh_gen_user_property_set_t::property_id (C++ member), 443
esp_ble_mesh_gen_user_property_set_t::property_val (C++ member), 443
esp_ble_mesh_gen_user_property_status_cb_t (C++ class), 446
esp_ble_mesh_gen_user_property_status_cb_t::op_en (C++ member), 447
esp_ble_mesh_gen_user_property_status_cb_t::prope (C++ member), 447
esp_ble_mesh_gen_user_property_status_cb_t::prope (C++ member), 447
esp_ble_mesh_gen_user_property_status_cb_t::user_ (C++ member), 447
esp_ble_mesh_generic_client_cb_event_t (C++ enum), 465
esp_ble_mesh_generic_client_cb_param_t (C++ class), 448
esp_ble_mesh_generic_client_cb_param_t::error_cod (C++ member), 448
esp_ble_mesh_generic_client_cb_param_t::params (C++ member), 448
esp_ble_mesh_generic_client_cb_param_t::status_cb (C++ member), 448
esp_ble_mesh_generic_client_cb_t (C++ type), 465
ESP_BLE_MESH_GENERIC_CLIENT_EVT_MAX (C++ enumerator), 465
esp_ble_mesh_generic_client_get_state (C++ function), 436
ESP_BLE_MESH_GENERIC_CLIENT_GET_STATE_EVT (C++ enumerator), 465
esp_ble_mesh_generic_client_get_state_t (C++ union), 436
esp_ble_mesh_generic_client_get_state_t::admin_pr (C++ member), 436
esp_ble_mesh_generic_client_get_state_t::client_p (C++ member), 436
esp_ble_mesh_generic_client_get_state_t::manufact

(C++ member), 436
esp_ble_mesh_generic_client_get_state_t::user_property_get (C++ member), 436
ESP_BLE_MESH_GENERIC_CLIENT_PUBLISH_EVT (C++ enumerator), 465
esp_ble_mesh_generic_client_set_state (C++ function), 436
ESP_BLE_MESH_GENERIC_CLIENT_SET_STATE_EVT (C++ enumerator), 465
esp_ble_mesh_generic_client_set_state_t (C++ union), 436
esp_ble_mesh_generic_client_set_state_t::admin_property_set (C++ member), 437
esp_ble_mesh_generic_client_set_state_t::default_trans_time_set (C++ member), 437
esp_ble_mesh_generic_client_set_state_t::delta_set (C++ member), 437
esp_ble_mesh_generic_client_set_state_t::level_set (C++ member), 436
esp_ble_mesh_generic_client_set_state_t::location_global_set (C++ member), 437
esp_ble_mesh_generic_client_set_state_t::location_local_set (C++ member), 437
esp_ble_mesh_generic_client_set_state_t::manufacturer_property_set (C++ member), 437
esp_ble_mesh_generic_client_set_state_t::move_set (C++ member), 437
esp_ble_mesh_generic_client_set_state_t::onoff_set (C++ member), 436
esp_ble_mesh_generic_client_set_state_t::power_default_set (C++ member), 437
esp_ble_mesh_generic_client_set_state_t::power_level_set (C++ member), 437
esp_ble_mesh_generic_client_set_state_t::power_range_set (C++ member), 437
esp_ble_mesh_generic_client_set_state_t::user_property_set (C++ member), 437
ESP_BLE_MESH_GENERIC_CLIENT_TIMEOUT_EVT (C++ enumerator), 465
ESP_BLE_MESH_GENERIC_LEVEL_STATE (C++ enumerator), 385
esp_ble_mesh_generic_message_opcode_t (C++ type), 379
ESP_BLE_MESH_GENERIC_ONOFF_STATE (C++ enumerator), 385
ESP_BLE_MESH_GENERIC_ONPOWERUP_STATE (C++ enumerator), 385
ESP_BLE_MESH_GENERIC_POWER_ACTUAL_STATE (C++ enumerator), 385
esp_ble_mesh_generic_property_t (C++ class), 453
esp_ble_mesh_generic_property_t::admin_access (C++ member), 453
esp_ble_mesh_generic_property_t::id (C++ member), 453
esp_ble_mesh_generic_property_t::manu_access (C++ member), 453
esp_ble_mesh_generic_property_t::user_access (C++ member), 453
esp_ble_mesh_generic_property_t::val (C++ member), 453
esp_ble_mesh_generic_server_cb_event_t (C++ enum), 466
esp_ble_mesh_generic_server_cb_param_t (C++ class), 461
esp_ble_mesh_generic_server_cb_param_t::ctx (C++ member), 461
esp_ble_mesh_generic_server_cb_param_t::model (C++ member), 461
esp_ble_mesh_generic_server_cb_param_t::value (C++ member), 461
esp_ble_mesh_generic_server_cb_t (C++ type), 465
esp_ble_mesh_generic_server_cb_value_t (C++ union), 440
esp_ble_mesh_generic_server_cb_value_t::get (C++ member), 440
esp_ble_mesh_generic_server_cb_value_t::set (C++ member), 440
esp_ble_mesh_generic_server_cb_value_t::state_change (C++ member), 440
ESP_BLE_MESH_GENERIC_SERVER_EVT_MAX (C++ enumerator), 466
ESP_BLE_MESH_GENERIC_SERVER_RECV_GET_MSG_EVT (C++ enumerator), 466
esp_ble_mesh_generic_server_recv_get_msg_t (C++ union), 439
esp_ble_mesh_generic_server_recv_get_msg_t::admin_property_get (C++ member), 439
esp_ble_mesh_generic_server_recv_get_msg_t::client_get (C++ member), 439
esp_ble_mesh_generic_server_recv_get_msg_t::manu_property_get (C++ member), 439
esp_ble_mesh_generic_server_recv_get_msg_t::user_property_get (C++ member), 439
ESP_BLE_MESH_GENERIC_SERVER_RECV_SET_MSG_EVT (C++ enumerator), 466
esp_ble_mesh_generic_server_recv_set_msg_t (C++ union), 439
esp_ble_mesh_generic_server_recv_set_msg_t::admin_property_set (C++ member), 440
esp_ble_mesh_generic_server_recv_set_msg_t::def_trans_time_set (C++ member), 439
esp_ble_mesh_generic_server_recv_set_msg_t::delta_set (C++ member), 439
esp_ble_mesh_generic_server_recv_set_msg_t::level_set (C++ member), 439
esp_ble_mesh_generic_server_recv_set_msg_t::location_global_set (C++ member), 440
esp_ble_mesh_generic_server_recv_set_msg_t::location_local_set (C++ member), 440
esp_ble_mesh_generic_server_recv_set_msg_t::manu_property_set (C++ member), 440
esp_ble_mesh_generic_server_recv_set_msg_t::move_set

(*C++ member*), 439
esp_ble_mesh_generic_server_recv_set_msg_t::lon_mesh_get_sensor_data_format (*C++ member*), 439
esp_ble_mesh_generic_server_recv_set_msg_t::lon_mesh_get_sensor_data_length (*C++ member*), 439
esp_ble_mesh_generic_server_recv_set_msg_t::lon_mesh_get_sensor_data_property_id (*C++ member*), 439
esp_ble_mesh_generic_server_recv_set_msg_t::lon_mesh_get_transmit_count (*C++ member*), 439
esp_ble_mesh_generic_server_recv_set_msg_t::lon_mesh_get_transmit_interval (*C++ member*), 439
esp_ble_mesh_generic_server_recv_set_msg_t::user_property (*C++ member*), 440
ESP_BLE_MESH_GENERIC_SERVER_STATE_CHANGE_EVT (*C++ enumerator*), 466
esp_ble_mesh_generic_server_state_change_t (*C++ union*), 438
esp_ble_mesh_generic_server_state_change_t::admin_property_set (*C++ member*), 439
esp_ble_mesh_generic_server_state_change_t::defresh_health_time (*C++ member*), 438
esp_ble_mesh_generic_server_state_change_t::delta_set (*C++ member*), 438
esp_ble_mesh_generic_server_state_change_t::level_set (*C++ member*), 438
esp_ble_mesh_generic_server_state_change_t::local_set (*C++ member*), 439
esp_ble_mesh_generic_server_state_change_t::mesh_health_attention_status_cb_t (*C++ member*), 439
esp_ble_mesh_generic_server_state_change_t::mesh_health_attention_status_cb_t::attent (*C++ member*), 439
esp_ble_mesh_generic_server_state_change_t::name_property_set (*C++ member*), 439
esp_ble_mesh_generic_server_state_change_t::move_set (*C++ member*), 438
esp_ble_mesh_generic_server_state_change_t::onoff_set (*C++ member*), 438
esp_ble_mesh_generic_server_state_change_t::onpowerup_set (*C++ member*), 438
esp_ble_mesh_generic_server_state_change_t::power_default_set (*C++ member*), 438
esp_ble_mesh_generic_server_state_change_t::power_level_set (*C++ member*), 438
esp_ble_mesh_generic_server_state_change_t::power_range_set (*C++ member*), 439
esp_ble_mesh_generic_server_state_change_t::user_property_set (*C++ member*), 439
esp_ble_mesh_get_composition_data (*C++ function*), 388
esp_ble_mesh_get_element_count (*C++ function*), 387
esp_ble_mesh_get_fast_prov_app_key (*C++ function*), 397
esp_ble_mesh_get_model_publish_period (*C++ function*), 387
esp_ble_mesh_get_primary_element_address (*C++ function*), 387
ESP_BLE_MESH_GET_PUBLISH_TRANSMIT_COUNT (*C 宏*), 366
ESP_BLE_MESH_GET_PUBLISH_TRANSMIT_INTERVAL (*C 宏*), 366
ESP_BLE_MESH_GET_SENSOR_DATA_FORMAT (*C 宏*), 479
ESP_BLE_MESH_GET_SENSOR_DATA_LENGTH (*C 宏*), 479
ESP_BLE_MESH_GET_SENSOR_DATA_PROPERTY_ID (*C 宏*), 479
ESP_BLE_MESH_GET_TRANSMIT_COUNT (*C 宏*), 366
ESP_BLE_MESH_GET_TRANSMIT_INTERVAL (*C 宏*), 366
esp_ble_mesh_health_attention_off_cb_t (*C++ class*), 432
esp_ble_mesh_health_attention_off_cb_t::model (*C++ member*), 433
esp_ble_mesh_health_attention_on_cb_t (*C++ class*), 432
esp_ble_mesh_health_attention_on_cb_t::model (*C++ member*), 432
esp_ble_mesh_health_attention_on_cb_t::time (*C++ member*), 432
esp_ble_mesh_health_attention_set_t (*C++ class*), 430
esp_ble_mesh_health_attention_set_t::attention (*C++ member*), 430
esp_ble_mesh_health_attention_status_cb_t (*C++ class*), 431
esp_ble_mesh_health_attention_status_cb_t::attent (*C++ member*), 431
esp_ble_mesh_health_client_cb_event_t (*C++ enum*), 435
esp_ble_mesh_health_client_cb_param_t (*C++ class*), 431
esp_ble_mesh_health_client_cb_param_t::error_code (*C++ member*), 432
esp_ble_mesh_health_client_cb_param_t::params (*C++ member*), 432
esp_ble_mesh_health_client_cb_param_t::status_cb (*C++ member*), 432
esp_ble_mesh_health_client_cb_t (*C++ type*), 435
esp_ble_mesh_health_client_common_cb_param_t (*C++ union*), 428
esp_ble_mesh_health_client_common_cb_param_t::att (*C++ member*), 429
esp_ble_mesh_health_client_common_cb_param_t::cur (*C++ member*), 428
esp_ble_mesh_health_client_common_cb_param_t::fau (*C++ member*), 428
esp_ble_mesh_health_client_common_cb_param_t::per (*C++ member*), 429
ESP_BLE_MESH_HEALTH_CLIENT_EVT_MAX (*C++ enumerator*), 435
esp_ble_mesh_health_client_get_state (*C++ function*), 427
ESP_BLE_MESH_HEALTH_CLIENT_GET_STATE_EVT (*C++ enumerator*), 435
esp_ble_mesh_health_client_get_state_t

(C++ union), 428
esp_ble_mesh_health_client_get_state_t::fault_get (C++ member), 428
ESP_BLE_MESH_HEALTH_CLIENT_PUBLISH_EVT (C++ enumerator), 435
esp_ble_mesh_health_client_set_state (C++ function), 427
ESP_BLE_MESH_HEALTH_CLIENT_SET_STATE_EVT (C++ enumerator), 435
esp_ble_mesh_health_client_set_state_t (C++ union), 428
esp_ble_mesh_health_client_set_state_t::app_idx (C++ member), 428
esp_ble_mesh_health_client_set_state_t::fault_clear (C++ member), 428
esp_ble_mesh_health_client_set_state_t::fault_test (C++ member), 428
esp_ble_mesh_health_client_set_state_t::period_set (C++ member), 428
ESP_BLE_MESH_HEALTH_CLIENT_TIMEOUT_EVT (C++ enumerator), 435
esp_ble_mesh_health_current_status_cb_t (C++ class), 431
esp_ble_mesh_health_current_status_cb_t::company_id (C++ member), 431
esp_ble_mesh_health_current_status_cb_t::fault_array (C++ member), 431
esp_ble_mesh_health_current_status_cb_t::test_id (C++ member), 431
ESP_BLE_MESH_HEALTH_FAULT_ARRAY_SIZE (C 宏), 434
esp_ble_mesh_health_fault_clear_cb_t (C++ class), 432
esp_ble_mesh_health_fault_clear_cb_t::company_id (C++ member), 432
esp_ble_mesh_health_fault_clear_cb_t::model (C++ member), 432
esp_ble_mesh_health_fault_clear_t (C++ class), 430
esp_ble_mesh_health_fault_clear_t::company_id (C++ member), 431
esp_ble_mesh_health_fault_get_t (C++ class), 430
esp_ble_mesh_health_fault_get_t::company_id (C++ member), 430
esp_ble_mesh_health_fault_status_cb_t (C++ class), 431
esp_ble_mesh_health_fault_status_cb_t::company_id (C++ member), 431
esp_ble_mesh_health_fault_status_cb_t::fault_array (C++ member), 431
esp_ble_mesh_health_fault_status_cb_t::test_id (C++ member), 431
esp_ble_mesh_health_fault_test_cb_t (C++ class), 432
esp_ble_mesh_health_fault_test_cb_t::company_id (C++ member), 432
esp_ble_mesh_health_fault_test_cb_t::model (C++ member), 432
esp_ble_mesh_health_fault_test_cb_t::test_id (C++ member), 432
esp_ble_mesh_health_fault_test_t (C++ class), 430
esp_ble_mesh_health_fault_test_t::company_id (C++ member), 430
esp_ble_mesh_health_fault_test_t::test_id (C++ member), 430
esp_ble_mesh_health_fault_update_comp_cb_t (C++ class), 432
esp_ble_mesh_health_fault_update_comp_cb_t::element_index (C++ member), 432
esp_ble_mesh_health_fault_update_comp_cb_t::error_code (C++ member), 432
esp_ble_mesh_health_model_status_t (C++ type), 379
esp_ble_mesh_health_period_set_t (C++ class), 430
esp_ble_mesh_health_period_set_t::fast_period_div (C++ member), 430
esp_ble_mesh_health_period_status_cb_t (C++ class), 431
esp_ble_mesh_health_period_status_cb_t::fast_peri (C++ member), 431
ESP_BLE_MESH_HEALTH_PUB_DEFINE (C 宏), 433
ESP_BLE_MESH_HEALTH_SERVER_ATTENTION_OFF_EVT (C++ enumerator), 435
ESP_BLE_MESH_HEALTH_SERVER_ATTENTION_ON_EVT (C++ enumerator), 435
esp_ble_mesh_health_server_cb_event_t (C++ enum), 435
esp_ble_mesh_health_server_cb_param_t (C++ union), 429
esp_ble_mesh_health_server_cb_param_t::attention_ (C++ member), 429
esp_ble_mesh_health_server_cb_param_t::attention_ (C++ member), 429
esp_ble_mesh_health_server_cb_param_t::fault_clea (C++ member), 429
esp_ble_mesh_health_server_cb_param_t::fault_test (C++ member), 429
esp_ble_mesh_health_server_cb_param_t::fault_upda (C++ member), 429
esp_ble_mesh_health_server_cb_t (C++ type), 435
ESP_BLE_MESH_HEALTH_SERVER_EVT_MAX (C++ enumerator), 435
ESP_BLE_MESH_HEALTH_SERVER_FAULT_CLEAR_EVT (C++ enumerator), 435
ESP_BLE_MESH_HEALTH_SERVER_FAULT_TEST_EVT (C++ enumerator), 435
esp_ble_mesh_health_server_fault_update (C++ function), 428
ESP_BLE_MESH_HEALTH_SERVER_FAULT_UPDATE_COMP_EVT (C++ enumerator), 435
esp_ble_mesh_health_srv_cb_t (C++ class),

429
esp_ble_mesh_health_srv_cb_t::attention_off (C++ member), 429
esp_ble_mesh_health_srv_cb_t::attention_on (C++ member), 429
esp_ble_mesh_health_srv_cb_t::fault_clear (C++ member), 429
esp_ble_mesh_health_srv_cb_t::fault_test (C++ member), 429
esp_ble_mesh_health_srv_t (C++ class), 430
esp_ble_mesh_health_srv_t::attention_timer (C++ member), 430
esp_ble_mesh_health_srv_t::attention_timer_start (C++ member), 430
esp_ble_mesh_health_srv_t::health_cb (C++ member), 430
esp_ble_mesh_health_srv_t::health_test (C++ member), 430
esp_ble_mesh_health_srv_t::model (C++ member), 430
ESP_BLE_MESH_HEALTH_STANDARD_TEST (C 宏), 433
esp_ble_mesh_health_test_t (C++ class), 429
esp_ble_mesh_health_test_t::company_id (C++ member), 429
esp_ble_mesh_health_test_t::current_faults (C++ member), 429
esp_ble_mesh_health_test_t::id_count (C++ member), 429
esp_ble_mesh_health_test_t::prev_test_id (C++ member), 429
esp_ble_mesh_health_test_t::registered_faults (C++ member), 430
esp_ble_mesh_health_test_t::test_ids (C++ member), 429
ESP_BLE_MESH_HEARTBEAT_FILTER_ACCEPTLIST (C 宏), 368
ESP_BLE_MESH_HEARTBEAT_FILTER_ADD (C 宏), 368
esp_ble_mesh_heartbeat_filter_info_t (C++ class), 362
esp_ble_mesh_heartbeat_filter_info_t::hb_dst (C++ member), 362
esp_ble_mesh_heartbeat_filter_info_t::hb_src (C++ member), 362
ESP_BLE_MESH_HEARTBEAT_FILTER_REJECTLIST (C 宏), 368
ESP_BLE_MESH_HEARTBEAT_FILTER_REMOVE (C 宏), 368
ESP_BLE_MESH_HEARTBEAT_MESSAGE_RECV_EVT (C++ enumerator), 384
ESP_BLE_MESH_HOUSING_OPENED_ERROR (C 宏), 434
ESP_BLE_MESH_HOUSING_OPENED_WARNING (C 宏), 434
esp_ble_mesh_init (C++ function), 387
esp_ble_mesh_input_action_t (C++ enum), 380
ESP_BLE_MESH_INPUT_NO_CHANGE_ERROR (C 宏), 434
ESP_BLE_MESH_INPUT_NO_CHANGE_WARNING (C 宏), 434
ESP_BLE_MESH_INPUT_OOB (C++ enumerator), 380
ESP_BLE_MESH_INPUT_TOO_HIGH_ERROR (C 宏), 434
ESP_BLE_MESH_INPUT_TOO_HIGH_WARNING (C 宏), 434
ESP_BLE_MESH_INPUT_TOO_LOW_ERROR (C 宏), 434
ESP_BLE_MESH_INPUT_TOO_LOW_WARNING (C 宏), 434
ESP_BLE_MESH_INTERNAL_BUS_ERROR (C 宏), 434
ESP_BLE_MESH_INTERNAL_BUS_WARNING (C 宏), 434
ESP_BLE_MESH_INVALID_NODE_INDEX (C 宏), 365
ESP_BLE_MESH_INVALID_SCENE_NUMBER (C 宏), 500
ESP_BLE_MESH_INVALID_SENSOR_PROPERTY_ID (C 宏), 478
ESP_BLE_MESH_INVALID_SENSOR_SETTING_PROPERTY_ID (C 宏), 478
ESP_BLE_MESH_INVALID_SETTINGS_IDX (C 宏), 364
esp_ble_mesh_is_model_subscribed_to_group (C++ function), 387
ESP_BLE_MESH_KEY_ANY (C 宏), 365
ESP_BLE_MESH_KEY_DEV (C 宏), 365
ESP_BLE_MESH_KEY_PRIMARY (C 宏), 365
ESP_BLE_MESH_KEY_UNUSED (C 宏), 365
esp_ble_mesh_last_msg_info_t (C++ class), 363
esp_ble_mesh_last_msg_info_t::dst (C++ member), 363
esp_ble_mesh_last_msg_info_t::src (C++ member), 363
esp_ble_mesh_last_msg_info_t::tid (C++ member), 363
esp_ble_mesh_last_msg_info_t::timestamp (C++ member), 364
ESP_BLE_MESH_LC_FADE (C++ enumerator), 544
ESP_BLE_MESH_LC_FADE_ON (C++ enumerator), 544
ESP_BLE_MESH_LC_FADE_STANDBY_AUTO (C++ enumerator), 544
ESP_BLE_MESH_LC_FADE_STANDBY_MANUAL (C++ enumerator), 544
ESP_BLE_MESH_LC_OFF (C++ enumerator), 544
ESP_BLE_MESH_LC_PROLONG (C++ enumerator), 544
ESP_BLE_MESH_LC_RUN (C++ enumerator), 544
ESP_BLE_MESH_LC_STANDBY (C++ enumerator), 544

esp_ble_mesh_lc_state_t (*C++ enum*), 544
esp_ble_mesh_light_client_cb_event_t (*C++ enum*), 543
esp_ble_mesh_light_client_cb_param_t (*C++ class*), 520
esp_ble_mesh_light_client_cb_param_t::error_code (*C++ member*), 520
esp_ble_mesh_light_client_cb_param_t::params (*C++ member*), 520
esp_ble_mesh_light_client_cb_param_t::status_cb (*C++ member*), 520
esp_ble_mesh_light_client_cb_t (*C++ type*), 543
ESP_BLE_MESH_LIGHT_CLIENT_EVT_MAX (*C++ enumerator*), 544
esp_ble_mesh_light_client_get_state (*C++ function*), 503
ESP_BLE_MESH_LIGHT_CLIENT_GET_STATE_EVT (*C++ enumerator*), 543
esp_ble_mesh_light_client_get_state_t (*C++ union*), 503
esp_ble_mesh_light_client_get_state_t::ctl_get (*C++ member*), 503
ESP_BLE_MESH_LIGHT_CLIENT_PUBLISH_EVT (*C++ enumerator*), 544
esp_ble_mesh_light_client_set_state (*C++ function*), 503
ESP_BLE_MESH_LIGHT_CLIENT_SET_STATE_EVT (*C++ enumerator*), 543
esp_ble_mesh_light_client_set_state_t (*C++ union*), 503
esp_ble_mesh_light_client_set_state_t::ctl_set (*C++ member*), 504
esp_ble_mesh_light_client_set_state_t::ctl_set_raw (*C++ member*), 504
esp_ble_mesh_light_client_set_state_t::hsl_set (*C++ member*), 504
esp_ble_mesh_light_client_set_state_t::hsl_set_raw (*C++ member*), 504
esp_ble_mesh_light_client_set_state_t::light_hsl_set (*C++ member*), 505
esp_ble_mesh_light_client_set_state_t::light_lightness_set (*C++ member*), 504
esp_ble_mesh_light_client_set_state_t::light_xyl_set (*C++ member*), 505
esp_ble_mesh_light_client_set_state_t::lightness_set (*C++ member*), 504
esp_ble_mesh_light_client_set_state_t::lightness_set_raw (*C++ member*), 504
esp_ble_mesh_light_client_set_state_t::lightness_set_unack (*C++ member*), 504
esp_ble_mesh_light_client_set_state_t::lightness_set_unack_raw (*C++ member*), 504
esp_ble_mesh_light_client_set_state_t::lightness_set_unack_raw (*C++ member*), 505
esp_ble_mesh_light_client_set_state_t::lightness_set_unack_raw (*C++ member*), 505
esp_ble_mesh_light_client_set_state_t::lightness_set_unack_raw (*C++ member*), 505
esp_ble_mesh_light_client_set_state_t::lightness_set_unack_raw (*C++ member*), 505
esp_ble_mesh_light_client_set_state_t::xyl_set (*C++ member*), 505
esp_ble_mesh_light_client_set_state_t::xyl_set_raw (*C++ member*), 505
esp_ble_mesh_light_client_set_state_t::xyl_set_raw (*C++ member*), 505
esp_ble_mesh_light_client_status_cb_t (*C++ union*), 505
esp_ble_mesh_light_client_status_cb_t::ctl_default_status (*C++ member*), 505
esp_ble_mesh_light_client_status_cb_t::ctl_status (*C++ member*), 505
esp_ble_mesh_light_client_status_cb_t::ctl_temperature_range_status (*C++ member*), 505
esp_ble_mesh_light_client_status_cb_t::ctl_temperature_range_status (*C++ member*), 505
esp_ble_mesh_light_client_status_cb_t::hsl_default_status (*C++ member*), 505
esp_ble_mesh_light_client_status_cb_t::hsl_hue_status (*C++ member*), 505
esp_ble_mesh_light_client_status_cb_t::hsl_range_status (*C++ member*), 505
esp_ble_mesh_light_client_status_cb_t::hsl_saturation_status (*C++ member*), 505
esp_ble_mesh_light_client_status_cb_t::hsl_status (*C++ member*), 505
esp_ble_mesh_light_client_status_cb_t::hsl_target_status (*C++ member*), 505
esp_ble_mesh_light_client_status_cb_t::lc_light_onoff_status (*C++ member*), 506
esp_ble_mesh_light_client_status_cb_t::lc_mode_status (*C++ member*), 506
esp_ble_mesh_light_client_status_cb_t::lc_om_status (*C++ member*), 506
esp_ble_mesh_light_client_status_cb_t::lc_property_status (*C++ member*), 506
esp_ble_mesh_light_client_status_cb_t::lightness_range_status (*C++ member*), 505
esp_ble_mesh_light_client_status_cb_t::lightness_status (*C++ member*), 505
esp_ble_mesh_light_client_status_cb_t::lightness_target_status (*C++ member*), 505
esp_ble_mesh_light_client_status_cb_t::lightness_status (*C++ member*), 505
esp_ble_mesh_light_client_status_cb_t::lightness_target_status (*C++ member*), 505
esp_ble_mesh_light_client_status_cb_t::xyl_default_status (*C++ member*), 506
esp_ble_mesh_light_client_status_cb_t::xyl_range_status (*C++ member*), 506
esp_ble_mesh_light_client_status_cb_t::xyl_status

(C++ member), 505
esp_ble_mesh_light_client_status_cb_t::ctl_lightness_get (C++ member), 505
esp_ble_mesh_light_client_status_cb_t::ctl_lightness_set (C++ member), 505
ESP_BLE_MESH_LIGHT_CLIENT_TIMEOUT_EVT (C++ enumerator), 544
esp_ble_mesh_light_control_t (C++ class), 529
esp_ble_mesh_light_control_t::prop_state (C++ member), 529
esp_ble_mesh_light_control_t::state (C++ member), 529
esp_ble_mesh_light_control_t::state_machine (C++ member), 529
esp_ble_mesh_light_ctl_default_set_t (C++ class), 510
esp_ble_mesh_light_ctl_default_set_t::delta_uv (C++ member), 510
esp_ble_mesh_light_ctl_default_set_t::lightness (C++ member), 510
esp_ble_mesh_light_ctl_default_set_t::temperature (C++ member), 510
esp_ble_mesh_light_ctl_default_status_cb_t (C++ class), 516
esp_ble_mesh_light_ctl_default_status_cb_t::delta_uv (C++ member), 516
esp_ble_mesh_light_ctl_default_status_cb_t::lightness (C++ member), 516
esp_ble_mesh_light_ctl_default_status_cb_t::temperature (C++ member), 516
ESP_BLE_MESH_LIGHT_CTL_LIGHTNESS_STATE (C++ enumerator), 386
esp_ble_mesh_light_ctl_set_t (C++ class), 509
esp_ble_mesh_light_ctl_set_t::ctl_delta_uv (C++ member), 510
esp_ble_mesh_light_ctl_set_t::ctl_lightness (C++ member), 509
esp_ble_mesh_light_ctl_set_t::ctl_temperature (C++ member), 509
esp_ble_mesh_light_ctl_set_t::delay (C++ member), 510
esp_ble_mesh_light_ctl_set_t::op_en (C++ member), 509
esp_ble_mesh_light_ctl_set_t::tid (C++ member), 510
esp_ble_mesh_light_ctl_set_t::trans_time (C++ member), 510
esp_ble_mesh_light_ctl_setup_srv_t (C++ class), 522
esp_ble_mesh_light_ctl_setup_srv_t::model (C++ member), 522
esp_ble_mesh_light_ctl_setup_srv_t::rsp_ctrl (C++ member), 522
esp_ble_mesh_light_ctl_setup_srv_t::state (C++ member), 522
esp_ble_mesh_light_ctl_srv_t (C++ class), 522
esp_ble_mesh_light_ctl_srv_t::last (C++ member), 522
esp_ble_mesh_light_ctl_srv_t::model (C++ member), 522
esp_ble_mesh_light_ctl_srv_t::rsp_ctrl (C++ member), 522
esp_ble_mesh_light_ctl_srv_t::state (C++ member), 522
esp_ble_mesh_light_ctl_srv_t::transition (C++ member), 522
esp_ble_mesh_light_ctl_srv_t::tt_delta_delta_uv (C++ member), 522
esp_ble_mesh_light_ctl_srv_t::tt_delta_lightness (C++ member), 522
esp_ble_mesh_light_ctl_srv_t::tt_delta_temperature (C++ member), 522
esp_ble_mesh_light_ctl_state_t (C++ class), 521
esp_ble_mesh_light_ctl_state_t::delta_uv (C++ member), 521
esp_ble_mesh_light_ctl_state_t::delta_uv_default (C++ member), 522
esp_ble_mesh_light_ctl_state_t::lightness (C++ member), 521
esp_ble_mesh_light_ctl_state_t::lightness_default (C++ member), 522
esp_ble_mesh_light_ctl_state_t::status_code (C++ member), 522
esp_ble_mesh_light_ctl_state_t::target_delta_uv (C++ member), 521
esp_ble_mesh_light_ctl_state_t::target_lightness (C++ member), 521
esp_ble_mesh_light_ctl_state_t::target_temperature (C++ member), 521
esp_ble_mesh_light_ctl_state_t::temperature (C++ member), 521
esp_ble_mesh_light_ctl_state_t::temperature_default (C++ member), 522
esp_ble_mesh_light_ctl_state_t::temperature_range (C++ member), 522
esp_ble_mesh_light_ctl_state_t::temperature_range (C++ member), 522
esp_ble_mesh_light_ctl_status_cb_t (C++ class), 515
esp_ble_mesh_light_ctl_status_cb_t::op_en (C++ member), 515
esp_ble_mesh_light_ctl_status_cb_t::present_ctl_l (C++ member), 515
esp_ble_mesh_light_ctl_status_cb_t::present_ctl_t (C++ member), 515
esp_ble_mesh_light_ctl_status_cb_t::remain_time (C++ member), 515
esp_ble_mesh_light_ctl_status_cb_t::target_ctl_li (C++ member), 515
esp_ble_mesh_light_ctl_status_cb_t::target_ctl_te (C++ member), 515
ESP_BLE_MESH_LIGHT_CTL_TEMP_DELTA_UV_STATE (C++ enumerator), 386
esp_ble_mesh_light_ctl_temp_srv_t

(C++ class), 522
esp_ble_mesh_light_ctl_temp_srv_t::last (C++ member), 523
esp_ble_mesh_light_ctl_temp_srv_t::model (C++ member), 523
esp_ble_mesh_light_ctl_temp_srv_t::rsp_ctrl (C++ member), 523
esp_ble_mesh_light_ctl_temp_srv_t::state (C++ member), 523
esp_ble_mesh_light_ctl_temp_srv_t::transition (C++ member), 523
esp_ble_mesh_light_ctl_temp_srv_t::tt_delta_lightness (C++ member), 523
esp_ble_mesh_light_ctl_temp_srv_t::tt_delta_temperature (C++ member), 523
esp_ble_mesh_light_ctl_temperature_range_set_t (C++ class), 510
esp_ble_mesh_light_ctl_temperature_range_set_t::max_range (C++ member), 510
esp_ble_mesh_light_ctl_temperature_range_set_t::min_range (C++ member), 510
esp_ble_mesh_light_ctl_temperature_range_status_t (C++ class), 516
esp_ble_mesh_light_ctl_temperature_range_status_t::max_range (C++ member), 516
esp_ble_mesh_light_ctl_temperature_range_status_t::min_range (C++ member), 516
esp_ble_mesh_light_ctl_temperature_range_status_t::status_code (C++ member), 516
esp_ble_mesh_light_ctl_temperature_set_t (C++ class), 510
esp_ble_mesh_light_ctl_temperature_set_t::delta_uv (C++ member), 510
esp_ble_mesh_light_ctl_temperature_set_t::temperature (C++ member), 510
esp_ble_mesh_light_ctl_temperature_set_t::tid (C++ member), 510
esp_ble_mesh_light_ctl_temperature_set_t::trans_time (C++ member), 510
esp_ble_mesh_light_ctl_temperature_status_t (C++ class), 515
esp_ble_mesh_light_ctl_temperature_status_t::present_delta_uv (C++ member), 515
esp_ble_mesh_light_ctl_temperature_status_t::present_temperature (C++ member), 515
esp_ble_mesh_light_ctl_temperature_status_t::remain_time (C++ member), 516
esp_ble_mesh_light_ctl_temperature_status_t::target_delta_uv (C++ member), 516
esp_ble_mesh_light_ctl_temperature_status_t::target_temperature (C++ member), 516
esp_ble_mesh_light_hsl_default_set_t (C++ class), 512
esp_ble_mesh_light_hsl_default_set_t::hue (C++ member), 512
esp_ble_mesh_light_hsl_default_set_t::lightness (C++ member), 512
esp_ble_mesh_light_hsl_default_set_t::saturation (C++ member), 512
esp_ble_mesh_light_hsl_default_status_cb_t (C++ class), 517
esp_ble_mesh_light_hsl_default_status_cb_t::hue (C++ member), 517
esp_ble_mesh_light_hsl_default_status_cb_t::lightness (C++ member), 517
esp_ble_mesh_light_hsl_default_status_cb_t::saturation (C++ member), 517
esp_ble_mesh_light_hsl_hue_set_t (C++ class), 511
esp_ble_mesh_light_hsl_hue_set_t::delay (C++ member), 511
esp_ble_mesh_light_hsl_hue_set_t::hue (C++ member), 511
esp_ble_mesh_light_hsl_hue_set_t::op_en (C++ member), 511
esp_ble_mesh_light_hsl_hue_set_t::tid (C++ member), 511
esp_ble_mesh_light_hsl_hue_set_t::trans_time (C++ member), 511
esp_ble_mesh_light_hsl_hue_srv_t (C++ class), 524
esp_ble_mesh_light_hsl_hue_srv_t::last (C++ member), 524
esp_ble_mesh_light_hsl_hue_srv_t::model (C++ member), 524
esp_ble_mesh_light_hsl_hue_srv_t::rsp_ctrl (C++ member), 524
esp_ble_mesh_light_hsl_hue_srv_t::state (C++ member), 524
esp_ble_mesh_light_hsl_hue_srv_t::transition (C++ member), 524
esp_ble_mesh_light_hsl_hue_srv_t::tt_delta_hue (C++ member), 525
ESP_BLE_MESH_LIGHT_HSL_HUE_STATE (C++ enumerator), 386
esp_ble_mesh_light_hsl_hue_status_cb_t (C++ class), 517
esp_ble_mesh_light_hsl_hue_status_cb_t::op_en (C++ member), 517
esp_ble_mesh_light_hsl_hue_status_cb_t::present_hue (C++ member), 517
esp_ble_mesh_light_hsl_hue_status_cb_t::remain_time (C++ member), 517
esp_ble_mesh_light_hsl_hue_status_cb_t::target_hue (C++ member), 517
ESP_BLE_MESH_LIGHT_HSL_LIGHTNESS_STATE (C++ enumerator), 386
esp_ble_mesh_light_hsl_range_set_t (C++ class), 512
esp_ble_mesh_light_hsl_range_set_t::hue_range_max

(C++ member), 512
esp_ble_mesh_light_hsl_range_set_t::hue_range_min (C++ member), 512
esp_ble_mesh_light_hsl_range_set_t::saturation_range_max (C++ member), 512
esp_ble_mesh_light_hsl_range_set_t::saturation_range_min (C++ member), 512
esp_ble_mesh_light_hsl_range_status_cb_t (C++ class), 518
esp_ble_mesh_light_hsl_range_status_cb_t::hue_range_max (C++ member), 518
esp_ble_mesh_light_hsl_range_status_cb_t::hue_range_min (C++ member), 518
esp_ble_mesh_light_hsl_range_status_cb_t::saturation_range_max (C++ member), 518
esp_ble_mesh_light_hsl_range_status_cb_t::saturation_range_min (C++ member), 518
esp_ble_mesh_light_hsl_range_status_cb_t::status_code (C++ member), 518
esp_ble_mesh_light_hsl_sat_srv_t (C++ class), 525
esp_ble_mesh_light_hsl_sat_srv_t::last (C++ member), 525
esp_ble_mesh_light_hsl_sat_srv_t::model (C++ member), 525
esp_ble_mesh_light_hsl_sat_srv_t::rsp_ctrl (C++ member), 525
esp_ble_mesh_light_hsl_sat_srv_t::state (C++ member), 525
esp_ble_mesh_light_hsl_sat_srv_t::transition (C++ member), 525
esp_ble_mesh_light_hsl_sat_srv_t::tt_delta_saturation (C++ member), 525
esp_ble_mesh_light_hsl_saturation_set_t (C++ class), 511
esp_ble_mesh_light_hsl_saturation_set_t::delay (C++ member), 511
esp_ble_mesh_light_hsl_saturation_set_t::op_en (C++ member), 511
esp_ble_mesh_light_hsl_saturation_set_t::saturation (C++ member), 511
esp_ble_mesh_light_hsl_saturation_set_t::tid (C++ member), 511
esp_ble_mesh_light_hsl_saturation_set_t::trans_time (C++ member), 511
ESP_BLE_MESH_LIGHT_HSL_SATURATION_STATE (C++ enumerator), 386
esp_ble_mesh_light_hsl_saturation_status_cb_t (C++ class), 517
esp_ble_mesh_light_hsl_saturation_status_cb_t::present_saturation (C++ member), 517
esp_ble_mesh_light_hsl_saturation_status_cb_t::remaining_time (C++ member), 517
esp_ble_mesh_light_hsl_saturation_status_cb_t::target_saturation (C++ member), 517
esp_ble_mesh_light_hsl_set_t (C++ class), 510
esp_ble_mesh_light_hsl_set_t::delay (C++ member), 511
esp_ble_mesh_light_hsl_set_t::hsl_hue (C++ member), 511
esp_ble_mesh_light_hsl_set_t::hsl_lightness (C++ member), 511
esp_ble_mesh_light_hsl_set_t::hsl_saturation (C++ member), 511
esp_ble_mesh_light_hsl_set_t::op_en (C++ member), 511
esp_ble_mesh_light_hsl_set_t::tid (C++ member), 511
esp_ble_mesh_light_hsl_set_t::trans_time (C++ member), 511
esp_ble_mesh_light_hsl_setup_srv_t (C++ class), 524
esp_ble_mesh_light_hsl_setup_srv_t::model (C++ member), 524
esp_ble_mesh_light_hsl_setup_srv_t::rsp_ctrl (C++ member), 524
esp_ble_mesh_light_hsl_setup_srv_t::state (C++ member), 524
esp_ble_mesh_light_hsl_srv_t (C++ class), 524
esp_ble_mesh_light_hsl_srv_t::last (C++ member), 524
esp_ble_mesh_light_hsl_srv_t::model (C++ member), 524
esp_ble_mesh_light_hsl_srv_t::rsp_ctrl (C++ member), 524
esp_ble_mesh_light_hsl_srv_t::state (C++ member), 524
esp_ble_mesh_light_hsl_srv_t::transition (C++ member), 524
esp_ble_mesh_light_hsl_srv_t::tt_delta_hue (C++ member), 524
esp_ble_mesh_light_hsl_srv_t::tt_delta_lightness (C++ member), 524
esp_ble_mesh_light_hsl_srv_t::tt_delta_saturation (C++ member), 524
ESP_BLE_MESH_LIGHT_HSL_STATE (C++ enumerator), 386
esp_ble_mesh_light_hsl_state_t (C++ class), 523
esp_ble_mesh_light_hsl_state_t::hue (C++ member), 523
esp_ble_mesh_light_hsl_state_t::hue_default (C++ member), 523
esp_ble_mesh_light_hsl_state_t::hue_range_max (C++ member), 523
esp_ble_mesh_light_hsl_state_t::hue_range_min (C++ member), 523
esp_ble_mesh_light_hsl_state_t::lightness (C++ member), 523
esp_ble_mesh_light_hsl_state_t::lightness_default (C++ member), 523
esp_ble_mesh_light_hsl_state_t::saturation

(C++ member), 523
esp_ble_mesh_light_hsl_state_t::saturation_default (C++ member), 523
esp_ble_mesh_light_hsl_state_t::saturation_range_max (C++ member), 523
esp_ble_mesh_light_hsl_state_t::saturation_range_min (C++ member), 523
esp_ble_mesh_light_hsl_state_t::status_code (C++ member), 523
esp_ble_mesh_light_hsl_state_t::target_hsl (C++ member), 523
esp_ble_mesh_light_hsl_state_t::target_lightness (C++ member), 523
esp_ble_mesh_light_hsl_state_t::target_saturation (C++ member), 523
esp_ble_mesh_light_hsl_status_cb_t (C++ class), 516
esp_ble_mesh_light_hsl_status_cb_t::hsl_hue (C++ member), 516
esp_ble_mesh_light_hsl_status_cb_t::hsl_lightness (C++ member), 516
esp_ble_mesh_light_hsl_status_cb_t::hsl_saturation (C++ member), 516
esp_ble_mesh_light_hsl_status_cb_t::op_en (C++ member), 516
esp_ble_mesh_light_hsl_status_cb_t::remain_time (C++ member), 516
esp_ble_mesh_light_hsl_target_status_cb (C++ class), 516
esp_ble_mesh_light_hsl_target_status_cb::hsl_hue (C++ member), 517
esp_ble_mesh_light_hsl_target_status_cb::hsl_lightness (C++ member), 517
esp_ble_mesh_light_hsl_target_status_cb::hsl_saturation (C++ member), 517
esp_ble_mesh_light_hsl_target_status_cb::op_en (C++ member), 517
esp_ble_mesh_light_hsl_target_status_cb::remain_time (C++ member), 517
esp_ble_mesh_light_lc_light_onoff_set_t (C++ class), 513
esp_ble_mesh_light_lc_light_onoff_set_t::delay (C++ member), 513
esp_ble_mesh_light_lc_light_onoff_set_t::light_onoff (C++ member), 513
esp_ble_mesh_light_lc_light_onoff_set_t::op_en (C++ member), 513
esp_ble_mesh_light_lc_light_onoff_set_t::tid (C++ member), 513
esp_ble_mesh_light_lc_light_onoff_set_t::trans_time (C++ member), 513
ESP_BLE_MESH_LIGHT_LC_LIGHT_ONOFF_STATE (C++ enumerator), 386
esp_ble_mesh_light_lc_light_onoff_status_cb (C++ class), 519
esp_ble_mesh_light_lc_light_onoff_status_cb_t::present_onoff (C++ member), 519
esp_ble_mesh_light_lc_light_onoff_status_cb_t::remain_time (C++ member), 519
esp_ble_mesh_light_lc_light_onoff_status_cb_t::target_onoff (C++ member), 519
esp_ble_mesh_light_lc_mode_set_t (C++ class), 513
esp_ble_mesh_light_lc_mode_set_t::mode (C++ member), 513
esp_ble_mesh_light_lc_mode_status_cb_t (C++ class), 519
esp_ble_mesh_light_lc_mode_status_cb_t::mode (C++ member), 519
esp_ble_mesh_light_lc_om_set_t (C++ class), 513
esp_ble_mesh_light_lc_om_set_t::mode (C++ member), 513
esp_ble_mesh_light_lc_om_status_cb_t (C++ class), 519
esp_ble_mesh_light_lc_om_status_cb_t::mode (C++ member), 519
esp_ble_mesh_light_lc_property_get_t (C++ class), 514
esp_ble_mesh_light_lc_property_get_t::property_id (C++ member), 514
esp_ble_mesh_light_lc_property_set_t (C++ class), 514
esp_ble_mesh_light_lc_property_set_t::property_id (C++ member), 514
esp_ble_mesh_light_lc_property_set_t::property_val (C++ member), 514
esp_ble_mesh_light_lc_property_state_t (C++ class), 527
esp_ble_mesh_light_lc_property_state_t::ambient_luxlevel_prop (C++ member), 528
esp_ble_mesh_light_lc_property_state_t::ambient_luxlevel_stat (C++ member), 528
esp_ble_mesh_light_lc_property_state_t::ambient_luxlevel_stat (C++ member), 528
esp_ble_mesh_light_lc_property_state_t::lightness_linear (C++ member), 527
esp_ble_mesh_light_lc_property_state_t::lightness_linear_prop (C++ member), 528
esp_ble_mesh_light_lc_property_state_t::lightness_linear_stat (C++ member), 528
esp_ble_mesh_light_lc_property_state_t::regulator_accuracy (C++ member), 528
esp_ble_mesh_light_lc_property_state_t::regulator_kid (C++ member), 528
esp_ble_mesh_light_lc_property_state_t::regulator_kiu (C++ member), 528
esp_ble_mesh_light_lc_property_state_t::regulator_kpd (C++ member), 528
esp_ble_mesh_light_lc_property_state_t::regulator_kpu (C++ member), 528
esp_ble_mesh_light_lc_property_state_t::set_occupancy_to_run (C++ member), 528
esp_ble_mesh_light_lc_property_state_t::time_fade (C++ member), 528

(C++ member), 527
esp_ble_mesh_light_lc_property_state_t::simple_fade_on (C++ member), 527
esp_ble_mesh_light_lc_property_state_t::simple_fade_standby_auto (C++ member), 527
esp_ble_mesh_light_lc_property_state_t::simple_fade_standby_manual (C++ member), 527
esp_ble_mesh_light_lc_property_state_t::simple_occupancy_delay (C++ member), 527
esp_ble_mesh_light_lc_property_state_t::simple_prolong (C++ member), 527
esp_ble_mesh_light_lc_property_state_t::simple_run_on (C++ member), 527
esp_ble_mesh_light_lc_property_status_cb_t (C++ class), 520
esp_ble_mesh_light_lc_property_status_cb_t::property_id (C++ member), 520
esp_ble_mesh_light_lc_property_status_cb_t::property_value (C++ member), 520
esp_ble_mesh_light_lc_setup_srv_t (C++ class), 529
esp_ble_mesh_light_lc_setup_srv_t::lc (C++ member), 530
esp_ble_mesh_light_lc_setup_srv_t::model (C++ member), 530
esp_ble_mesh_light_lc_setup_srv_t::rsp_ctrl (C++ member), 530
esp_ble_mesh_light_lc_srv_t (C++ class), 529
esp_ble_mesh_light_lc_srv_t::last (C++ member), 529
esp_ble_mesh_light_lc_srv_t::lc (C++ member), 529
esp_ble_mesh_light_lc_srv_t::model (C++ member), 529
esp_ble_mesh_light_lc_srv_t::rsp_ctrl (C++ member), 529
esp_ble_mesh_light_lc_srv_t::transition (C++ member), 529
esp_ble_mesh_light_lc_state_machine_t (C++ class), 528
esp_ble_mesh_light_lc_state_machine_t::enable (C++ member), 529
esp_ble_mesh_light_lc_state_machine_t::fade_on (C++ member), 529
esp_ble_mesh_light_lc_state_machine_t::fade_standby_auto (C++ member), 529
esp_ble_mesh_light_lc_state_machine_t::fade_standby_manual (C++ member), 529
esp_ble_mesh_light_lc_state_machine_t::state (C++ member), 529
esp_ble_mesh_light_lc_state_machine_t::timer (C++ member), 529
esp_ble_mesh_light_lc_state_t (C++ class), 526
esp_ble_mesh_light_lc_state_t::ambient_lux_level (C++ member), 527
esp_ble_mesh_light_lc_state_t::light_onoff (C++ member), 527
esp_ble_mesh_light_lc_state_t::linear_output (C++ member), 527
esp_ble_mesh_light_lc_state_t::mode (C++ member), 526
esp_ble_mesh_light_lc_state_t::occupancy (C++ member), 527
esp_ble_mesh_light_lc_state_t::occupancy_mode (C++ member), 527
esp_ble_mesh_light_lc_state_t::target_light_onoff (C++ member), 527
ESP_BLE_MESH_LIGHT_LIGHTNESS_ACTUAL_STATE (C++ enumerator), 385
esp_ble_mesh_light_lightness_default_set_t (C++ class), 509
esp_ble_mesh_light_lightness_default_set_t::light (C++ member), 509
esp_ble_mesh_light_lightness_default_status_cb_t (C++ class), 515
esp_ble_mesh_light_lightness_default_status_cb_t: (C++ member), 515
esp_ble_mesh_light_lightness_last_status_cb_t (C++ class), 514
esp_ble_mesh_light_lightness_last_status_cb_t::li (C++ member), 515
esp_ble_mesh_light_lightness_linear_set_t (C++ class), 509
esp_ble_mesh_light_lightness_linear_set_t::delay (C++ member), 509
esp_ble_mesh_light_lightness_linear_set_t::lightn (C++ member), 509
esp_ble_mesh_light_lightness_linear_set_t::op_en (C++ member), 509
esp_ble_mesh_light_lightness_linear_set_t::tid (C++ member), 509
esp_ble_mesh_light_lightness_linear_set_t::trans_ (C++ member), 509
ESP_BLE_MESH_LIGHT_LIGHTNESS_LINEAR_STATE (C++ enumerator), 386
esp_ble_mesh_light_lightness_linear_status_cb_t (C++ class), 514
esp_ble_mesh_light_lightness_linear_status_cb_t:: (C++ member), 514
esp_ble_mesh_light_lightness_linear_status_cb_t:: (C++ member), 514
esp_ble_mesh_light_lightness_linear_status_cb_t:: (C++ member), 514
esp_ble_mesh_light_lightness_linear_status_cb_t:: (C++ member), 514
esp_ble_mesh_light_lightness_range_set_t (C++ class), 509
esp_ble_mesh_light_lightness_range_set_t::range_m (C++ member), 509
esp_ble_mesh_light_lightness_range_set_t::range_m (C++ member), 509
esp_ble_mesh_light_lightness_range_status_cb_t

(C++ class), 515
esp_ble_mesh_light_lightness_range_state
(C++ member), 515
esp_ble_mesh_light_lightness_range_state
(C++ member), 515
esp_ble_mesh_light_lightness_range_state
(C++ member), 515
esp_ble_mesh_light_lightness_set_t
(C++ class), 508
esp_ble_mesh_light_lightness_set_t::dele
(C++ member), 509
esp_ble_mesh_light_lightness_set_t::light
(C++ member), 508
esp_ble_mesh_light_lightness_set_t::op_
(C++ member), 508
esp_ble_mesh_light_lightness_set_t::tid
(C++ member), 509
esp_ble_mesh_light_lightness_set_t::trans
(C++ member), 509
esp_ble_mesh_light_lightness_setup_srv_t
(C++ class), 521
esp_ble_mesh_light_lightness_setup_srv_t::model
(C++ member), 521
esp_ble_mesh_light_lightness_setup_srv_t::rsp_ctrl
(C++ member), 521
esp_ble_mesh_light_lightness_setup_srv_t::state
(C++ member), 521
esp_ble_mesh_light_lightness_srv_t
(C++ class), 520
esp_ble_mesh_light_lightness_srv_t::actual_transition
(C++ member), 521
esp_ble_mesh_light_lightness_srv_t::last
(C++ member), 521
esp_ble_mesh_light_lightness_srv_t::linear_transition
(C++ member), 521
esp_ble_mesh_light_lightness_srv_t::model
(C++ member), 521
esp_ble_mesh_light_lightness_srv_t::rsp_ctrl
(C++ member), 521
esp_ble_mesh_light_lightness_srv_t::state
(C++ member), 521
esp_ble_mesh_light_lightness_srv_t::tt_delta_lightness_actual
(C++ member), 521
esp_ble_mesh_light_lightness_srv_t::tt_delta_lightness_linear
(C++ member), 521
esp_ble_mesh_light_lightness_state_t
(C++ class), 520
esp_ble_mesh_light_lightness_state_t::last_actual
(C++ member), 520
esp_ble_mesh_light_lightness_state_t::last_default
(C++ member), 520
esp_ble_mesh_light_lightness_state_t::last_linear
(C++ member), 520
esp_ble_mesh_light_lightness_state_t::range_max
(C++ member), 520
esp_ble_mesh_light_lightness_state_t::range_min
(C++ member), 520
esp_ble_mesh_light_lightness_state_t::status_code
(C++ member), 520
esp_ble_mesh_light_lightness_state_t::target_light_actual
(C++ member), 520
esp_ble_mesh_light_lightness_state_t::target_light_linear
(C++ member), 520
esp_ble_mesh_light_lightness_status_cb_t
(C++ class), 514
esp_ble_mesh_light_lightness_status_cb_t::op_en
(C++ member), 514
esp_ble_mesh_light_lightness_status_cb_t::present
(C++ member), 514
esp_ble_mesh_light_lightness_status_cb_t::remain_
(C++ member), 514
esp_ble_mesh_light_lightness_status_cb_t::target_
(C++ member), 514
esp_ble_mesh_light_message_opcode_t
(C++ type), 380
esp_ble_mesh_light_xyl_default_set_t
(C++ class), 512
esp_ble_mesh_light_xyl_default_set_t::lightness
(C++ member), 513
esp_ble_mesh_light_xyl_default_set_t::xyl_x
(C++ member), 513
esp_ble_mesh_light_xyl_default_set_t::xyl_y
(C++ member), 513
esp_ble_mesh_light_xyl_default_status_cb_t
(C++ class), 518
esp_ble_mesh_light_xyl_default_status_cb_t::light
(C++ member), 519
esp_ble_mesh_light_xyl_default_status_cb_t::xyl_x
(C++ member), 519
esp_ble_mesh_light_xyl_default_status_cb_t::xyl_y
(C++ member), 519
ESP_BLE_MESH_LIGHT_XYL_LIGHTNESS_STATE
(C++ enumerator), 386
esp_ble_mesh_light_xyl_range_set_t
(C++ class), 513
esp_ble_mesh_light_xyl_range_set_t::xyl_x_range_m
(C++ member), 513
esp_ble_mesh_light_xyl_range_set_t::xyl_x_range_m
(C++ member), 513
esp_ble_mesh_light_xyl_range_set_t::xyl_y_range_m
(C++ member), 513
esp_ble_mesh_light_xyl_range_set_t::xyl_y_range_m
(C++ member), 513
esp_ble_mesh_light_xyl_range_status_cb_t
(C++ class), 519
esp_ble_mesh_light_xyl_range_status_cb_t::status_
(C++ member), 519
esp_ble_mesh_light_xyl_range_status_cb_t::xyl_x_r
(C++ member), 519
esp_ble_mesh_light_xyl_range_status_cb_t::xyl_x_r
(C++ member), 519
esp_ble_mesh_light_xyl_range_status_cb_t::xyl_y_r
(C++ member), 519
esp_ble_mesh_light_xyl_range_status_cb_t::xyl_y_r

(C++ member), 519
esp_ble_mesh_light_xyl_set_t (C++ class), 512
esp_ble_mesh_light_xyl_set_t::delay (C++ member), 512
esp_ble_mesh_light_xyl_set_t::op_en (C++ member), 512
esp_ble_mesh_light_xyl_set_t::tid (C++ member), 512
esp_ble_mesh_light_xyl_set_t::trans_time (C++ member), 512
esp_ble_mesh_light_xyl_set_t::xyl_lightness (C++ member), 512
esp_ble_mesh_light_xyl_set_t::xyl_x (C++ member), 512
esp_ble_mesh_light_xyl_set_t::xyl_y (C++ member), 512
esp_ble_mesh_light_xyl_setup_srv_t (C++ class), 526
esp_ble_mesh_light_xyl_setup_srv_t::model (C++ member), 526
esp_ble_mesh_light_xyl_setup_srv_t::rsp_ctrl (C++ member), 526
esp_ble_mesh_light_xyl_setup_srv_t::state (C++ member), 526
esp_ble_mesh_light_xyl_srv_t (C++ class), 526
esp_ble_mesh_light_xyl_srv_t::last (C++ member), 526
esp_ble_mesh_light_xyl_srv_t::model (C++ member), 526
esp_ble_mesh_light_xyl_srv_t::rsp_ctrl (C++ member), 526
esp_ble_mesh_light_xyl_srv_t::state (C++ member), 526
esp_ble_mesh_light_xyl_srv_t::transition (C++ member), 526
esp_ble_mesh_light_xyl_srv_t::tt_delta_lightness (C++ member), 526
esp_ble_mesh_light_xyl_srv_t::tt_delta_x (C++ member), 526
esp_ble_mesh_light_xyl_srv_t::tt_delta_y (C++ member), 526
esp_ble_mesh_light_xyl_state_t (C++ class), 525
esp_ble_mesh_light_xyl_state_t::lightness (C++ member), 525
esp_ble_mesh_light_xyl_state_t::lightness_default (C++ member), 525
esp_ble_mesh_light_xyl_state_t::status_code (C++ member), 525
esp_ble_mesh_light_xyl_state_t::target_lightness (C++ member), 525
esp_ble_mesh_light_xyl_state_t::target_x (C++ member), 525
esp_ble_mesh_light_xyl_state_t::target_y (C++ member), 525
esp_ble_mesh_light_xyl_state_t::x (C++ member), 525
esp_ble_mesh_light_xyl_state_t::x_default (C++ member), 525
esp_ble_mesh_light_xyl_state_t::x_range_max (C++ member), 526
esp_ble_mesh_light_xyl_state_t::x_range_min (C++ member), 525
esp_ble_mesh_light_xyl_state_t::y (C++ member), 525
esp_ble_mesh_light_xyl_state_t::y_default (C++ member), 525
esp_ble_mesh_light_xyl_state_t::y_range_max (C++ member), 526
esp_ble_mesh_light_xyl_state_t::y_range_min (C++ member), 526
esp_ble_mesh_light_xyl_status_cb_t (C++ class), 518
esp_ble_mesh_light_xyl_status_cb_t::op_en (C++ member), 518
esp_ble_mesh_light_xyl_status_cb_t::remain_time (C++ member), 518
esp_ble_mesh_light_xyl_status_cb_t::xyl_lightness (C++ member), 518
esp_ble_mesh_light_xyl_status_cb_t::xyl_x (C++ member), 518
esp_ble_mesh_light_xyl_status_cb_t::xyl_y (C++ member), 518
esp_ble_mesh_light_xyl_target_status_cb_t (C++ class), 518
esp_ble_mesh_light_xyl_target_status_cb_t::op_en (C++ member), 518
esp_ble_mesh_light_xyl_target_status_cb_t::remain (C++ member), 518
esp_ble_mesh_light_xyl_target_status_cb_t::target (C++ member), 518
esp_ble_mesh_light_xyl_target_status_cb_t::target (C++ member), 518
esp_ble_mesh_light_xyl_target_status_cb_t::target (C++ member), 518
esp_ble_mesh_lighting_server_cb_event_t (C++ enum), 544
esp_ble_mesh_lighting_server_cb_param_t (C++ class), 539
esp_ble_mesh_lighting_server_cb_param_t::ctx (C++ member), 540
esp_ble_mesh_lighting_server_cb_param_t::model (C++ member), 540
esp_ble_mesh_lighting_server_cb_param_t::value (C++ member), 540
esp_ble_mesh_lighting_server_cb_t (C++ type), 543
esp_ble_mesh_lighting_server_cb_value_t (C++ union), 508
esp_ble_mesh_lighting_server_cb_value_t::get (C++ member), 508
esp_ble_mesh_lighting_server_cb_value_t::set (C++ member), 508
esp_ble_mesh_lighting_server_cb_value_t::state_ch

(C++ member), 508
esp_ble_mesh_lighting_server_cb_value_t::status (C++ union), 508
(C++ member), 508
ESP_BLE_MESH_LIGHTING_SERVER_EVT_MAX (C++ enumerator), 544
ESP_BLE_MESH_LIGHTING_SERVER_RECV_GET_MSG_EVT (C++ enumerator), 544
esp_ble_mesh_lighting_server_recv_get_msg_t (C++ union), 507
esp_ble_mesh_lighting_server_recv_get_msg_t::time_scene (C++ member), 507
ESP_BLE_MESH_LIGHTING_SERVER_RECV_SET_MSG_EVT (C++ enumerator), 544
esp_ble_mesh_lighting_server_recv_set_msg_t (C++ union), 507
esp_ble_mesh_lighting_server_recv_set_msg_t::time_scene (C++ member), 507
esp_ble_mesh_lighting_server_recv_set_msg_t::time_scene_delta_up (C++ member), 507
esp_ble_mesh_lighting_server_recv_set_msg_t::time_scene_delay (C++ member), 507
esp_ble_mesh_lighting_server_recv_set_msg_t::time_scene_delay_range (C++ member), 507
esp_ble_mesh_lighting_server_recv_set_msg_t::hsl_hue (C++ member), 508
esp_ble_mesh_lighting_server_recv_set_msg_t::hsl_hue_delta_up (C++ member), 507
esp_ble_mesh_lighting_server_recv_set_msg_t::hsl_hue_range (C++ member), 508
esp_ble_mesh_lighting_server_recv_set_msg_t::hsl_saturation (C++ member), 507
esp_ble_mesh_lighting_server_recv_set_msg_t::hsl_saturation_delta_up (C++ member), 507
esp_ble_mesh_lighting_server_recv_set_msg_t::hsl_saturation_range (C++ member), 508
esp_ble_mesh_lighting_server_recv_set_msg_t::light_onoff (C++ member), 508
esp_ble_mesh_lighting_server_recv_set_msg_t::light_mode (C++ member), 508
esp_ble_mesh_lighting_server_recv_set_msg_t::light_ctl (C++ member), 508
esp_ble_mesh_lighting_server_recv_set_msg_t::light_ctl_temp_range (C++ member), 508
esp_ble_mesh_lighting_server_recv_set_msg_t::light_hsl (C++ member), 507
esp_ble_mesh_lighting_server_recv_set_msg_t::light_hsl_default (C++ member), 507
esp_ble_mesh_lighting_server_recv_set_msg_t::light_hsl_linear (C++ member), 507
esp_ble_mesh_lighting_server_recv_set_msg_t::light_hsl_range (C++ member), 507
esp_ble_mesh_lighting_server_recv_set_msg_t::xyl_color (C++ member), 508
esp_ble_mesh_lighting_server_recv_set_msg_t::xyl_default (C++ member), 508
esp_ble_mesh_lighting_server_recv_set_msg_t::xyl_range (C++ member), 508
ESP_BLE_MESH_LIGHTING_SERVER_RECV_STATUS_MSG_EVT (C++ enumerator), 544
esp_ble_mesh_lighting_server_recv_status_msg_t (C++ union), 508
esp_ble_mesh_lighting_server_recv_status_msg_t::status (C++ member), 508
ESP_BLE_MESH_LIGHTING_SERVER_STATE_CHANGE_EVT (C++ enumerator), 544
esp_ble_mesh_lighting_server_state_change_t (C++ union), 506
esp_ble_mesh_lighting_server_state_change_t::ctl_get (C++ member), 506
esp_ble_mesh_lighting_server_state_change_t::ctl_lc_mode_get (C++ member), 506
esp_ble_mesh_lighting_server_state_change_t::ctl_lc_mode_set (C++ member), 506
esp_ble_mesh_lighting_server_state_change_t::ctl_set (C++ member), 506
esp_ble_mesh_lighting_server_state_change_t::hsl_get (C++ member), 506
esp_ble_mesh_lighting_server_state_change_t::hsl_hue_get (C++ member), 506
esp_ble_mesh_lighting_server_state_change_t::hsl_hue_set (C++ member), 506
esp_ble_mesh_lighting_server_state_change_t::hsl_saturation_get (C++ member), 506
esp_ble_mesh_lighting_server_state_change_t::hsl_saturation_set (C++ member), 506
esp_ble_mesh_lighting_server_state_change_t::hsl_set (C++ member), 506
esp_ble_mesh_lighting_server_state_change_t::lc_light_onoff_get (C++ member), 507
esp_ble_mesh_lighting_server_state_change_t::lc_light_onoff_set (C++ member), 507
esp_ble_mesh_lighting_server_state_change_t::lc_om_get (C++ member), 507
esp_ble_mesh_lighting_server_state_change_t::lc_om_set (C++ member), 507
esp_ble_mesh_lighting_server_state_change_t::lc_property_get (C++ member), 507
esp_ble_mesh_lighting_server_state_change_t::lc_property_set (C++ member), 507
esp_ble_mesh_lighting_server_state_change_t::light_onoff_get (C++ member), 506
esp_ble_mesh_lighting_server_state_change_t::light_onoff_set (C++ member), 506
esp_ble_mesh_lighting_server_state_change_t::light_range_get (C++ member), 506
esp_ble_mesh_lighting_server_state_change_t::light_range_set (C++ member), 506
esp_ble_mesh_lighting_server_state_change_t::sensor_get (C++ member), 507
esp_ble_mesh_lighting_server_state_change_t::xyl_default_get (C++ member), 506
esp_ble_mesh_lighting_server_state_change_t::xyl_get (C++ member), 507
esp_ble_mesh_lighting_server_state_change_t::xyl_set (C++ member), 506
esp_ble_mesh_lpn_disable (C++ function), 389
ESP_BLE_MESH_LPN_DISABLE_COMP_EVT (C++ enumerator), 384
esp_ble_mesh_lpn_enable (C++ function), 389
ESP_BLE_MESH_LPN_ENABLE_COMP_EVT (C++ enumerator), 384
ESP_BLE_MESH_LPN_FRIENDSHIP_ESTABLISH_EVT (C++ enumerator), 384

ESP_BLE_MESH_LPN_FRIENDSHIP_TERMINATE_EVT (C++ enumerator), 384
esp_ble_mesh_lpn_poll (C++ function), 390
ESP_BLE_MESH_LPN_POLL_COMP_EVT (C++ enumerator), 384
ESP_BLE_MESH_MECHANISM_JAMMED_ERROR (C 宏), 434
ESP_BLE_MESH_MECHANISM_JAMMED_WARNING (C 宏), 434
ESP_BLE_MESH_MEMORY_ERROR (C 宏), 434
ESP_BLE_MESH_MEMORY_WARNING (C 宏), 434
ESP_BLE_MESH_MIC_LONG (C 宏), 364
ESP_BLE_MESH_MIC_SHORT (C 宏), 364
esp_ble_mesh_model (C++ class), 358
esp_ble_mesh_model::cb (C++ member), 358
esp_ble_mesh_model::company_id (C++ member), 358
esp_ble_mesh_model::element (C++ member), 358
esp_ble_mesh_model::element_idx (C++ member), 358
esp_ble_mesh_model::flags (C++ member), 358
esp_ble_mesh_model::groups (C++ member), 358
esp_ble_mesh_model::keys (C++ member), 358
esp_ble_mesh_model::model_id (C++ member), 358
esp_ble_mesh_model::model_idx (C++ member), 358
esp_ble_mesh_model::op (C++ member), 358
esp_ble_mesh_model::pub (C++ member), 358
esp_ble_mesh_model::user_data (C++ member), 359
esp_ble_mesh_model::vnd (C++ member), 358
esp_ble_mesh_model::vnd_model_id (C++ member), 358
esp_ble_mesh_model::[anonymous] (C++ member), 358
esp_ble_mesh_model_cb_event_t (C++ enum), 386
esp_ble_mesh_model_cb_param_t (C++ union), 354
esp_ble_mesh_model_cb_param_t::ble_mesh_client_model_send_timeout_param (C++ class), 354
esp_ble_mesh_model_cb_param_t::ble_mesh_client_model_send_timeout_param::ctx (C++ member), 354
esp_ble_mesh_model_cb_param_t::ble_mesh_client_model_send_timeout_param::model (C++ member), 354
esp_ble_mesh_model_cb_param_t::ble_mesh_client_model_send_timeout_param::opcode (C++ member), 354
esp_ble_mesh_model_cb_param_t::ble_mesh_mod_recv_publish_msg_param (C++ class), 354
esp_ble_mesh_model_cb_param_t::ble_mesh_mod_recv_publish_msg_param::ctx (C++ member), 355
esp_ble_mesh_model_cb_param_t::ble_mesh_mod_recv_publish_msg_param::length (C++ member), 355
esp_ble_mesh_model_cb_param_t::ble_mesh_mod_recv_ (C++ member), 355
esp_ble_mesh_model_cb_param_t::ble_mesh_mod_recv_ (C++ member), 355
esp_ble_mesh_model_cb_param_t::ble_mesh_mod_recv_ (C++ member), 355
esp_ble_mesh_model_cb_param_t::ble_mesh_model_ope (C++ class), 355
esp_ble_mesh_model_cb_param_t::ble_mesh_model_ope (C++ member), 355
esp_ble_mesh_model_cb_param_t::ble_mesh_model_ope (C++ member), 355
esp_ble_mesh_model_cb_param_t::ble_mesh_model_ope (C++ member), 355
esp_ble_mesh_model_cb_param_t::ble_mesh_model_ope (C++ member), 355
esp_ble_mesh_model_cb_param_t::ble_mesh_model_ope (C++ member), 355
esp_ble_mesh_model_cb_param_t::ble_mesh_model_pub (C++ class), 355
esp_ble_mesh_model_cb_param_t::ble_mesh_model_pub (C++ member), 355
esp_ble_mesh_model_cb_param_t::ble_mesh_model_pub (C++ member), 355
esp_ble_mesh_model_cb_param_t::ble_mesh_model_pub (C++ class), 355
esp_ble_mesh_model_cb_param_t::ble_mesh_model_pub (C++ member), 355
esp_ble_mesh_model_cb_param_t::ble_mesh_model_sen (C++ class), 355
esp_ble_mesh_model_cb_param_t::ble_mesh_model_sen (C++ member), 356
esp_ble_mesh_model_cb_param_t::ble_mesh_model_sen (C++ member), 356
esp_ble_mesh_model_cb_param_t::ble_mesh_model_sen (C++ member), 356
esp_ble_mesh_model_cb_param_t::ble_mesh_model_sen (C++ member), 356
esp_ble_mesh_model_cb_param_t::ble_mesh_server_mo (C++ class), 356
esp_ble_mesh_model_cb_param_t::ble_mesh_server_mo (C++ member), 356
esp_ble_mesh_model_cb_param_t::ble_mesh_server_mo (C++ member), 356
esp_ble_mesh_model_cb_param_t::ble_mesh_server_mo (C++ member), 356
esp_ble_mesh_model_cb_param_t::client_recv_publis (C++ member), 354
esp_ble_mesh_model_cb_param_t::client_send_timeou (C++ member), 354
esp_ble_mesh_model_cb_param_t::model_operation (C++ member), 354
esp_ble_mesh_model_cb_param_t::model_publish_comp (C++ member), 354
esp_ble_mesh_model_cb_param_t::model_publish_upda (C++ member), 354
esp_ble_mesh_model_cb_param_t::model_send_comp (C++ member), 354

esp_ble_mesh_model_cb_param_t::server_model_update (C++ member), 354
esp_ble_mesh_model_cb_t (C++ type), 397
esp_ble_mesh_model_cbs_t (C++ class), 358
esp_ble_mesh_model_cbs_t::init_cb (C++ member), 358
ESP_BLE_MESH_MODEL_CFG_CLI (C 宏), 426
ESP_BLE_MESH_MODEL_CFG_SRV (C 宏), 426
ESP_BLE_MESH_MODEL_EVT_MAX (C++ enumerator), 386
ESP_BLE_MESH_MODEL_GEN_ADMIN_PROP_SRV (C 宏), 464
ESP_BLE_MESH_MODEL_GEN_BATTERY_CLI (C 宏), 462
ESP_BLE_MESH_MODEL_GEN_BATTERY_SRV (C 宏), 463
ESP_BLE_MESH_MODEL_GEN_CLIENT_PROP_SRV (C 宏), 464
ESP_BLE_MESH_MODEL_GEN_DEF_TRANS_TIME_CLI (C 宏), 461
ESP_BLE_MESH_MODEL_GEN_DEF_TRANS_TIME_SRV (C 宏), 462
ESP_BLE_MESH_MODEL_GEN_LEVEL_CLI (C 宏), 461
ESP_BLE_MESH_MODEL_GEN_LEVEL_SRV (C 宏), 462
ESP_BLE_MESH_MODEL_GEN_LOCATION_CLI (C 宏), 462
ESP_BLE_MESH_MODEL_GEN_LOCATION_SETUP_SRV (C 宏), 464
ESP_BLE_MESH_MODEL_GEN_LOCATION_SRV (C 宏), 464
ESP_BLE_MESH_MODEL_GEN_MANUFACTURER_PROP_SRV (C 宏), 464
ESP_BLE_MESH_MODEL_GEN_ONOFF_CLI (C 宏), 461
ESP_BLE_MESH_MODEL_GEN_ONOFF_SRV (C 宏), 462
ESP_BLE_MESH_MODEL_GEN_POWER_LEVEL_CLI (C 宏), 461
ESP_BLE_MESH_MODEL_GEN_POWER_LEVEL_SETUP_SRV (C 宏), 463
ESP_BLE_MESH_MODEL_GEN_POWER_LEVEL_SRV (C 宏), 463
ESP_BLE_MESH_MODEL_GEN_POWER_ONOFF_CLI (C 宏), 461
ESP_BLE_MESH_MODEL_GEN_POWER_ONOFF_SETUP_SRV (C 宏), 463
ESP_BLE_MESH_MODEL_GEN_POWER_ONOFF_SRV (C 宏), 463
ESP_BLE_MESH_MODEL_GEN_PROPERTY_CLI (C 宏), 462
ESP_BLE_MESH_MODEL_GEN_USER_PROP_SRV (C 宏), 464
ESP_BLE_MESH_MODEL_HEALTH_CLI (C 宏), 433
ESP_BLE_MESH_MODEL_HEALTH_SRV (C 宏), 433
ESP_BLE_MESH_MODEL_ID_CONFIG_CLI (C 宏), 368
ESP_BLE_MESH_MODEL_ID_CONFIG_SRV (C 宏), 368
ESP_BLE_MESH_MODEL_ID_GEN_ADMIN_PROP_SRV (C 宏), 368
ESP_BLE_MESH_MODEL_ID_GEN_BATTERY_CLI (C 宏), 368
ESP_BLE_MESH_MODEL_ID_GEN_BATTERY_SRV (C 宏), 368
ESP_BLE_MESH_MODEL_ID_GEN_CLIENT_PROP_SRV (C 宏), 368
ESP_BLE_MESH_MODEL_ID_GEN_DEF_TRANS_TIME_CLI (C 宏), 368
ESP_BLE_MESH_MODEL_ID_GEN_DEF_TRANS_TIME_SRV (C 宏), 368
ESP_BLE_MESH_MODEL_ID_GEN_LEVEL_CLI (C 宏), 368
ESP_BLE_MESH_MODEL_ID_GEN_LEVEL_SRV (C 宏), 368
ESP_BLE_MESH_MODEL_ID_GEN_LOCATION_CLI (C 宏), 368
ESP_BLE_MESH_MODEL_ID_GEN_LOCATION_SETUP_SRV (C 宏), 368
ESP_BLE_MESH_MODEL_ID_GEN_LOCATION_SRV (C 宏), 368
ESP_BLE_MESH_MODEL_ID_GEN_MANUFACTURER_PROP_SRV (C 宏), 368
ESP_BLE_MESH_MODEL_ID_GEN_ONOFF_CLI (C 宏), 368
ESP_BLE_MESH_MODEL_ID_GEN_ONOFF_SRV (C 宏), 368
ESP_BLE_MESH_MODEL_ID_GEN_POWER_LEVEL_CLI (C 宏), 368
ESP_BLE_MESH_MODEL_ID_GEN_POWER_LEVEL_SETUP_SRV (C 宏), 368
ESP_BLE_MESH_MODEL_ID_GEN_POWER_LEVEL_SRV (C 宏), 368
ESP_BLE_MESH_MODEL_ID_GEN_POWER_ONOFF_CLI (C 宏), 368
ESP_BLE_MESH_MODEL_ID_GEN_POWER_ONOFF_SETUP_SRV (C 宏), 368
ESP_BLE_MESH_MODEL_ID_GEN_POWER_ONOFF_SRV (C 宏), 368
ESP_BLE_MESH_MODEL_ID_GEN_PROP_CLI (C 宏), 368
ESP_BLE_MESH_MODEL_ID_GEN_USER_PROP_SRV (C 宏), 368
ESP_BLE_MESH_MODEL_ID_HEALTH_CLI (C 宏), 368
ESP_BLE_MESH_MODEL_ID_HEALTH_SRV (C 宏), 368
ESP_BLE_MESH_MODEL_ID_LIGHT_CTL_CLI (C 宏), 369
ESP_BLE_MESH_MODEL_ID_LIGHT_CTL_SETUP_SRV (C 宏), 369
ESP_BLE_MESH_MODEL_ID_LIGHT_CTL_SRV (C 宏), 369
ESP_BLE_MESH_MODEL_ID_LIGHT_CTL_TEMP_SRV (C 宏), 369

ESP_BLE_MESH_MODEL_ID_LIGHT_HSL_CLI (*C 宏*), 369
ESP_BLE_MESH_MODEL_ID_LIGHT_HSL_HUE_SRV (*C 宏*), 369
ESP_BLE_MESH_MODEL_ID_LIGHT_HSL_SAT_SRV (*C 宏*), 369
ESP_BLE_MESH_MODEL_ID_LIGHT_HSL_SETUP_SRV (*C 宏*), 369
ESP_BLE_MESH_MODEL_ID_LIGHT_HSL_SRV (*C 宏*), 369
ESP_BLE_MESH_MODEL_ID_LIGHT_LC_CLI (*C 宏*), 369
ESP_BLE_MESH_MODEL_ID_LIGHT_LC_SETUP_SRV (*C 宏*), 369
ESP_BLE_MESH_MODEL_ID_LIGHT_LC_SRV (*C 宏*), 369
ESP_BLE_MESH_MODEL_ID_LIGHT_LIGHTNESS_CLI (*C 宏*), 369
ESP_BLE_MESH_MODEL_ID_LIGHT_LIGHTNESS_SETUP_SRV (*C 宏*), 369
ESP_BLE_MESH_MODEL_ID_LIGHT_LIGHTNESS_SRV (*C 宏*), 369
ESP_BLE_MESH_MODEL_ID_LIGHT_XYL_CLI (*C 宏*), 369
ESP_BLE_MESH_MODEL_ID_LIGHT_XYL_SETUP_SRV (*C 宏*), 369
ESP_BLE_MESH_MODEL_ID_LIGHT_XYL_SRV (*C 宏*), 369
ESP_BLE_MESH_MODEL_ID_SCENE_CLI (*C 宏*), 369
ESP_BLE_MESH_MODEL_ID_SCENE_SETUP_SRV (*C 宏*), 369
ESP_BLE_MESH_MODEL_ID_SCENE_SRV (*C 宏*), 369
ESP_BLE_MESH_MODEL_ID_SCHEDULER_CLI (*C 宏*), 369
ESP_BLE_MESH_MODEL_ID_SCHEDULER_SETUP_SRV (*C 宏*), 369
ESP_BLE_MESH_MODEL_ID_SCHEDULER_SRV (*C 宏*), 369
ESP_BLE_MESH_MODEL_ID_SENSOR_CLI (*C 宏*), 368
ESP_BLE_MESH_MODEL_ID_SENSOR_SETUP_SRV (*C 宏*), 368
ESP_BLE_MESH_MODEL_ID_SENSOR_SRV (*C 宏*), 368
ESP_BLE_MESH_MODEL_ID_TIME_CLI (*C 宏*), 368
ESP_BLE_MESH_MODEL_ID_TIME_SETUP_SRV (*C 宏*), 368
ESP_BLE_MESH_MODEL_ID_TIME_SRV (*C 宏*), 368
ESP_BLE_MESH_MODEL_LIGHT_CTL_CLI (*C 宏*), 540
ESP_BLE_MESH_MODEL_LIGHT_CTL_SETUP_SRV (*C 宏*), 541
ESP_BLE_MESH_MODEL_LIGHT_CTL_SRV (*C 宏*), 541
ESP_BLE_MESH_MODEL_LIGHT_CTL_TEMP_SRV (*C 宏*), 541
ESP_BLE_MESH_MODEL_LIGHT_HSL_CLI (*C 宏*), 540
ESP_BLE_MESH_MODEL_LIGHT_HSL_HUE_SRV (*C 宏*), 542
ESP_BLE_MESH_MODEL_LIGHT_HSL_SAT_SRV (*C 宏*), 542
ESP_BLE_MESH_MODEL_LIGHT_HSL_SETUP_SRV (*C 宏*), 542
ESP_BLE_MESH_MODEL_LIGHT_HSL_SRV (*C 宏*), 541
ESP_BLE_MESH_MODEL_LIGHT_LC_CLI (*C 宏*), 540
ESP_BLE_MESH_MODEL_LIGHT_LC_SETUP_SRV (*C 宏*), 543
ESP_BLE_MESH_MODEL_LIGHT_LC_SRV (*C 宏*), 543
ESP_BLE_MESH_MODEL_LIGHT_LIGHTNESS_CLI (*C 宏*), 540
ESP_BLE_MESH_MODEL_LIGHT_LIGHTNESS_SETUP_SRV (*C 宏*), 541
ESP_BLE_MESH_MODEL_LIGHT_LIGHTNESS_SRV (*C 宏*), 540
ESP_BLE_MESH_MODEL_LIGHT_XYL_CLI (*C 宏*), 540
ESP_BLE_MESH_MODEL_LIGHT_XYL_SETUP_SRV (*C 宏*), 542
ESP_BLE_MESH_MODEL_LIGHT_XYL_SRV (*C 宏*), 542
esp_ble_mesh_model_msg_opcode_init (*C++ function*), 390
ESP_BLE_MESH_MODEL_NONE (*C 宏*), 367
ESP_BLE_MESH_MODEL_OP (*C 宏*), 367
ESP_BLE_MESH_MODEL_OP_1 (*C 宏*), 366
ESP_BLE_MESH_MODEL_OP_2 (*C 宏*), 366
ESP_BLE_MESH_MODEL_OP_3 (*C 宏*), 366
ESP_BLE_MESH_MODEL_OP_APP_KEY_ADD (*C 宏*), 370
ESP_BLE_MESH_MODEL_OP_APP_KEY_DELETE (*C 宏*), 371
ESP_BLE_MESH_MODEL_OP_APP_KEY_GET (*C 宏*), 370
ESP_BLE_MESH_MODEL_OP_APP_KEY_LIST (*C 宏*), 371
ESP_BLE_MESH_MODEL_OP_APP_KEY_STATUS (*C 宏*), 371
ESP_BLE_MESH_MODEL_OP_APP_KEY_UPDATE (*C 宏*), 371
ESP_BLE_MESH_MODEL_OP_ATTENTION_GET (*C 宏*), 372
ESP_BLE_MESH_MODEL_OP_ATTENTION_SET (*C 宏*), 373
ESP_BLE_MESH_MODEL_OP_ATTENTION_SET_UNACK (*C 宏*), 373
ESP_BLE_MESH_MODEL_OP_ATTENTION_STATUS (*C 宏*), 373
ESP_BLE_MESH_MODEL_OP_BEACON_GET (*C 宏*),

369
ESP_BLE_MESH_MODEL_OP_BEACON_SET (C 宏), 370
ESP_BLE_MESH_MODEL_OP_BEACON_STATUS (C 宏), 371
ESP_BLE_MESH_MODEL_OP_COMPOSITION_DATA_GET (C 宏), 369
ESP_BLE_MESH_MODEL_OP_COMPOSITION_DATA_STATUS (C 宏), 371
ESP_BLE_MESH_MODEL_OP_DEFAULT_TTL_GET (C 宏), 369
ESP_BLE_MESH_MODEL_OP_DEFAULT_TTL_SET (C 宏), 370
ESP_BLE_MESH_MODEL_OP_DEFAULT_TTL_STATUS (C 宏), 371
ESP_BLE_MESH_MODEL_OP_END (C 宏), 367
ESP_BLE_MESH_MODEL_OP_FRIEND_GET (C 宏), 369
ESP_BLE_MESH_MODEL_OP_FRIEND_SET (C 宏), 371
ESP_BLE_MESH_MODEL_OP_FRIEND_STATUS (C 宏), 372
ESP_BLE_MESH_MODEL_OP_GATT_PROXY_GET (C 宏), 369
ESP_BLE_MESH_MODEL_OP_GATT_PROXY_SET (C 宏), 370
ESP_BLE_MESH_MODEL_OP_GATT_PROXY_STATUS (C 宏), 371
ESP_BLE_MESH_MODEL_OP_GEN_ADMIN_PROPERTIES_GET (C 宏), 374
ESP_BLE_MESH_MODEL_OP_GEN_ADMIN_PROPERTIES_STATUS (C 宏), 374
ESP_BLE_MESH_MODEL_OP_GEN_ADMIN_PROPERTY_GET (C 宏), 374
ESP_BLE_MESH_MODEL_OP_GEN_ADMIN_PROPERTY_SET (C 宏), 374
ESP_BLE_MESH_MODEL_OP_GEN_ADMIN_PROPERTY_SET_UNACK (C 宏), 374
ESP_BLE_MESH_MODEL_OP_GEN_ADMIN_PROPERTY_STATUS (C 宏), 374
ESP_BLE_MESH_MODEL_OP_GEN_BATTERY_GET (C 宏), 374
ESP_BLE_MESH_MODEL_OP_GEN_BATTERY_STATUS (C 宏), 374
ESP_BLE_MESH_MODEL_OP_GEN_CLIENT_PROPERTIES_GET (C 宏), 375
ESP_BLE_MESH_MODEL_OP_GEN_CLIENT_PROPERTIES_STATUS (C 宏), 375
ESP_BLE_MESH_MODEL_OP_GEN_DEF_TRANS_TIME_GET (C 宏), 373
ESP_BLE_MESH_MODEL_OP_GEN_DEF_TRANS_TIME_SET (C 宏), 373
ESP_BLE_MESH_MODEL_OP_GEN_DEF_TRANS_TIME_SET_UNACK (C 宏), 373
ESP_BLE_MESH_MODEL_OP_GEN_DEF_TRANS_TIME_STATUS (C 宏), 373
ESP_BLE_MESH_MODEL_OP_GEN_DELTA_SET (C 宏), 373
ESP_BLE_MESH_MODEL_OP_GEN_DELTA_SET_UNACK (C 宏), 373
ESP_BLE_MESH_MODEL_OP_GEN_LEVEL_GET (C 宏), 373
ESP_BLE_MESH_MODEL_OP_GEN_LEVEL_SET (C 宏), 373
ESP_BLE_MESH_MODEL_OP_GEN_LEVEL_SET_UNACK (C 宏), 373
ESP_BLE_MESH_MODEL_OP_GEN_LEVEL_STATUS (C 宏), 373
ESP_BLE_MESH_MODEL_OP_GEN_LOC_GLOBAL_GET (C 宏), 374
ESP_BLE_MESH_MODEL_OP_GEN_LOC_GLOBAL_SET (C 宏), 374
ESP_BLE_MESH_MODEL_OP_GEN_LOC_GLOBAL_SET_UNACK (C 宏), 374
ESP_BLE_MESH_MODEL_OP_GEN_LOC_GLOBAL_STATUS (C 宏), 374
ESP_BLE_MESH_MODEL_OP_GEN_LOC_LOCAL_GET (C 宏), 374
ESP_BLE_MESH_MODEL_OP_GEN_LOC_LOCAL_SET (C 宏), 374
ESP_BLE_MESH_MODEL_OP_GEN_LOC_LOCAL_SET_UNACK (C 宏), 374
ESP_BLE_MESH_MODEL_OP_GEN_LOC_LOCAL_STATUS (C 宏), 374
ESP_BLE_MESH_MODEL_OP_GEN_MANUFACTURER_PROPERTIES_GET (C 宏), 374
ESP_BLE_MESH_MODEL_OP_GEN_MANUFACTURER_PROPERTIES_STATUS (C 宏), 374
ESP_BLE_MESH_MODEL_OP_GEN_MANUFACTURER_PROPERTY_GET (C 宏), 374
ESP_BLE_MESH_MODEL_OP_GEN_MANUFACTURER_PROPERTY_SET (C 宏), 374
ESP_BLE_MESH_MODEL_OP_GEN_MANUFACTURER_PROPERTY_SET_UNACK (C 宏), 374
ESP_BLE_MESH_MODEL_OP_GEN_MANUFACTURER_PROPERTY_STATUS (C 宏), 374
ESP_BLE_MESH_MODEL_OP_GEN_MOVE_SET (C 宏), 373
ESP_BLE_MESH_MODEL_OP_GEN_MOVE_SET_UNACK (C 宏), 373
ESP_BLE_MESH_MODEL_OP_GEN_ONOFF_GET (C 宏), 373
ESP_BLE_MESH_MODEL_OP_GEN_ONOFF_SET (C 宏), 373
ESP_BLE_MESH_MODEL_OP_GEN_ONOFF_SET_UNACK (C 宏), 373
ESP_BLE_MESH_MODEL_OP_GEN_ONOFF_STATUS (C 宏), 373
ESP_BLE_MESH_MODEL_OP_GEN_ONPOWERUP_GET (C 宏), 373
ESP_BLE_MESH_MODEL_OP_GEN_ONPOWERUP_SET (C 宏), 373
ESP_BLE_MESH_MODEL_OP_GEN_ONPOWERUP_SET_UNACK (C 宏), 373
ESP_BLE_MESH_MODEL_OP_GEN_ONPOWERUP_STATUS (C 宏), 373

ESP_BLE_MESH_MODEL_OP_GEN_POWER_DEFAULT_SET (C 宏), 374
ESP_BLE_MESH_MODEL_OP_GEN_POWER_DEFAULT_SET_UNACK (C 宏), 374
ESP_BLE_MESH_MODEL_OP_GEN_POWER_DEFAULT_STATUS (C 宏), 374
ESP_BLE_MESH_MODEL_OP_GEN_POWER_LAST_GET (C 宏), 374
ESP_BLE_MESH_MODEL_OP_GEN_POWER_LAST_STATUS (C 宏), 374
ESP_BLE_MESH_MODEL_OP_GEN_POWER_LEVEL_GET (C 宏), 373
ESP_BLE_MESH_MODEL_OP_GEN_POWER_LEVEL_SET (C 宏), 373
ESP_BLE_MESH_MODEL_OP_GEN_POWER_LEVEL_SET_UNACK (C 宏), 374
ESP_BLE_MESH_MODEL_OP_GEN_POWER_LEVEL_STATUS (C 宏), 374
ESP_BLE_MESH_MODEL_OP_GEN_POWER_RANGE_GET (C 宏), 374
ESP_BLE_MESH_MODEL_OP_GEN_POWER_RANGE_SET (C 宏), 374
ESP_BLE_MESH_MODEL_OP_GEN_POWER_RANGE_SET_UNACK (C 宏), 374
ESP_BLE_MESH_MODEL_OP_GEN_POWER_RANGE_STATUS (C 宏), 374
ESP_BLE_MESH_MODEL_OP_GEN_USER_PROPERTIES_GET (C 宏), 374
ESP_BLE_MESH_MODEL_OP_GEN_USER_PROPERTIES_STATUS (C 宏), 375
ESP_BLE_MESH_MODEL_OP_GEN_USER_PROPERTY_GET (C 宏), 375
ESP_BLE_MESH_MODEL_OP_GEN_USER_PROPERTY_SET (C 宏), 375
ESP_BLE_MESH_MODEL_OP_GEN_USER_PROPERTY_SET_UNACK (C 宏), 375
ESP_BLE_MESH_MODEL_OP_GEN_USER_PROPERTY_STATUS (C 宏), 375
ESP_BLE_MESH_MODEL_OP_HEALTH_CURRENT_STATUS (C 宏), 373
ESP_BLE_MESH_MODEL_OP_HEALTH_FAULT_CLEAR (C 宏), 372
ESP_BLE_MESH_MODEL_OP_HEALTH_FAULT_CLEAR_UNACK (C 宏), 372
ESP_BLE_MESH_MODEL_OP_HEALTH_FAULT_GET (C 宏), 372
ESP_BLE_MESH_MODEL_OP_HEALTH_FAULT_STATUS (C 宏), 373
ESP_BLE_MESH_MODEL_OP_HEALTH_FAULT_TEST (C 宏), 372
ESP_BLE_MESH_MODEL_OP_HEALTH_FAULT_TEST_UNACK (C 宏), 373
ESP_BLE_MESH_MODEL_OP_HEALTH_PERIOD_GET (C 宏), 372
ESP_BLE_MESH_MODEL_OP_HEALTH_PERIOD_SET (C 宏), 373
ESP_BLE_MESH_MODEL_OP_HEALTH_PERIOD_SET_UNACK (C 宏), 373
ESP_BLE_MESH_MODEL_OP_HEALTH_PERIOD_STATUS (C 宏), 373
ESP_BLE_MESH_MODEL_OP_HEARTBEAT_PUB_GET (C 宏), 369
ESP_BLE_MESH_MODEL_OP_HEARTBEAT_PUB_SET (C 宏), 371
ESP_BLE_MESH_MODEL_OP_HEARTBEAT_PUB_STATUS (C 宏), 372
ESP_BLE_MESH_MODEL_OP_HEARTBEAT_SUB_GET (C 宏), 369
ESP_BLE_MESH_MODEL_OP_HEARTBEAT_SUB_SET (C 宏), 371
ESP_BLE_MESH_MODEL_OP_HEARTBEAT_SUB_STATUS (C 宏), 372
ESP_BLE_MESH_MODEL_OP_KEY_REFRESH_PHASE_GET (C 宏), 370
ESP_BLE_MESH_MODEL_OP_KEY_REFRESH_PHASE_SET (C 宏), 371
ESP_BLE_MESH_MODEL_OP_KEY_REFRESH_PHASE_STATUS (C 宏), 372
ESP_BLE_MESH_MODEL_OP_LIGHT_CTL_DEFAULT_GET (C 宏), 377
ESP_BLE_MESH_MODEL_OP_LIGHT_CTL_DEFAULT_SET (C 宏), 377
ESP_BLE_MESH_MODEL_OP_LIGHT_CTL_DEFAULT_SET_UNACK (C 宏), 377
ESP_BLE_MESH_MODEL_OP_LIGHT_CTL_DEFAULT_STATUS (C 宏), 377
ESP_BLE_MESH_MODEL_OP_LIGHT_CTL_GET (C 宏), 376
ESP_BLE_MESH_MODEL_OP_LIGHT_CTL_SET (C 宏), 377
ESP_BLE_MESH_MODEL_OP_LIGHT_CTL_SET_UNACK (C 宏), 377
ESP_BLE_MESH_MODEL_OP_LIGHT_CTL_STATUS (C 宏), 377
ESP_BLE_MESH_MODEL_OP_LIGHT_CTL_TEMPERATURE_GET (C 宏), 377
ESP_BLE_MESH_MODEL_OP_LIGHT_CTL_TEMPERATURE_RANGE_GET (C 宏), 377
ESP_BLE_MESH_MODEL_OP_LIGHT_CTL_TEMPERATURE_RANGE_SET (C 宏), 377
ESP_BLE_MESH_MODEL_OP_LIGHT_CTL_TEMPERATURE_RANGE_SET_UNACK (C 宏), 377
ESP_BLE_MESH_MODEL_OP_LIGHT_CTL_TEMPERATURE_RANGE_STATUS (C 宏), 377
ESP_BLE_MESH_MODEL_OP_LIGHT_CTL_TEMPERATURE_SET (C 宏), 377
ESP_BLE_MESH_MODEL_OP_LIGHT_CTL_TEMPERATURE_SET_UNACK (C 宏), 377
ESP_BLE_MESH_MODEL_OP_LIGHT_CTL_TEMPERATURE_STATUS (C 宏), 377
ESP_BLE_MESH_MODEL_OP_LIGHT_HSL_DEFAULT_GET (C 宏), 377
ESP_BLE_MESH_MODEL_OP_LIGHT_HSL_DEFAULT_SET (C 宏), 377

ESP_BLE_MESH_MODEL_OP_LIGHT_HSL_DEFAULT_SET_UNACK (C 宏), 377
ESP_BLE_MESH_MODEL_OP_LIGHT_HSL_DEFAULT_STATUS (C 宏), 377
ESP_BLE_MESH_MODEL_OP_LIGHT_HSL_GET (C 宏), 377
ESP_BLE_MESH_MODEL_OP_LIGHT_HSL_HUE_GET (C 宏), 377
ESP_BLE_MESH_MODEL_OP_LIGHT_HSL_HUE_SET (C 宏), 377
ESP_BLE_MESH_MODEL_OP_LIGHT_HSL_HUE_SET_UNACK (C 宏), 377
ESP_BLE_MESH_MODEL_OP_LIGHT_HSL_HUE_STATUS (C 宏), 377
ESP_BLE_MESH_MODEL_OP_LIGHT_HSL_RANGE_GET (C 宏), 377
ESP_BLE_MESH_MODEL_OP_LIGHT_HSL_RANGE_SET (C 宏), 377
ESP_BLE_MESH_MODEL_OP_LIGHT_HSL_RANGE_SET_UNACK (C 宏), 377
ESP_BLE_MESH_MODEL_OP_LIGHT_HSL_RANGE_STATUS (C 宏), 377
ESP_BLE_MESH_MODEL_OP_LIGHT_HSL_SATURATION_GET (C 宏), 377
ESP_BLE_MESH_MODEL_OP_LIGHT_HSL_SATURATION_SET (C 宏), 377
ESP_BLE_MESH_MODEL_OP_LIGHT_HSL_SATURATION_SET_UNACK (C 宏), 377
ESP_BLE_MESH_MODEL_OP_LIGHT_HSL_SATURATION_STATUS (C 宏), 377
ESP_BLE_MESH_MODEL_OP_LIGHT_HSL_SET (C 宏), 377
ESP_BLE_MESH_MODEL_OP_LIGHT_HSL_SET_UNACK (C 宏), 377
ESP_BLE_MESH_MODEL_OP_LIGHT_HSL_STATUS (C 宏), 377
ESP_BLE_MESH_MODEL_OP_LIGHT_HSL_TARGET_GET (C 宏), 377
ESP_BLE_MESH_MODEL_OP_LIGHT_HSL_TARGET_STATUS (C 宏), 377
ESP_BLE_MESH_MODEL_OP_LIGHT_LC_LIGHT_ONOFF_GET (C 宏), 378
ESP_BLE_MESH_MODEL_OP_LIGHT_LC_LIGHT_ONOFF_SET (C 宏), 378
ESP_BLE_MESH_MODEL_OP_LIGHT_LC_LIGHT_ONOFF_SET_UNACK (C 宏), 378
ESP_BLE_MESH_MODEL_OP_LIGHT_LC_LIGHT_ONOFF_STATUS (C 宏), 378
ESP_BLE_MESH_MODEL_OP_LIGHT_LC_MODE_GET (C 宏), 378
ESP_BLE_MESH_MODEL_OP_LIGHT_LC_MODE_SET (C 宏), 378
ESP_BLE_MESH_MODEL_OP_LIGHT_LC_MODE_SET_UNACK (C 宏), 378
ESP_BLE_MESH_MODEL_OP_LIGHT_LC_MODE_STATUS (C 宏), 378
ESP_BLE_MESH_MODEL_OP_LIGHT_LC_OM_GET (C 宏), 378
ESP_BLE_MESH_MODEL_OP_LIGHT_LC_OM_SET (C 宏), 378
ESP_BLE_MESH_MODEL_OP_LIGHT_LC_OM_SET_UNACK (C 宏), 378
ESP_BLE_MESH_MODEL_OP_LIGHT_LC_OM_STATUS (C 宏), 378
ESP_BLE_MESH_MODEL_OP_LIGHT_LC_PROPERTY_GET (C 宏), 378
ESP_BLE_MESH_MODEL_OP_LIGHT_LC_PROPERTY_SET (C 宏), 378
ESP_BLE_MESH_MODEL_OP_LIGHT_LC_PROPERTY_SET_UNACK (C 宏), 378
ESP_BLE_MESH_MODEL_OP_LIGHT_LC_PROPERTY_STATUS (C 宏), 378
ESP_BLE_MESH_MODEL_OP_LIGHT_LIGHTNESS_DEFAULT_GET (C 宏), 376
ESP_BLE_MESH_MODEL_OP_LIGHT_LIGHTNESS_DEFAULT_SET (C 宏), 376
ESP_BLE_MESH_MODEL_OP_LIGHT_LIGHTNESS_DEFAULT_SET_UNACK (C 宏), 376
ESP_BLE_MESH_MODEL_OP_LIGHT_LIGHTNESS_DEFAULT_STATUS (C 宏), 376
ESP_BLE_MESH_MODEL_OP_LIGHT_LIGHTNESS_GET (C 宏), 376
ESP_BLE_MESH_MODEL_OP_LIGHT_LIGHTNESS_LAST_GET (C 宏), 376
ESP_BLE_MESH_MODEL_OP_LIGHT_LIGHTNESS_LAST_STATUS (C 宏), 376
ESP_BLE_MESH_MODEL_OP_LIGHT_LIGHTNESS_LINEAR_GET (C 宏), 376
ESP_BLE_MESH_MODEL_OP_LIGHT_LIGHTNESS_LINEAR_SET (C 宏), 376
ESP_BLE_MESH_MODEL_OP_LIGHT_LIGHTNESS_LINEAR_SET_UNACK (C 宏), 376
ESP_BLE_MESH_MODEL_OP_LIGHT_LIGHTNESS_LINEAR_STATUS (C 宏), 376
ESP_BLE_MESH_MODEL_OP_LIGHT_LIGHTNESS_RANGE_GET (C 宏), 376
ESP_BLE_MESH_MODEL_OP_LIGHT_LIGHTNESS_RANGE_SET (C 宏), 376
ESP_BLE_MESH_MODEL_OP_LIGHT_LIGHTNESS_RANGE_SET_UNACK (C 宏), 376
ESP_BLE_MESH_MODEL_OP_LIGHT_LIGHTNESS_RANGE_STATUS (C 宏), 376
ESP_BLE_MESH_MODEL_OP_LIGHT_LIGHTNESS_SET (C 宏), 376
ESP_BLE_MESH_MODEL_OP_LIGHT_LIGHTNESS_SET_UNACK (C 宏), 376
ESP_BLE_MESH_MODEL_OP_LIGHT_LIGHTNESS_STATUS (C 宏), 376
ESP_BLE_MESH_MODEL_OP_LIGHT_XYL_DEFAULT_GET (C 宏), 378
ESP_BLE_MESH_MODEL_OP_LIGHT_XYL_DEFAULT_SET (C 宏), 378
ESP_BLE_MESH_MODEL_OP_LIGHT_XYL_DEFAULT_SET_UNACK (C 宏), 378
ESP_BLE_MESH_MODEL_OP_LIGHT_XYL_DEFAULT_STATUS (C 宏), 378

ESP_BLE_MESH_MODEL_OP_LIGHT_XYL_GET (C 宏), 378
ESP_BLE_MESH_MODEL_OP_LIGHT_XYL_RANGE_GET (C 宏), 378
ESP_BLE_MESH_MODEL_OP_LIGHT_XYL_RANGE_SET (C 宏), 378
ESP_BLE_MESH_MODEL_OP_LIGHT_XYL_RANGE_SET_UNACK (C 宏), 378
ESP_BLE_MESH_MODEL_OP_LIGHT_XYL_RANGE_STATUS (C 宏), 378
ESP_BLE_MESH_MODEL_OP_LIGHT_XYL_SET (C 宏), 378
ESP_BLE_MESH_MODEL_OP_LIGHT_XYL_SET_UNACK (C 宏), 378
ESP_BLE_MESH_MODEL_OP_LIGHT_XYL_STATUS (C 宏), 378
ESP_BLE_MESH_MODEL_OP_LIGHT_XYL_TARGET_GET (C 宏), 378
ESP_BLE_MESH_MODEL_OP_LIGHT_XYL_TARGET_STATUS (C 宏), 378
ESP_BLE_MESH_MODEL_OP_LPN_POLLTIMEOUT_GET (C 宏), 370
ESP_BLE_MESH_MODEL_OP_LPN_POLLTIMEOUT_STATUS (C 宏), 372
ESP_BLE_MESH_MODEL_OP_MODEL_APP_BIND (C 宏), 371
ESP_BLE_MESH_MODEL_OP_MODEL_APP_STATUS (C 宏), 372
ESP_BLE_MESH_MODEL_OP_MODEL_APP_UNBIND (C 宏), 371
ESP_BLE_MESH_MODEL_OP_MODEL_PUB_GET (C 宏), 369
ESP_BLE_MESH_MODEL_OP_MODEL_PUB_SET (C 宏), 370
ESP_BLE_MESH_MODEL_OP_MODEL_PUB_STATUS (C 宏), 371
ESP_BLE_MESH_MODEL_OP_MODEL_PUB_VIRTUAL_ADDR_GET (C 宏), 371
ESP_BLE_MESH_MODEL_OP_MODEL_SUB_ADD (C 宏), 370
ESP_BLE_MESH_MODEL_OP_MODEL_SUB_DELETE (C 宏), 370
ESP_BLE_MESH_MODEL_OP_MODEL_SUB_DELETE_ALL (C 宏), 371
ESP_BLE_MESH_MODEL_OP_MODEL_SUB_OVERWRITE (C 宏), 370
ESP_BLE_MESH_MODEL_OP_MODEL_SUB_STATUS (C 宏), 371
ESP_BLE_MESH_MODEL_OP_MODEL_SUB_VIRTUAL_ADDR_ADD (C 宏), 370
ESP_BLE_MESH_MODEL_OP_MODEL_SUB_VIRTUAL_ADDR_DELETE (C 宏), 370
ESP_BLE_MESH_MODEL_OP_MODEL_SUB_VIRTUAL_ADDR_OVERWRITE (C 宏), 370
ESP_BLE_MESH_MODEL_OP_NET_KEY_ADD (C 宏), 370
ESP_BLE_MESH_MODEL_OP_NET_KEY_DELETE (C 宏), 371
ESP_BLE_MESH_MODEL_OP_NET_KEY_GET (C 宏), 370
ESP_BLE_MESH_MODEL_OP_NET_KEY_LIST (C 宏), 371
ESP_BLE_MESH_MODEL_OP_NET_KEY_STATUS (C 宏), 371
ESP_BLE_MESH_MODEL_OP_NET_KEY_UPDATE (C 宏), 371
ESP_BLE_MESH_MODEL_OP_NETWORK_TRANSMIT_GET (C 宏), 370
ESP_BLE_MESH_MODEL_OP_NETWORK_TRANSMIT_SET (C 宏), 371
ESP_BLE_MESH_MODEL_OP_NETWORK_TRANSMIT_STATUS (C 宏), 372
ESP_BLE_MESH_MODEL_OP_NODE_IDENTITY_GET (C 宏), 370
ESP_BLE_MESH_MODEL_OP_NODE_IDENTITY_SET (C 宏), 371
ESP_BLE_MESH_MODEL_OP_NODE_IDENTITY_STATUS (C 宏), 372
ESP_BLE_MESH_MODEL_OP_NODE_RESET (C 宏), 371
ESP_BLE_MESH_MODEL_OP_NODE_RESET_STATUS (C 宏), 372
ESP_BLE_MESH_MODEL_OP_RELAY_GET (C 宏), 369
ESP_BLE_MESH_MODEL_OP_RELAY_SET (C 宏), 370
ESP_BLE_MESH_MODEL_OP_RELAY_STATUS (C 宏), 371
ESP_BLE_MESH_MODEL_OP_SCENE_DELETE (C 宏), 376
ESP_BLE_MESH_MODEL_OP_SCENE_DELETE_UNACK (C 宏), 376
ESP_BLE_MESH_MODEL_OP_SCENE_GET (C 宏), 376
ESP_BLE_MESH_MODEL_OP_SCENE_RECALL (C 宏), 376
ESP_BLE_MESH_MODEL_OP_SCENE_RECALL_UNACK (C 宏), 376
ESP_BLE_MESH_MODEL_OP_SCENE_REGISTER_GET (C 宏), 376
ESP_BLE_MESH_MODEL_OP_SCENE_REGISTER_STATUS (C 宏), 376
ESP_BLE_MESH_MODEL_OP_SCENE_STATUS (C 宏), 376
ESP_BLE_MESH_MODEL_OP_SCENE_STORE (C 宏), 376
ESP_BLE_MESH_MODEL_OP_SCENE_STORE_UNACK (C 宏), 376
ESP_BLE_MESH_MODEL_OP_SCHEDULER_ACT_GET (C 宏), 376
ESP_BLE_MESH_MODEL_OP_SCHEDULER_ACT_SET (C 宏), 376
ESP_BLE_MESH_MODEL_OP_SCHEDULER_ACT_SET_UNACK (C 宏), 376
ESP_BLE_MESH_MODEL_OP_SCHEDULER_ACT_STATUS (C 宏), 376

ESP_BLE_MESH_MODEL_OP_SCHEDULER_GET (*C 宏*), 376
ESP_BLE_MESH_MODEL_OP_SCHEDULER_STATUS (*C 宏*), 376
ESP_BLE_MESH_MODEL_OP_SENSOR_CADENCE_GET (*C 宏*), 375
ESP_BLE_MESH_MODEL_OP_SENSOR_CADENCE_SET (*C 宏*), 375
ESP_BLE_MESH_MODEL_OP_SENSOR_CADENCE_SET_UNACK (*C 宏*), 375
ESP_BLE_MESH_MODEL_OP_SENSOR_CADENCE_STATUS (*C 宏*), 375
ESP_BLE_MESH_MODEL_OP_SENSOR_COLUMN_GET (*C 宏*), 375
ESP_BLE_MESH_MODEL_OP_SENSOR_COLUMN_STATUS (*C 宏*), 375
ESP_BLE_MESH_MODEL_OP_SENSOR_DESCRIPTOR_GET (*C 宏*), 375
ESP_BLE_MESH_MODEL_OP_SENSOR_DESCRIPTOR_STATUS (*C 宏*), 375
ESP_BLE_MESH_MODEL_OP_SENSOR_GET (*C 宏*), 375
ESP_BLE_MESH_MODEL_OP_SENSOR_SERIES_GET (*C 宏*), 375
ESP_BLE_MESH_MODEL_OP_SENSOR_SERIES_STATUS (*C 宏*), 375
ESP_BLE_MESH_MODEL_OP_SENSOR_SETTING_GET (*C 宏*), 375
ESP_BLE_MESH_MODEL_OP_SENSOR_SETTING_SET (*C 宏*), 375
ESP_BLE_MESH_MODEL_OP_SENSOR_SETTING_SET_UNACK (*C 宏*), 375
ESP_BLE_MESH_MODEL_OP_SENSOR_SETTING_STATUS (*C 宏*), 375
ESP_BLE_MESH_MODEL_OP_SENSOR_SETTINGS_GET (*C 宏*), 375
ESP_BLE_MESH_MODEL_OP_SENSOR_SETTINGS_STATUS (*C 宏*), 375
ESP_BLE_MESH_MODEL_OP_SENSOR_STATUS (*C 宏*), 375
ESP_BLE_MESH_MODEL_OP_SIG_MODEL_APP_GET (*C 宏*), 370
ESP_BLE_MESH_MODEL_OP_SIG_MODEL_APP_LIST (*C 宏*), 372
ESP_BLE_MESH_MODEL_OP_SIG_MODEL_SUB_GET (*C 宏*), 370
ESP_BLE_MESH_MODEL_OP_SIG_MODEL_SUB_LIST (*C 宏*), 371
esp_ble_mesh_model_op_t (*C++ class*), 357
esp_ble_mesh_model_op_t::min_len (*C++ member*), 358
esp_ble_mesh_model_op_t::opcode (*C++ member*), 358
esp_ble_mesh_model_op_t::param_cb (*C++ member*), 358
ESP_BLE_MESH_MODEL_OP_TAI_UTC_DELTA_GET (*C 宏*), 375
ESP_BLE_MESH_MODEL_OP_TAI_UTC_DELTA_SET (*C 宏*), 375
ESP_BLE_MESH_MODEL_OP_TAI_UTC_DELTA_STATUS (*C 宏*), 375
ESP_BLE_MESH_MODEL_OP_TIME_GET (*C 宏*), 375
ESP_BLE_MESH_MODEL_OP_TIME_ROLE_GET (*C 宏*), 375
ESP_BLE_MESH_MODEL_OP_TIME_ROLE_SET (*C 宏*), 375
ESP_BLE_MESH_MODEL_OP_TIME_ROLE_STATUS (*C 宏*), 375
ESP_BLE_MESH_MODEL_OP_TIME_SET (*C 宏*), 375
ESP_BLE_MESH_MODEL_OP_TIME_STATUS (*C 宏*), 375
ESP_BLE_MESH_MODEL_OP_TIME_ZONE_GET (*C 宏*), 375
ESP_BLE_MESH_MODEL_OP_TIME_ZONE_SET (*C 宏*), 375
ESP_BLE_MESH_MODEL_OP_TIME_ZONE_STATUS (*C 宏*), 375
ESP_BLE_MESH_MODEL_OP_VENDOR_MODEL_APP_GET (*C 宏*), 370
ESP_BLE_MESH_MODEL_OP_VENDOR_MODEL_APP_LIST (*C 宏*), 372
ESP_BLE_MESH_MODEL_OP_VENDOR_MODEL_SUB_GET (*C 宏*), 370
ESP_BLE_MESH_MODEL_OP_VENDOR_MODEL_SUB_LIST (*C 宏*), 371
ESP_BLE_MESH_MODEL_OPERATION_EVT (*C++ enumerator*), 386
ESP_BLE_MESH_MODEL_PUB_DEFINE (*C 宏*), 367
esp_ble_mesh_model_pub_t (*C++ class*), 356
esp_ble_mesh_model_pub_t::app_idx (*C++ member*), 357
esp_ble_mesh_model_pub_t::count (*C++ member*), 357
esp_ble_mesh_model_pub_t::cred (*C++ member*), 357
esp_ble_mesh_model_pub_t::dev_role (*C++ member*), 357
esp_ble_mesh_model_pub_t::fast_period (*C++ member*), 357
esp_ble_mesh_model_pub_t::model (*C++ member*), 357
esp_ble_mesh_model_pub_t::msg (*C++ member*), 357
esp_ble_mesh_model_pub_t::period (*C++ member*), 357
esp_ble_mesh_model_pub_t::period_div (*C++ member*), 357
esp_ble_mesh_model_pub_t::period_start (*C++ member*), 357
esp_ble_mesh_model_pub_t::publish_addr (*C++ member*), 357
esp_ble_mesh_model_pub_t::retransmit (*C++ member*), 357
esp_ble_mesh_model_pub_t::send_rel

(C++ *member*), 357
esp_ble_mesh_model_pub_t::timer (C++ *member*), 357
esp_ble_mesh_model_pub_t::ttl (C++ *member*), 357
esp_ble_mesh_model_pub_t::update (C++ *member*), 357
esp_ble_mesh_model_publish (C++ *function*), 391
ESP_BLE_MESH_MODEL_PUBLISH_COMP_EVT (C++ *enumerator*), 386
ESP_BLE_MESH_MODEL_PUBLISH_UPDATE_EVT (C++ *enumerator*), 386
ESP_BLE_MESH_MODEL_SCENE_CLI (C 宏), 499
ESP_BLE_MESH_MODEL_SCENE_SETUP_SRV (C 宏), 500
ESP_BLE_MESH_MODEL_SCENE_SRV (C 宏), 499
ESP_BLE_MESH_MODEL_SCHEDULER_CLI (C 宏), 499
ESP_BLE_MESH_MODEL_SCHEDULER_SETUP_SRV (C 宏), 500
ESP_BLE_MESH_MODEL_SCHEDULER_SRV (C 宏), 500
ESP_BLE_MESH_MODEL_SEND_COMP_EVT (C++ *enumerator*), 386
ESP_BLE_MESH_MODEL_SENSOR_CLI (C 宏), 478
ESP_BLE_MESH_MODEL_SENSOR_SETUP_SRV (C 宏), 478
ESP_BLE_MESH_MODEL_SENSOR_SRV (C 宏), 478
ESP_BLE_MESH_MODEL_STATUS_CANNOT_SET_RANGE_MAX (C 宏), 378
ESP_BLE_MESH_MODEL_STATUS_CANNOT_SET_RANGE_MIN (C 宏), 378
ESP_BLE_MESH_MODEL_STATUS_SUCCESS (C 宏), 378
esp_ble_mesh_model_status_t (C++ *type*), 380
esp_ble_mesh_model_subscribe_group_addr (C++ *function*), 388
ESP_BLE_MESH_MODEL_SUBSCRIBE_GROUP_ADDR_COMP_EVT (C++ *enumerator*), 385
esp_ble_mesh_model_t (C++ *type*), 379
ESP_BLE_MESH_MODEL_TIME_CLI (C 宏), 499
ESP_BLE_MESH_MODEL_TIME_SETUP_SRV (C 宏), 499
ESP_BLE_MESH_MODEL_TIME_SRV (C 宏), 499
esp_ble_mesh_model_unsubscribe_group_addr (C++ *function*), 388
ESP_BLE_MESH_MODEL_UNSUBSCRIBE_GROUP_ADDR_COMP_EVT (C++ *enumerator*), 385
esp_ble_mesh_msg_ctx_t (C++ *class*), 359
esp_ble_mesh_msg_ctx_t::addr (C++ *member*), 359
esp_ble_mesh_msg_ctx_t::app_idx (C++ *member*), 359
esp_ble_mesh_msg_ctx_t::model (C++ *member*), 359
esp_ble_mesh_msg_ctx_t::net_idx (C++ *member*), 359
esp_ble_mesh_msg_ctx_t::recv_dst (C++ *member*), 359
esp_ble_mesh_msg_ctx_t::recv_op (C++ *member*), 359
esp_ble_mesh_msg_ctx_t::recv_rssi (C++ *member*), 359
esp_ble_mesh_msg_ctx_t::recv_ttl (C++ *member*), 359
esp_ble_mesh_msg_ctx_t::send_rel (C++ *member*), 359
esp_ble_mesh_msg_ctx_t::send_ttl (C++ *member*), 359
esp_ble_mesh_msg_ctx_t::srv_send (C++ *member*), 359
ESP_BLE_MESH_NET_PRIMARY (C 宏), 365
ESP_BLE_MESH_NO_FAULT (C 宏), 433
ESP_BLE_MESH_NO_INPUT (C++ *enumerator*), 380
ESP_BLE_MESH_NO_LOAD_ERROR (C 宏), 433
ESP_BLE_MESH_NO_LOAD_WARNING (C 宏), 433
ESP_BLE_MESH_NO_OOB (C++ *enumerator*), 380
ESP_BLE_MESH_NO_OUTPUT (C++ *enumerator*), 380
esp_ble_mesh_node_add_local_app_key (C++ *function*), 389
ESP_BLE_MESH_NODE_ADD_LOCAL_APP_KEY_COMP_EVT (C++ *enumerator*), 382
esp_ble_mesh_node_add_local_net_key (C++ *function*), 389
ESP_BLE_MESH_NODE_ADD_LOCAL_NET_KEY_COMP_EVT (C++ *enumerator*), 382
esp_ble_mesh_node_bind_app_key_to_local_model (C++ *function*), 389
ESP_BLE_MESH_NODE_BIND_APP_KEY_TO_MODEL_COMP_EVT (C++ *enumerator*), 382
esp_ble_mesh_node_get_local_app_key (C++ *function*), 388
esp_ble_mesh_node_get_local_net_key (C++ *function*), 388
ESP_BLE_MESH_NODE_IDENTITY_NOT_SUPPORTED (C 宏), 365
ESP_BLE_MESH_NODE_IDENTITY_RUNNING (C 宏), 365
ESP_BLE_MESH_NODE_IDENTITY_STOPPED (C 宏), 365
esp_ble_mesh_node_input_number (C++ *function*), 398
esp_ble_mesh_node_input_string (C++ *function*), 398
esp_ble_mesh_node_is_provisioned (C++ *function*), 397
esp_ble_mesh_node_local_reset (C++ *function*), 392
ESP_BLE_MESH_NODE_NAME_MAX_LEN (C 宏), 364
ESP_BLE_MESH_NODE_PROV_COMPLETE_EVT (C++ *enumerator*), 382
esp_ble_mesh_node_prov_disable (C++

function), 397
ESP_BLE_MESH_NODE_PROV_DISABLE_COMP_EVT (*C++ enumerator*), 382
esp_ble_mesh_node_prov_enable (*C++ function*), 397
ESP_BLE_MESH_NODE_PROV_ENABLE_COMP_EVT (*C++ enumerator*), 382
ESP_BLE_MESH_NODE_PROV_INPUT_EVT (*C++ enumerator*), 382
ESP_BLE_MESH_NODE_PROV_INPUT_NUMBER_COMP_EVT (*C++ enumerator*), 382
ESP_BLE_MESH_NODE_PROV_INPUT_STRING_COMP_EVT (*C++ enumerator*), 382
ESP_BLE_MESH_NODE_PROV_LINK_CLOSE_EVT (*C++ enumerator*), 382
ESP_BLE_MESH_NODE_PROV_LINK_OPEN_EVT (*C++ enumerator*), 382
ESP_BLE_MESH_NODE_PROV_OOB_PUB_KEY_EVT (*C++ enumerator*), 382
ESP_BLE_MESH_NODE_PROV_OUTPUT_NUMBER_EVT (*C++ enumerator*), 382
ESP_BLE_MESH_NODE_PROV_OUTPUT_STRING_EVT (*C++ enumerator*), 382
ESP_BLE_MESH_NODE_PROV_RESET_EVT (*C++ enumerator*), 382
ESP_BLE_MESH_NODE_PROV_SET_OOB_PUB_KEY_COMP_EVT (*C++ enumerator*), 382
ESP_BLE_MESH_NODE_PROXY_GATT_DISABLE_COMP_EVT (*C++ enumerator*), 382
ESP_BLE_MESH_NODE_PROXY_GATT_ENABLE_COMP_EVT (*C++ enumerator*), 382
ESP_BLE_MESH_NODE_PROXY_IDENTITY_ENABLE_COMP_EVT (*C++ enumerator*), 382
esp_ble_mesh_node_set_oob_pub_key (*C++ function*), 397
ESP_BLE_MESH_NODE_SET_UNPROV_DEV_NAME_COMP_EVT (*C++ enumerator*), 382
esp_ble_mesh_node_t (*C++ class*), 360
esp_ble_mesh_node_t::addr (*C++ member*), 361
esp_ble_mesh_node_t::addr_type (*C++ member*), 361
esp_ble_mesh_node_t::comp_data (*C++ member*), 361
esp_ble_mesh_node_t::comp_length (*C++ member*), 361
esp_ble_mesh_node_t::dev_key (*C++ member*), 361
esp_ble_mesh_node_t::dev_uuid (*C++ member*), 361
esp_ble_mesh_node_t::element_num (*C++ member*), 361
esp_ble_mesh_node_t::flags (*C++ member*), 361
esp_ble_mesh_node_t::iv_index (*C++ member*), 361
esp_ble_mesh_node_t::name (*C++ member*), 361
esp_ble_mesh_node_t::net_idx (*C++ member*), 361
esp_ble_mesh_node_t::oob_info (*C++ member*), 361
esp_ble_mesh_node_t::unicast_addr (*C++ member*), 361
ESP_BLE_MESH_OCTET16_LEN (*C 宏*), 364
esp_ble_mesh_octet16_t (*C++ type*), 379
ESP_BLE_MESH_OCTET8_LEN (*C 宏*), 364
esp_ble_mesh_octet8_t (*C++ type*), 379
esp_ble_mesh_oob_method_t (*C++ enum*), 380
esp_ble_mesh_opcode_config_client_get_t (*C++ type*), 379
esp_ble_mesh_opcode_config_client_set_t (*C++ type*), 379
esp_ble_mesh_opcode_config_status_t (*C++ type*), 379
esp_ble_mesh_opcode_health_client_get_t (*C++ type*), 379
esp_ble_mesh_opcode_health_client_set_t (*C++ type*), 379
esp_ble_mesh_opcode_t (*C++ type*), 380
esp_ble_mesh_output_action_t (*C++ enum*), 380
ESP_BLE_MESH_OUTPUT_OOB (*C++ enumerator*), 380
ESP_BLE_MESH_OVERFLOW_ERROR (*C 宏*), 434
ESP_BLE_MESH_OVERFLOW_WARNING (*C 宏*), 434
ESP_BLE_MESH_OVERHEAT_ERROR (*C 宏*), 433
ESP_BLE_MESH_OVERHEAT_WARNING (*C 宏*), 433
ESP_BLE_MESH_OVERLOAD_ERROR (*C 宏*), 433
ESP_BLE_MESH_OVERLOAD_WARNING (*C 宏*), 433
ESP_BLE_MESH_POWER_SUPPLY_INTERRUPTED_ERROR (*C 宏*), 433
ESP_BLE_MESH_POWER_SUPPLY_INTERRUPTED_WARNING (*C 宏*), 433
ESP_BLE_MESH_PROV (*C 宏*), 367
ESP_BLE_MESH_PROV_ADV (*C++ enumerator*), 381
esp_ble_mesh_prov_adv_cb_t (*C++ type*), 401
esp_ble_mesh_prov_bearer_t (*C++ enum*), 381
esp_ble_mesh_prov_cb_event_t (*C++ enum*), 381
esp_ble_mesh_prov_cb_param_t (*C++ union*), 333
esp_ble_mesh_prov_cb_param_t::ble_mesh_deinit_mes (*C++ class*), 338
esp_ble_mesh_prov_cb_param_t::ble_mesh_deinit_mes (*C++ member*), 338
esp_ble_mesh_prov_cb_param_t::ble_mesh_friend_fri (*C++ class*), 338
esp_ble_mesh_prov_cb_param_t::ble_mesh_friend_fri (*C++ member*), 338
esp_ble_mesh_prov_cb_param_t::ble_mesh_friend_fri (*C++ class*), 338
esp_ble_mesh_prov_cb_param_t::ble_mesh_friend_fri (*C++ member*), 339
esp_ble_mesh_prov_cb_param_t::ble_mesh_friend_fri

(C++ member), 339
esp_ble_mesh_prov_cb_param_t::ble_mesh_heartbeat_msg_recv_cb_param_t::ble_mesh_model_sub_
(C++ class), 339
esp_ble_mesh_prov_cb_param_t::ble_mesh_heartbeat_msg_recv_cb_param_t::feature_ble_mesh_model_unsu
(C++ member), 339
esp_ble_mesh_prov_cb_param_t::ble_mesh_heartbeat_msg_recv_cb_param_t::hops_ble_mesh_model_unsu
(C++ member), 339
esp_ble_mesh_prov_cb_param_t::ble_mesh_input_number_cb_param_t::ble_mesh_model_unsu
(C++ class), 339
esp_ble_mesh_prov_cb_param_t::ble_mesh_input_number_cb_param_t::addr_ble_mesh_model_unsu
(C++ member), 339
esp_ble_mesh_prov_cb_param_t::ble_mesh_input_number_cb_param_t::size_ble_mesh_model_unsu
(C++ member), 339
esp_ble_mesh_prov_cb_param_t::ble_mesh_input_number_cb_param_t::num_ble_mesh_model_unsu
(C++ class), 339
esp_ble_mesh_prov_cb_param_t::ble_mesh_input_number_cb_param_t::num_ble_mesh_node_add_l
(C++ member), 339
esp_ble_mesh_prov_cb_param_t::ble_mesh_input_string_cb_param_t::ble_mesh_node_add_l
(C++ class), 339
esp_ble_mesh_prov_cb_param_t::ble_mesh_input_string_cb_param_t::num_ble_mesh_node_add_l
(C++ member), 339
esp_ble_mesh_prov_cb_param_t::ble_mesh_link_close_cb_param_t::ble_mesh_node_add_l
(C++ class), 339
esp_ble_mesh_prov_cb_param_t::ble_mesh_link_close_cb_param_t::bearer_ble_mesh_node_add_l
(C++ member), 339
esp_ble_mesh_prov_cb_param_t::ble_mesh_link_open_cb_param_t::ble_mesh_node_add_l
(C++ class), 339
esp_ble_mesh_prov_cb_param_t::ble_mesh_link_open_cb_param_t::bearer_ble_mesh_node_add_l
(C++ member), 340
esp_ble_mesh_prov_cb_param_t::ble_mesh_node_bind_cb_param_t::ble_mesh_node_bind_
(C++ class), 340
esp_ble_mesh_prov_cb_param_t::ble_mesh_node_bind_cb_param_t::num_ble_mesh_node_bind_
(C++ member), 340
esp_ble_mesh_prov_cb_param_t::ble_mesh_node_reset_cb_param_t::ble_mesh_node_bind_
(C++ class), 340
esp_ble_mesh_prov_cb_param_t::ble_mesh_node_reset_cb_param_t::reason_ble_mesh_node_bind_
(C++ member), 340
esp_ble_mesh_prov_cb_param_t::ble_mesh_prov_complete_cb_param_t::ble_mesh_node_bind_
(C++ class), 340
esp_ble_mesh_prov_cb_param_t::ble_mesh_prov_complete_cb_param_t::addr_ble_mesh_node_bind_
(C++ member), 340
esp_ble_mesh_prov_cb_param_t::ble_mesh_prov_complete_cb_param_t::net_idx_ble_mesh_output_num
(C++ class), 340
esp_ble_mesh_prov_cb_param_t::ble_mesh_prov_complete_cb_param_t::num_items_ble_mesh_output_num
(C++ member), 340
esp_ble_mesh_prov_cb_param_t::ble_mesh_prov_enable_cb_param_t::ble_mesh_output_num
(C++ class), 340
esp_ble_mesh_prov_cb_param_t::ble_mesh_prov_enable_cb_param_t::oob_info_ble_mesh_output_str
(C++ member), 340
esp_ble_mesh_prov_cb_param_t::ble_mesh_publish_msg_cb_param_t::ble_mesh_output_str
(C++ class), 340
esp_ble_mesh_prov_cb_param_t::ble_mesh_publish_msg_cb_param_t::model_ble_mesh_provisioner_add
(C++ member), 340
esp_ble_mesh_prov_cb_param_t::ble_mesh_publish_msg_cb_param_t::opcode_ble_mesh_provisioner_disab
(C++ member), 340
esp_ble_mesh_prov_cb_param_t::ble_mesh_publish_msg_cb_param_t::state_ble_mesh_provisioner_disab
(C++ member), 340
esp_ble_mesh_prov_cb_param_t::ble_mesh_recv_unprov_adv_pkt_cb_param_t::ble_mesh_provisioner_enabl
(C++ member), 340
esp_ble_mesh_prov_cb_param_t::ble_mesh_recv_unprov_adv_pkt_cb_param_t::oob_info_ble_mesh_provisioner_enabl
(C++ member), 341
esp_ble_mesh_prov_cb_param_t::ble_mesh_set_heartbeat_msg_recv_cb_param_t::ble_mesh_model_sub_
(C++ class), 341
esp_ble_mesh_prov_cb_param_t::ble_mesh_set_heartbeat_msg_recv_cb_param_t::feature_ble_mesh_model_unsu
(C++ member), 341
esp_ble_mesh_prov_cb_param_t::ble_mesh_set_heartbeat_msg_recv_cb_param_t::hops_ble_mesh_model_unsu
(C++ member), 341
esp_ble_mesh_prov_cb_param_t::ble_mesh_set_unprov_dev_name_cb_param_t::ble_mesh_model_unsu
(C++ class), 341
esp_ble_mesh_prov_cb_param_t::ble_mesh_set_unprov_dev_name_cb_param_t::ble_mesh_model_unsu
(C++ member), 341
esp_ble_mesh_prov_cb_param_t::ble_mesh_set_unprov_dev_name_cb_param_t::size_ble_mesh_model_unsu
(C++ member), 341
esp_ble_mesh_prov_cb_param_t::ble_mesh_set_unprov_dev_name_cb_param_t::num_ble_mesh_model_unsu
(C++ class), 341
esp_ble_mesh_prov_cb_param_t::ble_mesh_set_unprov_dev_name_cb_param_t::num_ble_mesh_node_add_l
(C++ member), 341
esp_ble_mesh_prov_cb_param_t::ble_mesh_set_unprov_dev_name_cb_param_t::status_ble_mesh_node_add_l
(C++ class), 341
esp_ble_mesh_prov_cb_param_t::ble_mesh_set_unprov_dev_name_cb_param_t::status_ble_mesh_node_add_l
(C++ member), 341
esp_ble_mesh_prov_cb_param_t::ble_mesh_set_unprov_dev_name_cb_param_t::ble_mesh_node_add_l
(C++ class), 341
esp_ble_mesh_prov_cb_param_t::ble_mesh_set_unprov_dev_name_cb_param_t::bearer_ble_mesh_node_add_l
(C++ member), 341
esp_ble_mesh_prov_cb_param_t::ble_mesh_set_unprov_dev_name_cb_param_t::ble_mesh_node_add_l
(C++ class), 341
esp_ble_mesh_prov_cb_param_t::ble_mesh_set_unprov_dev_name_cb_param_t::ble_mesh_node_bind_
(C++ member), 341
esp_ble_mesh_prov_cb_param_t::ble_mesh_set_unprov_dev_name_cb_param_t::addr_ble_mesh_node_bind_
(C++ class), 341
esp_ble_mesh_prov_cb_param_t::ble_mesh_set_unprov_dev_name_cb_param_t::num_ble_mesh_node_bind_
(C++ member), 342
esp_ble_mesh_prov_cb_param_t::ble_mesh_set_unprov_dev_name_cb_param_t::ble_mesh_node_bind_
(C++ class), 342
esp_ble_mesh_prov_cb_param_t::ble_mesh_set_unprov_dev_name_cb_param_t::num_ble_mesh_node_bind_
(C++ member), 342
esp_ble_mesh_prov_cb_param_t::ble_mesh_set_unprov_dev_name_cb_param_t::ble_mesh_output_num
(C++ class), 342
esp_ble_mesh_prov_cb_param_t::ble_mesh_set_unprov_dev_name_cb_param_t::num_ble_mesh_output_num
(C++ member), 342
esp_ble_mesh_prov_cb_param_t::ble_mesh_set_unprov_dev_name_cb_param_t::ble_mesh_output_num
(C++ class), 342
esp_ble_mesh_prov_cb_param_t::ble_mesh_set_unprov_dev_name_cb_param_t::ble_mesh_output_str
(C++ member), 342
esp_ble_mesh_prov_cb_param_t::ble_mesh_set_unprov_dev_name_cb_param_t::ble_mesh_output_str
(C++ class), 342
esp_ble_mesh_prov_cb_param_t::ble_mesh_set_unprov_dev_name_cb_param_t::ble_mesh_provisioner_add
(C++ member), 342
esp_ble_mesh_prov_cb_param_t::ble_mesh_set_unprov_dev_name_cb_param_t::ble_mesh_provisioner_disab
(C++ class), 342
esp_ble_mesh_prov_cb_param_t::ble_mesh_set_unprov_dev_name_cb_param_t::ble_mesh_provisioner_disab
(C++ member), 342
esp_ble_mesh_prov_cb_param_t::ble_mesh_set_unprov_dev_name_cb_param_t::ble_mesh_provisioner_enabl
(C++ class), 342
esp_ble_mesh_prov_cb_param_t::ble_mesh_set_unprov_dev_name_cb_param_t::ble_mesh_provisioner_enabl

(C++ member), 342
esp_ble_mesh_prov_cb_param_t::ble_mesh_provision_enable_comp (C++ member), 344
esp_ble_mesh_prov_cb_param_t::ble_mesh_provision_enable_comp_t (C++ class), 342
esp_ble_mesh_prov_cb_param_t::ble_mesh_provision_enable_comp_t::err_code (C++ member), 343
esp_ble_mesh_prov_cb_param_t::ble_mesh_provision_enable_comp_t::err_code (C++ member), 344
esp_ble_mesh_prov_cb_param_t::ble_mesh_provision_set_complete_evt_param (C++ class), 343
esp_ble_mesh_prov_cb_param_t::ble_mesh_provision_set_complete_evt_param::addr (C++ member), 344
esp_ble_mesh_prov_cb_param_t::ble_mesh_provision_set_complete_evt_param::flags (C++ class), 344
esp_ble_mesh_prov_cb_param_t::ble_mesh_provision_set_complete_evt_param::iv_index (C++ member), 345
esp_ble_mesh_prov_cb_param_t::ble_mesh_provision_set_complete_evt_param::net_idx (C++ member), 345
esp_ble_mesh_prov_cb_param_t::ble_mesh_provision_set_complete_evt_param::net_key (C++ member), 345
esp_ble_mesh_prov_cb_param_t::ble_mesh_set_oob_pub_key_comp_param (C++ class), 345
esp_ble_mesh_prov_cb_param_t::ble_mesh_set_oob_pub_key_comp_param::pub_key_x (C++ member), 345
esp_ble_mesh_prov_cb_param_t::ble_mesh_set_oob_pub_key_comp_param::pub_key_x (C++ member), 345
esp_ble_mesh_prov_cb_param_t::ble_mesh_set_oob_pub_key_comp_param::pub_key_y (C++ member), 345
esp_ble_mesh_prov_cb_param_t::ble_mesh_set_oob_pub_key_comp_param::pub_key_y (C++ member), 345
esp_ble_mesh_prov_cb_param_t::ble_mesh_set_oob_pub_key_comp_param (C++ class), 345
esp_ble_mesh_prov_cb_param_t::ble_mesh_set_oob_pub_key_comp_param::pub_key_x (C++ member), 345
esp_ble_mesh_prov_cb_param_t::ble_mesh_set_oob_pub_key_comp_param::pub_key_x (C++ member), 345
esp_ble_mesh_prov_cb_param_t::ble_mesh_set_oob_pub_key_comp_param::pub_key_y (C++ member), 345
esp_ble_mesh_prov_cb_param_t::ble_mesh_set_oob_pub_key_comp_param::pub_key_y (C++ member), 345
esp_ble_mesh_prov_cb_param_t::ble_mesh_set_unprov_dev_name_comp_param (C++ class), 345
esp_ble_mesh_prov_cb_param_t::ble_mesh_set_unprov_dev_name_comp_param::err_code (C++ member), 345
esp_ble_mesh_prov_cb_param_t::ble_mesh_unprov_beacon_recv_param (C++ class), 344
esp_ble_mesh_prov_cb_param_t::ble_mesh_unprov_beacon_recv_param::oob_info (C++ member), 346
esp_ble_mesh_prov_cb_param_t::ble_mesh_unprov_beacon_recv_param::uri_hash (C++ member), 346
esp_ble_mesh_prov_cb_param_t::ble_mesh_unprov_beacon_recv_param::uri_hash_exist (C++ class), 346
esp_ble_mesh_prov_cb_param_t::ble_mesh_unprov_beacon_recv_param::uuid (C++ member), 346
esp_ble_mesh_prov_cb_param_t::ble_mesh_update_exceptional_list_comp_param (C++ class), 344
esp_ble_mesh_prov_cb_param_t::ble_mesh_update_exceptional_list_comp_param::err_code (C++ member), 346
esp_ble_mesh_prov_cb_param_t::ble_mesh_update_exceptional_list_comp_param::mesh_code (C++ class), 346
esp_ble_mesh_prov_cb_param_t::ble_mesh_update_exceptional_list_comp_param::update_with_addr_mesh_prov (C++ member), 346
esp_ble_mesh_prov_cb_param_t::ble_mesh_update_exceptional_list_comp_param::update_with_addr_mesh_prov (C++ class), 346
esp_ble_mesh_prov_cb_param_t::ble_mesh_update_exceptional_list_comp_param::update_with_addr_mesh_prov

(*C++ member*), 346
esp_ble_mesh_prov_cb_param_t::ble_mesh_[illegible]
(*C++ class*), 346
esp_ble_mesh_prov_cb_param_t::ble_mesh_[illegible]
(*C++ member*), 346
esp_ble_mesh_prov_cb_param_t::ble_mesh_[illegible]
(*C++ member*), 346
esp_ble_mesh_prov_cb_param_t::ble_mesh_[illegible]
(*C++ member*), 346
esp_ble_mesh_prov_cb_param_t::ble_mesh_[illegible]
(*C++ member*), 346
esp_ble_mesh_prov_cb_param_t::ble_mesh_[illegible]
(*C++ member*), 346
esp_ble_mesh_prov_cb_param_t::ble_mesh_[illegible]
(*C++ member*), 346
esp_ble_mesh_prov_cb_param_t::ble_mesh_[illegible]
(*C++ member*), 346
esp_ble_mesh_prov_cb_param_t::ble_mesh_[illegible]
(*C++ class*), 347
esp_ble_mesh_prov_cb_param_t::ble_mesh_[illegible]
(*C++ member*), 347
esp_ble_mesh_prov_cb_param_t::ble_mesh_[illegible]
(*C++ class*), 347
esp_ble_mesh_prov_cb_param_t::ble_mesh_[illegible]
(*C++ member*), 347
esp_ble_mesh_prov_cb_param_t::ble_mesh_[illegible]
(*C++ class*), 347
esp_ble_mesh_prov_cb_param_t::ble_mesh_[illegible]
(*C++ member*), 347
esp_ble_mesh_prov_cb_param_t::ble_mesh_[illegible]
(*C++ member*), 347
esp_ble_mesh_prov_cb_param_t::ble_mesh_[illegible]
(*C++ member*), 347
esp_ble_mesh_prov_cb_param_t::ble_mesh_[illegible]
(*C++ member*), 347
esp_ble_mesh_prov_cb_param_t::ble_mesh_[illegible]
(*C++ member*), 347
esp_ble_mesh_prov_cb_param_t::ble_mesh_[illegible]
(*C++ member*), 347
esp_ble_mesh_prov_cb_param_t::ble_mesh_[illegible]
(*C++ member*), 347
esp_ble_mesh_prov_cb_param_t::ble_mesh_[illegible]
(*C++ class*), 347
esp_ble_mesh_prov_cb_param_t::ble_mesh_[illegible]
(*C++ member*), 347
esp_ble_mesh_prov_cb_param_t::ble_mesh_[illegible]
(*C++ class*), 347
esp_ble_mesh_prov_cb_param_t::ble_mesh_[illegible]
(*C++ member*), 348
esp_ble_mesh_prov_cb_param_t::ble_mesh_[illegible]
(*C++ member*), 348
esp_ble_mesh_prov_cb_param_t::ble_mesh_[illegible]
(*C++ class*), 348
esp_ble_mesh_prov_cb_param_t::ble_mesh_[illegible]
(*C++ member*), 348
esp_ble_mesh_prov_cb_param_t::ble_mesh_[illegible]
(*C++ class*), 348
esp_ble_mesh_prov_cb_param_t::ble_mesh_[illegible]

(*C++ member*), 348
[illegible]
(*C++ class*), 348
[illegible]
(*C++ member*), 348
[illegible]
(*C++ class*), 348
[illegible]
(*C++ member*), 348
[illegible]
(*C++ member*), 348
[illegible]
(*C++ class*), 348
[illegible]
(*C++ member*), 348
[illegible]
(*C++ member*), 348
[illegible]
(*C++ member*), 348
[illegible]
(*C++ class*), 348
[illegible]
(*C++ member*), 349
[illegible]
(*C++ member*), 349
[illegible]
(*C++ class*), 349
[illegible]
(*C++ member*), 349
[illegible]
(*C++ member*), 349
[illegible]
(*C++ member*), 349
[illegible]
(*C++ class*), 349
[illegible]
(*C++ member*), 349
[illegible]
(*C++ member*), 349
[illegible]
(*C++ member*), 349
[illegible]
(*C++ member*), 349
[illegible]
(*C++ class*), 349
[illegible]
(*C++ member*), 349
[illegible]
(*C++ member*), 349
[illegible]
(*C++ member*), 349
[illegible]
(*C++ member*), 349
[illegible]
(*C++ class*), 349
[illegible]
(*C++ member*), 350
[illegible]

(C++ member), 350
(C++ class), 351
esp_ble_mesh_prov_cb_param_t::ble_mesh_proxy_gatt
(C++ class), 350
(C++ member), 351
esp_ble_mesh_prov_cb_param_t::ble_mesh_proxy_iden
(C++ member), 350
(C++ class), 351
esp_ble_mesh_prov_cb_param_t::ble_mesh_proxy_iden
(C++ member), 350
(C++ member), 351
esp_ble_mesh_prov_cb_param_t::ble_mesh_proxy_serv
(C++ member), 350
(C++ class), 351
esp_ble_mesh_prov_cb_param_t::ble_mesh_proxy_serv
(C++ member), 350
(C++ member), 352
esp_ble_mesh_prov_cb_param_t::ble_mesh_proxy_serv
(C++ member), 350
(C++ class), 352
esp_ble_mesh_prov_cb_param_t::ble_mesh_proxy_serv
(C++ class), 350
(C++ member), 352
esp_ble_mesh_prov_cb_param_t::ble_mesh_proxy_serv
(C++ member), 350
(C++ member), 352
esp_ble_mesh_prov_cb_param_t::ble_mesh_proxy_fast_p
(C++ member), 350
(C++ class), 352
esp_ble_mesh_prov_cb_param_t::ble_mesh_set_fast_p
(C++ member), 350
(C++ member), 352
esp_ble_mesh_prov_cb_param_t::ble_mesh_set_fast_p
(C++ member), 350
(C++ class), 352
esp_ble_mesh_prov_cb_param_t::ble_mesh_set_fast_p
(C++ member), 350
(C++ member), 352
esp_ble_mesh_prov_cb_param_t::ble_mesh_set_fast_p
(C++ class), 350
(C++ member), 352
esp_ble_mesh_prov_cb_param_t::ble_mesh_set_fast_p
(C++ member), 350
(C++ member), 352
esp_ble_mesh_prov_cb_param_t::ble_mesh_set_fast_p
(C++ member), 350
(C++ class), 352
esp_ble_mesh_prov_cb_param_t::ble_mesh_set_fast_p
(C++ member), 351
(C++ member), 352
esp_ble_mesh_prov_cb_param_t::ble_mesh_set_fast_p
(C++ member), 350
(C++ class), 352
esp_ble_mesh_prov_cb_param_t::ble_mesh_set_fast_p
(C++ member), 350
(C++ member), 353
esp_ble_mesh_prov_cb_param_t::ble_mesh_comp
(C++ class), 351
(C++ member), 338
esp_ble_mesh_prov_cb_param_t::ble_mesh_comp_param::conn_
(C++ member), 351
(C++ member), 335
esp_ble_mesh_prov_cb_param_t::ble_mesh_comp_param::err_c
(C++ member), 351
(C++ member), 335
esp_ble_mesh_prov_cb_param_t::ble_mesh_FRND_F
(C++ member), 351
(C++ enumerator), 338
esp_ble_mesh_prov_cb_param_t::ble_mesh_FRND_F
(C++ class), 351
(C++ enumerator), 338
esp_ble_mesh_prov_cb_param_t::ble_mesh_FRND_F
(C++ member), 351
(C++ enumerator), 338
esp_ble_mesh_prov_cb_param_t::ble_mesh_FRND_F
(C++ member), 351
(C++ enumerator), 338
esp_ble_mesh_prov_cb_param_t::ble_mesh_FRND_F
(C++ member), 351
(C++ enumerator), 338
esp_ble_mesh_prov_cb_param_t::ble_mesh_feature
(C++ class), 351
(C++ member), 336
esp_ble_mesh_prov_cb_param_t::ble_mesh_friendship_est
(C++ member), 351
(C++ member), 337
esp_ble_mesh_prov_cb_param_t::ble_mesh_frnd_friendship_ter

(C++ member), 337
esp_ble_mesh_prov_cb_param_t::hb_dst (C++ member), 336
esp_ble_mesh_prov_cb_param_t::hb_src (C++ member), 336
esp_ble_mesh_prov_cb_param_t::heartbeat_msg_recv (C++ member), 337
esp_ble_mesh_prov_cb_param_t::hops (C++ member), 336
esp_ble_mesh_prov_cb_param_t::index (C++ member), 336
esp_ble_mesh_prov_cb_param_t::init_ttl (C++ member), 336
esp_ble_mesh_prov_cb_param_t::lpn_disable_comp (C++ member), 337
esp_ble_mesh_prov_cb_param_t::lpn_enable_comp (C++ member), 337
esp_ble_mesh_prov_cb_param_t::lpn_friendship_establish (C++ member), 337
esp_ble_mesh_prov_cb_param_t::lpn_friendship_terminate (C++ member), 337
esp_ble_mesh_prov_cb_param_t::lpn_poll_comp (C++ member), 337
esp_ble_mesh_prov_cb_param_t::model_sub_add_comp (C++ member), 338
esp_ble_mesh_prov_cb_param_t::model_unsub_group_addr_comp (C++ member), 338
esp_ble_mesh_prov_cb_param_t::node_add_app_key_comp (C++ member), 334
esp_ble_mesh_prov_cb_param_t::node_add_net_key_comp (C++ member), 334
esp_ble_mesh_prov_cb_param_t::node_bind_app_key_to_model_comp (C++ member), 334
esp_ble_mesh_prov_cb_param_t::node_prov_complete (C++ member), 333
esp_ble_mesh_prov_cb_param_t::node_prov_disable_comp (C++ member), 333
esp_ble_mesh_prov_cb_param_t::node_prov_enable_comp (C++ member), 333
esp_ble_mesh_prov_cb_param_t::node_prov_input_num (C++ member), 333
esp_ble_mesh_prov_cb_param_t::node_prov_input_str (C++ member), 333
esp_ble_mesh_prov_cb_param_t::node_prov_link_close (C++ member), 333
esp_ble_mesh_prov_cb_param_t::node_prov_link_open (C++ member), 333
esp_ble_mesh_prov_cb_param_t::node_prov_output_num (C++ member), 333
esp_ble_mesh_prov_cb_param_t::node_prov_output_str (C++ member), 333
esp_ble_mesh_prov_cb_param_t::node_proxy_gatt_disable_comp (C++ member), 334
esp_ble_mesh_prov_cb_param_t::node_proxy_gatt_enable_comp (C++ member), 334
esp_ble_mesh_prov_cb_param_t::node_proxy_identity_enable_comp (C++ member), 334
esp_ble_mesh_prov_cb_param_t::node_set_unprov_dev_name_comp (C++ member), 333
esp_ble_mesh_prov_cb_param_t::op (C++ member), 336
esp_ble_mesh_prov_cb_param_t::prov_register_comp (C++ member), 333
esp_ble_mesh_prov_cb_param_t::provisioner_add_app_key_comp (C++ member), 335
esp_ble_mesh_prov_cb_param_t::provisioner_add_net_key_comp (C++ member), 335
esp_ble_mesh_prov_cb_param_t::provisioner_add_unprov_dev_comp (C++ member), 334
esp_ble_mesh_prov_cb_param_t::provisioner_bind_app_key_to_model_comp (C++ member), 335
esp_ble_mesh_prov_cb_param_t::provisioner_close_stream_comp (C++ member), 336
esp_ble_mesh_prov_cb_param_t::provisioner_close_stream_evt (C++ member), 336
esp_ble_mesh_prov_cb_param_t::provisioner_delete_dev_comp (C++ member), 334
esp_ble_mesh_prov_cb_param_t::provisioner_delete_node_with_addr_comp (C++ member), 335
esp_ble_mesh_prov_cb_param_t::provisioner_delete_node_with_uuid_comp (C++ member), 335
esp_ble_mesh_prov_cb_param_t::provisioner_delete_only_with_addr_comp (C++ member), 337
esp_ble_mesh_prov_cb_param_t::provisioner_delete_only_with_uuid_comp (C++ member), 337
esp_ble_mesh_prov_cb_param_t::provisioner_direct_close_comp (C++ member), 336
esp_ble_mesh_prov_cb_param_t::provisioner_enable_comp (C++ member), 335
esp_ble_mesh_prov_cb_param_t::provisioner_open_session_comp (C++ member), 336
esp_ble_mesh_prov_cb_param_t::provisioner_open_session_evt (C++ member), 336
esp_ble_mesh_prov_cb_param_t::provisioner_prov_complete (C++ member), 334
esp_ble_mesh_prov_cb_param_t::provisioner_prov_delete_comp (C++ member), 334
esp_ble_mesh_prov_cb_param_t::provisioner_prov_disable_comp (C++ member), 334
esp_ble_mesh_prov_cb_param_t::provisioner_prov_enable_comp (C++ member), 334
esp_ble_mesh_prov_cb_param_t::provisioner_prov_input_num (C++ member), 334
esp_ble_mesh_prov_cb_param_t::provisioner_prov_input_str (C++ member), 335
esp_ble_mesh_prov_cb_param_t::provisioner_prov_read_oob_pub_key_comp (C++ member), 334
esp_ble_mesh_prov_cb_param_t::provisioner_prov_set_node_name_comp (C++ member), 335
esp_ble_mesh_prov_cb_param_t::provisioner_prov_output_num (C++ member), 335
esp_ble_mesh_prov_cb_param_t::provisioner_prov_output_str (C++ member), 335
esp_ble_mesh_prov_cb_param_t::provisioner_recv_unprov_adv_pkt (C++ member), 334
esp_ble_mesh_prov_cb_param_t::provisioner_set_dev_uuid_match_comp (C++ member), 334
esp_ble_mesh_prov_cb_param_t::provisioner_set_node_name_comp (C++ member), 335
esp_ble_mesh_prov_cb_param_t::provisioner_set_prov_data_info_comp (C++ member), 334
esp_ble_mesh_prov_cb_param_t::provisioner_upd_net_key_comp (C++ member), 335

(C++ member), 334
esp_ble_mesh_prov_cb_param_t::provisioner_prov_read_oob_pub_key (C++ member), 334
esp_ble_mesh_prov_cb_param_t::provisioner_prov_read_oob_pub_key::oob_pub_key_x (C++ member), 334
esp_ble_mesh_prov_cb_param_t::provisioner_prov_read_oob_pub_key::oob_pub_key_y (C++ member), 335
esp_ble_mesh_prov_cb_param_t::provisioner_recv_unprov_adv_pkt (C++ member), 336
esp_ble_mesh_prov_cb_param_t::provisioner_recv_unprov_adv_pkt::addr (C++ member), 334
esp_ble_mesh_prov_cb_param_t::provisioner_set_dev_uuid_match::dev_uuid (C++ member), 335
esp_ble_mesh_prov_cb_param_t::provisioner_set_dev_uuid_match::len (C++ member), 336
esp_ble_mesh_prov_cb_param_t::provisioner_set_dev_uuid_match::offset (C++ member), 335
esp_ble_mesh_prov_cb_param_t::provisioner_set_node_name::index (C++ member), 335
esp_ble_mesh_prov_cb_param_t::provisioner_set_node_name::node_name (C++ member), 334
esp_ble_mesh_prov_cb_param_t::provisioner_store_node_comp_data::data (C++ member), 335
esp_ble_mesh_prov_cb_param_t::provisioner_store_node_comp_data::length (C++ member), 335
esp_ble_mesh_prov_cb_param_t::provisioner_store_node_comp_data::offset (C++ member), 335
esp_ble_mesh_prov_cb_param_t::provisioner_update_comp_data::data (C++ member), 335
esp_ble_mesh_prov_cb_param_t::provisioner_update_comp_data::length (C++ member), 335
esp_ble_mesh_prov_cb_param_t::provisioner_update_comp_data::offset (C++ member), 335
esp_ble_mesh_prov_cb_param_t::proxy_client_add_addr::addr (C++ member), 337
esp_ble_mesh_prov_cb_param_t::proxy_client_connected::conn_handle (C++ member), 337
esp_ble_mesh_prov_cb_param_t::proxy_client_connected::net_idx (C++ member), 337
esp_ble_mesh_prov_cb_param_t::proxy_client_disconnect::conn_handle (C++ member), 337
esp_ble_mesh_prov_cb_param_t::proxy_client_disconnect::net_idx (C++ member), 337
esp_ble_mesh_prov_cb_param_t::proxy_client_recv_filter_status::addr (C++ member), 337
esp_ble_mesh_prov_cb_param_t::proxy_client_recv_filter_status::conn_handle (C++ member), 337
esp_ble_mesh_prov_cb_param_t::proxy_client_recv_filter_status::net_idx (C++ member), 337
esp_ble_mesh_prov_cb_param_t::proxy_client_recv_filter_status::status (C++ member), 337
esp_ble_mesh_prov_cb_param_t::proxy_client_set_filter_type::conn_handle (C++ member), 337
esp_ble_mesh_prov_cb_param_t::proxy_client_set_filter_type::net_idx (C++ member), 337
esp_ble_mesh_prov_cb_param_t::proxy_client_set_filter_type::type (C++ member), 337
esp_ble_mesh_prov_cb_param_t::proxy_server_connected::conn_handle (C++ member), 337
esp_ble_mesh_prov_cb_param_t::proxy_server_connected::net_idx (C++ member), 337
esp_ble_mesh_prov_cb_param_t::proxy_server_disconnected::conn_handle (C++ member), 338
esp_ble_mesh_prov_cb_param_t::rssi (C++ member), 336
esp_ble_mesh_prov_cb_param_t::rx_ttl (C++ member), 336
esp_ble_mesh_prov_cb_param_t::set_fast_prov_action (C++ member), 337
esp_ble_mesh_prov_cb_param_t::set_fast_prov_info (C++ member), 337
esp_ble_mesh_prov_cb_param_t::type (C++ member), 335
esp_ble_mesh_prov_cb_param_t::uuid (C++ member), 336
esp_ble_mesh_prov_cb_param_t::[anonymous] (C++ enum), 338
esp_ble_mesh_prov_cb_t (C++ type), 401
esp_ble_mesh_prov_data_info_t (C++ class), 360
esp_ble_mesh_prov_data_info_t::flag (C++ member), 360
esp_ble_mesh_prov_data_info_t::flags (C++ member), 360
esp_ble_mesh_prov_data_info_t::iv_index (C++ member), 360
esp_ble_mesh_prov_data_info_t::net_idx (C++ member), 360
ESP_BLE_MESH_PROV_EVT_MAX (C++ enumerator), 385
ESP_BLE_MESH_PROV_GATT (C++ enumerator), 381
ESP_BLE_MESH_PROV_INPUT_OOB_MAX_LEN (C 宏), 366
ESP_BLE_MESH_PROV_OOB_2D_CODE (C++ enumerator), 381
ESP_BLE_MESH_PROV_OOB_BAR_CODE (C++ enumerator), 381
ESP_BLE_MESH_PROV_OOB_IN_BOX (C++ enumerator), 381
ESP_BLE_MESH_PROV_OOB_IN_MANUAL (C++ enumerator), 381
esp_ble_mesh_prov_oob_info_t (C++ enum), 381
ESP_BLE_MESH_PROV_OOB_NFC (C++ enumerator), 381
ESP_BLE_MESH_PROV_OOB_NUMBER (C++ enumerator), 381
ESP_BLE_MESH_PROV_OOB_ON_BOX (C++ enumerator), 381
ESP_BLE_MESH_PROV_OOB_ON_DEV (C++ enumerator), 381
ESP_BLE_MESH_PROV_OOB_ON_PAPER (C++ enumerator), 381
ESP_BLE_MESH_PROV_OOB_OTHER (C++ enumerator), 381
ESP_BLE_MESH_PROV_OOB_STRING (C++ enumerator), 381
ESP_BLE_MESH_PROV_OOB_URI (C++ enumerator), 381
ESP_BLE_MESH_PROV_OUTPUT_OOB_MAX_LEN (C 宏), 366
ESP_BLE_MESH_PROV_REGISTER_COMP_EVT (C++ enumerator), 381
ESP_BLE_MESH_PROV_STATIC_OOB_MAX_LEN (C 宏), 366

esp_ble_mesh_prov_t (*C++ class*), 359
esp_ble_mesh_provisioner_add_local_app_key
(*C++ function*), 393
ESP_BLE_MESH_PROVISIONER_ADD_LOCAL_APP_KEY_COMP_EVT
(*C++ enumerator*), 383
esp_ble_mesh_provisioner_add_local_net_key
(*C++ function*), 394
ESP_BLE_MESH_PROVISIONER_ADD_LOCAL_NET_KEY_COMP_EVT
(*C++ enumerator*), 383
esp_ble_mesh_provisioner_add_unprov_dev
(*C++ function*), 399
ESP_BLE_MESH_PROVISIONER_ADD_UNPROV_DEV_COMP_EVT
(*C++ enumerator*), 383
esp_ble_mesh_provisioner_bind_app_key_to_local_model
(*C++ function*), 394
ESP_BLE_MESH_PROVISIONER_BIND_APP_KEY_TO_MODEL_COMP_EVT
(*C++ enumerator*), 383
esp_ble_mesh_provisioner_close_settings_with_index
(*C++ function*), 395
ESP_BLE_MESH_PROVISIONER_CLOSE_SETTINGS_WITH_INDEX_COMP_EVT
(*C++ enumerator*), 384
esp_ble_mesh_provisioner_close_settings_with_uid
(*C++ function*), 396
ESP_BLE_MESH_PROVISIONER_CLOSE_SETTINGS_WITH_UID_COMP_EVT
(*C++ enumerator*), 384
esp_ble_mesh_provisioner_delete_dev
(*C++ function*), 400
ESP_BLE_MESH_PROVISIONER_DELETE_DEV_COMP_EVT
(*C++ enumerator*), 383
esp_ble_mesh_provisioner_delete_node_with_addr
(*C++ function*), 393
ESP_BLE_MESH_PROVISIONER_DELETE_NODE_WITH_ADDR_COMP_EVT
(*C++ enumerator*), 384
esp_ble_mesh_provisioner_delete_node_with_uuid
(*C++ function*), 393
ESP_BLE_MESH_PROVISIONER_DELETE_NODE_WITH_UUID_COMP_EVT
(*C++ enumerator*), 384
esp_ble_mesh_provisioner_delete_settings_with_index
(*C++ function*), 396
ESP_BLE_MESH_PROVISIONER_DELETE_SETTINGS_WITH_INDEX_COMP_EVT
(*C++ enumerator*), 384
esp_ble_mesh_provisioner_delete_settings_with_uid
(*C++ function*), 396
ESP_BLE_MESH_PROVISIONER_DELETE_SETTINGS_WITH_UID_COMP_EVT
(*C++ enumerator*), 384
esp_ble_mesh_provisioner_direct_erase_settings
(*C++ function*), 395
ESP_BLE_MESH_PROVISIONER_DRIECT_ERASE_SETTINGS_COMP_EVT
(*C++ enumerator*), 384
ESP_BLE_MESH_PROVISIONER_ENABLE_HEARTBEAT_RECV_COMP_EVT
(*C++ enumerator*), 384
esp_ble_mesh_provisioner_get_free_settings_index
(*C++ function*), 396
esp_ble_mesh_provisioner_get_local_app_key
(*C++ function*), 393
esp_ble_mesh_provisioner_get_local_net_key
(*C++ function*), 394
esp_ble_mesh_provisioner_get_node_index
(*C++ function*), 392
esp_ble_mesh_provisioner_get_node_name
(*C++ function*), 392
esp_ble_mesh_provisioner_get_node_table_entry
(*C++ function*), 393
esp_ble_mesh_provisioner_get_node_with_addr
(*C++ function*), 392
esp_ble_mesh_provisioner_get_node_with_name
(*C++ function*), 392
esp_ble_mesh_provisioner_get_node_with_uuid
(*C++ function*), 392
esp_ble_mesh_provisioner_get_prov_node_count
(*C++ function*), 393
esp_ble_mesh_provisioner_get_settings_index
(*C++ function*), 396
esp_ble_mesh_provisioner_get_settings_uid
(*C++ function*), 396
esp_ble_mesh_provisioner_input_number
(*C++ function*), 398
esp_ble_mesh_provisioner_input_string
(*C++ function*), 398
esp_ble_mesh_provisioner_open_settings_with_index
(*C++ function*), 395
ESP_BLE_MESH_PROVISIONER_OPEN_SETTINGS_WITH_INDEX_COMP_EVT
(*C++ enumerator*), 384
esp_ble_mesh_provisioner_open_settings_with_uid
(*C++ function*), 395
ESP_BLE_MESH_PROVISIONER_OPEN_SETTINGS_WITH_UID_COMP_EVT
(*C++ enumerator*), 384
ESP_BLE_MESH_PROVISIONER_PROV_COMPLETE_EVT
(*C++ enumerator*), 383
ESP_BLE_MESH_PROVISIONER_PROV_DEV_WITH_ADDR_COMP_EVT
(*C++ enumerator*), 383
esp_ble_mesh_provisioner_prov_device_with_addr
(*C++ function*), 399
esp_ble_mesh_provisioner_prov_disable
(*C++ function*), 399
ESP_BLE_MESH_PROVISIONER_PROV_DISABLE_COMP_EVT
(*C++ enumerator*), 382
esp_ble_mesh_provisioner_prov_enable
(*C++ function*), 398
ESP_BLE_MESH_PROVISIONER_PROV_ENABLE_COMP_EVT
(*C++ enumerator*), 382
ESP_BLE_MESH_PROVISIONER_PROV_INPUT_EVT
(*C++ enumerator*), 383
ESP_BLE_MESH_PROVISIONER_PROV_INPUT_NUMBER_COMP_EVT
(*C++ enumerator*), 383
ESP_BLE_MESH_PROVISIONER_PROV_INPUT_STRING_COMP_EVT
(*C++ enumerator*), 383
ESP_BLE_MESH_PROVISIONER_PROV_LINK_CLOSE_EVT
(*C++ enumerator*), 383
ESP_BLE_MESH_PROVISIONER_PROV_LINK_OPEN_EVT
(*C++ enumerator*), 383
ESP_BLE_MESH_PROVISIONER_PROV_OUTPUT_EVT
(*C++ enumerator*), 383
ESP_BLE_MESH_PROVISIONER_PROV_READ_OOB_PUB_KEY_COMP_EVT
(*C++ enumerator*), 383
ESP_BLE_MESH_PROVISIONER_PROV_READ_OOB_PUB_KEY_EVT

(C++ enumerator), 383
esp_ble_mesh_provisioner_read_oob_pub_key (C++ function), 398
esp_ble_mesh_provisioner_recv_heartbeat (C++ function), 394
ESP_BLE_MESH_PROVISIONER_RECV_HEARTBEAT_MESSAGE_EVT (C++ enumerator), 384
ESP_BLE_MESH_PROVISIONER_RECV_UNPROV_ADV_PKT_EVT (C++ enumerator), 382
esp_ble_mesh_provisioner_set_dev_uuid_match (C++ function), 400
ESP_BLE_MESH_PROVISIONER_SET_DEV_UUID_MATCH_COMP_EVT (C++ enumerator), 383
esp_ble_mesh_provisioner_set_heartbeat_filter (C++ function), 395
ESP_BLE_MESH_PROVISIONER_SET_HEARTBEAT_FILTER_INFO_COMP_EVT (C++ enumerator), 384
esp_ble_mesh_provisioner_set_heartbeat_filter_type (C++ function), 394
ESP_BLE_MESH_PROVISIONER_SET_HEARTBEAT_FILTER_TYPE_COMP_EVT (C++ enumerator), 384
esp_ble_mesh_provisioner_set_node_name (C++ function), 392
ESP_BLE_MESH_PROVISIONER_SET_NODE_NAME_COMP_EVT (C++ enumerator), 383
esp_ble_mesh_provisioner_set_primary_elem_addr (C++ function), 401
ESP_BLE_MESH_PROVISIONER_SET_PRIMARY_ELEM_ADDR_COMP_EVT (C++ enumerator), 383
esp_ble_mesh_provisioner_set_prov_data_info (C++ function), 400
ESP_BLE_MESH_PROVISIONER_SET_PROV_DATA_INFO_COMP_EVT (C++ enumerator), 383
esp_ble_mesh_provisioner_set_static_oob_value (C++ function), 400
ESP_BLE_MESH_PROVISIONER_SET_STATIC_OOB_VALUE_COMP_EVT (C++ enumerator), 383
esp_ble_mesh_provisioner_store_node_comp_data (C++ function), 392
ESP_BLE_MESH_PROVISIONER_STORE_NODE_COMP_DATA_COMP_EVT (C++ enumerator), 383
esp_ble_mesh_provisioner_update_local_app_key (C++ function), 393
ESP_BLE_MESH_PROVISIONER_UPDATE_LOCAL_APP_KEY_COMP_EVT (C++ enumerator), 383
esp_ble_mesh_provisioner_update_local_net_key (C++ function), 394
ESP_BLE_MESH_PROVISIONER_UPDATE_LOCAL_NET_KEY_COMP_EVT (C++ enumerator), 383
esp_ble_mesh_proxy_client_add_filter_addr (C++ function), 402
ESP_BLE_MESH_PROXY_CLIENT_ADD_FILTER_ADDR_COMP_EVT (C++ enumerator), 385
esp_ble_mesh_proxy_client_connect (C++ function), 402
ESP_BLE_MESH_PROXY_CLIENT_CONNECT_COMP_EVT (C++ enumerator), 385
ESP_BLE_MESH_PROXY_CLIENT_CONNECTED_EVT (C++ enumerator), 385
esp_ble_mesh_proxy_client_disconnect (C++ function), 402
ESP_BLE_MESH_PROXY_CLIENT_DISCONNECT_COMP_EVT (C++ enumerator), 385
ESP_BLE_MESH_PROXY_CLIENT_DISCONNECTED_EVT (C++ enumerator), 385
ESP_BLE_MESH_PROXY_CLIENT_RECV_ADV_PKT_EVT (C++ enumerator), 385
ESP_BLE_MESH_PROXY_CLIENT_RECV_FILTER_STATUS_EVT (C++ enumerator), 385
esp_ble_mesh_proxy_client_remove_filter_addr (C++ function), 403
ESP_BLE_MESH_PROXY_CLIENT_REMOVE_FILTER_ADDR_COMP_EVT (C++ enumerator), 385
esp_ble_mesh_proxy_client_set_filter_type (C++ function), 402
ESP_BLE_MESH_PROXY_CLIENT_SET_FILTER_TYPE_COMP_EVT (C++ enumerator), 385
esp_ble_mesh_proxy_filter_type_t (C++ enum), 381
esp_ble_mesh_proxy_gatt_disable (C++ function), 402
esp_ble_mesh_proxy_gatt_enable (C++ function), 402
esp_ble_mesh_proxy_identity_enable (C++ function), 402
ESP_BLE_MESH_PROXY_SERVER_CONNECTED_EVT (C++ enumerator), 385
ESP_BLE_MESH_PROXY_SERVER_DISCONNECTED_EVT (C++ enumerator), 385
ESP_BLE_MESH_PUBLISH_TRANSMIT (C 宏), 366
ESP_BLE_MESH_PUSH (C++ enumerator), 381
esp_ble_mesh_register_config_client_callback (C++ function), 403
esp_ble_mesh_register_config_server_callback (C++ function), 403
esp_ble_mesh_register_custom_model_callback (C++ function), 390
esp_ble_mesh_register_generic_client_callback (C++ function), 435
esp_ble_mesh_register_generic_server_callback (C++ function), 436
esp_ble_mesh_register_health_client_callback (C++ function), 427
esp_ble_mesh_register_health_server_callback (C++ function), 427
esp_ble_mesh_register_light_client_callback (C++ function), 503
esp_ble_mesh_register_lighting_server_callback (C++ function), 503
esp_ble_mesh_register_prov_callback (C++ function), 397
esp_ble_mesh_register_sensor_client_callback (C++ function), 466
esp_ble_mesh_register_sensor_server_callback (C++ function), 466
esp_ble_mesh_register_time_scene_client_callback

(C++ function), 481
esp_ble_mesh_register_time_scene_server_callbacks (C++ function), 482
ESP_BLE_MESH_RELAY_DISABLED (C 宏), 365
ESP_BLE_MESH_RELAY_ENABLED (C 宏), 365
ESP_BLE_MESH_RELAY_NOT_SUPPORTED (C 宏), 365
ESP_BLE_MESH_SAMPLE_FUNC_ACCUMULATED (C++ enumerator), 481
ESP_BLE_MESH_SAMPLE_FUNC_ARITHMETIC_MEAN (C++ enumerator), 481
ESP_BLE_MESH_SAMPLE_FUNC_COUNT (C++ enumerator), 481
ESP_BLE_MESH_SAMPLE_FUNC_INSTANTANEOUS (C++ enumerator), 481
ESP_BLE_MESH_SAMPLE_FUNC_MAXIMUM (C++ enumerator), 481
ESP_BLE_MESH_SAMPLE_FUNC_MINIMUM (C++ enumerator), 481
ESP_BLE_MESH_SAMPLE_FUNC_RMS (C++ enumerator), 481
ESP_BLE_MESH_SAMPLE_FUNC_UNSPECIFIED (C++ enumerator), 481
esp_ble_mesh_scene_delete_t (C++ class), 486
esp_ble_mesh_scene_delete_t::scene_number (C++ member), 486
ESP_BLE_MESH_SCENE_NOT_FOUND (C 宏), 502
ESP_BLE_MESH_SCENE_NUMBER_LEN (C 宏), 500
esp_ble_mesh_scene_recall_t (C++ class), 486
esp_ble_mesh_scene_recall_t::delay (C++ member), 486
esp_ble_mesh_scene_recall_t::op_en (C++ member), 486
esp_ble_mesh_scene_recall_t::scene_number (C++ member), 486
esp_ble_mesh_scene_recall_t::tid (C++ member), 486
esp_ble_mesh_scene_recall_t::trans_time (C++ member), 486
ESP_BLE_MESH_SCENE_REG_FULL (C 宏), 501
esp_ble_mesh_scene_register_status_cb_t (C++ class), 488
esp_ble_mesh_scene_register_status_cb_t::current_scene (C++ member), 488
esp_ble_mesh_scene_register_status_cb_t::scenes (C++ member), 488
esp_ble_mesh_scene_register_status_cb_t::status_code (C++ member), 488
esp_ble_mesh_scene_register_t (C++ class), 490
esp_ble_mesh_scene_register_t::scene_number (C++ member), 491
esp_ble_mesh_scene_register_t::scene_type (C++ member), 491
esp_ble_mesh_scene_register_t::scene_value (C++ member), 491
esp_ble_mesh_scene_setup_srv_t (C++ class), 492
esp_ble_mesh_scene_setup_srv_t::model (C++ member), 492
esp_ble_mesh_scene_setup_srv_t::rsp_ctrl (C++ member), 492
esp_ble_mesh_scene_setup_srv_t::state (C++ member), 492
esp_ble_mesh_scene_srv_t (C++ class), 492
esp_ble_mesh_scene_srv_t::last (C++ member), 492
esp_ble_mesh_scene_srv_t::model (C++ member), 492
esp_ble_mesh_scene_srv_t::rsp_ctrl (C++ member), 492
esp_ble_mesh_scene_srv_t::state (C++ member), 492
esp_ble_mesh_scene_srv_t::transition (C++ member), 492
esp_ble_mesh_scene_status_cb_t (C++ class), 488
esp_ble_mesh_scene_status_cb_t::current_scene (C++ member), 488
esp_ble_mesh_scene_status_cb_t::op_en (C++ member), 488
esp_ble_mesh_scene_status_cb_t::remain_time (C++ member), 488
esp_ble_mesh_scene_status_cb_t::status_code (C++ member), 488
esp_ble_mesh_scene_status_cb_t::target_scene (C++ member), 488
esp_ble_mesh_scene_store_t (C++ class), 485
esp_ble_mesh_scene_store_t::scene_number (C++ member), 486
ESP_BLE_MESH_SCENE_SUCCESS (C 宏), 501
esp_ble_mesh_scenes_state_t (C++ class), 491
esp_ble_mesh_scenes_state_t::current_scene (C++ member), 491
esp_ble_mesh_scenes_state_t::in_progress (C++ member), 492
esp_ble_mesh_scenes_state_t::scene_count (C++ member), 491
esp_ble_mesh_scenes_state_t::scenes (C++ member), 491
esp_ble_mesh_scenes_state_t::status_code (C++ member), 492
esp_ble_mesh_scenes_state_t::target_scene (C++ member), 491
ESP_BLE_MESH_SCHEDULE_ACT_NO_ACTION (C 宏), 501
ESP_BLE_MESH_SCHEDULE_ACT_SCENE_RECALL (C 宏), 501
ESP_BLE_MESH_SCHEDULE_ACT_TURN_OFF (C 宏), 501
ESP_BLE_MESH_SCHEDULE_ACT_TURN_ON (C 宏), 501

ESP_BLE_MESH_SCHEDULE_DAY_ANY_DAY (C 宏), 501
ESP_BLE_MESH_SCHEDULE_ENTRY_MAX_INDEX (C 宏), 501
ESP_BLE_MESH_SCHEDULE_HOUR_ANY_HOUR (C 宏), 501
ESP_BLE_MESH_SCHEDULE_HOUR_ONCE_A_DAY (C 宏), 501
esp_ble_mesh_schedule_register_t (C++ class), 492
esp_ble_mesh_schedule_register_t::action (C++ member), 493
esp_ble_mesh_schedule_register_t::day (C++ member), 492
esp_ble_mesh_schedule_register_t::day_of_week (C++ member), 493
esp_ble_mesh_schedule_register_t::hour (C++ member), 492
esp_ble_mesh_schedule_register_t::in_use (C++ member), 492
esp_ble_mesh_schedule_register_t::minute (C++ member), 492
esp_ble_mesh_schedule_register_t::month (C++ member), 492
esp_ble_mesh_schedule_register_t::scene_number (C++ member), 493
esp_ble_mesh_schedule_register_t::second (C++ member), 493
esp_ble_mesh_schedule_register_t::trans_time (C++ member), 493
esp_ble_mesh_schedule_register_t::year (C++ member), 492
ESP_BLE_MESH_SCHEDULE_SCENE_NO_SCENE (C 宏), 501
ESP_BLE_MESH_SCHEDULE_SEC_ANY_OF_HOUR (C 宏), 501
ESP_BLE_MESH_SCHEDULE_SEC_ANY_OF_MIN (C 宏), 501
ESP_BLE_MESH_SCHEDULE_SEC_EVERY_15_MIN (C 宏), 501
ESP_BLE_MESH_SCHEDULE_SEC_EVERY_15_SEC (C 宏), 501
ESP_BLE_MESH_SCHEDULE_SEC_EVERY_20_MIN (C 宏), 501
ESP_BLE_MESH_SCHEDULE_SEC_EVERY_20_SEC (C 宏), 501
ESP_BLE_MESH_SCHEDULE_SEC_ONCE_AN_HOUR (C 宏), 501
ESP_BLE_MESH_SCHEDULE_SEC_ONCE_AN_MIN (C 宏), 501
ESP_BLE_MESH_SCHEDULE_YEAR_ANY_YEAR (C 宏), 501
esp_ble_mesh_scheduler_act_get_t (C++ class), 486
esp_ble_mesh_scheduler_act_get_t::index (C++ member), 486
esp_ble_mesh_scheduler_act_set_t (C++ class), 486
esp_ble_mesh_scheduler_act_set_t::action (C++ member), 487
esp_ble_mesh_scheduler_act_set_t::day (C++ member), 486
esp_ble_mesh_scheduler_act_set_t::day_of_week (C++ member), 487
esp_ble_mesh_scheduler_act_set_t::hour (C++ member), 486
esp_ble_mesh_scheduler_act_set_t::index (C++ member), 486
esp_ble_mesh_scheduler_act_set_t::minute (C++ member), 486
esp_ble_mesh_scheduler_act_set_t::month (C++ member), 486
esp_ble_mesh_scheduler_act_set_t::scene_number (C++ member), 487
esp_ble_mesh_scheduler_act_set_t::second (C++ member), 487
esp_ble_mesh_scheduler_act_set_t::trans_time (C++ member), 487
esp_ble_mesh_scheduler_act_set_t::year (C++ member), 486
esp_ble_mesh_scheduler_act_status_cb_t (C++ class), 488
esp_ble_mesh_scheduler_act_status_cb_t::action (C++ member), 489
esp_ble_mesh_scheduler_act_status_cb_t::day (C++ member), 489
esp_ble_mesh_scheduler_act_status_cb_t::day_of_we (C++ member), 489
esp_ble_mesh_scheduler_act_status_cb_t::hour (C++ member), 489
esp_ble_mesh_scheduler_act_status_cb_t::index (C++ member), 489
esp_ble_mesh_scheduler_act_status_cb_t::minute (C++ member), 489
esp_ble_mesh_scheduler_act_status_cb_t::month (C++ member), 489
esp_ble_mesh_scheduler_act_status_cb_t::scene_num (C++ member), 489
esp_ble_mesh_scheduler_act_status_cb_t::second (C++ member), 489
esp_ble_mesh_scheduler_act_status_cb_t::trans_tim (C++ member), 489
esp_ble_mesh_scheduler_act_status_cb_t::year (C++ member), 489
esp_ble_mesh_scheduler_setup_srv_t (C++ class), 493
esp_ble_mesh_scheduler_setup_srv_t::model (C++ member), 493
esp_ble_mesh_scheduler_setup_srv_t::rsp_ctrl (C++ member), 493
esp_ble_mesh_scheduler_setup_srv_t::state (C++ member), 493
esp_ble_mesh_scheduler_srv_t (C++ class), 493
esp_ble_mesh_scheduler_srv_t::model (C++ member), 493

esp_ble_mesh_scheduler_srv_t::rsp_ctrl (C++ member), 493
esp_ble_mesh_scheduler_srv_t::state (C++ member), 493
esp_ble_mesh_scheduler_state_t (C++ class), 493
esp_ble_mesh_scheduler_state_t::schedules (C++ member), 493
esp_ble_mesh_scheduler_state_t::schedules (C++ member), 493
esp_ble_mesh_scheduler_status_cb_t (C++ class), 488
esp_ble_mesh_scheduler_status_cb_t::schedules (C++ member), 488
ESP_BLE_MESH_SDU_MAX_LEN (C 宏), 364
ESP_BLE_MESH_SELF_TEST_ERROR (C 宏), 434
ESP_BLE_MESH_SELF_TEST_WARNING (C 宏), 434
esp_ble_mesh_sensor_cadence_get_t (C++ class), 469
esp_ble_mesh_sensor_cadence_get_t::property_id (C++ member), 469
esp_ble_mesh_sensor_cadence_set_t (C++ class), 469
esp_ble_mesh_sensor_cadence_set_t::fast_cadence_high (C++ member), 469
esp_ble_mesh_sensor_cadence_set_t::fast_cadence_low (C++ member), 469
esp_ble_mesh_sensor_cadence_set_t::fast_cadence_period_divisor (C++ member), 469
esp_ble_mesh_sensor_cadence_set_t::property_id (C++ member), 469
esp_ble_mesh_sensor_cadence_set_t::status_cadence (C++ member), 469
esp_ble_mesh_sensor_cadence_set_t::status_trigger_delta_down (C++ member), 469
esp_ble_mesh_sensor_cadence_set_t::status_trigger_delta_up (C++ member), 469
esp_ble_mesh_sensor_cadence_set_t::status_trigger_type (C++ member), 469
esp_ble_mesh_sensor_cadence_status_cb_t (C++ class), 471
esp_ble_mesh_sensor_cadence_status_cb_t::property_id (C++ member), 471
esp_ble_mesh_sensor_cadence_status_cb_t::sensor_cadence_value (C++ member), 471
esp_ble_mesh_sensor_cadence_t (C++ class), 473
esp_ble_mesh_sensor_cadence_t::fast_cadence_high (C++ member), 473
esp_ble_mesh_sensor_cadence_t::fast_cadence_low (C++ member), 473
esp_ble_mesh_sensor_cadence_t::min_interval (C++ member), 473
esp_ble_mesh_sensor_cadence_t::period_divisor (C++ member), 473
esp_ble_mesh_sensor_cadence_t::trigger_delta_down (C++ member), 473
esp_ble_mesh_sensor_cadence_t::trigger_delta_up (C++ member), 473
esp_ble_mesh_sensor_cadence_t::trigger_type (C++ member), 473
esp_ble_mesh_sensor_client_cb_event_t (C++ enum), 480
esp_ble_mesh_sensor_client_cb_param_t (C++ class), 472
esp_ble_mesh_sensor_client_cb_param_t::error_code (C++ member), 472
esp_ble_mesh_sensor_client_cb_param_t::params (C++ member), 472
esp_ble_mesh_sensor_client_cb_param_t::status_cb (C++ member), 472
esp_ble_mesh_sensor_client_cb_t (C++ type), 480
ESP_BLE_MESH_SENSOR_CLIENT_EVT_MAX (C++ enumerator), 480
esp_ble_mesh_sensor_client_get_state (C++ function), 466
ESP_BLE_MESH_SENSOR_CLIENT_GET_STATE_EVT (C++ enumerator), 480
esp_ble_mesh_sensor_client_get_state_t (C++ union), 467
esp_ble_mesh_sensor_client_get_state_t::cadence_get (C++ member), 467
esp_ble_mesh_sensor_client_get_state_t::column_get (C++ member), 467
esp_ble_mesh_sensor_client_get_state_t::descriptor_get (C++ member), 467
esp_ble_mesh_sensor_client_get_state_t::sensor_get (C++ member), 467
esp_ble_mesh_sensor_client_get_state_t::series_get (C++ member), 467
esp_ble_mesh_sensor_client_get_state_t::setting_get (C++ member), 467
esp_ble_mesh_sensor_client_get_state_t::settings_get (C++ member), 467
ESP_BLE_MESH_SENSOR_CLIENT_PUBLISH_EVT (C++ enumerator), 480
esp_ble_mesh_sensor_client_set_state (C++ function), 466
ESP_BLE_MESH_SENSOR_CLIENT_SET_STATE_EVT (C++ enumerator), 480
esp_ble_mesh_sensor_client_set_state_t (C++ union), 467
esp_ble_mesh_sensor_client_set_state_t::cadence_set (C++ member), 467
esp_ble_mesh_sensor_client_set_state_t::setting_set (C++ member), 467
esp_ble_mesh_sensor_client_status_cb_t (C++ union), 467
esp_ble_mesh_sensor_client_status_cb_t::cadence_status (C++ member), 467
esp_ble_mesh_sensor_client_status_cb_t::column_status (C++ member), 468
esp_ble_mesh_sensor_client_status_cb_t::descriptor_status (C++ member), 467

esp_ble_mesh_sensor_client_status_cb_t::sensor_status (C++ member), 468
esp_ble_mesh_sensor_client_status_cb_t::series_status (C++ member), 468
esp_ble_mesh_sensor_client_status_cb_t::setting_status (C++ member), 467
esp_ble_mesh_sensor_client_status_cb_t::setting_status (C++ member), 467
ESP_BLE_MESH_SENSOR_CLIENT_TIMEOUT_EVT (C++ enumerator), 480
esp_ble_mesh_sensor_column_get_t (C++ class), 470
esp_ble_mesh_sensor_column_get_t::property_id (C++ member), 470
esp_ble_mesh_sensor_column_get_t::raw_value_x (C++ member), 470
esp_ble_mesh_sensor_column_status_cb_t (C++ class), 472
esp_ble_mesh_sensor_column_status_cb_t::property_id (C++ member), 472
esp_ble_mesh_sensor_column_status_cb_t::sensor_data (C++ member), 472
ESP_BLE_MESH_SENSOR_DATA_FORMAT_A (C 宏), 479
ESP_BLE_MESH_SENSOR_DATA_FORMAT_A_MPID (C 宏), 479
ESP_BLE_MESH_SENSOR_DATA_FORMAT_A_MPID_LEN (C 宏), 479
ESP_BLE_MESH_SENSOR_DATA_FORMAT_B (C 宏), 479
ESP_BLE_MESH_SENSOR_DATA_FORMAT_B_MPID (C 宏), 480
ESP_BLE_MESH_SENSOR_DATA_FORMAT_B_MPID_LEN (C 宏), 479
esp_ble_mesh_sensor_data_t (C++ class), 473
esp_ble_mesh_sensor_data_t::format (C++ member), 473
esp_ble_mesh_sensor_data_t::length (C++ member), 474
esp_ble_mesh_sensor_data_t::raw_value (C++ member), 474
ESP_BLE_MESH_SENSOR_DATA_ZERO_LEN (C 宏), 479
esp_ble_mesh_sensor_descriptor_get_t (C++ class), 469
esp_ble_mesh_sensor_descriptor_get_t::op_en (C++ member), 469
esp_ble_mesh_sensor_descriptor_get_t::property_id (C++ member), 469
ESP_BLE_MESH_SENSOR_DESCRIPTOR_LEN (C 宏), 478
esp_ble_mesh_sensor_descriptor_status_cb_t (C++ class), 471
esp_ble_mesh_sensor_descriptor_status_cb_t::descriptor (C++ member), 471
esp_ble_mesh_sensor_descriptor_t (C++ class), 472
esp_ble_mesh_sensor_descriptor_t::measure_period (C++ member), 473
esp_ble_mesh_sensor_descriptor_t::negative_tolera (C++ member), 472
esp_ble_mesh_sensor_descriptor_t::positive_tolera (C++ member), 472
esp_ble_mesh_sensor_descriptor_t::sampling_functi (C++ member), 473
esp_ble_mesh_sensor_descriptor_t::update_interval (C++ member), 473
ESP_BLE_MESH_SENSOR_DIVISOR_TRIGGER_TYPE_LEN (C 宏), 479
esp_ble_mesh_sensor_get_t (C++ class), 470
esp_ble_mesh_sensor_get_t::op_en (C++ member), 470
esp_ble_mesh_sensor_get_t::property_id (C++ member), 470
esp_ble_mesh_sensor_message_opcode_t (C++ type), 379
ESP_BLE_MESH_SENSOR_NOT_APPL_MEASURE_PERIOD (C 宏), 478
ESP_BLE_MESH_SENSOR_NOT_APPL_UPDATE_INTERVAL (C 宏), 478
ESP_BLE_MESH_SENSOR_PERIOD_DIVISOR_MAX_VALUE (C 宏), 479
ESP_BLE_MESH_SENSOR_PROPERTY_ID_LEN (C 宏), 478
esp_ble_mesh_sensor_sample_func (C++ enum), 481
esp_ble_mesh_sensor_series_column_t (C++ class), 474
esp_ble_mesh_sensor_series_column_t::column_width (C++ member), 474
esp_ble_mesh_sensor_series_column_t::raw_value_x (C++ member), 474
esp_ble_mesh_sensor_series_column_t::raw_value_y (C++ member), 474
esp_ble_mesh_sensor_series_get_t (C++ class), 470
esp_ble_mesh_sensor_series_get_t::op_en (C++ member), 471
esp_ble_mesh_sensor_series_get_t::property_id (C++ member), 471
esp_ble_mesh_sensor_series_get_t::raw_value_x1 (C++ member), 471
esp_ble_mesh_sensor_series_get_t::raw_value_x2 (C++ member), 471
esp_ble_mesh_sensor_series_status_cb_t (C++ class), 472
esp_ble_mesh_sensor_series_status_cb_t::property_ (C++ member), 472
esp_ble_mesh_sensor_series_status_cb_t::sensor_se (C++ member), 472
esp_ble_mesh_sensor_server_cb_event_t (C++ enum), 481
esp_ble_mesh_sensor_server_cb_param_t (C++ class), 477
esp_ble_mesh_sensor_server_cb_param_t::ctx

(C++ *member*), 477
esp_ble_mesh_sensor_server_cb_param_t::model (C++ *member*), 477
esp_ble_mesh_sensor_server_cb_param_t::value (C++ *member*), 477
esp_ble_mesh_sensor_server_cb_t (C++ *type*), 480
esp_ble_mesh_sensor_server_cb_value_t (C++ *union*), 468
esp_ble_mesh_sensor_server_cb_value_t::get (C++ *member*), 469
esp_ble_mesh_sensor_server_cb_value_t::set (C++ *member*), 469
esp_ble_mesh_sensor_server_cb_value_t::state_change (C++ *member*), 469
ESP_BLE_MESH_SENSOR_SERVER_EVT_MAX (C++ *enumerator*), 481
ESP_BLE_MESH_SENSOR_SERVER_RECV_GET_MSG_EVT (C++ *enumerator*), 481
esp_ble_mesh_sensor_server_recv_get_msg_t (C++ *union*), 468
esp_ble_mesh_sensor_server_recv_get_msg_t::sensor_cadence_get (C++ *member*), 468
esp_ble_mesh_sensor_server_recv_get_msg_t::sensor_column_get (C++ *member*), 468
esp_ble_mesh_sensor_server_recv_get_msg_t::sensor_descriptor_get (C++ *member*), 468
esp_ble_mesh_sensor_server_recv_get_msg_t::sensor_get (C++ *member*), 468
esp_ble_mesh_sensor_server_recv_get_msg_t::sensor_series_get (C++ *member*), 468
esp_ble_mesh_sensor_server_recv_get_msg_t::setting_get (C++ *member*), 468
esp_ble_mesh_sensor_server_recv_get_msg_t::settings_get (C++ *member*), 468
ESP_BLE_MESH_SENSOR_SERVER_RECV_SET_MSG_EVT (C++ *enumerator*), 481
esp_ble_mesh_sensor_server_recv_set_msg_t (C++ *union*), 468
esp_ble_mesh_sensor_server_recv_set_msg_t::sensor_cadence_set (C++ *member*), 468
esp_ble_mesh_sensor_server_recv_set_msg_t::setting_set (C++ *member*), 468
ESP_BLE_MESH_SENSOR_SERVER_STATE_CHANGE_EVT (C++ *enumerator*), 481
esp_ble_mesh_sensor_server_state_change_t (C++ *union*), 468
esp_ble_mesh_sensor_server_state_change_t::sensor_setting_status (C++ *member*), 468
esp_ble_mesh_sensor_server_state_change_t::sensor_status (C++ *member*), 468
ESP_BLE_MESH_SENSOR_SETTING_ACCESS_LEN (C 宏), 478
ESP_BLE_MESH_SENSOR_SETTING_ACCESS_READ (C 宏), 478
ESP_BLE_MESH_SENSOR_SETTING_ACCESS_READ_WRITE (C 宏), 478
esp_ble_mesh_sensor_setting_get_t (C++ *class*), 470
esp_ble_mesh_sensor_setting_get_t::model (C++ *member*), 470
esp_ble_mesh_sensor_setting_get_t::sensor_property_id (C++ *member*), 470
esp_ble_mesh_sensor_setting_get_t::setting_property_id (C++ *member*), 470
ESP_BLE_MESH_SENSOR_SETTING_PROPERTY_ID_LEN (C 宏), 478
esp_ble_mesh_sensor_setting_set_t (C++ *class*), 470
esp_ble_mesh_sensor_setting_set_t::sensor_property_id (C++ *member*), 470
esp_ble_mesh_sensor_setting_set_t::setting_property_id (C++ *member*), 470
esp_ble_mesh_sensor_setting_set_t::setting_raw (C++ *member*), 470
esp_ble_mesh_sensor_setting_status_cb_t (C++ *class*), 471
esp_ble_mesh_sensor_setting_status_cb_t::op_en (C++ *member*), 471
esp_ble_mesh_sensor_setting_status_cb_t::sensor_property_id (C++ *member*), 471
esp_ble_mesh_sensor_setting_status_cb_t::sensor_setting_access (C++ *member*), 471
esp_ble_mesh_sensor_setting_status_cb_t::sensor_setting_len (C++ *member*), 471
esp_ble_mesh_sensor_setting_status_cb_t::sensor_setting_property_id (C++ *member*), 472
esp_ble_mesh_sensor_setting_t (C++ *class*), 473
esp_ble_mesh_sensor_setting_t::access (C++ *member*), 473
esp_ble_mesh_sensor_setting_t::property_id (C++ *member*), 473
esp_ble_mesh_sensor_setting_t::raw (C++ *member*), 473
esp_ble_mesh_sensor_settings_get_t (C++ *class*), 469
esp_ble_mesh_sensor_settings_get_t::sensor_property_id (C++ *member*), 470
esp_ble_mesh_sensor_settings_status_cb_t (C++ *class*), 471
esp_ble_mesh_sensor_settings_status_cb_t::sensor_property_id (C++ *member*), 471
esp_ble_mesh_sensor_settings_status_cb_t::sensor_setting_property_ids (C++ *member*), 471
esp_ble_mesh_sensor_setup_srv_t (C++ *class*), 475
esp_ble_mesh_sensor_setup_srv_t::model (C++ *member*), 475
esp_ble_mesh_sensor_setup_srv_t::rsp_ctrl (C++ *member*), 475
esp_ble_mesh_sensor_setup_srv_t::state_count (C++ *member*), 475
esp_ble_mesh_sensor_setup_srv_t::states (C++ *member*), 475
esp_ble_mesh_sensor_srv_t (C++ *class*), 474
esp_ble_mesh_sensor_srv_t::model (C++ *member*), 474

esp_ble_mesh_sensor_srv_t::rsp_ctrl (C++ member), 474
esp_ble_mesh_sensor_srv_t::state_count (C++ member), 474
esp_ble_mesh_sensor_srv_t::states (C++ member), 475
esp_ble_mesh_sensor_state_t (C++ class), 474
esp_ble_mesh_sensor_state_t::cadence (C++ member), 474
esp_ble_mesh_sensor_state_t::descriptor (C++ member), 474
esp_ble_mesh_sensor_state_t::sensor_data (C++ member), 474
esp_ble_mesh_sensor_state_t::sensor_property_id (C++ member), 474
esp_ble_mesh_sensor_state_t::series_column (C++ member), 474
esp_ble_mesh_sensor_state_t::setting_count (C++ member), 474
esp_ble_mesh_sensor_state_t::settings (C++ member), 474
esp_ble_mesh_sensor_status_cb_t (C++ class), 472
esp_ble_mesh_sensor_status_cb_t::marshalled_sensor_data (C++ member), 472
ESP_BLE_MESH_SENSOR_STATUS_MIN_INTERVAL_LEN (C 宏), 479
ESP_BLE_MESH_SENSOR_STATUS_MIN_INTERVAL_MAX (C 宏), 479
ESP_BLE_MESH_SENSOR_STATUS_TRIGGER_TYPE_CHAR (C 宏), 479
ESP_BLE_MESH_SENSOR_STATUS_TRIGGER_TYPE_UINT16 (C 宏), 479
ESP_BLE_MESH_SENSOR_UNSPECIFIED_NEG_TOLERANCE (C 宏), 478
ESP_BLE_MESH_SENSOR_UNSPECIFIED_POS_TOLERANCE (C 宏), 478
ESP_BLE_MESH_SERVER_AUTO_RSP (C 宏), 378
ESP_BLE_MESH_SERVER_FLAG_MAX (C++ enumerator), 385
esp_ble_mesh_server_model_send_msg (C++ function), 391
ESP_BLE_MESH_SERVER_MODEL_STATE_MAX (C++ enumerator), 386
esp_ble_mesh_server_model_update_state (C++ function), 391
ESP_BLE_MESH_SERVER_MODEL_UPDATE_STATE_COMP_EVT (C++ enumerator), 386
esp_ble_mesh_server_recv_gen_admin_property_get_t (C++ class), 457
esp_ble_mesh_server_recv_gen_admin_property_get_t::property_id (C++ member), 457
esp_ble_mesh_server_recv_gen_admin_property_set_t (C++ class), 460
esp_ble_mesh_server_recv_gen_admin_property_set_t (C++ member), 460
esp_ble_mesh_server_recv_gen_client_properties_get_t (C++ class), 457
esp_ble_mesh_server_recv_gen_client_properties_get_t (C++ member), 457
esp_ble_mesh_server_recv_gen_def_trans_time_set_t (C++ class), 458
esp_ble_mesh_server_recv_gen_def_trans_time_set_t (C++ member), 459
esp_ble_mesh_server_recv_gen_delta_set_t (C++ class), 458
esp_ble_mesh_server_recv_gen_delta_set_t::delay (C++ member), 458
esp_ble_mesh_server_recv_gen_delta_set_t::delta_l (C++ member), 458
esp_ble_mesh_server_recv_gen_delta_set_t::op_en (C++ member), 458
esp_ble_mesh_server_recv_gen_delta_set_t::tid (C++ member), 458
esp_ble_mesh_server_recv_gen_delta_set_t::trans_t (C++ member), 458
esp_ble_mesh_server_recv_gen_level_set_t (C++ class), 457
esp_ble_mesh_server_recv_gen_level_set_t::delay (C++ member), 458
esp_ble_mesh_server_recv_gen_level_set_t::level (C++ member), 458
esp_ble_mesh_server_recv_gen_level_set_t::op_en (C++ member), 458
esp_ble_mesh_server_recv_gen_level_set_t::tid (C++ member), 458
esp_ble_mesh_server_recv_gen_level_set_t::trans_t (C++ member), 458
esp_ble_mesh_server_recv_gen_loc_global_set_t (C++ class), 459
esp_ble_mesh_server_recv_gen_loc_global_set_t::gl (C++ member), 460
esp_ble_mesh_server_recv_gen_loc_global_set_t::gl (C++ member), 460
esp_ble_mesh_server_recv_gen_loc_global_set_t::gl (C++ member), 460
esp_ble_mesh_server_recv_gen_loc_local_set_t (C++ class), 460
esp_ble_mesh_server_recv_gen_loc_local_set_t::flo (C++ member), 460
esp_ble_mesh_server_recv_gen_loc_local_set_t::loc (C++ member), 460
esp_ble_mesh_server_recv_gen_loc_local_set_t::loc (C++ member), 460
esp_ble_mesh_server_recv_gen_loc_local_set_t::loc (C++ member), 460
esp_ble_mesh_server_recv_gen_loc_local_set_t::unc (C++ member), 460
esp_ble_mesh_server_recv_gen_manufacturer_propert (C++ class), 457
esp_ble_mesh_server_recv_gen_manufacturer_propert

(C++ member), 457
esp_ble_mesh_server_recv_gen_manufactur (C++ class), 460
esp_ble_mesh_server_recv_gen_manufactur (C++ member), 461
esp_ble_mesh_server_recv_gen_manufactur (C++ member), 461
esp_ble_mesh_server_recv_gen_move_set_t (C++ class), 458
esp_ble_mesh_server_recv_gen_move_set_t (C++ member), 458
esp_ble_mesh_server_recv_gen_move_set_t (C++ member), 458
esp_ble_mesh_server_recv_gen_move_set_t (C++ member), 458
esp_ble_mesh_server_recv_gen_move_set_t (C++ member), 458
esp_ble_mesh_server_recv_gen_move_set_t (C++ member), 458
esp_ble_mesh_server_recv_gen_onoff_set_t (C++ class), 457
esp_ble_mesh_server_recv_gen_onoff_set_t (C++ member), 457
esp_ble_mesh_server_recv_gen_onoff_set_t (C++ member), 457
esp_ble_mesh_server_recv_gen_onoff_set_t (C++ member), 457
esp_ble_mesh_server_recv_gen_onoff_set_t (C++ member), 457
esp_ble_mesh_server_recv_gen_onoff_set_t (C++ member), 457
esp_ble_mesh_server_recv_gen_onpowerup_ (C++ class), 459
esp_ble_mesh_server_recv_gen_onpowerup_ (C++ member), 459
esp_ble_mesh_server_recv_gen_power_defa (C++ class), 459
esp_ble_mesh_server_recv_gen_power_defa (C++ member), 459
esp_ble_mesh_server_recv_gen_power_leve (C++ class), 459
esp_ble_mesh_server_recv_gen_power_leve (C++ member), 459
esp_ble_mesh_server_recv_gen_power_leve (C++ member), 459
esp_ble_mesh_server_recv_gen_power_leve (C++ member), 459
esp_ble_mesh_server_recv_gen_power_leve (C++ member), 459
esp_ble_mesh_server_recv_gen_power_leve (C++ member), 459
esp_ble_mesh_server_recv_gen_power_rang (C++ class), 459
esp_ble_mesh_server_recv_gen_power_rang (C++ member), 459
esp_ble_mesh_server_recv_gen_power_rang (C++ member), 459
esp_ble_mesh_server_recv_gen_user_prope (C++ class), 456
esp_ble_mesh_server_recv_gen_user_property_get_t (C++ member), 457
esp_ble_mesh_server_recv_gen_user_property_set_t (C++ class), 460
esp_ble_mesh_server_recv_gen_user_property_set_t (C++ member), 460
esp_ble_mesh_server_recv_gen_user_property_set_t (C++ member), 460
esp_ble_mesh_server_recv_light_ctl_default_set_t (C++ class), 536
esp_ble_mesh_server_recv_light_ctl_default_set_t (C++ member), 536
esp_ble_mesh_server_recv_light_ctl_default_set_t (C++ member), 536
esp_ble_mesh_server_recv_light_ctl_default_set_t (C++ member), 536
esp_ble_mesh_server_recv_light_ctl_set_t (C++ class), 535
esp_ble_mesh_server_recv_light_ctl_set_t::delay (C++ member), 535
esp_ble_mesh_server_recv_light_ctl_set_t::delta_u (C++ member), 535
esp_ble_mesh_server_recv_light_ctl_set_t::lightne (C++ member), 535
esp_ble_mesh_server_recv_light_ctl_set_t::op_en (C++ member), 535
esp_ble_mesh_server_recv_light_ctl_set_t::tempera (C++ member), 535
esp_ble_mesh_server_recv_light_ctl_set_t::tid (C++ member), 535
esp_ble_mesh_server_recv_light_ctl_set_t::trans_t (C++ member), 535
esp_ble_mesh_server_recv_light_ctl_temperature_ra (C++ class), 536
esp_ble_mesh_server_recv_light_ctl_temperature_ra (C++ member), 536
esp_ble_mesh_server_recv_light_ctl_temperature_ra (C++ member), 536
esp_ble_mesh_server_recv_light_ctl_temperature_se (C++ class), 535
esp_ble_mesh_server_recv_light_ctl_temperature_se (C++ member), 536
esp_ble_mesh_server_recv_light_ctl_temperature_se (C++ member), 535
esp_ble_mesh_server_recv_light_ctl_temperature_se (C++ member), 535
esp_ble_mesh_server_recv_light_ctl_temperature_se (C++ member), 535
esp_ble_mesh_server_recv_light_ctl_temperature_se (C++ member), 535
esp_ble_mesh_server_recv_light_ctl_temperature_se (C++ member), 536
esp_ble_mesh_server_recv_light_hsl_default_set_t (C++ class), 537
esp_ble_mesh_server_recv_light_hsl_default_set_t (C++ member), 537
esp_ble_mesh_server_recv_light_hsl_default_set_t

(*C++ member*), 537
esp_ble_mesh_server_recv_light_hsl_default_set_t::hsl_saturation
(*C++ member*), 537
esp_ble_mesh_server_recv_light_hsl_hue_set_t
(*C++ class*), 536
esp_ble_mesh_server_recv_light_hsl_hue_set_t::delay
(*C++ member*), 537
esp_ble_mesh_server_recv_light_hsl_hue_set_t::hue
(*C++ member*), 537
esp_ble_mesh_server_recv_light_hsl_hue_set_t::op_en
(*C++ member*), 537
esp_ble_mesh_server_recv_light_hsl_hue_set_t::tid
(*C++ member*), 537
esp_ble_mesh_server_recv_light_hsl_hue_set_t::trans_time
(*C++ member*), 537
esp_ble_mesh_server_recv_light_hsl_range_set_t
(*C++ class*), 537
esp_ble_mesh_server_recv_light_hsl_range_set_t::hue_range_max
(*C++ member*), 537
esp_ble_mesh_server_recv_light_hsl_range_set_t::hue_range_min
(*C++ member*), 537
esp_ble_mesh_server_recv_light_hsl_range_set_t::saturation_range_max
(*C++ member*), 538
esp_ble_mesh_server_recv_light_hsl_range_set_t::saturation_range_min
(*C++ member*), 537
esp_ble_mesh_server_recv_light_hsl_saturation_set_t
(*C++ class*), 537
esp_ble_mesh_server_recv_light_hsl_saturation_set_t::delay
(*C++ member*), 537
esp_ble_mesh_server_recv_light_hsl_saturation_set_t::op_en
(*C++ member*), 537
esp_ble_mesh_server_recv_light_hsl_saturation_set_t::saturation
(*C++ member*), 537
esp_ble_mesh_server_recv_light_hsl_saturation_set_t::tid
(*C++ member*), 537
esp_ble_mesh_server_recv_light_hsl_saturation_set_t::trans_time
(*C++ member*), 537
esp_ble_mesh_server_recv_light_hsl_set_t
(*C++ class*), 536
esp_ble_mesh_server_recv_light_hsl_set_t::delay
(*C++ member*), 536
esp_ble_mesh_server_recv_light_hsl_set_t::hue
(*C++ member*), 536
esp_ble_mesh_server_recv_light_hsl_set_t::lightness
(*C++ member*), 536
esp_ble_mesh_server_recv_light_hsl_set_t::op_en
(*C++ member*), 536
esp_ble_mesh_server_recv_light_hsl_set_t::saturation
(*C++ member*), 536
esp_ble_mesh_server_recv_light_hsl_set_t::tid
(*C++ member*), 536
esp_ble_mesh_server_recv_light_hsl_set_t::trans_time
(*C++ member*), 536
esp_ble_mesh_server_recv_light_lc_light_onoff_set_t
(*C++ class*), 539
esp_ble_mesh_server_recv_light_lc_light_onoff_set_t::delay
(*C++ member*), 539
esp_ble_mesh_server_recv_light_lc_light_onoff_set_t::onoff
(*C++ member*), 539
esp_ble_mesh_server_recv_light_lc_light_onoff_set_t::tid
(*C++ member*), 539
esp_ble_mesh_server_recv_light_lc_light_onoff_set_t::trans_time
(*C++ member*), 539
esp_ble_mesh_server_recv_light_lc_mode_set_t
(*C++ class*), 538
esp_ble_mesh_server_recv_light_lc_mode_set_t::mode
(*C++ member*), 539
esp_ble_mesh_server_recv_light_lc_om_set_t
(*C++ class*), 539
esp_ble_mesh_server_recv_light_lc_om_set_t::mode
(*C++ member*), 539
esp_ble_mesh_server_recv_light_lc_property_get_t
(*C++ class*), 534
esp_ble_mesh_server_recv_light_lc_property_get_t::property_id
(*C++ member*), 534
esp_ble_mesh_server_recv_light_lc_property_set_t
(*C++ class*), 539
esp_ble_mesh_server_recv_light_lc_property_set_t::property_id
(*C++ member*), 539
esp_ble_mesh_server_recv_light_lc_property_set_t::property_value
(*C++ member*), 539
esp_ble_mesh_server_recv_light_lightness_default_set_t
(*C++ class*), 535
esp_ble_mesh_server_recv_light_lightness_default_set_t::delay
(*C++ member*), 535
esp_ble_mesh_server_recv_light_lightness_linear_set_t
(*C++ class*), 534
esp_ble_mesh_server_recv_light_lightness_linear_set_t::delay
(*C++ member*), 534
esp_ble_mesh_server_recv_light_lightness_linear_set_t::op_en
(*C++ member*), 534
esp_ble_mesh_server_recv_light_lightness_linear_set_t::tid
(*C++ member*), 534
esp_ble_mesh_server_recv_light_lightness_linear_set_t::trans_time
(*C++ member*), 534
esp_ble_mesh_server_recv_light_lightness_range_set_t
(*C++ class*), 535
esp_ble_mesh_server_recv_light_lightness_range_set_t::delay
(*C++ member*), 535
esp_ble_mesh_server_recv_light_lightness_range_set_t::op_en
(*C++ member*), 535
esp_ble_mesh_server_recv_light_lightness_set_t
(*C++ class*), 534
esp_ble_mesh_server_recv_light_lightness_set_t::delay
(*C++ member*), 534
esp_ble_mesh_server_recv_light_lightness_set_t::lightness
(*C++ member*), 534
esp_ble_mesh_server_recv_light_lightness_set_t::op_en
(*C++ member*), 534
esp_ble_mesh_server_recv_light_lightness_set_t::tid
(*C++ member*), 534
esp_ble_mesh_server_recv_light_lightness_set_t::trans_time
(*C++ member*), 534

(C++ member), 534
esp_ble_mesh_server_recv_light_xyl_default_set_t
(C++ class), 538
esp_ble_mesh_server_recv_light_xyl_default_set_t::lightness
(C++ member), 538
esp_ble_mesh_server_recv_light_xyl_default_set_t::x
(C++ member), 538
esp_ble_mesh_server_recv_light_xyl_default_set_t::y
(C++ member), 538
esp_ble_mesh_server_recv_light_xyl_range_set_t
(C++ class), 538
esp_ble_mesh_server_recv_light_xyl_range_set_t::max_range
(C++ member), 538
esp_ble_mesh_server_recv_light_xyl_range_set_t::min_range
(C++ member), 538
esp_ble_mesh_server_recv_light_xyl_range_set_t::max_range
(C++ member), 538
esp_ble_mesh_server_recv_light_xyl_range_set_t::min_range
(C++ member), 538
esp_ble_mesh_server_recv_light_xyl_set_t
(C++ class), 538
esp_ble_mesh_server_recv_light_xyl_set_t::delay
(C++ member), 538
esp_ble_mesh_server_recv_light_xyl_set_t::lightness
(C++ member), 538
esp_ble_mesh_server_recv_light_xyl_set_t::op_en
(C++ member), 538
esp_ble_mesh_server_recv_light_xyl_set_t::tid
(C++ member), 538
esp_ble_mesh_server_recv_light_xyl_set_t::trans_time
(C++ member), 538
esp_ble_mesh_server_recv_light_xyl_set_t::x
(C++ member), 538
esp_ble_mesh_server_recv_light_xyl_set_t::y
(C++ member), 538
esp_ble_mesh_server_recv_scene_delete_t
(C++ class), 497
esp_ble_mesh_server_recv_scene_delete_t::scene_number
(C++ member), 497
esp_ble_mesh_server_recv_scene_recall_t
(C++ class), 497
esp_ble_mesh_server_recv_scene_recall_t::delay
(C++ member), 497
esp_ble_mesh_server_recv_scene_recall_t::op_en
(C++ member), 497
esp_ble_mesh_server_recv_scene_recall_t::scene_number
(C++ member), 497
esp_ble_mesh_server_recv_scene_recall_t::tid
(C++ member), 497
esp_ble_mesh_server_recv_scene_recall_t::trans_time
(C++ member), 497
esp_ble_mesh_server_recv_scene_store_t
(C++ class), 497
esp_ble_mesh_server_recv_scene_store_t::scene_number
(C++ member), 497
esp_ble_mesh_server_recv_scheduler_act_get_t
(C++ class), 496
esp_ble_mesh_server_recv_scheduler_act_get_t::index
(C++ member), 496
esp_ble_mesh_server_recv_scheduler_act_set_t
(C++ class), 497
esp_ble_mesh_server_recv_scheduler_act_set_t::action
(C++ member), 498
esp_ble_mesh_server_recv_scheduler_act_set_t::day
(C++ member), 498
esp_ble_mesh_server_recv_scheduler_act_set_t::day_of_week
(C++ member), 498
esp_ble_mesh_server_recv_scheduler_act_set_t::hour
(C++ member), 498
esp_ble_mesh_server_recv_scheduler_act_set_t::index
(C++ member), 497
esp_ble_mesh_server_recv_scheduler_act_set_t::minute
(C++ member), 498
esp_ble_mesh_server_recv_scheduler_act_set_t::month
(C++ member), 497
esp_ble_mesh_server_recv_scheduler_act_set_t::scene_number
(C++ member), 498
esp_ble_mesh_server_recv_scheduler_act_set_t::second
(C++ member), 498
esp_ble_mesh_server_recv_scheduler_act_set_t::trans_time
(C++ member), 498
esp_ble_mesh_server_recv_scheduler_act_set_t::year
(C++ member), 497
esp_ble_mesh_server_recv_sensor_cadence_get_t
(C++ class), 476
esp_ble_mesh_server_recv_sensor_cadence_get_t::property_id
(C++ member), 476
esp_ble_mesh_server_recv_sensor_cadence_set_t
(C++ class), 477
esp_ble_mesh_server_recv_sensor_cadence_set_t::case_
(C++ member), 477
esp_ble_mesh_server_recv_sensor_cadence_set_t::property_id
(C++ member), 477
esp_ble_mesh_server_recv_sensor_column_get_t
(C++ class), 476
esp_ble_mesh_server_recv_sensor_column_get_t::property_id
(C++ member), 477
esp_ble_mesh_server_recv_sensor_column_get_t::raw_value_x
(C++ member), 477
esp_ble_mesh_server_recv_sensor_descriptor_get_t
(C++ class), 476
esp_ble_mesh_server_recv_sensor_descriptor_get_t::property_id
(C++ member), 476
esp_ble_mesh_server_recv_sensor_descriptor_get_t::op_en
(C++ member), 476
esp_ble_mesh_server_recv_sensor_get_t
(C++ class), 476
esp_ble_mesh_server_recv_sensor_get_t::op_en
(C++ member), 476
esp_ble_mesh_server_recv_sensor_get_t::property_id
(C++ member), 476
esp_ble_mesh_server_recv_sensor_series_get_t
(C++ class), 477
esp_ble_mesh_server_recv_sensor_series_get_t::op_en
(C++ member), 477
esp_ble_mesh_server_recv_sensor_series_get_t::property_id

(C++ member), 477
esp_ble_mesh_server_recv_sensor_series_get_t::mpid (C++ member), 477
esp_ble_mesh_server_recv_sensor_setting_get_t (C++ class), 476
esp_ble_mesh_server_recv_sensor_setting_get_t::mpid (C++ member), 476
esp_ble_mesh_server_recv_sensor_setting_get_t::property_id (C++ member), 476
esp_ble_mesh_server_recv_sensor_setting_set_t (C++ class), 477
esp_ble_mesh_server_recv_sensor_setting_set_t::mpid (C++ member), 477
esp_ble_mesh_server_recv_sensor_setting_set_t::property_id (C++ member), 477
esp_ble_mesh_server_recv_sensor_setting_set_t::raw (C++ member), 477
esp_ble_mesh_server_recv_sensor_status_t (C++ class), 539
esp_ble_mesh_server_recv_sensor_status_t::data (C++ member), 539
esp_ble_mesh_server_recv_tai_utc_delta_set_t (C++ class), 496
esp_ble_mesh_server_recv_tai_utc_delta_set_t::padding (C++ member), 496
esp_ble_mesh_server_recv_tai_utc_delta_set_t::tai_utc_delta (C++ member), 497
esp_ble_mesh_server_recv_tai_utc_delta_set_t::time_authority (C++ member), 496
esp_ble_mesh_server_recv_time_role_set_t (C++ class), 497
esp_ble_mesh_server_recv_time_role_set_t::time_role (C++ member), 497
esp_ble_mesh_server_recv_time_set_t (C++ class), 496
esp_ble_mesh_server_recv_time_set_t::subsecond (C++ member), 496
esp_ble_mesh_server_recv_time_set_t::tai_seconds (C++ member), 496
esp_ble_mesh_server_recv_time_set_t::tai_utc_delta (C++ member), 496
esp_ble_mesh_server_recv_time_set_t::time_authority (C++ member), 496
esp_ble_mesh_server_recv_time_status_t (C++ class), 498
esp_ble_mesh_server_recv_time_status_t::subsecond (C++ member), 498
esp_ble_mesh_server_recv_time_status_t::tai_seconds (C++ member), 498
esp_ble_mesh_server_recv_time_status_t::tai_utc_delta (C++ member), 498
esp_ble_mesh_server_recv_time_status_t::time_authority (C++ member), 498
esp_ble_mesh_server_recv_time_status_t::time_zone_offset (C++ member), 498
esp_ble_mesh_server_recv_time_status_t::uncertainty (C++ member), 498
esp_ble_mesh_server_recv_time_zone_set_t (C++ class), 496
esp_ble_mesh_server_recv_time_zone_set_t::tai_zone_change (C++ member), 496
esp_ble_mesh_server_recv_time_zone_set_t::time_zone_offset (C++ member), 496
ESP_BLE_MESH_SERVER_RESP_BY_APP (C 宏), 378
esp_ble_mesh_server_rsp_ctrl_t (C++ class), 364
esp_ble_mesh_server_rsp_ctrl_t::get_auto_rsp (C++ member), 364
esp_ble_mesh_server_rsp_ctrl_t::set_auto_rsp (C++ member), 364
esp_ble_mesh_server_rsp_ctrl_t::status_auto_rsp (C++ member), 364
esp_ble_mesh_server_state_type_t (C++ enum), 385
esp_ble_mesh_server_state_value_t (C++ union), 353
esp_ble_mesh_server_state_value_t::delta_uv (C++ member), 353
esp_ble_mesh_server_state_value_t::gen_level (C++ member), 353
esp_ble_mesh_server_state_value_t::gen_onoff (C++ member), 353
esp_ble_mesh_server_state_value_t::gen_onpowerup (C++ member), 353
esp_ble_mesh_server_state_value_t::gen_power_actual (C++ member), 353
esp_ble_mesh_server_state_value_t::hue (C++ member), 353
esp_ble_mesh_server_state_value_t::level (C++ member), 353
esp_ble_mesh_server_state_value_t::light_ctl_lightness (C++ member), 353
esp_ble_mesh_server_state_value_t::light_ctl_temp (C++ member), 353
esp_ble_mesh_server_state_value_t::light_hsl (C++ member), 354
esp_ble_mesh_server_state_value_t::light_hsl_hue (C++ member), 354
esp_ble_mesh_server_state_value_t::light_hsl_lightness (C++ member), 354
esp_ble_mesh_server_state_value_t::light_hsl_saturation (C++ member), 354
esp_ble_mesh_server_state_value_t::light_lc_light_onoff (C++ member), 354
esp_ble_mesh_server_state_value_t::light_lightness_linear (C++ member), 353
esp_ble_mesh_server_state_value_t::light_lightness_actual (C++

(C++ member), 353
esp_ble_mesh_server_state_value_t::light_xyl (C++ member), 354
esp_ble_mesh_server_state_value_t::lightness (C++ member), 353
esp_ble_mesh_server_state_value_t::onoff (C++ member), 353
esp_ble_mesh_server_state_value_t::onpowerup (C++ member), 353
esp_ble_mesh_server_state_value_t::power (C++ member), 353
esp_ble_mesh_server_state_value_t::saturation (C++ member), 353
esp_ble_mesh_server_state_value_t::temperature (C++ member), 353
ESP_BLE_MESH_SERVER_TRANS_TIMER_START (C++ enumerator), 385
esp_ble_mesh_set_fast_prov_action (C++ function), 401
ESP_BLE_MESH_SET_FAST_PROV_ACTION_COMP_EVT (C++ enumerator), 384
esp_ble_mesh_set_fast_prov_info (C++ function), 401
ESP_BLE_MESH_SET_FAST_PROV_INFO_COMP_EVT (C++ enumerator), 384
esp_ble_mesh_set_unprovisioned_device_name (C++ function), 398
ESP_BLE_MESH_SETTINGS_UID_SIZE (C 宏), 364
ESP_BLE_MESH_SIG_MODEL (C 宏), 366
esp_ble_mesh_state_change_cfg_appkey_add_t (C++ class), 424
esp_ble_mesh_state_change_cfg_appkey_add_t::app_idx (C++ member), 424
esp_ble_mesh_state_change_cfg_appkey_add_t::appkey (C++ member), 424
esp_ble_mesh_state_change_cfg_appkey_add_t::net_idx (C++ member), 424
esp_ble_mesh_state_change_cfg_appkey_delete_t (C++ class), 425
esp_ble_mesh_state_change_cfg_appkey_delete_t::app_idx (C++ member), 425
esp_ble_mesh_state_change_cfg_appkey_delete_t::net_idx (C++ member), 425
esp_ble_mesh_state_change_cfg_appkey_update_t (C++ class), 424
esp_ble_mesh_state_change_cfg_appkey_update_t::app_idx (C++ member), 425
esp_ble_mesh_state_change_cfg_appkey_update_t::appkey (C++ member), 425
esp_ble_mesh_state_change_cfg_appkey_update_t::net_idx (C++ member), 425
esp_ble_mesh_state_change_cfg_kr_phase_set_t (C++ class), 425
esp_ble_mesh_state_change_cfg_kr_phase_set_t::kr_phase (C++ member), 426
esp_ble_mesh_state_change_cfg_kr_phase_set_t::net_idx (C++ member), 426
esp_ble_mesh_state_change_cfg_mod_pub_set_t (C++ class), 423
esp_ble_mesh_state_change_cfg_mod_pub_set_t::app_idx (C++ member), 423
esp_ble_mesh_state_change_cfg_mod_pub_set_t::company_id (C++ member), 423
esp_ble_mesh_state_change_cfg_mod_pub_set_t::cred_flag (C++ member), 423
esp_ble_mesh_state_change_cfg_mod_pub_set_t::element_addr (C++ member), 423
esp_ble_mesh_state_change_cfg_mod_pub_set_t::model_id (C++ member), 423
esp_ble_mesh_state_change_cfg_mod_pub_set_t::pub_addr (C++ member), 423
esp_ble_mesh_state_change_cfg_mod_pub_set_t::pub_period (C++ member), 423
esp_ble_mesh_state_change_cfg_mod_pub_set_t::pub_ttl (C++ member), 423
esp_ble_mesh_state_change_cfg_model_app_bind_t (C++ class), 425
esp_ble_mesh_state_change_cfg_model_app_bind_t::app_idx (C++ member), 425
esp_ble_mesh_state_change_cfg_model_app_bind_t::company_id (C++ member), 425
esp_ble_mesh_state_change_cfg_model_app_bind_t::element_addr (C++ member), 425
esp_ble_mesh_state_change_cfg_model_app_bind_t::model_id (C++ member), 425
esp_ble_mesh_state_change_cfg_model_app_unbind_t (C++ class), 425
esp_ble_mesh_state_change_cfg_model_app_unbind_t::app_idx (C++ member), 425
esp_ble_mesh_state_change_cfg_model_app_unbind_t::company_id (C++ member), 425
esp_ble_mesh_state_change_cfg_model_app_unbind_t::element_addr (C++ member), 425
esp_ble_mesh_state_change_cfg_model_app_unbind_t::model_id (C++ member), 425
esp_ble_mesh_state_change_cfg_model_sub_add_t (C++ class), 423
esp_ble_mesh_state_change_cfg_model_sub_add_t::company_id (C++ member), 423
esp_ble_mesh_state_change_cfg_model_sub_add_t::element_addr (C++ member), 423
esp_ble_mesh_state_change_cfg_model_sub_add_t::model_id (C++ member), 423
esp_ble_mesh_state_change_cfg_model_sub_add_t::sub_addr (C++ member), 423
esp_ble_mesh_state_change_cfg_model_sub_delete_t (C++ class), 423
esp_ble_mesh_state_change_cfg_model_sub_delete_t::company_id (C++ member), 424
esp_ble_mesh_state_change_cfg_model_sub_delete_t::element_addr (C++ member), 424
esp_ble_mesh_state_change_cfg_model_sub_delete_t::model_id (C++ member), 424

esp_ble_mesh_state_change_cfg_model_sub_delete_mesh_state_change_gen_manu_property_set_t
(C++ member), 424
esp_ble_mesh_state_change_cfg_netkey_add_t
(C++ class), 424
esp_ble_mesh_state_change_cfg_netkey_add_t::net_idx
(C++ member), 424
esp_ble_mesh_state_change_cfg_netkey_add_t::net_key
(C++ member), 424
esp_ble_mesh_state_change_cfg_netkey_delete_t
(C++ class), 424
esp_ble_mesh_state_change_cfg_netkey_delete_t::net_idx
(C++ member), 424
esp_ble_mesh_state_change_cfg_netkey_update_t
(C++ class), 424
esp_ble_mesh_state_change_cfg_netkey_update_t::net_idx
(C++ member), 424
esp_ble_mesh_state_change_cfg_netkey_update_t::net_key
(C++ member), 424
esp_ble_mesh_state_change_gen_admin_property_set_t
(C++ class), 456
esp_ble_mesh_state_change_gen_admin_property_set_t::access
(C++ member), 456
esp_ble_mesh_state_change_gen_admin_property_set_t::id
(C++ member), 456
esp_ble_mesh_state_change_gen_admin_property_set_t::value
(C++ member), 456
esp_ble_mesh_state_change_gen_def_trans_time_set_t
(C++ class), 455
esp_ble_mesh_state_change_gen_def_trans_time_set_t::trans_time
(C++ member), 455
esp_ble_mesh_state_change_gen_delta_set_t
(C++ class), 454
esp_ble_mesh_state_change_gen_delta_set_t::level
(C++ member), 454
esp_ble_mesh_state_change_gen_level_set_t
(C++ class), 454
esp_ble_mesh_state_change_gen_level_set_t::level
(C++ member), 454
esp_ble_mesh_state_change_gen_loc_global_set_t
(C++ class), 455
esp_ble_mesh_state_change_gen_loc_global_set_t::altitude
(C++ member), 456
esp_ble_mesh_state_change_gen_loc_global_set_t::latitude
(C++ member), 455
esp_ble_mesh_state_change_gen_loc_global_set_t::longitude
(C++ member), 455
esp_ble_mesh_state_change_gen_loc_local_set_t
(C++ class), 456
esp_ble_mesh_state_change_gen_loc_local_set_t::altitude
(C++ member), 456
esp_ble_mesh_state_change_gen_loc_local_set_t::east
(C++ member), 456
esp_ble_mesh_state_change_gen_loc_local_set_t::floor_number
(C++ member), 456
esp_ble_mesh_state_change_gen_loc_local_set_t::north
(C++ member), 456
esp_ble_mesh_state_change_gen_loc_local_set_t::uncertainty
(C++ member), 456
esp_ble_mesh_state_change_gen_manu_property_set_t
(C++ class), 456
esp_ble_mesh_state_change_gen_manu_property_set_t
(C++ member), 456
esp_ble_mesh_state_change_gen_manu_property_set_t
(C++ member), 456
esp_ble_mesh_state_change_gen_move_set_t
(C++ class), 454
esp_ble_mesh_state_change_gen_move_set_t::level
(C++ member), 455
esp_ble_mesh_state_change_gen_onoff_set_t
(C++ class), 454
esp_ble_mesh_state_change_gen_onoff_set_t::onoff
(C++ member), 454
esp_ble_mesh_state_change_gen_onpowerup_set_t
(C++ class), 455
esp_ble_mesh_state_change_gen_onpowerup_set_t::on
(C++ member), 455
esp_ble_mesh_state_change_gen_power_default_set_t
(C++ class), 455
esp_ble_mesh_state_change_gen_power_default_set_t
(C++ member), 455
esp_ble_mesh_state_change_gen_power_level_set_t
(C++ class), 455
esp_ble_mesh_state_change_gen_power_level_set_t::
(C++ member), 455
esp_ble_mesh_state_change_gen_power_range_set_t
(C++ class), 455
esp_ble_mesh_state_change_gen_power_range_set_t::
(C++ member), 455
esp_ble_mesh_state_change_gen_power_range_set_t::
(C++ member), 455
esp_ble_mesh_state_change_gen_user_property_set_t
(C++ class), 456
esp_ble_mesh_state_change_gen_user_property_set_t
(C++ member), 456
esp_ble_mesh_state_change_gen_user_property_set_t
(C++ member), 456
esp_ble_mesh_state_change_light_ctl_default_set_t
(C++ class), 531
esp_ble_mesh_state_change_light_ctl_default_set_t
(C++ member), 531
esp_ble_mesh_state_change_light_ctl_default_set_t
(C++ member), 531
esp_ble_mesh_state_change_light_ctl_default_set_t
(C++ member), 531
esp_ble_mesh_state_change_light_ctl_set_t
(C++ class), 530
esp_ble_mesh_state_change_light_ctl_set_t::delta_
(C++ member), 530
esp_ble_mesh_state_change_light_ctl_set_t::lightn
(C++ member), 530
esp_ble_mesh_state_change_light_ctl_set_t::temper
(C++ member), 530
esp_ble_mesh_state_change_light_ctl_temperature_r
(C++ class), 531
esp_ble_mesh_state_change_light_ctl_temperature_r
(C++ member), 531

esp_ble_mesh_state_change_light_ctl_temp (C++ member), 531
esp_ble_mesh_state_change_light_ctl_temp (C++ class), 530
esp_ble_mesh_state_change_light_ctl_temp (C++ member), 531
esp_ble_mesh_state_change_light_ctl_temp (C++ member), 531
esp_ble_mesh_state_change_light_hsl_defa (C++ class), 532
esp_ble_mesh_state_change_light_hsl_defa (C++ member), 532
esp_ble_mesh_state_change_light_hsl_defa (C++ member), 532
esp_ble_mesh_state_change_light_hsl_defa (C++ member), 532
esp_ble_mesh_state_change_light_hsl_hue (C++ class), 531
esp_ble_mesh_state_change_light_hsl_hue (C++ member), 531
esp_ble_mesh_state_change_light_hsl_rang (C++ class), 532
esp_ble_mesh_state_change_light_hsl_rang (C++ member), 532
esp_ble_mesh_state_change_light_hsl_rang (C++ member), 532
esp_ble_mesh_state_change_light_hsl_rang (C++ member), 532
esp_ble_mesh_state_change_light_hsl_rang (C++ member), 532
esp_ble_mesh_state_change_light_hsl_satu (C++ class), 531
esp_ble_mesh_state_change_light_hsl_satu (C++ member), 532
esp_ble_mesh_state_change_light_hsl_set (C++ class), 531
esp_ble_mesh_state_change_light_hsl_set (C++ member), 531
esp_ble_mesh_state_change_light_hsl_set (C++ member), 531
esp_ble_mesh_state_change_light_hsl_set (C++ member), 531
esp_ble_mesh_state_change_light_lc_ligh (C++ class), 533
esp_ble_mesh_state_change_light_lc_ligh (C++ member), 533
esp_ble_mesh_state_change_light_lc_mode (C++ class), 533
esp_ble_mesh_state_change_light_lc_mode (C++ member), 533
esp_ble_mesh_state_change_light_lc_om_se (C++ class), 533
esp_ble_mesh_state_change_light_lc_om_se (C++ member), 533
esp_ble_mesh_state_change_light_lc_prope (C++ class), 533
esp_ble_mesh_state_change_light_lc_prope (C++ member), 533
esp_ble_mesh_state_change_light_lc_prope (C++ member), 533
esp_ble_mesh_state_change_light_lightness (C++ class), 530
esp_ble_mesh_state_change_light_lightness (C++ member), 530
esp_ble_mesh_state_change_light_lightness (C++ member), 530
esp_ble_mesh_state_change_light_lightness (C++ member), 530
esp_ble_mesh_state_change_light_lightness (C++ member), 530
esp_ble_mesh_state_change_light_lightness (C++ member), 530
esp_ble_mesh_state_change_light_lightness (C++ class), 530
esp_ble_mesh_state_change_light_lightness (C++ member), 530
esp_ble_mesh_state_change_light_xyl_defa (C++ class), 532
esp_ble_mesh_state_change_light_xyl_defa (C++ member), 532
esp_ble_mesh_state_change_light_xyl_defa (C++ member), 532
esp_ble_mesh_state_change_light_xyl_defa (C++ member), 532
esp_ble_mesh_state_change_light_xyl_rang (C++ class), 533
esp_ble_mesh_state_change_light_xyl_rang (C++ member), 533
esp_ble_mesh_state_change_light_xyl_rang (C++ member), 533
esp_ble_mesh_state_change_light_xyl_rang (C++ member), 533
esp_ble_mesh_state_change_light_xyl_set (C++ class), 532
esp_ble_mesh_state_change_light_xyl_set (C++ member), 532
esp_ble_mesh_state_change_light_xyl_set (C++ member), 532
esp_ble_mesh_state_change_light_xyl_set (C++ member), 532
esp_ble_mesh_state_change_scene_delete_t (C++ class), 495
esp_ble_mesh_state_change_scene_delete_t (C++ member), 495
esp_ble_mesh_state_change_scene_recall_t (C++ class), 495
esp_ble_mesh_state_change_scene_recall_t (C++ member), 495
esp_ble_mesh_state_change_scene_store_t (C++ class), 495
esp_ble_mesh_state_change_scene_store_t (C++ member), 495

esp_ble_mesh_state_change_scheduler_acte (C++ class), 495
esp_ble_mesh_state_change_scheduler_acte (C++ member), 496
esp_ble_mesh_state_change_scheduler_acte (C++ member), 495
esp_ble_mesh_state_change_scheduler_acte (C++ member), 495
esp_ble_mesh_state_change_scheduler_acte (C++ member), 495
esp_ble_mesh_state_change_scheduler_acte (C++ member), 495
esp_ble_mesh_state_change_scheduler_acte (C++ member), 495
esp_ble_mesh_state_change_scheduler_acte (C++ member), 496
esp_ble_mesh_state_change_scheduler_acte (C++ member), 495
esp_ble_mesh_state_change_scheduler_acte (C++ member), 496
esp_ble_mesh_state_change_scheduler_acte (C++ member), 495
esp_ble_mesh_state_change_sensor_cadence (C++ class), 475
esp_ble_mesh_state_change_sensor_cadence (C++ member), 475
esp_ble_mesh_state_change_sensor_cadence (C++ member), 475
esp_ble_mesh_state_change_sensor_cadence (C++ member), 475
esp_ble_mesh_state_change_sensor_cadence (C++ member), 475
esp_ble_mesh_state_change_sensor_cadence (C++ member), 475
esp_ble_mesh_state_change_sensor_cadence (C++ member), 475
esp_ble_mesh_state_change_sensor_cadence (C++ member), 475
esp_ble_mesh_state_change_sensor_setting (C++ class), 475
esp_ble_mesh_state_change_sensor_setting (C++ member), 475
esp_ble_mesh_state_change_sensor_setting (C++ member), 475
esp_ble_mesh_state_change_sensor_setting (C++ member), 475
esp_ble_mesh_state_change_sensor_status (C++ class), 533
esp_ble_mesh_state_change_sensor_status (C++ member), 534
esp_ble_mesh_state_change_sensor_status (C++ member), 534
esp_ble_mesh_state_change_sensor_status (C++ member), 534
esp_ble_mesh_state_change_sensor_status (C++ member), 534
esp_ble_mesh_state_change_sensor_status_t::set_oc (C++ member), 534
esp_ble_mesh_state_change_sensor_status_t::state (C++ member), 534
esp_ble_mesh_state_change_tai_utc_delta_set_t (C++ class), 494
esp_ble_mesh_state_change_tai_utc_delta_set_t::ta (C++ member), 494
esp_ble_mesh_state_change_tai_utc_delta_set_t::ta (C++ member), 494
esp_ble_mesh_state_change_time_role_set_t (C++ class), 495
esp_ble_mesh_state_change_time_role_set_t::time_r (C++ member), 495
esp_ble_mesh_state_change_time_set_t (C++ class), 493
esp_ble_mesh_state_change_time_set_t::subsecond (C++ member), 494
esp_ble_mesh_state_change_time_set_t::tai_seconds (C++ member), 494
esp_ble_mesh_state_change_time_set_t::tai_utc_del (C++ member), 494
esp_ble_mesh_state_change_time_set_t::time_author (C++ member), 494
esp_ble_mesh_state_change_time_set_t::time_zone_o (C++ member), 494
esp_ble_mesh_state_change_time_set_t::uncertainty (C++ member), 494
esp_ble_mesh_state_change_time_status_t (C++ class), 494
esp_ble_mesh_state_change_time_status_t::subsecon (C++ member), 494
esp_ble_mesh_state_change_time_status_t::tai_seco (C++ member), 494
esp_ble_mesh_state_change_time_status_t::tai_utc_ (C++ member), 494
esp_ble_mesh_state_change_time_status_t::time_aut (C++ member), 494
esp_ble_mesh_state_change_time_status_t::time_zon (C++ member), 494
esp_ble_mesh_state_change_time_status_t::uncertai (C++ member), 494
esp_ble_mesh_state_change_time_zone_set_t (C++ class), 494
esp_ble_mesh_state_change_time_zone_set_t::tai_zo (C++ member), 494
esp_ble_mesh_state_change_time_zone_set_t::time_z (C++ member), 494
esp_ble_mesh_state_transition_t (C++ class), 363
esp_ble_mesh_state_transition_t::BLE_MESH_ATOMIC_ (C++ function), 363
esp_ble_mesh_state_transition_t::counter (C++ member), 363
esp_ble_mesh_state_transition_t::delay (C++ member), 363
esp_ble_mesh_state_transition_t::just_started (C++ member), 363

esp_ble_mesh_state_transition_t::quo_tt (C++ member), 363
esp_ble_mesh_state_transition_t::remain_time (C++ member), 363
esp_ble_mesh_state_transition_t::start_timestamp (C++ member), 363
esp_ble_mesh_state_transition_t::timer (C++ member), 363
esp_ble_mesh_state_transition_t::total_duration (C++ member), 363
esp_ble_mesh_state_transition_t::trans_time (C++ member), 363
ESP_BLE_MESH_STATIC_OOB (C++ enumerator), 380
ESP_BLE_MESH_SUPPLY_VOLTAGE_TOO_HIGH_ERROR (C 宏), 433
ESP_BLE_MESH_SUPPLY_VOLTAGE_TOO_HIGH_WARNING (C 宏), 433
ESP_BLE_MESH_SUPPLY_VOLTAGE_TOO_LOW_ERROR (C 宏), 433
ESP_BLE_MESH_SUPPLY_VOLTAGE_TOO_LOW_WARNING (C 宏), 433
ESP_BLE_MESH_TAI_OF_DELTA_CHANGE_LEN (C 宏), 500
ESP_BLE_MESH_TAI_OF_ZONE_CHANGE_LEN (C 宏), 500
ESP_BLE_MESH_TAI_SECONDS_LEN (C 宏), 500
ESP_BLE_MESH_TAI_UTC_DELTA_MAX_VALUE (C 宏), 500
esp_ble_mesh_tai_utc_delta_set_t (C++ class), 485
esp_ble_mesh_tai_utc_delta_set_t::padding (C++ member), 485
esp_ble_mesh_tai_utc_delta_set_t::tai_utc_delta_change (C++ member), 485
esp_ble_mesh_tai_utc_delta_set_t::tai_utc_delta_new (C++ member), 485
esp_ble_mesh_tai_utc_delta_status_cb_t (C++ class), 487
esp_ble_mesh_tai_utc_delta_status_cb_t::padding1 (C++ member), 487
esp_ble_mesh_tai_utc_delta_status_cb_t::padding2 (C++ member), 488
esp_ble_mesh_tai_utc_delta_status_cb_t::tai_utc_delta_change (C++ member), 488
esp_ble_mesh_tai_utc_delta_status_cb_t::tai_utc_delta_curr (C++ member), 487
esp_ble_mesh_tai_utc_delta_status_cb_t::tai_utc_delta_new (C++ member), 488
ESP_BLE_MESH_TAMPER_ERROR (C 宏), 434
ESP_BLE_MESH_TAMPER_WARNING (C 宏), 434
ESP_BLE_MESH_TIME_AUTHORITY (C 宏), 501
ESP_BLE_MESH_TIME_CLINET (C 宏), 501
ESP_BLE_MESH_TIME_NONE (C 宏), 501
ESP_BLE_MESH_TIME_RELAY (C 宏), 501
esp_ble_mesh_time_role_set_t (C++ class), 485
esp_ble_mesh_time_role_set_t::time_role (C++ member), 485
esp_ble_mesh_time_role_status_cb_t (C++ class), 488
esp_ble_mesh_time_role_status_cb_t::time_role (C++ member), 488
esp_ble_mesh_time_scene_client_cb_event_t (C++ enum), 502
esp_ble_mesh_time_scene_client_cb_param_t (C++ class), 489
esp_ble_mesh_time_scene_client_cb_param_t::error_code (C++ member), 489
esp_ble_mesh_time_scene_client_cb_param_t::params (C++ member), 489
esp_ble_mesh_time_scene_client_cb_param_t::status_cb (C++ member), 489
esp_ble_mesh_time_scene_client_cb_t (C++ type), 502
ESP_BLE_MESH_TIME_SCENE_CLIENT_EVT_MAX (C++ enumerator), 502
esp_ble_mesh_time_scene_client_get_state (C++ function), 481
ESP_BLE_MESH_TIME_SCENE_CLIENT_GET_STATE_EVT (C++ enumerator), 502
esp_ble_mesh_time_scene_client_get_state_t (C++ union), 482
esp_ble_mesh_time_scene_client_get_state_t::sched_get_state (C++ member), 482
ESP_BLE_MESH_TIME_SCENE_CLIENT_PUBLISH_EVT (C++ enumerator), 502
esp_ble_mesh_time_scene_client_set_state (C++ function), 482
ESP_BLE_MESH_TIME_SCENE_CLIENT_SET_STATE_EVT (C++ enumerator), 502
esp_ble_mesh_time_scene_client_set_state_t (C++ union), 482
esp_ble_mesh_time_scene_client_set_state_t::scene_get (C++ member), 482
esp_ble_mesh_time_scene_client_set_state_t::scene_set (C++ member), 482
esp_ble_mesh_time_scene_client_set_state_t::scene_set_delta (C++ member), 482
esp_ble_mesh_time_scene_client_set_state_t::sched_set (C++ member), 482
esp_ble_mesh_time_scene_client_set_state_t::tai_utc_delta_set (C++ member), 482
esp_ble_mesh_time_scene_client_set_state_t::time_get (C++ member), 482
esp_ble_mesh_time_scene_client_set_state_t::time_role_get (C++ member), 482
esp_ble_mesh_time_scene_client_status_cb_t (C++ union), 483
esp_ble_mesh_time_scene_client_status_cb_t::scene_get (C++ member), 483
esp_ble_mesh_time_scene_client_status_cb_t::scene_set (C++ member), 483
esp_ble_mesh_time_scene_client_status_cb_t::sched_get (C++ member), 483

(C++ member), 483
esp_ble_mesh_time_scene_client_status_cb_t::scheduler_status
(C++ member), 483
esp_ble_mesh_time_scene_client_status_cb_t::tai_utc_delta_status
(C++ member), 483
esp_ble_mesh_time_scene_client_status_cb_t::time_status
(C++ member), 483
esp_ble_mesh_time_scene_client_status_cb_t::time_zone_status
(C++ member), 483
esp_ble_mesh_time_scene_client_status_cb_t::uncertainty_status
(C++ member), 483
ESP_BLE_MESH_TIME_SCENE_CLIENT_TIMEOUT_EVT
(C++ enumerator), 502
esp_ble_mesh_time_scene_message_opcode_t
(C++ type), 380
esp_ble_mesh_time_scene_server_cb_event_t
(C++ enum), 502
esp_ble_mesh_time_scene_server_cb_param_t
(C++ class), 498
esp_ble_mesh_time_scene_server_cb_param_t::ctx
(C++ member), 498
esp_ble_mesh_time_scene_server_cb_param_t::model
(C++ member), 498
esp_ble_mesh_time_scene_server_cb_param_t::value
(C++ member), 498
esp_ble_mesh_time_scene_server_cb_t
(C++ type), 502
esp_ble_mesh_time_scene_server_cb_value_t
(C++ union), 484
esp_ble_mesh_time_scene_server_cb_value_t::get
(C++ member), 484
esp_ble_mesh_time_scene_server_cb_value_t::set
(C++ member), 484
esp_ble_mesh_time_scene_server_cb_value_t::status
(C++ member), 484
esp_ble_mesh_time_scene_server_cb_value_t::status_change
(C++ member), 484
ESP_BLE_MESH_TIME_SCENE_SERVER_EVT_MAX
(C++ enumerator), 503
ESP_BLE_MESH_TIME_SCENE_SERVER_RECV_GET_MSG_EVT
(C++ enumerator), 502
esp_ble_mesh_time_scene_server_recv_get_msg_t
(C++ union), 483
esp_ble_mesh_time_scene_server_recv_get_msg_t::act
(C++ member), 484
ESP_BLE_MESH_TIME_SCENE_SERVER_RECV_SET_MSG_EVT
(C++ enumerator), 502
esp_ble_mesh_time_scene_server_recv_set_msg_t
(C++ union), 484
esp_ble_mesh_time_scene_server_recv_set_msg_t::act
(C++ member), 484
esp_ble_mesh_time_scene_server_recv_set_msg_t::ctx
(C++ member), 484
esp_ble_mesh_time_scene_server_recv_set_msg_t::model
(C++ member), 484
esp_ble_mesh_time_scene_server_recv_set_msg_t::scheduler_status
(C++ member), 484
esp_ble_mesh_time_scene_server_recv_set_msg_t::tai_utc_delta_status
(C++ member), 484
esp_ble_mesh_time_scene_server_recv_set_msg_t::time_status
(C++ member), 484
ESP_BLE_MESH_TIME_SCENE_SERVER_RECV_STATUS_MSG_EVT
(C++ enumerator), 502
esp_ble_mesh_time_scene_server_recv_status_msg_t
(C++ union), 484
esp_ble_mesh_time_scene_server_recv_status_msg_t::ctx
(C++ member), 484
ESP_BLE_MESH_TIME_SCENE_SERVER_STATE_CHANGE_EVT
(C++ enumerator), 502
esp_ble_mesh_time_scene_server_state_change_t
(C++ union), 483
esp_ble_mesh_time_scene_server_state_change_t::sched
(C++ member), 483
esp_ble_mesh_time_scene_server_state_change_t::scheduler_status
(C++ member), 483
esp_ble_mesh_time_scene_server_state_change_t::scene
(C++ member), 483
esp_ble_mesh_time_scene_server_state_change_t::tai_utc_delta_status
(C++ member), 483
esp_ble_mesh_time_scene_server_state_change_t::time
(C++ member), 483
esp_ble_mesh_time_scene_server_state_change_t::time_status
(C++ member), 483
esp_ble_mesh_time_scene_server_state_change_t::tz
(C++ member), 483
esp_ble_mesh_time_scene_server_state_change_t::uncertainty_status
(C++ member), 483
esp_ble_mesh_time_set_t (C++ class), 485
esp_ble_mesh_time_set_t::sub_second
(C++ member), 485
esp_ble_mesh_time_set_t::tai_seconds
(C++ member), 485
esp_ble_mesh_time_set_t::tai_utc_delta
(C++ member), 485
esp_ble_mesh_time_set_t::time_authority
(C++ member), 485
esp_ble_mesh_time_set_t::time_zone_offset
(C++ member), 485
esp_ble_mesh_time_set_t::uncertainty
(C++ member), 485
esp_ble_mesh_time_setup_srv_t (C++ class), 490
esp_ble_mesh_time_setup_srv_t::delete
(C++ member), 491
esp_ble_mesh_time_setup_srv_t::model
(C++ member), 491
esp_ble_mesh_time_setup_srv_t::rsp_ctrl
(C++ member), 490
esp_ble_mesh_time_setup_srv_t::state
(C++ member), 490
esp_ble_mesh_time_srv_t (C++ class), 490
esp_ble_mesh_time_srv_t::model (C++

member), 490
esp_ble_mesh_time_srv_t::rsp_ctrl (*C++ member*), 490
esp_ble_mesh_time_srv_t::state (*C++ member*), 490
esp_ble_mesh_time_state_t (*C++ class*), 489
esp_ble_mesh_time_state_t::subsecond (*C++ member*), 489
esp_ble_mesh_time_state_t::tai_delta_change (*C++ member*), 490
esp_ble_mesh_time_state_t::tai_seconds (*C++ member*), 489
esp_ble_mesh_time_state_t::tai_utc_delta_curr (*C++ member*), 490
esp_ble_mesh_time_state_t::tai_utc_delta_new (*C++ member*), 490
esp_ble_mesh_time_state_t::tai_zone_change (*C++ member*), 490
esp_ble_mesh_time_state_t::time (*C++ member*), 490
esp_ble_mesh_time_state_t::time_authority (*C++ member*), 490
esp_ble_mesh_time_state_t::time_role (*C++ member*), 490
esp_ble_mesh_time_state_t::time_zone_offset_curr (*C++ member*), 490
esp_ble_mesh_time_state_t::time_zone_offset_new (*C++ member*), 490
esp_ble_mesh_time_state_t::uncertainty (*C++ member*), 489
esp_ble_mesh_time_status_cb_t (*C++ class*), 487
esp_ble_mesh_time_status_cb_t::sub_second (*C++ member*), 487
esp_ble_mesh_time_status_cb_t::tai_seconds (*C++ member*), 487
esp_ble_mesh_time_status_cb_t::tai_utc_delta (*C++ member*), 487
esp_ble_mesh_time_status_cb_t::time_authority (*C++ member*), 487
esp_ble_mesh_time_status_cb_t::time_zone_offset (*C++ member*), 487
esp_ble_mesh_time_status_cb_t::uncertainty (*C++ member*), 487
esp_ble_mesh_time_zone_set_t (*C++ class*), 485
esp_ble_mesh_time_zone_set_t::tai_zone_change (*C++ member*), 485
esp_ble_mesh_time_zone_set_t::time_zone_offset (*C++ member*), 485
esp_ble_mesh_time_zone_status_cb_t (*C++ class*), 487
esp_ble_mesh_time_zone_status_cb_t::tai_zone_change (*C++ member*), 487
esp_ble_mesh_time_zone_status_cb_t::time_zone_offset_curr (*C++ member*), 487
esp_ble_mesh_time_zone_status_cb_t::time_zone_offset_new (*C++ member*), 487
ESP_BLE_MESH_TRANSMIT (*C 宏*), 366
ESP_BLE_MESH_TTL_DEFAULT (*C 宏*), 364
ESP_BLE_MESH_TTL_MAX (*C 宏*), 364
ESP_BLE_MESH_TWIST (*C++ enumerator*), 381
ESP_BLE_MESH_TYPE_COMPLETE_CB (*C++ enumerator*), 380
ESP_BLE_MESH_TYPE_INTPUT_CB (*C++ enumerator*), 380
ESP_BLE_MESH_TYPE_LINK_CLOSE_CB (*C++ enumerator*), 380
ESP_BLE_MESH_TYPE_LINK_OPEN_CB (*C++ enumerator*), 380
ESP_BLE_MESH_TYPE_OUTPUT_NUM_CB (*C++ enumerator*), 380
ESP_BLE_MESH_TYPE_OUTPUT_STR_CB (*C++ enumerator*), 380
ESP_BLE_MESH_TYPE_PROV_CB (*C++ enumerator*), 380
ESP_BLE_MESH_TYPE_RESET_CB (*C++ enumerator*), 380
ESP_BLE_MESH_UNKNOWN_TAI_DELTA_CHANGE (*C 宏*), 500
ESP_BLE_MESH_UNKNOWN_TAI_SECONDS (*C 宏*), 500
ESP_BLE_MESH_UNKNOWN_TAI_ZONE_CHANGE (*C 宏*), 500
esp_ble_mesh_unprov_dev_add_t (*C++ class*), 360
esp_ble_mesh_unprov_dev_add_t::addr (*C++ member*), 360
esp_ble_mesh_unprov_dev_add_t::addr_type (*C++ member*), 360
esp_ble_mesh_unprov_dev_add_t::bearer (*C++ member*), 360
esp_ble_mesh_unprov_dev_add_t::oob_info (*C++ member*), 360
esp_ble_mesh_unprov_dev_add_t::uuid (*C++ member*), 360
ESP_BLE_MESH_VENDOR_MODEL (*C 宏*), 367
ESP_BLE_MESH_VIBRATE (*C++ enumerator*), 380
ESP_BLE_MESH_VIBRATION_ERROR (*C 宏*), 434
ESP_BLE_MESH_VIBRATION_WARNING (*C 宏*), 434
ESP_BLE_ONLY_ACCEPT_SPECIFIED_AUTH_DISABLE (*C 宏*), 195
ESP_BLE_ONLY_ACCEPT_SPECIFIED_AUTH_ENABLE (*C 宏*), 195
ESP_BLE_OOB_DISABLE (*C 宏*), 195
ESP_BLE_OOB_ENABLE (*C 宏*), 195
esp_ble_oob_req_reply (*C++ function*), 166
esp_ble_passkey_reply (*C++ function*), 166
esp_ble_pcsrk_keys_t (*C++ class*), 187
esp_ble_pcsrk_keys_t::counter (*C++ member*), 187
esp_ble_pcsrk_keys_t::csrk (*C++ member*), 187
esp_ble_pcsrk_keys_t::sec_level (*C++ member*), 187

esp_ble_penc_keys_t (C++ class), 187
esp_ble_penc_keys_t::ediv (C++ member), 187
esp_ble_penc_keys_t::key_size (C++ member), 187
esp_ble_penc_keys_t::ltk (C++ member), 187
esp_ble_penc_keys_t::rand (C++ member), 187
esp_ble_penc_keys_t::sec_level (C++ member), 187
esp_ble_pid_keys_t (C++ class), 187
esp_ble_pid_keys_t::addr_type (C++ member), 188
esp_ble_pid_keys_t::irk (C++ member), 188
esp_ble_pid_keys_t::static_addr (C++ member), 188
esp_ble_pkt_data_length_params_t (C++ class), 187
esp_ble_pkt_data_length_params_t::rx_len (C++ member), 187
esp_ble_pkt_data_length_params_t::tx_len (C++ member), 187
esp_ble_power_type_t (C++ enum), 153
ESP_BLE_PRIM_ADV_INT_MAX (C 宏), 155
ESP_BLE_PRIM_ADV_INT_MIN (C 宏), 155
ESP_BLE_PWR_TYPE_ADV (C++ enumerator), 153
ESP_BLE_PWR_TYPE_CONN_HDL0 (C++ enumerator), 153
ESP_BLE_PWR_TYPE_CONN_HDL1 (C++ enumerator), 153
ESP_BLE_PWR_TYPE_CONN_HDL2 (C++ enumerator), 153
ESP_BLE_PWR_TYPE_CONN_HDL3 (C++ enumerator), 153
ESP_BLE_PWR_TYPE_CONN_HDL4 (C++ enumerator), 153
ESP_BLE_PWR_TYPE_CONN_HDL5 (C++ enumerator), 153
ESP_BLE_PWR_TYPE_CONN_HDL6 (C++ enumerator), 153
ESP_BLE_PWR_TYPE_CONN_HDL7 (C++ enumerator), 153
ESP_BLE_PWR_TYPE_CONN_HDL8 (C++ enumerator), 153
ESP_BLE_PWR_TYPE_DEFAULT (C++ enumerator), 153
ESP_BLE_PWR_TYPE_NUM (C++ enumerator), 153
ESP_BLE_PWR_TYPE_SCAN (C++ enumerator), 153
esp_ble_remove_bond_device (C++ function), 166
esp_ble_resolve_adv_data (C++ function), 164
ESP_BLE_SCA_100PPM (C++ enumerator), 152
ESP_BLE_SCA_150PPM (C++ enumerator), 152
ESP_BLE_SCA_20PPM (C++ enumerator), 153
ESP_BLE_SCA_250PPM (C++ enumerator), 152
ESP_BLE_SCA_30PPM (C++ enumerator), 152
ESP_BLE_SCA_500PPM (C++ enumerator), 152
ESP_BLE_SCA_50PPM (C++ enumerator), 152
ESP_BLE_SCA_75PPM (C++ enumerator), 152
esp_ble_scan_dupilcate_list_flush (C++ function), 150
esp_ble_scan_duplicate_t (C++ enum), 203
esp_ble_scan_filter_t (C++ enum), 203
ESP_BLE_SCAN_PARAM_UNDEF (C 宏), 155
esp_ble_scan_params_t (C++ class), 186
esp_ble_scan_params_t::own_addr_type (C++ member), 186
esp_ble_scan_params_t::scan_duplicate (C++ member), 186
esp_ble_scan_params_t::scan_filter_policy (C++ member), 186
esp_ble_scan_params_t::scan_interval (C++ member), 186
esp_ble_scan_params_t::scan_type (C++ member), 186
esp_ble_scan_params_t::scan_window (C++ member), 186
ESP_BLE_SCAN_RSP_DATA_LEN_MAX (C 宏), 197
esp_ble_scan_type_t (C++ enum), 203
esp_ble_sec_act_t (C++ enum), 202
ESP_BLE_SEC_ENCRYPT (C++ enumerator), 202
ESP_BLE_SEC_ENCRYPT_MITM (C++ enumerator), 202
ESP_BLE_SEC_ENCRYPT_NO_MITM (C++ enumerator), 202
esp_ble_sec_key_notif_t (C++ class), 188
esp_ble_sec_key_notif_t::bd_addr (C++ member), 188
esp_ble_sec_key_notif_t::passkey (C++ member), 188
esp_ble_sec_req_t (C++ class), 188
esp_ble_sec_req_t::bd_addr (C++ member), 189
esp_ble_sec_t (C++ union), 172
esp_ble_sec_t::auth_cmpl (C++ member), 172
esp_ble_sec_t::ble_id_keys (C++ member), 172
esp_ble_sec_t::ble_key (C++ member), 172
esp_ble_sec_t::ble_req (C++ member), 172
esp_ble_sec_t::key_notif (C++ member), 172
esp_ble_set_encryption (C++ function), 165
ESP_BLE_SM_AUTHEN_REQ_MODE (C++ enumerator), 202
ESP_BLE_SM_CLEAR_STATIC_PASSKEY (C++ enumerator), 202
ESP_BLE_SM_IOCAP_MODE (C++ enumerator), 202
ESP_BLE_SM_MAX_KEY_SIZE (C++ enumerator), 202
ESP_BLE_SM_MAX_PARAM (C++ enumerator), 203
ESP_BLE_SM_MIN_KEY_SIZE (C++ enumerator), 202
ESP_BLE_SM_ONLY_ACCEPT_SPECIFIED_SEC_AUTH

(C++ enumerator), 202
ESP_BLE_SM_OOB_SUPPORT (C++ enumerator), 202
esp_ble_sm_param_t (C++ enum), 202
ESP_BLE_SM_PASSKEY (C++ enumerator), 202
ESP_BLE_SM_SET_INIT_KEY (C++ enumerator), 202
ESP_BLE_SM_SET_RSP_KEY (C++ enumerator), 202
ESP_BLE_SM_SET_STATIC_PASSKEY (C++ enumerator), 202
esp_ble_tx_power_get (C++ function), 147
esp_ble_tx_power_set (C++ function), 147
ESP_BLE_WHITELIST_ADD (C++ enumerator), 204
ESP_BLE_WHITELIST_CLEAR (C++ enumerator), 204
ESP_BLE_WHITELIST_REMOVE (C++ enumerator), 204
esp_ble_wl_addr_type_t (C++ enum), 159
esp_ble_wl_opration_t (C++ enum), 204
esp_bluedroid_deinit (C++ function), 159
esp_bluedroid_disable (C++ function), 159
esp_bluedroid_enable (C++ function), 159
esp_bluedroid_get_status (C++ function), 159
esp_bluedroid_init (C++ function), 159
ESP_BLUEDROID_STATUS_CHECK (C 宏), 155
ESP_BLUEDROID_STATUS_ENABLED (C++ enumerator), 160
ESP_BLUEDROID_STATUS_INITIALIZED (C++ enumerator), 160
esp_bluedroid_status_t (C++ enum), 160
ESP_BLUEDROID_STATUS_UNINITIALIZED (C++ enumerator), 160
esp_blufi_ap_record_t (C++ class), 251
esp_blufi_ap_record_t::rssi (C++ member), 251
esp_blufi_ap_record_t::ssid (C++ member), 251
ESP_BLUFI_BD_ADDR_LEN (C 宏), 251
esp_blufi_bd_addr_t (C++ type), 251
ESP_BLUFI_CALC_MD5_ERROR (C++ enumerator), 254
esp_blufi_callbacks_t (C++ class), 251
esp_blufi_callbacks_t::checksum_func (C++ member), 251
esp_blufi_callbacks_t::decrypt_func (C++ member), 251
esp_blufi_callbacks_t::encrypt_func (C++ member), 251
esp_blufi_callbacks_t::event_cb (C++ member), 251
esp_blufi_callbacks_t::negotiate_data_handler (C++ member), 251
esp_blufi_cb_event_t (C++ enum), 252
esp_blufi_cb_param_t (C++ union), 245
esp_blufi_cb_param_t::blufi_connect_evt_param (C++ class), 246
esp_blufi_cb_param_t::blufi_connect_evt_param::co (C++ member), 246
esp_blufi_cb_param_t::blufi_connect_evt_param::re (C++ member), 246
esp_blufi_cb_param_t::blufi_connect_evt_param::se (C++ member), 246
esp_blufi_cb_param_t::blufi_deinit_finish_evt_par (C++ class), 246
esp_blufi_cb_param_t::blufi_deinit_finish_evt_par (C++ member), 246
esp_blufi_cb_param_t::blufi_disconnect_evt_param (C++ class), 246
esp_blufi_cb_param_t::blufi_disconnect_evt_param: (C++ member), 247
esp_blufi_cb_param_t::blufi_get_error_evt_param (C++ class), 247
esp_blufi_cb_param_t::blufi_get_error_evt_param:: (C++ member), 247
esp_blufi_cb_param_t::blufi_init_finish_evt_param (C++ class), 247
esp_blufi_cb_param_t::blufi_init_finish_evt_param (C++ member), 247
esp_blufi_cb_param_t::blufi_recv_ca_evt_param (C++ class), 247
esp_blufi_cb_param_t::blufi_recv_ca_evt_param::ce (C++ member), 247
esp_blufi_cb_param_t::blufi_recv_ca_evt_param::ce (C++ member), 247
esp_blufi_cb_param_t::blufi_recv_client_cert_evt_ (C++ class), 247
esp_blufi_cb_param_t::blufi_recv_client_cert_evt_ (C++ member), 247
esp_blufi_cb_param_t::blufi_recv_client_cert_evt_ (C++ member), 247
esp_blufi_cb_param_t::blufi_recv_client_pkey_evt_ (C++ class), 247
esp_blufi_cb_param_t::blufi_recv_client_pkey_evt_ (C++ member), 247
esp_blufi_cb_param_t::blufi_recv_client_pkey_evt_ (C++ member), 247
esp_blufi_cb_param_t::blufi_recv_custom_data_evt_ (C++ class), 247
esp_blufi_cb_param_t::blufi_recv_custom_data_evt_ (C++ member), 248
esp_blufi_cb_param_t::blufi_recv_custom_data_evt_ (C++ member), 248
esp_blufi_cb_param_t::blufi_recv_server_cert_evt_ (C++ class), 248
esp_blufi_cb_param_t::blufi_recv_server_cert_evt_ (C++ member), 248
esp_blufi_cb_param_t::blufi_recv_server_cert_evt_ (C++ member), 248
esp_blufi_cb_param_t::blufi_recv_server_pkey_evt_ (C++ class), 248
esp_blufi_cb_param_t::blufi_recv_server_pkey_evt_ (C++ member), 248
esp_blufi_cb_param_t::blufi_recv_server_pkey_evt_ (C++ member), 248

esp_blufi_cb_param_t::blufi_recv_softap_auth_mode (C++ class), 248
esp_blufi_cb_param_t::blufi_recv_softap_auth_mode (C++ member), 248
esp_blufi_cb_param_t::blufi_recv_softap_channel (C++ class), 248
esp_blufi_cb_param_t::blufi_recv_softap_channel (C++ member), 248
esp_blufi_cb_param_t::blufi_recv_softap_max_conn_num (C++ class), 248
esp_blufi_cb_param_t::blufi_recv_softap_max_conn_num (C++ member), 248
esp_blufi_cb_param_t::blufi_recv_softap_passwd (C++ class), 248
esp_blufi_cb_param_t::blufi_recv_softap_passwd (C++ member), 249
esp_blufi_cb_param_t::blufi_recv_softap_ssid (C++ class), 249
esp_blufi_cb_param_t::blufi_recv_softap_ssid (C++ member), 249
esp_blufi_cb_param_t::blufi_recv_sta_bssid (C++ class), 249
esp_blufi_cb_param_t::blufi_recv_sta_bssid (C++ member), 249
esp_blufi_cb_param_t::blufi_recv_sta_passwd (C++ class), 249
esp_blufi_cb_param_t::blufi_recv_sta_passwd (C++ member), 249
esp_blufi_cb_param_t::blufi_recv_sta_ssid (C++ class), 249
esp_blufi_cb_param_t::blufi_recv_sta_ssid (C++ member), 249
esp_blufi_cb_param_t::blufi_recv_username (C++ class), 249
esp_blufi_cb_param_t::blufi_recv_username (C++ member), 249
esp_blufi_cb_param_t::blufi_set_wifi_mode (C++ class), 250
esp_blufi_cb_param_t::blufi_set_wifi_mode (C++ member), 250
esp_blufi_cb_param_t::ca (C++ member), 246
esp_blufi_cb_param_t::client_cert (C++ member), 246
esp_blufi_cb_param_t::client_pkey (C++ member), 246
esp_blufi_cb_param_t::connect (C++ member), 245
esp_blufi_cb_param_t::custom_data (C++ member), 246
esp_blufi_cb_param_t::deinit_finish (C++ member), 245
esp_blufi_cb_param_t::disconnect (C++ member), 245
esp_blufi_cb_param_t::init_finish (C++ member), 245
esp_blufi_cb_param_t::report_error (C++ member), 246
esp_blufi_cb_param_t::server_if (C++ member), 246
esp_blufi_cb_param_t::server_pkey (C++ member), 246
esp_blufi_cb_param_t::softap_auth_mode (C++ member), 246
esp_blufi_cb_param_t::softap_channel (C++ member), 246
esp_blufi_cb_param_t::softap_max_conn_num (C++ member), 246
esp_blufi_cb_param_t::softap_passwd (C++ member), 245
esp_blufi_cb_param_t::softap_ssid (C++ member), 245
esp_blufi_cb_param_t::sta_bssid (C++ member), 245
esp_blufi_cb_param_t::sta_passwd (C++ member), 245
esp_blufi_cb_param_t::sta_ssid (C++ member), 245
esp_blufi_cb_param_t::username (C++ member), 246
esp_blufi_cb_param_t::wifi_mode (C++ member), 245
ESP_BLUFI_CHECKSUM_ERROR (C++ enumerator), 253
esp_blufi_checksum_func_t (C++ type), 252
ESP_BLUFI_DATA_FORMAT_ERROR (C++ enumerator), 254
esp_blufi_extra_info_t::ssid_len
ESP_BLUFI_DECRYPT_ERROR (C++ enumerator), 253
esp_blufi_extra_info_t::sta_bssid
esp_blufi_decrypt_func_t (C++ type), 252
ESP_BLUFI_DH_MALLOC_FAILED (C++ enumerator), 253
ESP_BLUFI_DH_PARAM_ERROR (C++ enumerator), 253
esp_blufi_deinit_state_t (C++ enum), 253
ESP_BLUFI_ENCRYPT_ERROR (C++ enumerator), 253
esp_blufi_encrypt_func_t (C++ type), 252
esp_blufi_error_state_t (C++ enum), 253
ESP_BLUFI_EVENT_BLE_CONNECT (C++ enumerator), 252
ESP_BLUFI_EVENT_BLE_DISCONNECT (C++ enumerator), 252

esp_blufi_event_cb_t (*C++ type*), 251
ESP_BLUFI_EVENT_DEAUTHENTICATE_STA (*C++ enumerator*), 252
ESP_BLUFI_EVENT_DEINIT_FINISH (*C++ enumerator*), 252
ESP_BLUFI_EVENT_GET_WIFI_LIST (*C++ enumerator*), 253
ESP_BLUFI_EVENT_GET_WIFI_STATUS (*C++ enumerator*), 252
ESP_BLUFI_EVENT_INIT_FINISH (*C++ enumerator*), 252
ESP_BLUFI_EVENT_RECV_CA_CERT (*C++ enumerator*), 253
ESP_BLUFI_EVENT_RECV_CLIENT_CERT (*C++ enumerator*), 253
ESP_BLUFI_EVENT_RECV_CLIENT_PRIV_KEY (*C++ enumerator*), 253
ESP_BLUFI_EVENT_RECV_CUSTOM_DATA (*C++ enumerator*), 253
ESP_BLUFI_EVENT_RECV_SERVER_CERT (*C++ enumerator*), 253
ESP_BLUFI_EVENT_RECV_SERVER_PRIV_KEY (*C++ enumerator*), 253
ESP_BLUFI_EVENT_RECV_SLAVE_DISCONNECT_BLE (*C++ enumerator*), 253
ESP_BLUFI_EVENT_RECV_SOFTAP_AUTH_MODE (*C++ enumerator*), 253
ESP_BLUFI_EVENT_RECV_SOFTAP_CHANNEL (*C++ enumerator*), 253
ESP_BLUFI_EVENT_RECV_SOFTAP_MAX_CONN_NUM (*C++ enumerator*), 253
ESP_BLUFI_EVENT_RECV_SOFTAP_PASSWD (*C++ enumerator*), 253
ESP_BLUFI_EVENT_RECV_SOFTAP_SSID (*C++ enumerator*), 253
ESP_BLUFI_EVENT_RECV_STA_BSSID (*C++ enumerator*), 252
ESP_BLUFI_EVENT_RECV_STA_PASSWD (*C++ enumerator*), 252
ESP_BLUFI_EVENT_RECV_STA_SSID (*C++ enumerator*), 252
ESP_BLUFI_EVENT_RECV_USERNAME (*C++ enumerator*), 253
ESP_BLUFI_EVENT_REPORT_ERROR (*C++ enumerator*), 253
ESP_BLUFI_EVENT_REQ_CONNECT_TO_AP (*C++ enumerator*), 252
ESP_BLUFI_EVENT_REQ_DISCONNECT_FROM_AP (*C++ enumerator*), 252
ESP_BLUFI_EVENT_SET_WIFI_OPMODE (*C++ enumerator*), 252
esp_blufi_extra_info_t (*C++ class*), 250
esp_blufi_extra_info_t::softap_authmode (*C++ member*), 250
esp_blufi_extra_info_t::softap_authmode_set (*C++ member*), 250
esp_blufi_extra_info_t::softap_channel (*C++ member*), 250
esp_blufi_extra_info_t::softap_channel_set (*C++ member*), 250
esp_blufi_extra_info_t::softap_max_conn_num (*C++ member*), 250
esp_blufi_extra_info_t::softap_max_conn_num_set (*C++ member*), 250
esp_blufi_extra_info_t::softap_passwd (*C++ member*), 250
esp_blufi_extra_info_t::softap_passwd_len (*C++ member*), 250
esp_blufi_extra_info_t::softap_ssid (*C++ member*), 250
esp_blufi_extra_info_t::softap_ssid_len (*C++ member*), 250
esp_blufi_extra_info_t::sta_bssid (*C++ member*), 250
esp_blufi_extra_info_t::sta_bssid_set (*C++ member*), 250
esp_blufi_extra_info_t::sta_conn_end_reason (*C++ member*), 251
esp_blufi_extra_info_t::sta_conn_end_reason_set (*C++ member*), 251
esp_blufi_extra_info_t::sta_conn_rssi (*C++ member*), 251
esp_blufi_extra_info_t::sta_conn_rssi_set (*C++ member*), 251
esp_blufi_extra_info_t::sta_max_conn_retry (*C++ member*), 250
esp_blufi_extra_info_t::sta_max_conn_retry_set (*C++ member*), 251
esp_blufi_extra_info_t::sta_passwd (*C++ member*), 250
esp_blufi_extra_info_t::sta_passwd_len (*C++ member*), 250
esp_blufi_extra_info_t::sta_ssid (*C++ member*), 250
esp_blufi_extra_info_t::sta_ssid_len (*C++ member*), 250
esp_blufi_get_version (*C++ function*), 245
ESP_BLUFI_INIT_FAILED (*C++ enumerator*), 253
ESP_BLUFI_INIT_OK (*C++ enumerator*), 253
ESP_BLUFI_INIT_SECURITY_ERROR (*C++ enumerator*), 253
esp_blufi_init_state_t (*C++ enum*), 253
ESP_BLUFI_MAKE_PUBLIC_ERROR (*C++ enumerator*), 254
ESP_BLUFI_MSG_STATE_ERROR (*C++ enumerator*), 254
esp_blufi_negotiate_data_handler_t (*C++ type*), 252
esp_blufi_profile_deinit (*C++ function*), 244
esp_blufi_profile_init (*C++ function*), 244
ESP_BLUFI_READ_PARAM_ERROR (*C++ enumerator*), 254
esp_blufi_register_callbacks (*C++ function*), 244
esp_blufi_send_custom_data (*C++ function*),

245
esp_blufi_send_error_info (C++ function), 245
esp_blufi_send_wifi_conn_report (C++ function), 244
esp_blufi_send_wifi_list (C++ function), 245
ESP_BLUFI_SEQUENCE_ERROR (C++ enumerator), 253
ESP_BLUFI_STA_CONN_FAIL (C++ enumerator), 253
esp_blufi_sta_conn_state_t (C++ enum), 253
ESP_BLUFI_STA_CONN_SUCCESS (C++ enumerator), 253
ESP_BLUFI_STA_CONNECTING (C++ enumerator), 253
ESP_BLUFI_STA_NO_IP (C++ enumerator), 253
ESP_BLUFI_WIFI_SCAN_FAIL (C++ enumerator), 254
esp_bredr_sco_datapath_set (C++ function), 148
esp_bredr_tx_power_get (C++ function), 148
esp_bredr_tx_power_set (C++ function), 147
ESP_BT_CLR_COD_SERVICE_CLASS (C++ enumerator), 267
ESP_BT_COD_FORMAT_TYPE_1 (C 宏), 266
ESP_BT_COD_FORMAT_TYPE_BIT_MASK (C 宏), 266
ESP_BT_COD_FORMAT_TYPE_BIT_OFFSET (C 宏), 266
ESP_BT_COD_MAJOR_DEV_AV (C++ enumerator), 268
ESP_BT_COD_MAJOR_DEV_BIT_MASK (C 宏), 266
ESP_BT_COD_MAJOR_DEV_BIT_OFFSET (C 宏), 266
ESP_BT_COD_MAJOR_DEV_COMPUTER (C++ enumerator), 268
ESP_BT_COD_MAJOR_DEV_HEALTH (C++ enumerator), 269
ESP_BT_COD_MAJOR_DEV_IMAGING (C++ enumerator), 268
ESP_BT_COD_MAJOR_DEV_LAN_NAP (C++ enumerator), 268
ESP_BT_COD_MAJOR_DEV_MISC (C++ enumerator), 268
ESP_BT_COD_MAJOR_DEV_PERIPHERAL (C++ enumerator), 268
ESP_BT_COD_MAJOR_DEV_PHONE (C++ enumerator), 268
esp_bt_cod_major_dev_t (C++ enum), 268
ESP_BT_COD_MAJOR_DEV_TOY (C++ enumerator), 268
ESP_BT_COD_MAJOR_DEV_UNCATEGORIZED (C++ enumerator), 269
ESP_BT_COD_MAJOR_DEV_WEARABLE (C++ enumerator), 268
ESP_BT_COD_MINOR_DEV_BIT_MASK (C 宏), 266
ESP_BT_COD_MINOR_DEV_BIT_OFFSET (C 宏), 266
esp_bt_cod_mode_t (C++ enum), 266
ESP_BT_COD_SRVC_AUDIO (C++ enumerator), 268
ESP_BT_COD_SRVC_BIT_MASK (C 宏), 266
ESP_BT_COD_SRVC_BIT_OFFSET (C 宏), 266
ESP_BT_COD_SRVC_CAPTURING (C++ enumerator), 268
ESP_BT_COD_SRVC_INFORMATION (C++ enumerator), 268
ESP_BT_COD_SRVC_LMTD_DISCOVER (C++ enumerator), 267
ESP_BT_COD_SRVC_NETWORKING (C++ enumerator), 268
ESP_BT_COD_SRVC_NONE (C++ enumerator), 267
ESP_BT_COD_SRVC_OBJ_TRANSFER (C++ enumerator), 268
ESP_BT_COD_SRVC_POSITIONING (C++ enumerator), 267
ESP_BT_COD_SRVC_RENDERING (C++ enumerator), 268
esp_bt_cod_srvc_t (C++ enum), 267
ESP_BT_COD_SRVC_TELEPHONY (C++ enumerator), 268
esp_bt_cod_t (C++ class), 263
esp_bt_cod_t::major (C++ member), 263
esp_bt_cod_t::minor (C++ member), 263
esp_bt_cod_t::reserved_2 (C++ member), 263
esp_bt_cod_t::reserved_8 (C++ member), 263
esp_bt_cod_t::service (C++ member), 263
ESP_BT_CONNECTABLE (C++ enumerator), 267
esp_bt_connection_mode_t (C++ enum), 267
ESP_BT_CONTROLLER_CONFIG_MAGIC_VAL (C 宏), 152
esp_bt_controller_config_t (C++ class), 150
esp_bt_controller_config_t::auto_latency (C++ member), 151
esp_bt_controller_config_t::ble_max_conn (C++ member), 151
esp_bt_controller_config_t::ble_sca (C++ member), 151
esp_bt_controller_config_t::bt_legacy_auth_vs_evt (C++ member), 151
esp_bt_controller_config_t::bt_max_acl_conn (C++ member), 151
esp_bt_controller_config_t::bt_max_sync_conn (C++ member), 151
esp_bt_controller_config_t::bt_sco_datapath (C++ member), 151
esp_bt_controller_config_t::controller_debug_flag (C++ member), 151
esp_bt_controller_config_t::controller_task_prio (C++ member), 151
esp_bt_controller_config_t::controller_task_stack (C++ member), 151

esp_bt_controller_config_t::dup_list_refresh_period (C++ member), 151
esp_bt_controller_config_t::hci_uart_baudrate (C++ member), 151
esp_bt_controller_config_t::hci_uart_no (C++ member), 151
esp_bt_controller_config_t::hli (C++ member), 151
esp_bt_controller_config_t::magic (C++ member), 151
esp_bt_controller_config_t::mesh_adv_size (C++ member), 151
esp_bt_controller_config_t::mode (C++ member), 151
esp_bt_controller_config_t::normal_adv_size (C++ member), 151
esp_bt_controller_config_t::pcm_polar (C++ member), 151
esp_bt_controller_config_t::pcm_role (C++ member), 151
esp_bt_controller_config_t::scan_duplicate_mode (C++ member), 151
esp_bt_controller_config_t::scan_duplicate_type (C++ member), 151
esp_bt_controller_config_t::send_adv_reserved_size (C++ member), 151
esp_bt_controller_deinit (C++ function), 148
esp_bt_controller_disable (C++ function), 148
esp_bt_controller_enable (C++ function), 148
esp_bt_controller_get_status (C++ function), 148
esp_bt_controller_init (C++ function), 148
esp_bt_controller_mem_release (C++ function), 149
ESP_BT_CONTROLLER_STATUS_ENABLED (C++ enumerator), 153
ESP_BT_CONTROLLER_STATUS_IDLE (C++ enumerator), 153
ESP_BT_CONTROLLER_STATUS_INITED (C++ enumerator), 153
ESP_BT_CONTROLLER_STATUS_NUM (C++ enumerator), 153
esp_bt_controller_status_t (C++ enum), 153
esp_bt_dev_get_address (C++ function), 160
esp_bt_dev_set_device_name (C++ function), 160
esp_bt_dev_type_t (C++ enum), 158
ESP_BT_DEVICE_TYPE_BLE (C++ enumerator), 159
ESP_BT_DEVICE_TYPE_BREDR (C++ enumerator), 159
ESP_BT_DEVICE_TYPE_DUMO (C++ enumerator), 159
esp_bt_discovery_mode_t (C++ enum), 267
esp_bt_duplicate_exceptional_subcode_type_t (C++ enum), 204
esp_bt_eir_data_t (C++ class), 264
esp_bt_eir_data_t::fec_required (C++ member), 264
esp_bt_eir_data_t::flag (C++ member), 264
esp_bt_eir_data_t::include_txpower (C++ member), 264
esp_bt_eir_data_t::include_uuid (C++ member), 264
esp_bt_eir_data_t::manufacturer_len (C++ member), 264
esp_bt_eir_data_t::p_manufacturer_data (C++ member), 264
esp_bt_eir_data_t::p_url (C++ member), 264
esp_bt_eir_data_t::url_len (C++ member), 264
ESP_BT_EIR_FLAG_BREDR_NOT_SPT (C 宏), 265
ESP_BT_EIR_FLAG_DMT_CONTROLLER_SPT (C 宏), 265
ESP_BT_EIR_FLAG_DMT_HOST_SPT (C 宏), 265
ESP_BT_EIR_FLAG_GEN_DISC (C 宏), 265
ESP_BT_EIR_FLAG_LIMIT_DISC (C 宏), 265
ESP_BT_EIR_MAX_LEN (C 宏), 265
ESP_BT_EIR_TYPE_CMPL_128BITS_UUID (C 宏), 265
ESP_BT_EIR_TYPE_CMPL_16BITS_UUID (C 宏), 265
ESP_BT_EIR_TYPE_CMPL_32BITS_UUID (C 宏), 265
ESP_BT_EIR_TYPE_CMPL_LOCAL_NAME (C 宏), 265
ESP_BT_EIR_TYPE_FLAGS (C 宏), 264
ESP_BT_EIR_TYPE_INCMPL_128BITS_UUID (C 宏), 265
ESP_BT_EIR_TYPE_INCMPL_16BITS_UUID (C 宏), 265
ESP_BT_EIR_TYPE_INCMPL_32BITS_UUID (C 宏), 265
ESP_BT_EIR_TYPE_MANU_SPECIFIC (C 宏), 265
ESP_BT_EIR_TYPE_MAX_NUM (C 宏), 265
ESP_BT_EIR_TYPE_SHORT_LOCAL_NAME (C 宏), 265
esp_bt_eir_type_t (C++ type), 266
ESP_BT_EIR_TYPE_TX_POWER_LEVEL (C 宏), 265
ESP_BT_EIR_TYPE_URL (C 宏), 265
ESP_BT_GAP_ACL_CONN_CMPL_STAT_EVT (C++ enumerator), 269
ESP_BT_GAP_ACL_DISCONN_CMPL_STAT_EVT (C++ enumerator), 270
esp_bt_gap_afh_channels (C++ type), 266
ESP_BT_GAP_AFH_CHANNELS_LEN (C 宏), 264
ESP_BT_GAP_AUTH_CMPL_EVT (C++ enumerator), 269
esp_bt_gap_cancel_discovery (C++ function), 255

esp_bt_gap_cb_event_t (*C++ enum*), 269
esp_bt_gap_cb_param_t (*C++ union*), 258
esp_bt_gap_cb_param_t::acl_conn_cmpl_stat (*C++ member*), 259
esp_bt_gap_cb_param_t::acl_conn_cmpl_stat_param (*C++ class*), 259
esp_bt_gap_cb_param_t::acl_conn_cmpl_stat_param::bda (*C++ member*), 259
esp_bt_gap_cb_param_t::acl_conn_cmpl_stat_param::handle (*C++ member*), 259
esp_bt_gap_cb_param_t::acl_conn_cmpl_stat_param::stat (*C++ member*), 259
esp_bt_gap_cb_param_t::acl_disconn_cmpl_stat (*C++ member*), 259
esp_bt_gap_cb_param_t::acl_disconn_cmpl_stat_param (*C++ class*), 260
esp_bt_gap_cb_param_t::acl_disconn_cmpl_stat_param::bda (*C++ member*), 260
esp_bt_gap_cb_param_t::acl_disconn_cmpl_stat_param::handle (*C++ member*), 260
esp_bt_gap_cb_param_t::acl_disconn_cmpl_stat_param::reason (*C++ member*), 260
esp_bt_gap_cb_param_t::auth_cmpl (*C++ member*), 259
esp_bt_gap_cb_param_t::auth_cmpl_param (*C++ class*), 260
esp_bt_gap_cb_param_t::auth_cmpl_param::bda (*C++ member*), 260
esp_bt_gap_cb_param_t::auth_cmpl_param::device_name (*C++ member*), 260
esp_bt_gap_cb_param_t::auth_cmpl_param::stat (*C++ member*), 260
esp_bt_gap_cb_param_t::bt_remove_bond_dev_cmpl_param (*C++ class*), 260
esp_bt_gap_cb_param_t::bt_remove_bond_dev_cmpl_param::bda (*C++ member*), 260
esp_bt_gap_cb_param_t::bt_remove_bond_dev_cmpl_param::stat (*C++ member*), 260
esp_bt_gap_cb_param_t::cfm_req (*C++ member*), 259
esp_bt_gap_cb_param_t::cfm_req_param (*C++ class*), 260
esp_bt_gap_cb_param_t::cfm_req_param::bda (*C++ member*), 260
esp_bt_gap_cb_param_t::cfm_req_param::num_val (*C++ member*), 260
esp_bt_gap_cb_param_t::config_eir_data (*C++ member*), 259
esp_bt_gap_cb_param_t::config_eir_data_param (*C++ class*), 260
esp_bt_gap_cb_param_t::config_eir_data_param::eir_type (*C++ member*), 261
esp_bt_gap_cb_param_t::config_eir_data_param::stat (*C++ member*), 261
esp_bt_gap_cb_param_t::disc_res (*C++ member*), 259
esp_bt_gap_cb_param_t::disc_res_param (*C++ class*), 261
esp_bt_gap_cb_param_t::disc_res_param::bda (*C++ member*), 261
esp_bt_gap_cb_param_t::disc_res_param::num_prop (*C++ member*), 261
esp_bt_gap_cb_param_t::disc_res_param::prop (*C++ member*), 261
esp_bt_gap_cb_param_t::disc_st_chg (*C++ member*), 259
esp_bt_gap_cb_param_t::disc_state_changed_param (*C++ class*), 261
esp_bt_gap_cb_param_t::disc_state_changed_param::state (*C++ member*), 261
esp_bt_gap_cb_param_t::key_notif (*C++ member*), 259
esp_bt_gap_cb_param_t::key_notif_param (*C++ class*), 261
esp_bt_gap_cb_param_t::key_notif_param::bda (*C++ member*), 261
esp_bt_gap_cb_param_t::key_notif_param::passkey (*C++ member*), 261
esp_bt_gap_cb_param_t::key_req (*C++ member*), 259
esp_bt_gap_cb_param_t::key_req_param (*C++ class*), 261
esp_bt_gap_cb_param_t::key_req_param::bda (*C++ member*), 261
esp_bt_gap_cb_param_t::mode_chg (*C++ member*), 259
esp_bt_gap_cb_param_t::mode_chg_param (*C++ class*), 261
esp_bt_gap_cb_param_t::mode_chg_param::bda (*C++ member*), 262
esp_bt_gap_cb_param_t::mode_chg_param::mode (*C++ member*), 262
esp_bt_gap_cb_param_t::pin_req (*C++ member*), 259
esp_bt_gap_cb_param_t::pin_req_param (*C++ class*), 262
esp_bt_gap_cb_param_t::pin_req_param::bda (*C++ member*), 262
esp_bt_gap_cb_param_t::pin_req_param::min_16_digit (*C++ member*), 262
esp_bt_gap_cb_param_t::qos_cmpl (*C++ member*), 259
esp_bt_gap_cb_param_t::qos_cmpl_param (*C++ class*), 262
esp_bt_gap_cb_param_t::qos_cmpl_param::bda (*C++ member*), 262
esp_bt_gap_cb_param_t::qos_cmpl_param::stat (*C++ member*), 262
esp_bt_gap_cb_param_t::qos_cmpl_param::t_poll (*C++ member*), 262
esp_bt_gap_cb_param_t::read_rmt_name (*C++ member*), 259
esp_bt_gap_cb_param_t::read_rmt_name_param (*C++ class*), 262

esp_bt_gap_cb_param_t::read_rmt_name_param::bda (C++ member), 262
esp_bt_gap_cb_param_t::read_rmt_name_param::stat (C++ member), 262
esp_bt_gap_cb_param_t::read_rmt_name_param::status (C++ member), 262
esp_bt_gap_cb_param_t::read_rssi_delta (C++ member), 259
esp_bt_gap_cb_param_t::read_rssi_delta_param (C++ class), 262
esp_bt_gap_cb_param_t::read_rssi_delta_param::bda (C++ member), 262
esp_bt_gap_cb_param_t::read_rssi_delta_param::rssi_delta (C++ member), 262
esp_bt_gap_cb_param_t::read_rssi_delta_param::stat (C++ member), 262
esp_bt_gap_cb_param_t::remove_bond_dev_cmpl (C++ member), 259
esp_bt_gap_cb_param_t::rmt_srvc_rec (C++ member), 259
esp_bt_gap_cb_param_t::rmt_srvc_rec_param (C++ class), 263
esp_bt_gap_cb_param_t::rmt_srvc_rec_param::bda (C++ member), 263
esp_bt_gap_cb_param_t::rmt_srvc_rec_param::stat (C++ member), 263
esp_bt_gap_cb_param_t::rmt_srvcs (C++ member), 259
esp_bt_gap_cb_param_t::rmt_srvcs_param (C++ class), 263
esp_bt_gap_cb_param_t::rmt_srvcs_param::bda (C++ member), 263
esp_bt_gap_cb_param_t::rmt_srvcs_param::num_uuids (C++ member), 263
esp_bt_gap_cb_param_t::rmt_srvcs_param::stat (C++ member), 263
esp_bt_gap_cb_param_t::rmt_srvcs_param::uuid_list (C++ member), 263
esp_bt_gap_cb_param_t::set_afh_channels (C++ member), 259
esp_bt_gap_cb_param_t::set_afh_channels_param (C++ class), 263
esp_bt_gap_cb_param_t::set_afh_channels_param::stat (C++ member), 263
esp_bt_gap_cb_t (C++ type), 266
ESP_BT_GAP_CFM_REQ_EVT (C++ enumerator), 269
esp_bt_gap_config_eir_data (C++ function), 256
ESP_BT_GAP_CONFIG_EIR_DATA_EVT (C++ enumerator), 269
ESP_BT_GAP_DEV_PROP_BDNAME (C++ enumerator), 267
ESP_BT_GAP_DEV_PROP_COD (C++ enumerator), 267
ESP_BT_GAP_DEV_PROP_EIR (C++ enumerator), 267
ESP_BT_GAP_DEV_PROP_RSSI (C++ enumerator), 267
esp_bt_gap_dev_prop_t (C++ class), 264
esp_bt_gap_dev_prop_t::len (C++ member), 264
esp_bt_gap_dev_prop_t::type (C++ member), 264
esp_bt_gap_dev_prop_t::val (C++ member), 264
esp_bt_gap_dev_prop_type_t (C++ enum), 267
ESP_BT_GAP_DISC_RES_EVT (C++ enumerator), 269
ESP_BT_GAP_DISC_STATE_CHANGED_EVT (C++ enumerator), 269
ESP_BT_GAP_DISCOVERY_STARTED (C++ enumerator), 269
esp_bt_gap_discovery_state_t (C++ enum), 269
ESP_BT_GAP_DISCOVERY_STOPPED (C++ enumerator), 269
ESP_BT_GAP_EIR_DATA_LEN (C 宏), 264
ESP_BT_GAP_EVT_MAX (C++ enumerator), 270
esp_bt_gap_get_bond_device_list (C++ function), 257
esp_bt_gap_get_bond_device_num (C++ function), 257
esp_bt_gap_get_cod (C++ function), 256
esp_bt_gap_get_cod_format_type (C++ function), 254
esp_bt_gap_get_cod_major_dev (C++ function), 254
esp_bt_gap_get_cod_minor_dev (C++ function), 254
esp_bt_gap_get_cod_srvc (C++ function), 254
esp_bt_gap_get_remote_service_record (C++ function), 255
esp_bt_gap_get_remote_services (C++ function), 255
esp_bt_gap_is_valid_cod (C++ function), 254
ESP_BT_GAP_KEY_NOTIF_EVT (C++ enumerator), 269
ESP_BT_GAP_KEY_REQ_EVT (C++ enumerator), 269
ESP_BT_GAP_MAX_BDNAME_LEN (C 宏), 264
ESP_BT_GAP_MAX_INQ_LEN (C 宏), 266
ESP_BT_GAP_MIN_INQ_LEN (C 宏), 266
ESP_BT_GAP_MODE_CHG_EVT (C++ enumerator), 269
esp_bt_gap_pin_reply (C++ function), 257
ESP_BT_GAP_PIN_REQ_EVT (C++ enumerator), 269
ESP_BT_GAP_QOS_CMPL_EVT (C++ enumerator), 269
esp_bt_gap_read_remote_name (C++ function), 258
ESP_BT_GAP_READ_REMOTE_NAME_EVT (C++ enumerator), 269
esp_bt_gap_read_rssi_delta (C++ function),

256
ESP_BT_GAP_READ_RSSI_DELTA_EVT (C++ enumerator), 269
esp_bt_gap_register_callback (C++ function), 254
ESP_BT_GAP_REMOVE_BOND_DEV_COMPLETE_EVT (C++ enumerator), 269
esp_bt_gap_remove_bond_device (C++ function), 256
esp_bt_gap_resolve_eir_data (C++ function), 256
ESP_BT_GAP_RMT_SRVC_REC_EVT (C++ enumerator), 269
ESP_BT_GAP_RMT_SRVCS_EVT (C++ enumerator), 269
ESP_BT_GAP_RSSI_HIGH_THRLD (C 宏), 264
ESP_BT_GAP_RSSI_LOW_THRLD (C 宏), 264
esp_bt_gap_set_afh_channels (C++ function), 258
ESP_BT_GAP_SET_AFH_CHANNELS_EVT (C++ enumerator), 269
esp_bt_gap_set_cod (C++ function), 256
esp_bt_gap_set_pin (C++ function), 257
esp_bt_gap_set_qos (C++ function), 258
esp_bt_gap_set_scan_mode (C++ function), 255
esp_bt_gap_set_security_param (C++ function), 257
esp_bt_gap_ssp_confirm_reply (C++ function), 258
esp_bt_gap_ssp_passkey_reply (C++ function), 258
esp_bt_gap_start_discovery (C++ function), 255
ESP_BT_GENERAL_DISCOVERABLE (C++ enumerator), 267
esp_bt_hf_answer_call (C++ function), 323
esp_bt_hf_bsir (C++ function), 323
esp_bt_hf_cind_response (C++ function), 322
esp_bt_hf_clcc_response (C++ function), 323
ESP_BT_HF_CLIENT_NUMBER_LEN (C 宏), 317
ESP_BT_HF_CLIENT_OPERATOR_NAME_LEN (C 宏), 317
esp_bt_hf_cmee_response (C++ function), 322
esp_bt_hf_cnum_response (C++ function), 323
esp_bt_hf_connect (C++ function), 320
esp_bt_hf_connect_audio (C++ function), 321
esp_bt_hf_cops_response (C++ function), 322
esp_bt_hf_deinit (C++ function), 320
esp_bt_hf_disconnect (C++ function), 320
esp_bt_hf_disconnect_audio (C++ function), 321
esp_bt_hf_end_call (C++ function), 324
esp_bt_hf_indchange_notification (C++ function), 322
esp_bt_hf_init (C++ function), 320
ESP_BT_HF_NUMBER_LEN (C 宏), 301
ESP_BT_HF_OPERATOR_NAME_LEN (C 宏), 301
esp_bt_hf_out_call (C++ function), 324
esp_bt_hf_register_callback (C++ function), 320
esp_bt_hf_register_data_callback (C++ function), 325
esp_bt_hf_reject_call (C++ function), 324
esp_bt_hf_volume_control (C++ function), 321
esp_bt_hf_vra (C++ function), 321
ESP_BT_INIT_COD (C++ enumerator), 267
ESP_BT_INQ_MODE_GENERAL_INQUIRY (C++ enumerator), 270
ESP_BT_INQ_MODE_LIMITED_INQUIRY (C++ enumerator), 270
esp_bt_inq_mode_t (C++ enum), 270
ESP_BT_IO_CAP_IN (C 宏), 265
ESP_BT_IO_CAP_IO (C 宏), 265
ESP_BT_IO_CAP_NONE (C 宏), 265
ESP_BT_IO_CAP_OUT (C 宏), 265
esp_bt_io_cap_t (C++ type), 266
ESP_BT_LIMITED_DISCOVERABLE (C++ enumerator), 267
esp_bt_mem_release (C++ function), 149
ESP_BT_MODE_BLE (C++ enumerator), 152
ESP_BT_MODE_BTDM (C++ enumerator), 152
ESP_BT_MODE_CLASSIC_BT (C++ enumerator), 152
ESP_BT_MODE_IDLE (C++ enumerator), 152
esp_bt_mode_t (C++ enum), 152
ESP_BT_NON_CONNECTABLE (C++ enumerator), 267
ESP_BT_NON_DISCOVERABLE (C++ enumerator), 267
ESP_BT_OCTET16_LEN (C 宏), 155
esp_bt_octet16_t (C++ type), 156
ESP_BT_OCTET8_LEN (C 宏), 155
esp_bt_octet8_t (C++ type), 156
ESP_BT_PIN_CODE_LEN (C 宏), 265
esp_bt_pin_code_t (C++ type), 266
ESP_BT_PIN_TYPE_FIXED (C++ enumerator), 268
esp_bt_pin_type_t (C++ enum), 268
ESP_BT_PIN_TYPE_VARIABLE (C++ enumerator), 268
ESP_BT_PM_MD_ACTIVE (C 宏), 265
ESP_BT_PM_MD_HOLD (C 宏), 265
ESP_BT_PM_MD_PARK (C 宏), 265
ESP_BT_PM_MD_SNIFF (C 宏), 265
esp_bt_pm_mode_t (C++ type), 266
ESP_BT_SET_COD_ALL (C++ enumerator), 267
ESP_BT_SET_COD_MAJOR_MINOR (C++ enumerator), 267
ESP_BT_SET_COD_SERVICE_CLASS (C++ enumerator), 267
esp_bt_sleep_disable (C++ function), 150
esp_bt_sleep_enable (C++ function), 150
ESP_BT_SP_IOCAP_MODE (C++ enumerator), 268
esp_bt_sp_param_t (C++ enum), 268

ESP_BT_STATUS_AUTH_FAILURE (*C++ enumerator*), 156
ESP_BT_STATUS_AUTH_REJECTED (*C++ enumerator*), 157
ESP_BT_STATUS_BASE_FOR_HCI_ERR (*C 宏*), 155
ESP_BT_STATUS_BUSY (*C++ enumerator*), 156
ESP_BT_STATUS_CONTROL_LE_DATA_LEN_UNSUPPORTED (*C++ enumerator*), 157
ESP_BT_STATUS_DONE (*C++ enumerator*), 156
ESP_BT_STATUS_EIR_TOO_LARGE (*C++ enumerator*), 157
ESP_BT_STATUS_ERR_ILLEGAL_PARAMETER_FMT (*C++ enumerator*), 157
ESP_BT_STATUS_FAIL (*C++ enumerator*), 156
ESP_BT_STATUS_HCI_AUTH_FAILURE (*C++ enumerator*), 157
ESP_BT_STATUS_HCI_CHAN_CLASSIF_NOT_SUPPORTED (*C++ enumerator*), 158
ESP_BT_STATUS_HCI_COMMAND_DISALLOWED (*C++ enumerator*), 157
ESP_BT_STATUS_HCI_CONN_CAUSE_LOCAL_HOST (*C++ enumerator*), 157
ESP_BT_STATUS_HCI_CONN_FAILED_ESTABLISHMENT (*C++ enumerator*), 158
ESP_BT_STATUS_HCI_CONN_TOUT_DUE_TO_MIC_FAILURE (*C++ enumerator*), 158
ESP_BT_STATUS_HCI_CONNECTION_EXISTS (*C++ enumerator*), 157
ESP_BT_STATUS_HCI_CONNECTION_TOUT (*C++ enumerator*), 157
ESP_BT_STATUS_HCI_CONTROLLER_BUSY (*C++ enumerator*), 158
ESP_BT_STATUS_HCI_DIFF_TRANSACTION_COLLISION (*C++ enumerator*), 158
ESP_BT_STATUS_HCI_DIRECTED_ADVERTISING_TIMEOUT (*C++ enumerator*), 158
ESP_BT_STATUS_HCI_ENCRY_MODE_NOT_ACCEPTABLE (*C++ enumerator*), 158
ESP_BT_STATUS_HCI_HOST_BUSY_PAIRING (*C++ enumerator*), 158
ESP_BT_STATUS_HCI_HOST_REJECT_DEVICE (*C++ enumerator*), 157
ESP_BT_STATUS_HCI_HOST_REJECT_RESOURCES (*C++ enumerator*), 157
ESP_BT_STATUS_HCI_HOST_REJECT_SECURITY (*C++ enumerator*), 157
ESP_BT_STATUS_HCI_HOST_TIMEOUT (*C++ enumerator*), 157
ESP_BT_STATUS_HCI_HW_FAILURE (*C++ enumerator*), 157
ESP_BT_STATUS_HCI_ILLEGAL_COMMAND (*C++ enumerator*), 157
ESP_BT_STATUS_HCI_ILLEGAL_PARAMETER_FMT (*C++ enumerator*), 157
ESP_BT_STATUS_HCI_INQ_RSP_DATA_TOO_LARGE (*C++ enumerator*), 158
ESP_BT_STATUS_HCI_INSTANT_PASSED (*C++ enumerator*), 158
ESP_BT_STATUS_HCI_INSUFFCIENT_SECURITY (*C++ enumerator*), 158
ESP_BT_STATUS_HCI_INVALID_LMP_PARAM (*C++ enumerator*), 158
ESP_BT_STATUS_HCI_KEY_MISSING (*C++ enumerator*), 157
ESP_BT_STATUS_HCI_LMP_ERR_TRANS_COLLISION (*C++ enumerator*), 158
ESP_BT_STATUS_HCI_LMP_PDU_NOT_ALLOWED (*C++ enumerator*), 158
ESP_BT_STATUS_HCI_LMP_RESPONSE_TIMEOUT (*C++ enumerator*), 158
ESP_BT_STATUS_HCI_MAC_CONNECTION_FAILED (*C++ enumerator*), 158
ESP_BT_STATUS_HCI_MAX_NUM_OF_CONNECTIONS (*C++ enumerator*), 157
ESP_BT_STATUS_HCI_MAX_NUM_OF_SCOS (*C++ enumerator*), 157
ESP_BT_STATUS_HCI_MEMORY_FULL (*C++ enumerator*), 157
ESP_BT_STATUS_HCI_NO_CONNECTION (*C++ enumerator*), 157
ESP_BT_STATUS_HCI_PAGE_TIMEOUT (*C++ enumerator*), 157
ESP_BT_STATUS_HCI_PAIRING_NOT_ALLOWED (*C++ enumerator*), 157
ESP_BT_STATUS_HCI_PAIRING_WITH_UNIT_KEY_NOT_SUPPO (*C++ enumerator*), 158
ESP_BT_STATUS_HCI_PARAM_OUT_OF_RANGE (*C++ enumerator*), 158
ESP_BT_STATUS_HCI_PEER_LOW_RESOURCES (*C++ enumerator*), 157
ESP_BT_STATUS_HCI_PEER_POWER_OFF (*C++ enumerator*), 157
ESP_BT_STATUS_HCI_PEER_USER (*C++ enumerator*), 157
ESP_BT_STATUS_HCI_PENDING (*C++ enumerator*), 157
ESP_BT_STATUS_HCI_QOS_NOT_SUPPORTED (*C++ enumerator*), 158
ESP_BT_STATUS_HCI_QOS_REJECTED (*C++ enumerator*), 158
ESP_BT_STATUS_HCI_QOS_UNACCEPTABLE_PARAM (*C++ enumerator*), 158
ESP_BT_STATUS_HCI_REJ_NO_SUITABLE_CHANNEL (*C++ enumerator*), 158
ESP_BT_STATUS_HCI_REPEATED_ATTEMPTS (*C++ enumerator*), 157
ESP_BT_STATUS_HCI_RESERVED_SLOT_VIOLATION (*C++ enumerator*), 158
ESP_BT_STATUS_HCI_ROLE_CHANGE_NOT_ALLOWED (*C++ enumerator*), 158
ESP_BT_STATUS_HCI_ROLE_SWITCH_FAILED (*C++ enumerator*), 158
ESP_BT_STATUS_HCI_ROLE_SWITCH_PENDING (*C++ enumerator*), 158
ESP_BT_STATUS_HCI_SCO_AIR_MODE (*C++*

enumerator), 158
ESP_BT_STATUS_HCI_SCO_INTERVAL_REJECTED (*C++ enumerator*), 158
ESP_BT_STATUS_HCI_SCO_OFFSET_REJECTED (*C++ enumerator*), 158
ESP_BT_STATUS_HCI_SIMPLE_PAIRING_NOT_SUPPORTED (*C++ enumerator*), 158
ESP_BT_STATUS_HCI_SUCCESS (*C++ enumerator*), 157
ESP_BT_STATUS_HCI_UNACCEPT_CONN_INTERVAL (*C++ enumerator*), 158
ESP_BT_STATUS_HCI_UNDEFINED_0x2B (*C++ enumerator*), 158
ESP_BT_STATUS_HCI_UNDEFINED_0x31 (*C++ enumerator*), 158
ESP_BT_STATUS_HCI_UNDEFINED_0x33 (*C++ enumerator*), 158
ESP_BT_STATUS_HCI_UNIT_KEY_USED (*C++ enumerator*), 158
ESP_BT_STATUS_HCI_UNKNOWN_LMP_PDU (*C++ enumerator*), 157
ESP_BT_STATUS_HCI_UNSPECIFIED (*C++ enumerator*), 158
ESP_BT_STATUS_HCI_UNSUPPORTED_LMP_PARAMETERS (*C++ enumerator*), 158
ESP_BT_STATUS_HCI_UNSUPPORTED_REM_FEATURE (*C++ enumerator*), 158
ESP_BT_STATUS_HCI_UNSUPPORTED_VALUE (*C++ enumerator*), 157
ESP_BT_STATUS_INVALID_STATIC_RAND_ADDR (*C++ enumerator*), 157
ESP_BT_STATUS_MEMORY_FULL (*C++ enumerator*), 157
ESP_BT_STATUS_NOMEM (*C++ enumerator*), 156
ESP_BT_STATUS_NOT_READY (*C++ enumerator*), 156
ESP_BT_STATUS_PARAM_OUT_OF_RANGE (*C++ enumerator*), 157
ESP_BT_STATUS_PARM_INVALID (*C++ enumerator*), 156
ESP_BT_STATUS_PEER_LE_DATA_LEN_UNSUPPORTED (*C++ enumerator*), 157
ESP_BT_STATUS_PENDING (*C++ enumerator*), 157
ESP_BT_STATUS_RMT_DEV_DOWN (*C++ enumerator*), 157
ESP_BT_STATUS_SUCCESS (*C++ enumerator*), 156
esp_bt_status_t (*C++ enum*), 156
ESP_BT_STATUS_TIMEOUT (*C++ enumerator*), 157
ESP_BT_STATUS_UNACCEPT_CONN_INTERVAL (*C++ enumerator*), 157
ESP_BT_STATUS_UNHANDLED (*C++ enumerator*), 156
ESP_BT_STATUS_UNSUPPORTED (*C++ enumerator*), 156
esp_bt_uuid_t (*C++ class*), 155
esp_bt_uuid_t::len (*C++ member*), 155
esp_bt_uuid_t::uuid (*C++ member*), 155
esp_bt_uuid_t::uuid128 (*C++ member*), 155
esp_bt_uuid_t::uuid16 (*C++ member*), 155
esp_bt_uuid_t::uuid32 (*C++ member*), 155
ESP_CHIP_ID_ESP32 (*C++ enumerator*), 1119
ESP_CHIP_ID_ESP32C3 (*C++ enumerator*), 1119
ESP_CHIP_ID_ESP32S2 (*C++ enumerator*), 1119
ESP_CHIP_ID_ESP32S3 (*C++ enumerator*), 1119
ESP_CHIP_ID_INVALID (*C++ enumerator*), 1119
esp_chip_id_t (*C++ enum*), 1119
esp_chip_info (*C++ function*), 1327
esp_chip_info_t (*C++ class*), 1327
esp_chip_info_t::cores (*C++ member*), 1328
esp_chip_info_t::features (*C++ member*), 1328
esp_chip_info_t::full_revision (*C++ member*), 1328
esp_chip_info_t::model (*C++ member*), 1328
esp_chip_info_t::revision (*C++ member*), 1328
esp_chip_model_t (*C++ enum*), 1329
esp_console_cmd_func_t (*C++ type*), 1134
esp_console_cmd_register (*C++ function*), 1131
esp_console_cmd_t (*C++ class*), 1134
esp_console_cmd_t::argtable (*C++ member*), 1134
esp_console_cmd_t::command (*C++ member*), 1134
esp_console_cmd_t::func (*C++ member*), 1134
esp_console_cmd_t::help (*C++ member*), 1134
esp_console_cmd_t::hint (*C++ member*), 1134
ESP_CONSOLE_CONFIG_DEFAULT (*C 宏*), 1134
esp_console_config_t (*C++ class*), 1133
esp_console_config_t::hint_bold (*C++ member*), 1133
esp_console_config_t::hint_color (*C++ member*), 1133
esp_console_config_t::max_cmdline_args (*C++ member*), 1133
esp_console_config_t::max_cmdline_length (*C++ member*), 1133
esp_console_deinit (*C++ function*), 1130
ESP_CONSOLE_DEV_CDC_CONFIG_DEFAULT (*C 宏*), 1134
ESP_CONSOLE_DEV_UART_CONFIG_DEFAULT (*C 宏*), 1134
esp_console_dev_uart_config_t (*C++ class*), 1133
esp_console_dev_uart_config_t::baud_rate (*C++ member*), 1133
esp_console_dev_uart_config_t::channel (*C++ member*), 1133
esp_console_dev_uart_config_t::rx_gpio_num (*C++ member*), 1133
esp_console_dev_uart_config_t::tx_gpio_num (*C++ member*), 1133

esp_console_dev_usb_cdc_config_t (C++ class), 1134
esp_console_get_completion (C++ function), 1131
esp_console_get_hint (C++ function), 1131
esp_console_init (C++ function), 1130
esp_console_new_repl_uart (C++ function), 1132
esp_console_new_repl_usb_cdc (C++ function), 1132
esp_console_register_help_command (C++ function), 1132
ESP_CONSOLE_REPL_CONFIG_DEFAULT (C 宏), 1134
esp_console_repl_config_t (C++ class), 1133
esp_console_repl_config_t::history_save_path (C++ member), 1133
esp_console_repl_config_t::max_history_len (C++ member), 1133
esp_console_repl_config_t::prompt (C++ member), 1133
esp_console_repl_config_t::task_priority (C++ member), 1133
esp_console_repl_config_t::task_stack_size (C++ member), 1133
esp_console_repl_s (C++ class), 1134
esp_console_repl_s::del (C++ member), 1134
esp_console_repl_t (C++ type), 1135
esp_console_run (C++ function), 1131
esp_console_split_argv (C++ function), 1131
esp_console_start_repl (C++ function), 1132
esp_crt_bundle_attach (C++ function), 1003
esp_crt_bundle_detach (C++ function), 1003
esp_crt_bundle_set (C++ function), 1003
esp_deep_sleep (C++ function), 1353
esp_deep_sleep_disable_rom_logging (C++ function), 1354
esp_deep_sleep_start (C++ function), 1353
esp_deep_sleep_wake_stub_fn_t (C++ type), 1354
ESP_DEFAULT_GATT_IF (C 宏), 155
esp_default_wake_deep_sleep (C++ function), 1354
esp_deregister_freertos_idle_hook (C++ function), 1280
esp_deregister_freertos_idle_hook_for_cpu (C++ function), 1280
esp_deregister_freertos_tick_hook (C++ function), 1280
esp_deregister_freertos_tick_hook_for_cpu (C++ function), 1280
esp_derive_local_mac (C++ function), 1327
ESP_DRAM_LOGD (C 宏), 1322
ESP_DRAM_LOGE (C 宏), 1322
ESP_DRAM_LOGI (C 宏), 1322
ESP_DRAM_LOGV (C 宏), 1322
ESP_DRAM_LOGW (C 宏), 1322
esp_duplicate_info_t (C++ type), 198
esp_duplicate_scan_exceptional_list_type_t (C++ enum), 205
ESP_EARLY_LOGD (C 宏), 1321
ESP_EARLY_LOGE (C 宏), 1321
ESP_EARLY_LOGI (C 宏), 1321
ESP_EARLY_LOGV (C 宏), 1321
ESP_EARLY_LOGW (C 宏), 1321
esp_efuse_batch_write_begin (C++ function), 1146
esp_efuse_batch_write_cancel (C++ function), 1147
esp_efuse_batch_write_commit (C++ function), 1147
esp_efuse_burn_new_values (C++ function), 1145
esp_efuse_check_errors (C++ function), 1147
esp_efuse_check_secure_version (C++ function), 1145
esp_efuse_desc_t (C++ class), 1147
esp_efuse_desc_t::bit_count (C++ member), 1147
esp_efuse_desc_t::bit_start (C++ member), 1147
esp_efuse_desc_t::efuse_block (C++ member), 1147
esp_efuse_disable_basic_rom_console (C++ function), 1145
esp_efuse_disable_rom_download_mode (C++ function), 1145
esp_efuse_get_coding_scheme (C++ function), 1144
esp_efuse_get_field_size (C++ function), 1143
esp_efuse_get_pkg_ver (C++ function), 1144
esp_efuse_init (C++ function), 1146
esp_efuse_mac_get_custom (C++ function), 1327
esp_efuse_mac_get_default (C++ function), 1327
esp_efuse_read_block (C++ function), 1144
esp_efuse_read_field_bit (C++ function), 1142
esp_efuse_read_field_blob (C++ function), 1142
esp_efuse_read_field_cnt (C++ function), 1142
esp_efuse_read_reg (C++ function), 1143
esp_efuse_read_secure_version (C++ function), 1145
esp_efuse_reset (C++ function), 1145
esp_efuse_set_read_protect (C++ function), 1143
esp_efuse_set_write_protect (C++ function), 1143
esp_efuse_update_secure_version (C++ function), 1146

esp_efuse_write_block (*C++ function*), 1144
esp_efuse_write_field_bit (*C++ function*), 1143
esp_efuse_write_field_blob (*C++ function*), 1142
esp_efuse_write_field_cnt (*C++ function*), 1142
esp_efuse_write_random_key (*C++ function*), 1145
esp_efuse_write_reg (*C++ function*), 1144
ESP_ERR_CODING (*C 宏*), 1148
ESP_ERR_DPP_FAILURE (*C 宏*), 627
ESP_ERR_DPP_INVALID_ATTR (*C 宏*), 627
ESP_ERR_DPP_TX_FAILURE (*C 宏*), 627
ESP_ERR_EFUSE (*C 宏*), 1147
ESP_ERR_EFUSE_CNT_IS_FULL (*C 宏*), 1147
ESP_ERR_EFUSE_REPEATED_PROG (*C 宏*), 1148
ESP_ERR_ESP_TLS_BASE (*C 宏*), 910
ESP_ERR_ESP_TLS_CANNOT_CREATE_SOCKET (*C 宏*), 910
ESP_ERR_ESP_TLS_CANNOT_RESOLVE_HOSTNAME (*C 宏*), 910
ESP_ERR_ESP_TLS_CONNECTION_TIMEOUT (*C 宏*), 911
ESP_ERR_ESP_TLS_FAILED_CONNECT_TO_HOST (*C 宏*), 910
ESP_ERR_ESP_TLS_SE_FAILED (*C 宏*), 911
ESP_ERR_ESP_TLS_SOCKET_SETOPT_FAILED (*C 宏*), 910
ESP_ERR_ESP_TLS_UNSUPPORTED_PROTOCOL_FAMILY (*C 宏*), 910
ESP_ERR_ESPNOW_ARG (*C 宏*), 593
ESP_ERR_ESPNOW_BASE (*C 宏*), 593
ESP_ERR_ESPNOW_EXIST (*C 宏*), 593
ESP_ERR_ESPNOW_FULL (*C 宏*), 593
ESP_ERR_ESPNOW_IF (*C 宏*), 593
ESP_ERR_ESPNOW_INTERNAL (*C 宏*), 593
ESP_ERR_ESPNOW_NO_MEM (*C 宏*), 593
ESP_ERR_ESPNOW_NOT_FOUND (*C 宏*), 593
ESP_ERR_ESPNOW_NOT_INIT (*C 宏*), 593
ESP_ERR_FLASH_BASE (*C 宏*), 1149
ESP_ERR_HTTP_BASE (*C 宏*), 923
ESP_ERR_HTTP_CONNECT (*C 宏*), 923
ESP_ERR_HTTP_CONNECTING (*C 宏*), 923
ESP_ERR_HTTP_EAGAIN (*C 宏*), 923
ESP_ERR_HTTP_FETCH_HEADER (*C 宏*), 923
ESP_ERR_HTTP_INVALID_TRANSPORT (*C 宏*), 923
ESP_ERR_HTTP_MAX_REDIRECT (*C 宏*), 923
ESP_ERR_HTTP_WRITE_DATA (*C 宏*), 923
ESP_ERR_HTTPD_ALLOC_MEM (*C 宏*), 951
ESP_ERR_HTTPD_BASE (*C 宏*), 951
ESP_ERR_HTTPD_HANDLER_EXISTS (*C 宏*), 951
ESP_ERR_HTTPD_HANDLERS_FULL (*C 宏*), 951
ESP_ERR_HTTPD_INVALID_REQ (*C 宏*), 951
ESP_ERR_HTTPD_RESP_HDR (*C 宏*), 951
ESP_ERR_HTTPD_RESP_SEND (*C 宏*), 951
ESP_ERR_HTTPD_RESULT_TRUNC (*C 宏*), 951
ESP_ERR_HTTPD_TASK (*C 宏*), 951
ESP_ERR_HTTPS_OTA_BASE (*C 宏*), 1152
ESP_ERR_HTTPS_OTA_IN_PROGRESS (*C 宏*), 1152
ESP_ERR_HW_CRYPTO_BASE (*C 宏*), 1149
ESP_ERR_INVALID_ARG (*C 宏*), 1149
ESP_ERR_INVALID_CRC (*C 宏*), 1149
ESP_ERR_INVALID_MAC (*C 宏*), 1149
ESP_ERR_INVALID_RESPONSE (*C 宏*), 1149
ESP_ERR_INVALID_SIZE (*C 宏*), 1149
ESP_ERR_INVALID_STATE (*C 宏*), 1149
ESP_ERR_INVALID_VERSION (*C 宏*), 1149
ESP_ERR_MBEDTLS_CERT_PARTLY_OK (*C 宏*), 910
ESP_ERR_MBEDTLS_CTR_DRBG_SEED_FAILED (*C 宏*), 910
ESP_ERR_MBEDTLS_PK_PARSE_KEY_FAILED (*C 宏*), 910
ESP_ERR_MBEDTLS_SSL_CONF_ALPN_PROTOCOLS_FAILED (*C 宏*), 910
ESP_ERR_MBEDTLS_SSL_CONF_OWN_CERT_FAILED (*C 宏*), 910
ESP_ERR_MBEDTLS_SSL_CONF_PSK_FAILED (*C 宏*), 911
ESP_ERR_MBEDTLS_SSL_CONFIG_DEFAULTS_FAILED (*C 宏*), 910
ESP_ERR_MBEDTLS_SSL_HANDSHAKE_FAILED (*C 宏*), 911
ESP_ERR_MBEDTLS_SSL_SET_HOSTNAME_FAILED (*C 宏*), 910
ESP_ERR_MBEDTLS_SSL_SETUP_FAILED (*C 宏*), 910
ESP_ERR_MBEDTLS_SSL_WRITE_FAILED (*C 宏*), 910
ESP_ERR_MBEDTLS_X509_CRT_PARSE_FAILED (*C 宏*), 910
ESP_ERR_MESH_ARGUMENT (*C 宏*), 621
ESP_ERR_MESH_BASE (*C 宏*), 1149
ESP_ERR_MESH_DISCARD (*C 宏*), 621
ESP_ERR_MESH_DISCARD_DUPLICATE (*C 宏*), 621
ESP_ERR_MESH_DISCONNECTED (*C 宏*), 621
ESP_ERR_MESH_EXCEED_MTU (*C 宏*), 621
ESP_ERR_MESH_INTERFACE (*C 宏*), 621
ESP_ERR_MESH_NO_MEMORY (*C 宏*), 621
ESP_ERR_MESH_NO_PARENT_FOUND (*C 宏*), 621
ESP_ERR_MESH_NO_ROUTE_FOUND (*C 宏*), 621
ESP_ERR_MESH_NOT_ALLOWED (*C 宏*), 620
ESP_ERR_MESH_NOT_CONFIG (*C 宏*), 620
ESP_ERR_MESH_NOT_INIT (*C 宏*), 620
ESP_ERR_MESH_NOT_START (*C 宏*), 620
ESP_ERR_MESH_NOT_SUPPORT (*C 宏*), 620
ESP_ERR_MESH_OPTION_NULL (*C 宏*), 621
ESP_ERR_MESH_OPTION_UNKNOWN (*C 宏*), 621
ESP_ERR_MESH_PS (*C 宏*), 621
ESP_ERR_MESH_QUEUE_FAIL (*C 宏*), 621
ESP_ERR_MESH_QUEUE_FULL (*C 宏*), 621
ESP_ERR_MESH_QUEUE_READ (*C 宏*), 621

ESP_ERR_MESH_RECV_RELEASE (*C 宏*), 621
ESP_ERR_MESH_TIMEOUT (*C 宏*), 621
ESP_ERR_MESH_VOTING (*C 宏*), 621
ESP_ERR_MESH_WIFI_NOT_START (*C 宏*), 620
ESP_ERR_MESH_XMIT (*C 宏*), 621
ESP_ERR_MESH_XON_NO_WINDOW (*C 宏*), 621
ESP_ERR_NO_MEM (*C 宏*), 1148
ESP_ERR_NOT_ENOUGH_UNUSED_KEY_BLOCKS (*C 宏*), 1148
ESP_ERR_NOT_FINISHED (*C 宏*), 996
ESP_ERR_NOT_FOUND (*C 宏*), 1149
ESP_ERR_NOT_SUPPORTED (*C 宏*), 1149
ESP_ERR_NVS_BASE (*C 宏*), 1082
ESP_ERR_NVS_CONTENT_DIFFERS (*C 宏*), 1083
ESP_ERR_NVS_CORRUPT_KEY_PART (*C 宏*), 1083
ESP_ERR_NVS_ENCR_NOT_SUPPORTED (*C 宏*), 1082
ESP_ERR_NVS_INVALID_HANDLE (*C 宏*), 1082
ESP_ERR_NVS_INVALID_LENGTH (*C 宏*), 1082
ESP_ERR_NVS_INVALID_NAME (*C 宏*), 1082
ESP_ERR_NVS_INVALID_STATE (*C 宏*), 1082
ESP_ERR_NVS_KEY_TOO_LONG (*C 宏*), 1082
ESP_ERR_NVS_KEYS_NOT_INITIALIZED (*C 宏*), 1082
ESP_ERR_NVS_NEW_VERSION_FOUND (*C 宏*), 1082
ESP_ERR_NVS_NO_FREE_PAGES (*C 宏*), 1082
ESP_ERR_NVS_NOT_ENOUGH_SPACE (*C 宏*), 1082
ESP_ERR_NVS_NOT_FOUND (*C 宏*), 1082
ESP_ERR_NVS_NOT_INITIALIZED (*C 宏*), 1082
ESP_ERR_NVS_PAGE_FULL (*C 宏*), 1082
ESP_ERR_NVS_PART_NOT_FOUND (*C 宏*), 1082
ESP_ERR_NVS_READ_ONLY (*C 宏*), 1082
ESP_ERR_NVS_REMOVE_FAILED (*C 宏*), 1082
ESP_ERR_NVS_TYPE_MISMATCH (*C 宏*), 1082
ESP_ERR_NVS_VALUE_TOO_LONG (*C 宏*), 1082
ESP_ERR_NVS_WRONG_ENCRYPTION (*C 宏*), 1083
ESP_ERR_NVS_XTS_CFG_FAILED (*C 宏*), 1082
ESP_ERR_NVS_XTS_CFG_NOT_FOUND (*C 宏*), 1082
ESP_ERR_NVS_XTS_DECR_FAILED (*C 宏*), 1082
ESP_ERR_NVS_XTS_ENCR_FAILED (*C 宏*), 1082
ESP_ERR_OTA_BASE (*C 宏*), 1339
ESP_ERR_OTA_PARTITION_CONFLICT (*C 宏*), 1339
ESP_ERR_OTA_ROLLBACK_FAILED (*C 宏*), 1339
ESP_ERR_OTA_ROLLBACK_INVALID_STATE (*C 宏*), 1339
ESP_ERR_OTA_SELECT_INFO_INVALID (*C 宏*), 1339
ESP_ERR_OTA_SMALL_SEC_VER (*C 宏*), 1339
ESP_ERR_OTA_VALIDATE_FAILED (*C 宏*), 1339
ESP_ERR_SLEEP_REJECT (*C++ enumerator*), 1356
ESP_ERR_SLEEP_TOO_SHORT_SLEEP_DURATION (*C++ enumerator*), 1356
esp_err_t (*C++ type*), 1149
ESP_ERR_TIMEOUT (*C 宏*), 1149
esp_err_to_name (*C++ function*), 1148
esp_err_to_name_r (*C++ function*), 1148
ESP_ERR_ULP_BASE (*C 宏*), 1880
ESP_ERR_ULP_BRANCH_OUT_OF_RANGE (*C 宏*), 1880
ESP_ERR_ULP_DUPLICATE_LABEL (*C 宏*), 1880
ESP_ERR_ULP_INVALID_LOAD_ADDR (*C 宏*), 1880
ESP_ERR_ULP_SIZE_TOO_BIG (*C 宏*), 1880
ESP_ERR_ULP_UNDEFINED_LABEL (*C 宏*), 1880
ESP_ERR_WIFI_BASE (*C 宏*), 1149
ESP_ERR_WIFI_CONN (*C 宏*), 561
ESP_ERR_WIFI_DISCARD (*C 宏*), 561
ESP_ERR_WIFI_IF (*C 宏*), 561
ESP_ERR_WIFI_INIT_STATE (*C 宏*), 561
ESP_ERR_WIFI_MAC (*C 宏*), 561
ESP_ERR_WIFI_MODE (*C 宏*), 561
ESP_ERR_WIFI_NOT_ASSOC (*C 宏*), 561
ESP_ERR_WIFI_NOT_CONNECT (*C 宏*), 561
ESP_ERR_WIFI_NOT_INIT (*C 宏*), 560
ESP_ERR_WIFI_NOT_STARTED (*C 宏*), 561
ESP_ERR_WIFI_NOT_STOPPED (*C 宏*), 561
ESP_ERR_WIFI_NVS (*C 宏*), 561
ESP_ERR_WIFI_PASSWORD (*C 宏*), 561
ESP_ERR_WIFI_POST (*C 宏*), 561
ESP_ERR_WIFI_SSID (*C 宏*), 561
ESP_ERR_WIFI_STATE (*C 宏*), 561
ESP_ERR_WIFI_STOP_STATE (*C 宏*), 561
ESP_ERR_WIFI_TIMEOUT (*C 宏*), 561
ESP_ERR_WIFI_TX_DISALLOW (*C 宏*), 561
ESP_ERR_WIFI_WAKE_FAIL (*C 宏*), 561
ESP_ERR_WIFI_WOULD_BLOCK (*C 宏*), 561
ESP_ERR_WOLFSSL_CERT_VERIFY_SETUP_FAILED (*C 宏*), 911
ESP_ERR_WOLFSSL_CTX_SETUP_FAILED (*C 宏*), 911
ESP_ERR_WOLFSSL_KEY_VERIFY_SETUP_FAILED (*C 宏*), 911
ESP_ERR_WOLFSSL_SSL_CONF_ALPN_PROTOCOLS_FAILED (*C 宏*), 911
ESP_ERR_WOLFSSL_SSL_HANDSHAKE_FAILED (*C 宏*), 911
ESP_ERR_WOLFSSL_SSL_SET_HOSTNAME_FAILED (*C 宏*), 911
ESP_ERR_WOLFSSL_SSL_SETUP_FAILED (*C 宏*), 911
ESP_ERR_WOLFSSL_SSL_WRITE_FAILED (*C 宏*), 911
ESP_ERROR_CHECK (*C 宏*), 1149
ESP_ERROR_CHECK_WITHOUT_ABORT (*C 宏*), 1149
esp_esptouch_set_timeout (*C++ function*), 586
esp_eth_clear_default_handlers (*C++ function*), 643
esp_eth_config_t (*C++ class*), 631
esp_eth_config_t::check_link_period_ms (*C++ member*), 631
esp_eth_config_t::mac (*C++ member*), 631

esp_eth_config_t::on_lowlevel_deinit_done (C++ member), 632
esp_eth_config_t::on_lowlevel_init_done (C++ member), 631
esp_eth_config_t::phy (C++ member), 631
esp_eth_config_t::stack_input (C++ member), 631
esp_eth_decrease_reference (C++ function), 631
esp_eth_del_netif_glue (C++ function), 643
esp_eth_detect_phy_addr (C++ function), 632
esp_eth_driver_install (C++ function), 629
esp_eth_driver_uninstall (C++ function), 629
esp_eth_handle_t (C++ type), 632
esp_eth_increase_reference (C++ function), 631
esp_eth_io_cmd_t (C++ enum), 634
esp_eth_ioctl (C++ function), 630
esp_eth_mac_new_esp32 (C++ function), 635
esp_eth_mac_s (C++ class), 635
esp_eth_mac_s::deinit (C++ member), 636
esp_eth_mac_s::del (C++ member), 638
esp_eth_mac_s::enable_flow_ctrl (C++ member), 638
esp_eth_mac_s::get_addr (C++ member), 637
esp_eth_mac_s::init (C++ member), 636
esp_eth_mac_s::read_phy_reg (C++ member), 637
esp_eth_mac_s::receive (C++ member), 636
esp_eth_mac_s::set_addr (C++ member), 637
esp_eth_mac_s::set_duplex (C++ member), 638
esp_eth_mac_s::set_link (C++ member), 638
esp_eth_mac_s::set_mediator (C++ member), 635
esp_eth_mac_s::set_peer_pause_ability (C++ member), 638
esp_eth_mac_s::set_promiscuous (C++ member), 638
esp_eth_mac_s::set_speed (C++ member), 637
esp_eth_mac_s::start (C++ member), 636
esp_eth_mac_s::stop (C++ member), 636
esp_eth_mac_s::transmit (C++ member), 636
esp_eth_mac_s::write_phy_reg (C++ member), 637
esp_eth_mac_t (C++ type), 639
esp_eth_mediator_s (C++ class), 632
esp_eth_mediator_s::on_state_changed (C++ member), 633
esp_eth_mediator_s::phy_reg_read (C++ member), 632
esp_eth_mediator_s::phy_reg_write (C++ member), 633
esp_eth_mediator_s::stack_input (C++ member), 633
esp_eth_mediator_t (C++ type), 633
esp_eth_new_netif_glue (C++ function), 643
ESP_ETH_PHY_ADDR_AUTO (C 宏), 642
esp_eth_phy_new_dp83848 (C++ function), 640
esp_eth_phy_new_ip101 (C++ function), 639
esp_eth_phy_new_ksz8041 (C++ function), 640
esp_eth_phy_new_lan8720 (C++ function), 640
esp_eth_phy_new_rtl8201 (C++ function), 639
esp_eth_phy_s (C++ class), 640
esp_eth_phy_s::advertise_pause_ability (C++ member), 642
esp_eth_phy_s::deinit (C++ member), 641
esp_eth_phy_s::del (C++ member), 642
esp_eth_phy_s::get_addr (C++ member), 641
esp_eth_phy_s::get_link (C++ member), 641
esp_eth_phy_s::init (C++ member), 641
esp_eth_phy_s::negotiate (C++ member), 641
esp_eth_phy_s::pwrctl (C++ member), 641
esp_eth_phy_s::reset (C++ member), 640
esp_eth_phy_s::reset_hw (C++ member), 640
esp_eth_phy_s::set_addr (C++ member), 641
esp_eth_phy_s::set_mediator (C++ member), 640
esp_eth_phy_t (C++ type), 642
esp_eth_receive (C++ function), 630
esp_eth_set_default_handlers (C++ function), 643
esp_eth_start (C++ function), 629
esp_eth_state_t (C++ enum), 634
esp_eth_stop (C++ function), 629
esp_eth_transmit (C++ function), 630
esp_eth_update_input_path (C++ function), 630
ESP_EVENT_ANY_BASE (C 宏), 1166
ESP_EVENT_ANY_ID (C 宏), 1166
esp_event_base_t (C++ type), 1166
ESP_EVENT_DECLARE_BASE (C 宏), 1166
ESP_EVENT_DEFINE_BASE (C 宏), 1166
esp_event_dump (C++ function), 1165
esp_event_handler_instance_register (C++ function), 1161
esp_event_handler_instance_register_with (C++ function), 1160
esp_event_handler_instance_t (C++ type), 1166
esp_event_handler_instance_unregister (C++ function), 1163
esp_event_handler_instance_unregister_with (C++ function), 1162
esp_event_handler_register (C++ function), 1159
esp_event_handler_register_with (C++ function), 1160
esp_event_handler_t (C++ type), 1166
esp_event_handler_unregister (C++ function), 1162
esp_event_handler_unregister_with (C++ function), 1162

esp_event_isr_post (C++ function), 1164
esp_event_isr_post_to (C++ function), 1164
esp_event_loop_args_t (C++ class), 1165
esp_event_loop_args_t::queue_size (C++ member), 1165
esp_event_loop_args_t::task_core_id (C++ member), 1166
esp_event_loop_args_t::task_name (C++ member), 1165
esp_event_loop_args_t::task_priority (C++ member), 1165
esp_event_loop_args_t::task_stack_size (C++ member), 1165
esp_event_loop_create (C++ function), 1158
esp_event_loop_create_default (C++ function), 1159
esp_event_loop_delete (C++ function), 1159
esp_event_loop_delete_default (C++ function), 1159
esp_event_loop_handle_t (C++ type), 1166
esp_event_loop_init (C++ function), 1167
esp_event_loop_run (C++ function), 1159
esp_event_loop_set_cb (C++ function), 1167
esp_event_post (C++ function), 1163
esp_event_post_to (C++ function), 1163
esp_event_process_default (C++ function), 1167
esp_event_send (C++ function), 1166
esp_event_send_internal (C++ function), 1167
esp_event_set_default_eth_handlers (C++ function), 1167
esp_event_set_default_wifi_handlers (C++ function), 1167
ESP_EXECUTE_EXPRESSION_WITH_STACK (C 宏), 1312
esp_execute_shared_stack_function (C++ function), 1312
ESP_EXT1_WAKEUP_ALL_LOW (C++ enumerator), 1355
ESP_EXT1_WAKEUP_ANY_HIGH (C++ enumerator), 1355
ESP_FAIL (C 宏), 1148
esp_fill_random (C++ function), 1326
ESP_FLASH_10MHZ (C++ enumerator), 1048
ESP_FLASH_20MHZ (C++ enumerator), 1048
ESP_FLASH_26MHZ (C++ enumerator), 1048
ESP_FLASH_40MHZ (C++ enumerator), 1048
ESP_FLASH_5MHZ (C++ enumerator), 1048
ESP_FLASH_80MHZ (C++ enumerator), 1048
esp_flash_chip_driver_initialized (C++ function), 1040
ESP_FLASH_ENC_MODE_DEVELOPMENT (C++ enumerator), 1056
ESP_FLASH_ENC_MODE_DISABLED (C++ enumerator), 1056
ESP_FLASH_ENC_MODE_RELEASE (C++ enumerator), 1056
esp_flash_enc_mode_t (C++ enum), 1056
esp_flash_encrypt_check_and_update (C++ function), 1055
esp_flash_encrypt_region (C++ function), 1055
esp_flash_encryption_enabled (C++ function), 1055
esp_flash_encryption_init_checks (C++ function), 1056
esp_flash_erase_chip (C++ function), 1040
esp_flash_erase_region (C++ function), 1040
esp_flash_get_chip_write_protect (C++ function), 1041
esp_flash_get_protectable_regions (C++ function), 1041
esp_flash_get_protected_region (C++ function), 1041
esp_flash_get_size (C++ function), 1040
esp_flash_init (C++ function), 1040
esp_flash_io_mode_t (C++ enum), 1048
esp_flash_is_quad_mode (C++ function), 1043
esp_flash_os_functions_t (C++ class), 1043
esp_flash_os_functions_t::check_yield (C++ member), 1044
esp_flash_os_functions_t::delay_us (C++ member), 1043
esp_flash_os_functions_t::end (C++ member), 1043
esp_flash_os_functions_t::get_system_time (C++ member), 1044
esp_flash_os_functions_t::get_temp_buffer (C++ member), 1043
esp_flash_os_functions_t::region_protected (C++ member), 1043
esp_flash_os_functions_t::release_temp_buffer (C++ member), 1044
esp_flash_os_functions_t::start (C++ member), 1043
esp_flash_os_functions_t::yield (C++ member), 1044
esp_flash_read (C++ function), 1042
esp_flash_read_encrypted (C++ function), 1043
esp_flash_read_id (C++ function), 1040
esp_flash_region_t (C++ class), 1043
esp_flash_region_t::offset (C++ member), 1043
esp_flash_region_t::size (C++ member), 1043
esp_flash_set_chip_write_protect (C++ function), 1041
esp_flash_set_protected_region (C++ function), 1041
ESP_FLASH_SPEED_MAX (C++ enumerator), 1048
ESP_FLASH_SPEED_MIN (C 宏), 1047
esp_flash_speed_t (C++ enum), 1048
esp_flash_spi_device_config_t (C++ class), 1039

esp_flash_spi_device_config_t::cs_id (C++ member), 1039
esp_flash_spi_device_config_t::cs_io_num (C++ member), 1039
esp_flash_spi_device_config_t::host_id (C++ member), 1039
esp_flash_spi_device_config_t::input_delay_ns (C++ member), 1039
esp_flash_spi_device_config_t::io_mode (C++ member), 1039
esp_flash_spi_device_config_t::speed (C++ member), 1039
esp_flash_t (C++ class), 1044
esp_flash_t (C++ type), 1045
esp_flash_t::busy (C++ member), 1044
esp_flash_t::chip_drv (C++ member), 1044
esp_flash_t::chip_id (C++ member), 1044
esp_flash_t::host (C++ member), 1044
esp_flash_t::os_func (C++ member), 1044
esp_flash_t::os_func_data (C++ member), 1044
esp_flash_t::read_mode (C++ member), 1044
esp_flash_t::reserved_flags (C++ member), 1044
esp_flash_t::size (C++ member), 1044
esp_flash_write (C++ function), 1042
esp_flash_write_encrypted (C++ function), 1042
esp_flash_write_protect_crypt_cnt (C++ function), 1055
esp_freertos_idle_cb_t (C++ type), 1280
esp_freertos_tick_cb_t (C++ type), 1280
ESP_GAP_BLE_ADD_WHITELIST_COMPLETE_EVT (C 宏), 196
ESP_GAP_BLE_ADV_DATA_RAW_SET_COMPLETE_EVT (C++ enumerator), 199
ESP_GAP_BLE_ADV_DATA_SET_COMPLETE_EVT (C++ enumerator), 198
ESP_GAP_BLE_ADV_START_COMPLETE_EVT (C++ enumerator), 199
ESP_GAP_BLE_ADV_STOP_COMPLETE_EVT (C++ enumerator), 199
ESP_GAP_BLE_ADV_TERMINATED_EVT (C++ enumerator), 200
ESP_GAP_BLE_AUTH_CMPL_EVT (C++ enumerator), 199
esp_gap_ble_cb_event_t (C++ enum), 198
esp_gap_ble_cb_t (C++ type), 198
ESP_GAP_BLE_CHANNEL_SELETE_ALGORITHM_EVT (C++ enumerator), 200
esp_gap_ble_channels (C++ type), 198
ESP_GAP_BLE_CHANNELS_LEN (C 宏), 196
ESP_GAP_BLE_CLEAR_BOND_DEV_COMPLETE_EVT (C++ enumerator), 199
ESP_GAP_BLE_EVT_MAX (C++ enumerator), 200
ESP_GAP_BLE_EXT_ADV_DATA_SET_COMPLETE_EVT (C++ enumerator), 200
ESP_GAP_BLE_EXT_ADV_REPORT_EVT (C++ enumerator), 200
ESP_GAP_BLE_EXT_ADV_SET_CLEAR_COMPLETE_EVT (C++ enumerator), 200
ESP_GAP_BLE_EXT_ADV_SET_PARAMS_COMPLETE_EVT (C++ enumerator), 200
ESP_GAP_BLE_EXT_ADV_SET_RAND_ADDR_COMPLETE_EVT (C++ enumerator), 200
ESP_GAP_BLE_EXT_ADV_SET_REMOVE_COMPLETE_EVT (C++ enumerator), 200
ESP_GAP_BLE_EXT_ADV_START_COMPLETE_EVT (C++ enumerator), 200
ESP_GAP_BLE_EXT_ADV_STOP_COMPLETE_EVT (C++ enumerator), 200
ESP_GAP_BLE_EXT_SCAN_RSP_DATA_SET_COMPLETE_EVT (C++ enumerator), 200
ESP_GAP_BLE_EXT_SCAN_START_COMPLETE_EVT (C++ enumerator), 200
ESP_GAP_BLE_EXT_SCAN_STOP_COMPLETE_EVT (C++ enumerator), 200
ESP_GAP_BLE_GET_BOND_DEV_COMPLETE_EVT (C++ enumerator), 199
ESP_GAP_BLE_GET_DEV_NAME_COMPLETE_EVT (C++ enumerator), 200
ESP_GAP_BLE_KEY_EVT (C++ enumerator), 199
ESP_GAP_BLE_LOCAL_ER_EVT (C++ enumerator), 199
ESP_GAP_BLE_LOCAL_IR_EVT (C++ enumerator), 199
ESP_GAP_BLE_NC_REQ_EVT (C++ enumerator), 199
ESP_GAP_BLE_OOB_REQ_EVT (C++ enumerator), 199
ESP_GAP_BLE_PASSKEY_NOTIF_EVT (C++ enumerator), 199
ESP_GAP_BLE_PASSKEY_REQ_EVT (C++ enumerator), 199
ESP_GAP_BLE_PERIODIC_ADV_ADD_DEV_COMPLETE_EVT (C++ enumerator), 200
ESP_GAP_BLE_PERIODIC_ADV_CLEAR_DEV_COMPLETE_EVT (C++ enumerator), 200
ESP_GAP_BLE_PERIODIC_ADV_CREATE_SYNC_COMPLETE_EVT (C++ enumerator), 200
ESP_GAP_BLE_PERIODIC_ADV_DATA_SET_COMPLETE_EVT (C++ enumerator), 200
ESP_GAP_BLE_PERIODIC_ADV_REMOVE_DEV_COMPLETE_EVT (C++ enumerator), 200
ESP_GAP_BLE_PERIODIC_ADV_REPORT_EVT (C++ enumerator), 200
ESP_GAP_BLE_PERIODIC_ADV_SET_PARAMS_COMPLETE_EVT (C++ enumerator), 200
ESP_GAP_BLE_PERIODIC_ADV_START_COMPLETE_EVT (C++ enumerator), 200
ESP_GAP_BLE_PERIODIC_ADV_STOP_COMPLETE_EVT (C++ enumerator), 200
ESP_GAP_BLE_PERIODIC_ADV_SYNC_CANCEL_COMPLETE_EVT (C++ enumerator), 200
ESP_GAP_BLE_PERIODIC_ADV_SYNC_ESTAB_EVT (C++ enumerator), 200

ESP_GAP_BLE_PERIODIC_ADV_SYNC_LOST_EVT (C++ enumerator), 200
ESP_GAP_BLE_PERIODIC_ADV_SYNC_TERMINATE_COMPLETE_EVT (C++ enumerator), 200
ESP_GAP_BLE_PHY_UPDATE_COMPLETE_EVT (C++ enumerator), 200
ESP_GAP_BLE_PREFER_EXT_CONN_PARAMS_SET_COMPLETE_EVT (C++ enumerator), 200
ESP_GAP_BLE_READ_PHY_COMPLETE_EVT (C++ enumerator), 200
ESP_GAP_BLE_READ_RSSI_COMPLETE_EVT (C++ enumerator), 199
ESP_GAP_BLE_REMOVE_BOND_DEV_COMPLETE_EVT (C++ enumerator), 199
ESP_GAP_BLE_SCAN_PARAM_SET_COMPLETE_EVT (C++ enumerator), 199
ESP_GAP_BLE_SCAN_REQ_RECEIVED_EVT (C++ enumerator), 200
ESP_GAP_BLE_SCAN_RESULT_EVT (C++ enumerator), 199
ESP_GAP_BLE_SCAN_RSP_DATA_RAW_SET_COMPLETE_EVT (C++ enumerator), 199
ESP_GAP_BLE_SCAN_RSP_DATA_SET_COMPLETE_EVT (C++ enumerator), 198
ESP_GAP_BLE_SCAN_START_COMPLETE_EVT (C++ enumerator), 199
ESP_GAP_BLE_SCAN_STOP_COMPLETE_EVT (C++ enumerator), 199
ESP_GAP_BLE_SCAN_TIMEOUT_EVT (C++ enumerator), 200
ESP_GAP_BLE_SEC_REQ_EVT (C++ enumerator), 199
esp_gap_ble_set_authorization (C++ function), 167
esp_gap_ble_set_channels (C++ function), 167
ESP_GAP_BLE_SET_CHANNELS_EVT (C++ enumerator), 200
ESP_GAP_BLE_SET_EXT_SCAN_PARAMS_COMPLETE_EVT (C++ enumerator), 200
ESP_GAP_BLE_SET_LOCAL_PRIVACY_COMPLETE_EVT (C++ enumerator), 199
ESP_GAP_BLE_SET_PKT_LENGTH_COMPLETE_EVT (C++ enumerator), 199
ESP_GAP_BLE_SET_PREFERED_DEFAULT_PHY_COMPLETE_EVT (C++ enumerator), 200
ESP_GAP_BLE_SET_PREFERED_PHY_COMPLETE_EVT (C++ enumerator), 200
ESP_GAP_BLE_SET_STATIC_RAND_ADDR_EVT (C++ enumerator), 199
ESP_GAP_BLE_UPDATE_CONN_PARAMS_EVT (C++ enumerator), 199
ESP_GAP_BLE_UPDATE_DUPLICATE_EXCEPTIONAL_LIST_COMPLETE_EVT (C++ enumerator), 199
ESP_GAP_BLE_UPDATE_WHITELIST_COMPLETE_EVT (C++ enumerator), 199
esp_gap_conn_params_t (C++ class), 186
esp_gap_conn_params_t::interval (C++ member), 186
esp_gap_conn_params_t::latency (C++ member), 186
esp_gap_conn_params_t::timeout (C++ member), 186
ESP_GAP_SEARCH_DI_DISC_CMPL_EVT (C++ enumerator), 204
ESP_GAP_SEARCH_DISC_BLE_RES_EVT (C++ enumerator), 204
ESP_GAP_SEARCH_DISC_CMPL_EVT (C++ enumerator), 204
ESP_GAP_SEARCH_DISC_RES_EVT (C++ enumerator), 204
esp_gap_search_evt_t (C++ enum), 203
ESP_GAP_SEARCH_INQ_CMPL_EVT (C++ enumerator), 203
ESP_GAP_SEARCH_INQ_DISCARD_NUM_EVT (C++ enumerator), 204
ESP_GAP_SEARCH_INQ_RES_EVT (C++ enumerator), 203
ESP_GAP_SEARCH_SEARCH_CANCEL_CMPL_EVT (C++ enumerator), 204
ESP_GATT_ALREADY_OPEN (C++ enumerator), 214
ESP_GATT_APP_RSP (C++ enumerator), 214
ESP_GATT_ATTR_HANDLE_MAX (C 宏), 212
ESP_GATT_AUTH_FAIL (C++ enumerator), 214
ESP_GATT_AUTH_REQ_MITM (C++ enumerator), 215
ESP_GATT_AUTH_REQ_NO_MITM (C++ enumerator), 215
ESP_GATT_AUTH_REQ_NONE (C++ enumerator), 215
ESP_GATT_AUTH_REQ_SIGNED_MITM (C++ enumerator), 215
ESP_GATT_AUTH_REQ_SIGNED_NO_MITM (C++ enumerator), 215
esp_gatt_auth_req_t (C++ enum), 215
ESP_GATT_AUTO_RSP (C 宏), 212
ESP_GATT_BODY_SENSOR_LOCATION (C 宏), 211
ESP_GATT_BUSY (C++ enumerator), 213
ESP_GATT_CANCEL (C++ enumerator), 214
ESP_GATT_CCC_CFG_ERR (C++ enumerator), 214
ESP_GATT_CHAR_PROP_BIT_AUTH (C 宏), 212
ESP_GATT_CHAR_PROP_BIT_BROADCAST (C 宏), 212
ESP_GATT_CHAR_PROP_BIT_EXT_PROP (C 宏), 212
ESP_GATT_CHAR_PROP_BIT_INDICATE (C 宏), 212
ESP_GATT_CHAR_PROP_BIT_NOTIFY (C 宏), 212
ESP_GATT_CHAR_PROP_BIT_READ (C 宏), 212
ESP_GATT_CHAR_PROP_BIT_WRITE (C 宏), 212
ESP_GATT_CHAR_PROP_BIT_WRITE_NR (C 宏), 212
esp_gatt_char_prop_t (C++ type), 213
ESP_GATT_CMD_STARTED (C++ enumerator), 214
ESP_GATT_CONGESTED (C++ enumerator), 214
ESP_GATT_CONN_CONN_CANCEL (C++ enumera-

tor), 214
ESP_GATT_CONN_FAIL_ESTABLISH (C++ enumerator), 214
ESP_GATT_CONN_L2C_FAILURE (C++ enumerator), 214
ESP_GATT_CONN_LMP_TIMEOUT (C++ enumerator), 214
ESP_GATT_CONN_NONE (C++ enumerator), 214
esp_gatt_conn_params_t (C++ class), 207
esp_gatt_conn_params_t::interval (C++ member), 208
esp_gatt_conn_params_t::latency (C++ member), 208
esp_gatt_conn_params_t::timeout (C++ member), 208
esp_gatt_conn_reason_t (C++ enum), 214
ESP_GATT_CONN_TERMINATE_LOCAL_HOST (C++ enumerator), 214
ESP_GATT_CONN_TERMINATE_PEER_USER (C++ enumerator), 214
ESP_GATT_CONN_TIMEOUT (C++ enumerator), 214
ESP_GATT_CONN_UNKNOWN (C++ enumerator), 214
ESP_GATT_DB_ALL (C++ enumerator), 215
esp_gatt_db_attr_type_t (C++ enum), 215
ESP_GATT_DB_CHARACTERISTIC (C++ enumerator), 215
ESP_GATT_DB_DESCRIPTOR (C++ enumerator), 215
ESP_GATT_DB_FULL (C++ enumerator), 213
ESP_GATT_DB_INCLUDED_SERVICE (C++ enumerator), 215
ESP_GATT_DB_PRIMARY_SERVICE (C++ enumerator), 215
ESP_GATT_DB_SECONDARY_SERVICE (C++ enumerator), 215
ESP_GATT_DUP_REG (C++ enumerator), 214
ESP_GATT_ENCRYPED_MITM (C++ enumerator), 214
ESP_GATT_ENCRYPED_NO_MITM (C++ enumerator), 214
ESP_GATT_ERR_UNLIKELY (C++ enumerator), 213
ESP_GATT_ERROR (C++ enumerator), 214
ESP_GATT_HEART_RATE_CNTL_POINT (C 宏), 212
ESP_GATT_HEART_RATE_MEAS (C 宏), 211
esp_gatt_id_t (C++ class), 205
esp_gatt_id_t::inst_id (C++ member), 206
esp_gatt_id_t::uuid (C++ member), 206
ESP_GATT_IF_NONE (C 宏), 213
esp_gatt_if_t (C++ type), 213
ESP_GATT_ILLEGAL_HANDLE (C 宏), 212
ESP_GATT_ILLEGAL_PARAMETER (C++ enumerator), 214
ESP_GATT_ILLEGAL_UUID (C 宏), 212
ESP_GATT_INSUF_AUTHENTICATION (C++ enumerator), 213
ESP_GATT_INSUF_AUTHORIZATION (C++ enumerator), 213
ESP_GATT_INSUF_ENCRYPTION (C++ enumerator), 213
ESP_GATT_INSUF_KEY_SIZE (C++ enumerator), 213
ESP_GATT_INSUF_RESOURCE (C++ enumerator), 213
ESP_GATT_INTERNAL_ERROR (C++ enumerator), 213
ESP_GATT_INVALID_ATTR_LEN (C++ enumerator), 213
ESP_GATT_INVALID_CFG (C++ enumerator), 214
ESP_GATT_INVALID_HANDLE (C++ enumerator), 213
ESP_GATT_INVALID_OFFSET (C++ enumerator), 213
ESP_GATT_INVALID_PDU (C++ enumerator), 213
ESP_GATT_MAX_ATTR_LEN (C 宏), 212
ESP_GATT_MAX_READ_MULTI_HANDLES (C 宏), 212
ESP_GATT_MORE (C++ enumerator), 214
ESP_GATT_NO_RESOURCES (C++ enumerator), 213
ESP_GATT_NOT_ENCRYPTED (C++ enumerator), 214
ESP_GATT_NOT_FOUND (C++ enumerator), 213
ESP_GATT_NOT_LONG (C++ enumerator), 213
ESP_GATT_OK (C++ enumerator), 213
ESP_GATT_OUT_OF_RANGE (C++ enumerator), 214
ESP_GATT_PENDING (C++ enumerator), 214
ESP_GATT_PERM_ENCRYPT_KEY_SIZE (C 宏), 212
ESP_GATT_PERM_READ (C 宏), 212
ESP_GATT_PERM_READ_AUTHORIZATION (C 宏), 212
ESP_GATT_PERM_READ_ENC_MITM (C 宏), 212
ESP_GATT_PERM_READ_ENCRYPTED (C 宏), 212
esp_gatt_perm_t (C++ type), 213
ESP_GATT_PERM_WRITE (C 宏), 212
ESP_GATT_PERM_WRITE_AUTHORIZATION (C 宏), 212
ESP_GATT_PERM_WRITE_ENC_MITM (C 宏), 212
ESP_GATT_PERM_WRITE_ENCRYPTED (C 宏), 212
ESP_GATT_PERM_WRITE_SIGNED (C 宏), 212
ESP_GATT_PERM_WRITE_SIGNED_MITM (C 宏), 212
ESP_GATT_PRC_IN_PROGRESS (C++ enumerator), 214
ESP_GATT_PREP_WRITE_CANCEL (C 宏), 226
ESP_GATT_PREP_WRITE_CANCEL (C++ enumerator), 213
ESP_GATT_PREP_WRITE_EXEC (C 宏), 226
ESP_GATT_PREP_WRITE_EXEC (C++ enumerator), 213
esp_gatt_prep_write_type (C++ enum), 213
ESP_GATT_PREPARE_Q_FULL (C++ enumerator), 213
ESP_GATT_READ_NOT_PERMIT (C++ enumerator), 213
ESP_GATT_REQ_NOT_SUPPORTED (C++ enumera-

tor), 213
ESP_GATT_RSP_BY_APP (*C 宏*), 212
esp_gatt_rsp_t (*C++ union*), 205
esp_gatt_rsp_t::attr_value (*C++ member*), 205
esp_gatt_rsp_t::handle (*C++ member*), 205
ESP_GATT_SERVICE_FROM_NVS_FLASH (*C++ enumerator*), 215
ESP_GATT_SERVICE_FROM_REMOTE_DEVICE (*C++ enumerator*), 215
ESP_GATT_SERVICE_FROM_UNKNOWN (*C++ enumerator*), 215
ESP_GATT_SERVICE_STARTED (*C++ enumerator*), 214
esp_gatt_srvc_id_t (*C++ class*), 206
esp_gatt_srvc_id_t::id (*C++ member*), 206
esp_gatt_srvc_id_t::is_primary (*C++ member*), 206
ESP_GATT_STACK_RSP (*C++ enumerator*), 214
esp_gatt_status_t (*C++ enum*), 213
ESP_GATT_UNKNOWN_ERROR (*C++ enumerator*), 214
ESP_GATT_UNSUPPORT_GRP_TYPE (*C++ enumerator*), 213
ESP_GATT_UUID_ALERT_LEVEL (*C 宏*), 211
ESP_GATT_UUID_ALERT_NTF_SVC (*C 宏*), 210
ESP_GATT_UUID_ALERT_STATUS (*C 宏*), 211
ESP_GATT_UUID_Automation_IO_SVC (*C 宏*), 210
ESP_GATT_UUID_BATTERY_LEVEL (*C 宏*), 212
ESP_GATT_UUID_BATTERY_SERVICE_SVC (*C 宏*), 210
ESP_GATT_UUID_BLOOD_PRESSURE_SVC (*C 宏*), 210
ESP_GATT_UUID_BODY_COMPOSITION (*C 宏*), 210
ESP_GATT_UUID_BOND_MANAGEMENT_SVC (*C 宏*), 210
ESP_GATT_UUID_CHAR_AGG_FORMAT (*C 宏*), 210
ESP_GATT_UUID_CHAR_CLIENT_CONFIG (*C 宏*), 210
ESP_GATT_UUID_CHAR_DECLARE (*C 宏*), 210
ESP_GATT_UUID_CHAR_DESCRIPTION (*C 宏*), 210
ESP_GATT_UUID_CHAR_EXT_PROP (*C 宏*), 210
ESP_GATT_UUID_CHAR_PRESENT_FORMAT (*C 宏*), 210
ESP_GATT_UUID_CHAR_SRVR_CONFIG (*C 宏*), 210
ESP_GATT_UUID_CHAR_VALID_RANGE (*C 宏*), 210
ESP_GATT_UUID_CONT_GLUCOSE_MONITOR_SVC (*C 宏*), 210
ESP_GATT_UUID_CSC_FEATURE (*C 宏*), 212
ESP_GATT_UUID_CSC_MEASUREMENT (*C 宏*), 212
ESP_GATT_UUID_CURRENT_TIME (*C 宏*), 211
ESP_GATT_UUID_CURRENT_TIME_SVC (*C 宏*), 209
ESP_GATT_UUID_CYCLING_POWER_SVC (*C 宏*), 210
ESP_GATT_UUID_CYCLING_SPEED_CADENCE_SVC (*C 宏*), 210
ESP_GATT_UUID_DEVICE_INFO_SVC (*C 宏*), 210
ESP_GATT_UUID_ENV_SENSING_CONFIG_DESCR (*C 宏*), 210
ESP_GATT_UUID_ENV_SENSING_MEASUREMENT_DESCR (*C 宏*), 210
ESP_GATT_UUID_ENV_SENSING_TRIGGER_DESCR (*C 宏*), 210
ESP_GATT_UUID_ENVIRONMENTAL_SENSING_SVC (*C 宏*), 210
ESP_GATT_UUID_EXT_RPT_REF_DESCR (*C 宏*), 210
ESP_GATT_UUID_FW_VERSION_STR (*C 宏*), 211
ESP_GATT_UUID_GAP_CENTRAL_ADDR_RESOL (*C 宏*), 211
ESP_GATT_UUID_GAP_DEVICE_NAME (*C 宏*), 210
ESP_GATT_UUID_GAP_ICON (*C 宏*), 211
ESP_GATT_UUID_GAP_PREF_CONN_PARAM (*C 宏*), 211
ESP_GATT_UUID_GATT_SRV_CHGD (*C 宏*), 211
ESP_GATT_UUID_GLUCOSE_SVC (*C 宏*), 209
ESP_GATT_UUID_GM_CONTEXT (*C 宏*), 211
ESP_GATT_UUID_GM_CONTROL_POINT (*C 宏*), 211
ESP_GATT_UUID_GM_FEATURE (*C 宏*), 211
ESP_GATT_UUID_GM_MEASUREMENT (*C 宏*), 211
ESP_GATT_UUID_HEALTH_THERMOM_SVC (*C 宏*), 209
ESP_GATT_UUID_HEART_RATE_SVC (*C 宏*), 210
ESP_GATT_UUID_HID_BT_KB_INPUT (*C 宏*), 211
ESP_GATT_UUID_HID_BT_KB_OUTPUT (*C 宏*), 211
ESP_GATT_UUID_HID_BT_MOUSE_INPUT (*C 宏*), 211
ESP_GATT_UUID_HID_CONTROL_POINT (*C 宏*), 211
ESP_GATT_UUID_HID_INFORMATION (*C 宏*), 211
ESP_GATT_UUID_HID_PROTO_MODE (*C 宏*), 211
ESP_GATT_UUID_HID_REPORT (*C 宏*), 211
ESP_GATT_UUID_HID_REPORT_MAP (*C 宏*), 211
ESP_GATT_UUID_HID_SVC (*C 宏*), 210
ESP_GATT_UUID_HW_VERSION_STR (*C 宏*), 211
ESP_GATT_UUID_IEEE_DATA (*C 宏*), 211
ESP_GATT_UUID_IMMEDIATE_ALERT_SVC (*C 宏*), 209
ESP_GATT_UUID_INCLUDE_SERVICE (*C 宏*), 210
ESP_GATT_UUID_LINK_LOSS_SVC (*C 宏*), 209
ESP_GATT_UUID_LOCAL_TIME_INFO (*C 宏*), 211
ESP_GATT_UUID_LOCATION_AND_NAVIGATION_SVC (*C 宏*), 210
ESP_GATT_UUID_MANU_NAME (*C 宏*), 211
ESP_GATT_UUID_MODEL_NUMBER_STR (*C 宏*), 211
ESP_GATT_UUID_NEXT_DST_CHANGE_SVC (*C 宏*), 209

ESP_GATT_UUID_NUM_DIGITALS_DESCR (*C 宏*), 210
ESP_GATT_UUID_NW_STATUS (*C 宏*), 211
ESP_GATT_UUID_NW_TRIGGER (*C 宏*), 211
ESP_GATT_UUID_PHONE_ALERT_STATUS_SVC (*C 宏*), 210
ESP_GATT_UUID_PNP_ID (*C 宏*), 211
ESP_GATT_UUID_PRI_SERVICE (*C 宏*), 210
ESP_GATT_UUID_REF_TIME_INFO (*C 宏*), 211
ESP_GATT_UUID_REF_TIME_UPDATE_SVC (*C 宏*), 209
ESP_GATT_UUID_RINGER_CP (*C 宏*), 211
ESP_GATT_UUID_RINGER_SETTING (*C 宏*), 211
ESP_GATT_UUID_RPT_REF_DESCR (*C 宏*), 210
ESP_GATT_UUID_RSC_FEATURE (*C 宏*), 212
ESP_GATT_UUID_RSC_MEASUREMENT (*C 宏*), 212
ESP_GATT_UUID_RUNNING_SPEED_CADENCE_SVC (*C 宏*), 210
ESP_GATT_UUID_SC_CONTROL_POINT (*C 宏*), 212
ESP_GATT_UUID_SCAN_INT_WINDOW (*C 宏*), 212
ESP_GATT_UUID_SCAN_PARAMETERS_SVC (*C 宏*), 210
ESP_GATT_UUID_SCAN_REFRESH (*C 宏*), 212
ESP_GATT_UUID_SEC_SERVICE (*C 宏*), 210
ESP_GATT_UUID_SENSOR_LOCATION (*C 宏*), 212
ESP_GATT_UUID_SERIAL_NUMBER_STR (*C 宏*), 211
ESP_GATT_UUID_SW_VERSION_STR (*C 宏*), 211
ESP_GATT_UUID_SYSTEM_ID (*C 宏*), 211
ESP_GATT_UUID_TIME_TRIGGER_DESCR (*C 宏*), 210
ESP_GATT_UUID_TX_POWER_LEVEL (*C 宏*), 211
ESP_GATT_UUID_TX_POWER_SVC (*C 宏*), 209
ESP_GATT_UUID_USER_DATA_SVC (*C 宏*), 210
ESP_GATT_UUID_VALUE_TRIGGER_DESCR (*C 宏*), 210
ESP_GATT_UUID_WEIGHT_SCALE_SVC (*C 宏*), 210
esp_gatt_value_t (*C++ class*), 207
esp_gatt_value_t::auth_req (*C++ member*), 207
esp_gatt_value_t::handle (*C++ member*), 207
esp_gatt_value_t::len (*C++ member*), 207
esp_gatt_value_t::offset (*C++ member*), 207
esp_gatt_value_t::value (*C++ member*), 207
ESP_GATT_WRITE_NOT_PERMIT (*C++ enumerator*), 213
ESP_GATT_WRITE_TYPE_NO_RSP (*C++ enumerator*), 215
ESP_GATT_WRITE_TYPE_RSP (*C++ enumerator*), 215
esp_gatt_write_type_t (*C++ enum*), 215
ESP_GATT_WRONG_STATE (*C++ enumerator*), 213
ESP_GATTC_ACL_EVT (*C++ enumerator*), 242
ESP_GATTC_ADV_DATA_EVT (*C++ enumerator*), 243
ESP_GATTC_ADV_VSC_EVT (*C++ enumerator*), 243
ESP_GATTC_BTH_SCAN_CFG_EVT (*C++ enumerator*), 243
ESP_GATTC_BTH_SCAN_DIS_EVT (*C++ enumerator*), 243
ESP_GATTC_BTH_SCAN_ENB_EVT (*C++ enumerator*), 243
ESP_GATTC_BTH_SCAN_PARAM_EVT (*C++ enumerator*), 243
ESP_GATTC_BTH_SCAN_RD_EVT (*C++ enumerator*), 243
ESP_GATTC_BTH_SCAN_THR_EVT (*C++ enumerator*), 243
ESP_GATTC_CANCEL_OPEN_EVT (*C++ enumerator*), 242
esp_gattc_cb_event_t (*C++ enum*), 242
esp_gattc_cb_t (*C++ type*), 242
ESP_GATTC_CFG_MTU_EVT (*C++ enumerator*), 243
esp_gattc_char_elem_t (*C++ class*), 209
esp_gattc_char_elem_t::char_handle (*C++ member*), 209
esp_gattc_char_elem_t::properties (*C++ member*), 209
esp_gattc_char_elem_t::uuid (*C++ member*), 209
ESP_GATTC_CLOSE_EVT (*C++ enumerator*), 242
ESP_GATTC_CONGEST_EVT (*C++ enumerator*), 243
ESP_GATTC_CONNECT_EVT (*C++ enumerator*), 243
esp_gattc_db_elem_t (*C++ class*), 208
esp_gattc_db_elem_t::attribute_handle (*C++ member*), 208
esp_gattc_db_elem_t::end_handle (*C++ member*), 208
esp_gattc_db_elem_t::properties (*C++ member*), 208
esp_gattc_db_elem_t::start_handle (*C++ member*), 208
esp_gattc_db_elem_t::type (*C++ member*), 208
esp_gattc_db_elem_t::uuid (*C++ member*), 208
esp_gattc_descr_elem_t (*C++ class*), 209
esp_gattc_descr_elem_t::handle (*C++ member*), 209
esp_gattc_descr_elem_t::uuid (*C++ member*), 209
ESP_GATTC_DIS_SRVC_CMPL_EVT (*C++ enumerator*), 244
ESP_GATTC_DISCONNECT_EVT (*C++ enumerator*), 243
ESP_GATTC_ENC_CMPL_CB_EVT (*C++ enumerator*), 243
ESP_GATTC_EXEC_EVT (*C++ enumerator*), 242
ESP_GATTC_GET_ADDR_LIST_EVT (*C++ enumerator*), 244
esp_gattc_incl_svc_elem_t (*C++ class*), 209
esp_gattc_incl_svc_elem_t::handle

(*C++ member*), 209
esp_gattc_incl_svc_elem_t::incl_srvc_e_handle (*C++ member*), 209
esp_gattc_incl_svc_elem_t::incl_srvc_s_handle (*C++ member*), 209
esp_gattc_incl_svc_elem_t::uuid (*C++ member*), 209
ESP_GATTC_MULT_ADV_DATA_EVT (*C++ enumerator*), 243
ESP_GATTC_MULT_ADV_DIS_EVT (*C++ enumerator*), 243
ESP_GATTC_MULT_ADV_ENB_EVT (*C++ enumerator*), 243
ESP_GATTC_MULT_ADV_UPD_EVT (*C++ enumerator*), 243
esp_gattc_multi_t (*C++ class*), 208
esp_gattc_multi_t::handles (*C++ member*), 208
esp_gattc_multi_t::num_attr (*C++ member*), 208
ESP_GATTC_NOTIFY_EVT (*C++ enumerator*), 242
ESP_GATTC_OPEN_EVT (*C++ enumerator*), 242
ESP_GATTC_PREP_WRITE_EVT (*C++ enumerator*), 242
ESP_GATTC_QUEUE_FULL_EVT (*C++ enumerator*), 244
ESP_GATTC_READ_CHAR_EVT (*C++ enumerator*), 242
ESP_GATTC_READ_DESCR_EVT (*C++ enumerator*), 242
ESP_GATTC_READ_MULTIPLE_EVT (*C++ enumerator*), 244
ESP_GATTC_REG_EVT (*C++ enumerator*), 242
ESP_GATTC_REG_FOR_NOTIFY_EVT (*C++ enumerator*), 243
ESP_GATTC_SCAN_FLT_CFG_EVT (*C++ enumerator*), 243
ESP_GATTC_SCAN_FLT_PARAM_EVT (*C++ enumerator*), 243
ESP_GATTC_SCAN_FLT_STATUS_EVT (*C++ enumerator*), 243
ESP_GATTC_SEARCH_CMPL_EVT (*C++ enumerator*), 242
ESP_GATTC_SEARCH_RES_EVT (*C++ enumerator*), 242
esp_gattc_service_elem_t (*C++ class*), 208
esp_gattc_service_elem_t::end_handle (*C++ member*), 208
esp_gattc_service_elem_t::is_primary (*C++ member*), 208
esp_gattc_service_elem_t::start_handle (*C++ member*), 208
esp_gattc_service_elem_t::uuid (*C++ member*), 209
ESP_GATTC_SET_ASSOC_EVT (*C++ enumerator*), 244
ESP_GATTC_SRVC_CHG_EVT (*C++ enumerator*), 243
ESP_GATTC_UNREG_EVT (*C++ enumerator*), 242
ESP_GATTC_UNREG_FOR_NOTIFY_EVT (*C++ enumerator*), 243
ESP_GATTC_WRITE_CHAR_EVT (*C++ enumerator*), 242
ESP_GATTC_WRITE_DESCR_EVT (*C++ enumerator*), 242
ESP_GATTS_ADD_CHAR_DESCR_EVT (*C++ enumerator*), 227
ESP_GATTS_ADD_CHAR_EVT (*C++ enumerator*), 227
ESP_GATTS_ADD_INCL_SRVC_EVT (*C++ enumerator*), 227
esp_gatts_attr_db_t (*C++ class*), 206
esp_gatts_attr_db_t::att_desc (*C++ member*), 206
esp_gatts_attr_db_t::attr_control (*C++ member*), 206
ESP_GATTS_CANCEL_OPEN_EVT (*C++ enumerator*), 227
esp_gatts_cb_event_t (*C++ enum*), 226
esp_gatts_cb_t (*C++ type*), 226
ESP_GATTS_CLOSE_EVT (*C++ enumerator*), 227
ESP_GATTS_CONF_EVT (*C++ enumerator*), 227
ESP_GATTS_CONGEST_EVT (*C++ enumerator*), 227
ESP_GATTS_CONNECT_EVT (*C++ enumerator*), 227
ESP_GATTS_CREAT_ATTR_TAB_EVT (*C++ enumerator*), 228
ESP_GATTS_CREATE_EVT (*C++ enumerator*), 227
ESP_GATTS_DELETE_EVT (*C++ enumerator*), 227
ESP_GATTS_DISCONNECT_EVT (*C++ enumerator*), 227
ESP_GATTS_EXEC_WRITE_EVT (*C++ enumerator*), 227
esp_gatts_incl128_svc_desc_t (*C++ class*), 207
esp_gatts_incl128_svc_desc_t::end_hdl (*C++ member*), 207
esp_gatts_incl128_svc_desc_t::start_hdl (*C++ member*), 207
esp_gatts_incl_svc_desc_t (*C++ class*), 207
esp_gatts_incl_svc_desc_t::end_hdl (*C++ member*), 207
esp_gatts_incl_svc_desc_t::start_hdl (*C++ member*), 207
esp_gatts_incl_svc_desc_t::uuid (*C++ member*), 207
ESP_GATTS_LISTEN_EVT (*C++ enumerator*), 227
ESP_GATTS_MTU_EVT (*C++ enumerator*), 227
ESP_GATTS_OPEN_EVT (*C++ enumerator*), 227
ESP_GATTS_READ_EVT (*C++ enumerator*), 227
ESP_GATTS_REG_EVT (*C++ enumerator*), 227
ESP_GATTS_RESPONSE_EVT (*C++ enumerator*), 227
ESP_GATTS_SEND_SERVICE_CHANGE_EVT (*C++ enumerator*), 228
ESP_GATTS_SET_ATTR_VAL_EVT (*C++ enumerator*), 228

ESP_GATTS_START_EVT (C++ enumerator), 227
ESP_GATTS_STOP_EVT (C++ enumerator), 227
ESP_GATTS_UNREG_EVT (C++ enumerator), 227
ESP_GATTS_WRITE_EVT (C++ enumerator), 227
esp_gcov_dump (C++ function), 1123
esp_get_deep_sleep_wake_stub (C++ function), 1354
esp_get_flash_encryption_mode (C++ function), 1055
esp_get_free_heap_size (C++ function), 1326
esp_get_free_internal_heap_size (C++ function), 1326
esp_get_idf_version (C++ function), 1329
esp_get_minimum_free_heap_size (C++ function), 1326
esp_hf_answer_call_cmd_callback (C++ type), 302
ESP_HF_AT_RESPONSE_CODE_BLACKLISTED (C++ enumerator), 307
ESP_HF_AT_RESPONSE_CODE_BUSY (C++ enumerator), 307
ESP_HF_AT_RESPONSE_CODE_CME (C++ enumerator), 307
ESP_HF_AT_RESPONSE_CODE_DELAYED (C++ enumerator), 307
ESP_HF_AT_RESPONSE_CODE_ERR (C++ enumerator), 307
ESP_HF_AT_RESPONSE_CODE_NO_ANSWER (C++ enumerator), 307
ESP_HF_AT_RESPONSE_CODE_NO_CARRIER (C++ enumerator), 307
ESP_HF_AT_RESPONSE_CODE_OK (C++ enumerator), 307
esp_hf_at_response_code_t (C++ enum), 307
ESP_HF_AT_RESPONSE_ERROR (C++ enumerator), 307
ESP_HF_AT_RESPONSE_OK (C++ enumerator), 307
esp_hf_at_response_t (C++ enum), 307
ESP_HF_ATA_RESPONSE_EVT (C++ enumerator), 329
esp_hf_audio_state_callback (C++ type), 302
ESP_HF_AUDIO_STATE_CONNECTED (C++ enumerator), 303
ESP_HF_AUDIO_STATE_CONNECTED_MSBC (C++ enumerator), 303
ESP_HF_AUDIO_STATE_CONNECTING (C++ enumerator), 303
ESP_HF_AUDIO_STATE_DISCONNECTED (C++ enumerator), 303
ESP_HF_AUDIO_STATE_EVT (C++ enumerator), 329
esp_hf_audio_state_t (C++ enum), 303
ESP_HF_BCS_RESPONSE_EVT (C++ enumerator), 329
ESP_HF_BTRH_CMD_ACCEPT (C++ enumerator), 306
ESP_HF_BTRH_CMD_HOLD (C++ enumerator), 306
ESP_HF_BTRH_CMD_REJECT (C++ enumerator), 306
esp_hf_btrh_cmd_t (C++ enum), 305
ESP_HF_BTRH_STATUS_ACCEPTED (C++ enumerator), 305
ESP_HF_BTRH_STATUS_HELD (C++ enumerator), 305
ESP_HF_BTRH_STATUS_REJECTED (C++ enumerator), 305
esp_hf_btrh_status_t (C++ enum), 305
ESP_HF_BVRA_RESPONSE_EVT (C++ enumerator), 329
ESP_HF_CALL_ADDR_TYPE_INTERNATIONAL (C++ enumerator), 305
esp_hf_call_addr_type_t (C++ enum), 305
ESP_HF_CALL_ADDR_TYPE_UNKNOWN (C++ enumerator), 305
ESP_HF_CALL_HELD_STATUS_HELD (C++ enumerator), 304
ESP_HF_CALL_HELD_STATUS_HELD_AND_ACTIVE (C++ enumerator), 304
ESP_HF_CALL_HELD_STATUS_NONE (C++ enumerator), 304
esp_hf_call_held_status_t (C++ enum), 304
ESP_HF_CALL_SETUP_STATUS_IDLE (C++ enumerator), 304
ESP_HF_CALL_SETUP_STATUS_INCOMING (C++ enumerator), 304
ESP_HF_CALL_SETUP_STATUS_OUTGOING_ALERTING (C++ enumerator), 304
ESP_HF_CALL_SETUP_STATUS_OUTGOING_DIALING (C++ enumerator), 304
esp_hf_call_setup_status_t (C++ enum), 304
ESP_HF_CALL_STATUS_CALL_IN_PROGRESS (C++ enumerator), 304
ESP_HF_CALL_STATUS_NO_CALLS (C++ enumerator), 303
esp_hf_call_status_t (C++ enum), 303
ESP_HF_CALL_WAITING_ACTIVE (C++ enumerator), 306
ESP_HF_CALL_WAITING_INACTIVE (C++ enumerator), 306
esp_hf_call_waiting_status_t (C++ enum), 306
esp_hf_cb_event_t (C++ enum), 329
esp_hf_cb_param_t (C++ union), 325
esp_hf_cb_param_t::audio_stat (C++ member), 325
esp_hf_cb_param_t::bcs_rep (C++ member), 326
esp_hf_cb_param_t::cind (C++ member), 325
esp_hf_cb_param_t::conn_stat (C++ member), 325
esp_hf_cb_param_t::hf_audio_stat_param (C++ class), 326
esp_hf_cb_param_t::hf_audio_stat_param::remote_ad (C++ member), 326

esp_hf_cb_param_t::hf_audio_stat_param::state (C++ member), 326
esp_hf_cb_param_t::hf_bcs_rep_param (C++ class), 326
esp_hf_cb_param_t::hf_bcs_rep_param::mode (C++ member), 326
esp_hf_cb_param_t::hf_cind_param (C++ class), 326
esp_hf_cb_param_t::hf_cind_param::battery_level (C++ member), 326
esp_hf_cb_param_t::hf_cind_param::call_held_status (C++ member), 326
esp_hf_cb_param_t::hf_cind_param::call_setup_status (C++ member), 326
esp_hf_cb_param_t::hf_cind_param::call_status (C++ member), 326
esp_hf_cb_param_t::hf_cind_param::roam (C++ member), 326
esp_hf_cb_param_t::hf_cind_param::signal_strength (C++ member), 326
esp_hf_cb_param_t::hf_cind_param::svc (C++ member), 326
esp_hf_cb_param_t::hf_conn_stat_param (C++ class), 326
esp_hf_cb_param_t::hf_conn_stat_param::codec_mode (C++ member), 327
esp_hf_cb_param_t::hf_conn_stat_param::peer_feat (C++ member), 326
esp_hf_cb_param_t::hf_conn_stat_param::remote_addr (C++ member), 326
esp_hf_cb_param_t::hf_conn_stat_param::state (C++ member), 326
esp_hf_cb_param_t::hf_nrec_param (C++ class), 327
esp_hf_cb_param_t::hf_nrec_param::state (C++ member), 327
esp_hf_cb_param_t::hf_out_call_param (C++ class), 327
esp_hf_cb_param_t::hf_out_call_param::num_or_loc (C++ member), 327
esp_hf_cb_param_t::hf_out_call_param::remote_addr (C++ member), 327
esp_hf_cb_param_t::hf_unat_rep_param (C++ class), 327
esp_hf_cb_param_t::hf_unat_rep_param::unat (C++ member), 327
esp_hf_cb_param_t::hf_volume_control_param (C++ class), 327
esp_hf_cb_param_t::hf_volume_control_param::type (C++ member), 327
esp_hf_cb_param_t::hf_volume_control_param::volume (C++ member), 327
esp_hf_cb_param_t::hf_vra_rep_param (C++ class), 327
esp_hf_cb_param_t::hf_vra_rep_param::remote_addr (C++ member), 327
esp_hf_cb_param_t::hf_vra_rep_param::value (C++ member), 327
esp_hf_cb_param_t::hf_vts_rep_param (C++ class), 327
esp_hf_cb_param_t::hf_vts_rep_param::code (C++ member), 328
esp_hf_cb_param_t::hf_wbs_rep_param (C++ class), 328
esp_hf_cb_param_t::hf_wbs_rep_param::codec (C++ member), 328
esp_hf_cb_param_t::nrec (C++ member), 325
esp_hf_cb_param_t::out_call (C++ member), 325
esp_hf_cb_param_t::unat_rep (C++ member), 325
esp_hf_cb_param_t::volume_control (C++ member), 325
esp_hf_cb_param_t::vra_rep (C++ member), 325
esp_hf_cb_param_t::vts_rep (C++ member), 325
esp_hf_cb_param_t::wbs_rep (C++ member), 325
esp_hf_cb_t (C++ type), 329
esp_hf_chld_cmd_callback (C++ type), 302
ESP_HF_CHLD_FEAT_HOLD_ACC (C 宏), 328
ESP_HF_CHLD_FEAT_MERGE (C 宏), 328
ESP_HF_CHLD_FEAT_MERGE_DETACH (C 宏), 328
ESP_HF_CHLD_FEAT_PRIV_X (C 宏), 328
ESP_HF_CHLD_FEAT_REL (C 宏), 328
ESP_HF_CHLD_FEAT_REL_ACC (C 宏), 328
ESP_HF_CHLD_FEAT_REL_X (C 宏), 328
ESP_HF_CHLD_TYPE_HOLD_ACC (C++ enumerator), 306
ESP_HF_CHLD_TYPE_MERGE (C++ enumerator), 307
ESP_HF_CHLD_TYPE_MERGE_DETACH (C++ enumerator), 307
ESP_HF_CHLD_TYPE_PRIV_X (C++ enumerator), 307
ESP_HF_CHLD_TYPE_REL (C++ enumerator), 306
ESP_HF_CHLD_TYPE_REL_ACC (C++ enumerator), 306
ESP_HF_CHLD_TYPE_REL_X (C++ enumerator), 307
esp_hf_chld_type_t (C++ enum), 306
ESP_HF_CHUP_RESPONSE_EVT (C++ enumerator), 329
esp_hf_cind_cmd_callback (C++ type), 302
ESP_HF_CIND_RESPONSE_EVT (C++ enumerator), 329
esp_hf_clcc_cmd_callback (C++ type), 302
ESP_HF_CLCC_RESPONSE_EVT (C++ enumerator), 329
esp_hf_client_answer_call (C++ function), 311
ESP_HF_CLIENT_AT_RESPONSE_EVT (C++ enumerator), 319
ESP_HF_CLIENT_AUDIO_STATE_CONNECTED (C++ enumerator), 318

ESP_HF_CLIENT_AUDIO_STATE_CONNECTED_MSBC (C++ enumerator), 318
ESP_HF_CLIENT_AUDIO_STATE_CONNECTING (C++ enumerator), 318
ESP_HF_CLIENT_AUDIO_STATE_DISCONNECTED (C++ enumerator), 318
ESP_HF_CLIENT_AUDIO_STATE_EVT (C++ enumerator), 319
esp_hf_client_audio_state_t (C++ enum), 318
ESP_HF_CLIENT_BINP_EVT (C++ enumerator), 319
ESP_HF_CLIENT_BSIR_EVT (C++ enumerator), 319
ESP_HF_CLIENT_BTRH_EVT (C++ enumerator), 319
ESP_HF_CLIENT_BVRA_EVT (C++ enumerator), 319
esp_hf_client_cb_event_t (C++ enum), 319
esp_hf_client_cb_param_t (C++ union), 313
esp_hf_client_cb_param_t::at_response (C++ member), 313
esp_hf_client_cb_param_t::audio_stat (C++ member), 313
esp_hf_client_cb_param_t::battery_level (C++ member), 313
esp_hf_client_cb_param_t::binp (C++ member), 313
esp_hf_client_cb_param_t::bsir (C++ member), 313
esp_hf_client_cb_param_t::btrh (C++ member), 313
esp_hf_client_cb_param_t::bvra (C++ member), 313
esp_hf_client_cb_param_t::call (C++ member), 313
esp_hf_client_cb_param_t::call_held (C++ member), 313
esp_hf_client_cb_param_t::call_setup (C++ member), 313
esp_hf_client_cb_param_t::ccwa (C++ member), 313
esp_hf_client_cb_param_t::clcc (C++ member), 313
esp_hf_client_cb_param_t::clip (C++ member), 313
esp_hf_client_cb_param_t::cnum (C++ member), 313
esp_hf_client_cb_param_t::conn_stat (C++ member), 313
esp_hf_client_cb_param_t::cops (C++ member), 313
esp_hf_client_cb_param_t::hf_client_at_response_param (C++ class), 313
esp_hf_client_cb_param_t::hf_client_at_response_param::code (C++ member), 314
esp_hf_client_cb_param_t::hf_client_at_response_param::cme (C++ member), 314
esp_hf_client_cb_param_t::hf_client_audio_stat_param (C++ class), 314
esp_hf_client_cb_param_t::hf_client_audio_stat_param::peer_feat (C++ member), 314
esp_hf_client_cb_param_t::hf_client_audio_stat_param::state (C++ member), 314
esp_hf_client_cb_param_t::hf_client_battery_level_param (C++ class), 314
esp_hf_client_cb_param_t::hf_client_battery_level_param::value (C++ member), 314
esp_hf_client_cb_param_t::hf_client_binp_param (C++ class), 314
esp_hf_client_cb_param_t::hf_client_binp_param::number (C++ member), 314
esp_hf_client_cb_param_t::hf_client_bsirparam (C++ class), 314
esp_hf_client_cb_param_t::hf_client_bsirparam::state (C++ member), 314
esp_hf_client_cb_param_t::hf_client_btrh_param (C++ class), 314
esp_hf_client_cb_param_t::hf_client_btrh_param::status (C++ member), 314
esp_hf_client_cb_param_t::hf_client_bvra_param (C++ class), 314
esp_hf_client_cb_param_t::hf_client_bvra_param::value (C++ member), 315
esp_hf_client_cb_param_t::hf_client_call_held_ind_param (C++ class), 315
esp_hf_client_cb_param_t::hf_client_call_held_ind_param::status (C++ member), 315
esp_hf_client_cb_param_t::hf_client_call_ind_param (C++ class), 315
esp_hf_client_cb_param_t::hf_client_call_ind_param::status (C++ member), 315
esp_hf_client_cb_param_t::hf_client_call_setup_ind_param (C++ class), 315
esp_hf_client_cb_param_t::hf_client_call_setup_ind_param::status (C++ member), 315
esp_hf_client_cb_param_t::hf_client_ccwa_param (C++ class), 315
esp_hf_client_cb_param_t::hf_client_ccwa_param::number (C++ member), 315
esp_hf_client_cb_param_t::hf_client_clcc_param (C++ class), 315
esp_hf_client_cb_param_t::hf_client_clcc_param::dir (C++ member), 315
esp_hf_client_cb_param_t::hf_client_clcc_param::idx (C++ member), 315
esp_hf_client_cb_param_t::hf_client_clcc_param::mpty (C++ member), 315
esp_hf_client_cb_param_t::hf_client_clcc_param::number (C++ member), 315
esp_hf_client_cb_param_t::hf_client_clcc_param::status (C++ member), 315
esp_hf_client_cb_param_t::hf_client_clip_param (C++ class), 315
esp_hf_client_cb_param_t::hf_client_clip_param::number (C++ member), 316

esp_hf_client_cb_param_t::hf_client_cnum_param (C++ class), 316
esp_hf_client_cb_param_t::hf_client_cnum_param (C++ member), 316
esp_hf_client_cb_param_t::hf_client_cnum_param::number (C++ member), 316
esp_hf_client_cb_param_t::hf_client_cnum_param::type (C++ member), 316
esp_hf_client_cb_param_t::hf_client_connection_state_param (C++ class), 316
esp_hf_client_cb_param_t::hf_client_connection_state_param::peer_feat (C++ member), 316
esp_hf_client_cb_param_t::hf_client_connection_state_param::peer_feat (C++ member), 316
esp_hf_client_cb_param_t::hf_client_connection_state_param::state (C++ member), 316
esp_hf_client_cb_param_t::hf_client_connection_state_param::state (C++ member), 316
esp_hf_client_cb_param_t::hf_client_current_operator_param (C++ class), 316
esp_hf_client_cb_param_t::hf_client_current_operator_param::name (C++ member), 316
esp_hf_client_cb_param_t::hf_client_network_state_param (C++ class), 316
esp_hf_client_cb_param_t::hf_client_network_state_param::network_state (C++ member), 316
esp_hf_client_cb_param_t::hf_client_service_availability_param (C++ class), 316
esp_hf_client_cb_param_t::hf_client_service_availability_param::status (C++ member), 317
esp_hf_client_cb_param_t::hf_client_signal_strength_param (C++ class), 317
esp_hf_client_cb_param_t::hf_client_signal_strength_param::value (C++ member), 317
esp_hf_client_cb_param_t::hf_client_volume_control_param (C++ class), 317
esp_hf_client_cb_param_t::hf_client_volume_control_param::type (C++ member), 317
esp_hf_client_cb_param_t::hf_client_volume_control_param::volume (C++ member), 317
esp_hf_client_cb_param_t::roaming (C++ member), 313
esp_hf_client_cb_param_t::service_availability (C++ member), 313
esp_hf_client_cb_param_t::signal_strength (C++ member), 313
esp_hf_client_cb_param_t::volume_control (C++ member), 313
esp_hf_client_cb_t (C++ type), 318
ESP_HF_CLIENT_CCWA_EVT (C++ enumerator), 319
ESP_HF_CLIENT_CHLD_FEAT_HOLD_ACC (C 宏), 317
ESP_HF_CLIENT_CHLD_FEAT_MERGE (C 宏), 317
ESP_HF_CLIENT_CHLD_FEAT_MERGE_DETACH (C 宏), 317
ESP_HF_CLIENT_CHLD_FEAT_PRIV_X (C 宏), 317
ESP_HF_CLIENT_CHLD_FEAT_REL (C 宏), 317
ESP_HF_CLIENT_CHLD_FEAT_REL_ACC (C 宏), 317
ESP_HF_CLIENT_CHLD_FEAT_REL_X (C 宏), 317
ESP_HF_CLIENT_CIND_BATTERY_LEVEL_EVT (C++ enumerator), 319
ESP_HF_CLIENT_CIND_CALL_EVT (C++ enumerator), 319
ESP_HF_CLIENT_CIND_CALL_HELD_EVT (C++ enumerator), 319
ESP_HF_CLIENT_CIND_CALL_SETUP_EVT (C++ enumerator), 319
ESP_HF_CLIENT_CIND_ROAMING_STATUS_EVT (C++ enumerator), 319
ESP_HF_CLIENT_CIND_SERVICE_AVAILABILITY_EVT (C++ enumerator), 319
ESP_HF_CLIENT_CIND_SIGNAL_STRENGTH_EVT (C++ enumerator), 319
ESP_HF_CLIENT_CLCC_EVT (C++ enumerator), 319
ESP_HF_CLIENT_CLIP_EVT (C++ enumerator), 319
ESP_HF_CLIENT_CNUM_EVT (C++ enumerator), 319
esp_hf_client_connect (C++ function), 309
esp_hf_client_connect_audio (C++ function), 309
ESP_HF_CLIENT_CONNECTION_STATE_CONNECTED (C++ enumerator), 318
ESP_HF_CLIENT_CONNECTION_STATE_CONNECTING (C++ enumerator), 318
ESP_HF_CLIENT_CONNECTION_STATE_DISCONNECTED (C++ enumerator), 318
ESP_HF_CLIENT_CONNECTION_STATE_DISCONNECTING (C++ enumerator), 318
ESP_HF_CLIENT_CONNECTION_STATE_EVT (C++ enumerator), 319
ESP_HF_CLIENT_CONNECTION_STATE_SLC_CONNECTED (C++ enumerator), 318
esp_hf_client_connection_state_t (C++ enum), 318
ESP_HF_CLIENT_COPS_CURRENT_OPERATOR_EVT (C++ enumerator), 319
esp_hf_client_deinit (C++ function), 309
esp_hf_client_dial (C++ function), 310
esp_hf_client_dial_memory (C++ function), 310
esp_hf_client_disconnect (C++ function), 309
esp_hf_client_disconnect_audio (C++ function), 309
esp_hf_client_in_band_ring_state_t (C++ enum), 318
ESP_HF_CLIENT_IN_BAND_RINGTONE_NOT_PROVIDED (C++ enumerator), 319
ESP_HF_CLIENT_IN_BAND_RINGTONE_PROVIDED (C++ enumerator), 319
esp_hf_client_incoming_data_cb_t (C++ type), 318
esp_hf_client_init (C++ function), 309

esp_hf_client_outgoing_data_cb_t (C++ type), 318
esp_hf_client_outgoing_data_ready (C++ function), 312
esp_hf_client_pcm_resample (C++ function), 312
esp_hf_client_pcm_resample_deinit (C++ function), 312
esp_hf_client_pcm_resample_init (C++ function), 312
ESP_HF_CLIENT_PEER_FEAT_3WAY (C 宏), 317
ESP_HF_CLIENT_PEER_FEAT_CODEC (C 宏), 317
ESP_HF_CLIENT_PEER_FEAT_ECC (C 宏), 317
ESP_HF_CLIENT_PEER_FEAT_ECNR (C 宏), 317
ESP_HF_CLIENT_PEER_FEAT_ECS (C 宏), 317
ESP_HF_CLIENT_PEER_FEAT_ESCO_S4 (C 宏), 317
ESP_HF_CLIENT_PEER_FEAT_EXTERR (C 宏), 317
ESP_HF_CLIENT_PEER_FEAT_HF_IND (C 宏), 317
ESP_HF_CLIENT_PEER_FEAT_INBAND (C 宏), 317
ESP_HF_CLIENT_PEER_FEAT_REJECT (C 宏), 317
ESP_HF_CLIENT_PEER_FEAT_VREC (C 宏), 317
ESP_HF_CLIENT_PEER_FEAT_VTAG (C 宏), 317
esp_hf_client_query_current_calls (C++ function), 311
esp_hf_client_query_current_operator_name (C++ function), 311
esp_hf_client_register_callback (C++ function), 308
esp_hf_client_register_data_callback (C++ function), 312
esp_hf_client_reject_call (C++ function), 311
esp_hf_client_request_last_voice_tag_number (C++ function), 312
esp_hf_client_retrieve_subscriber_info (C++ function), 311
ESP_HF_CLIENT_RING_IND_EVT (C++ enumerator), 320
esp_hf_client_send_btrh_cmd (C++ function), 311
esp_hf_client_send_chld_cmd (C++ function), 310
esp_hf_client_send_dtmf (C++ function), 311
esp_hf_client_send_nrec (C++ function), 312
esp_hf_client_start_voice_recognition (C++ function), 310
esp_hf_client_stop_voice_recognition (C++ function), 310
ESP_HF_CLIENT_VOLUME_CONTROL_EVT (C++ enumerator), 319
esp_hf_client_volume_update (C++ function), 310
ESP_HF_CME_AG_FAILURE (C++ enumerator), 307
ESP_HF_CME_DIAL_STRING_TOO_LONG (C++ enumerator), 308
esp_hf_cme_err_t (C++ enum), 307
ESP_HF_CME_INCORRECT_PASSWORD (C++ enumerator), 308
ESP_HF_CME_INVALID_CHARACTERS_IN_DIAL_STRING (C++ enumerator), 308
ESP_HF_CME_INVALID_CHARACTERS_IN_TEXT_STRING (C++ enumerator), 308
ESP_HF_CME_INVALID_INDEX (C++ enumerator), 308
ESP_HF_CME_MEMEORY_FAILURE (C++ enumerator), 308
ESP_HF_CME_MEMEORY_FULL (C++ enumerator), 308
ESP_HF_CME_NETWORK_NOT_ALLOWED (C++ enumerator), 308
ESP_HF_CME_NETWORK_TIMEOUT (C++ enumerator), 308
ESP_HF_CME_NO_CONNECTION_TO_PHONE (C++ enumerator), 307
ESP_HF_CME_NO_NETWORK_SERVICE (C++ enumerator), 308
ESP_HF_CME_OPERATION_NOT_ALLOWED (C++ enumerator), 307
ESP_HF_CME_OPERATION_NOT_SUPPORTED (C++ enumerator), 307
ESP_HF_CME_PH_SIM_PIN_REQUIRED (C++ enumerator), 307
ESP_HF_CME_SIM_BUSY (C++ enumerator), 308
ESP_HF_CME_SIM_FAILURE (C++ enumerator), 308
ESP_HF_CME_SIM_NOT_INSERTED (C++ enumerator), 307
ESP_HF_CME_SIM_PIN2_REQUIRED (C++ enumerator), 308
ESP_HF_CME_SIM_PIN_REQUIRED (C++ enumerator), 307
ESP_HF_CME_SIM_PUK2_REQUIRED (C++ enumerator), 308
ESP_HF_CME_SIM_PUK_REQUIRED (C++ enumerator), 308
ESP_HF_CME_TEXT_STRING_TOO_LONG (C++ enumerator), 308
esp_hf_cnum_cmd_callback (C++ type), 302
ESP_HF_CNUM_RESPONSE_EVT (C++ enumerator), 329
esp_hf_connection_state_callback (C++ type), 302
ESP_HF_CONNECTION_STATE_CONNECTED (C++ enumerator), 306
ESP_HF_CONNECTION_STATE_CONNECTING (C++ enumerator), 306
ESP_HF_CONNECTION_STATE_DISCONNECTED (C++ enumerator), 306
ESP_HF_CONNECTION_STATE_DISCONNECTING (C++ enumerator), 306
ESP_HF_CONNECTION_STATE_EVT (C++ enumer-

ator), 329
ESP_HF_CONNECTION_STATE_SLC_CONNECTED (*C++ enumerator*), 306
esp_hf_connection_state_t (*C++ enum*), 306
esp_hf_cops_cmd_callback (*C++ type*), 302
ESP_HF_COPS_RESPONSE_EVT (*C++ enumerator*), 329
ESP_HF_CURRENT_CALL_DIRECTION_INCOMING (*C++ enumerator*), 305
ESP_HF_CURRENT_CALL_DIRECTION_OUTGOING (*C++ enumerator*), 305
esp_hf_current_call_direction_t (*C++ enum*), 304
ESP_HF_CURRENT_CALL_MODE_DATA (*C++ enumerator*), 305
ESP_HF_CURRENT_CALL_MODE_FAX (*C++ enumerator*), 305
esp_hf_current_call_mode_t (*C++ enum*), 305
ESP_HF_CURRENT_CALL_MODE_VOICE (*C++ enumerator*), 305
ESP_HF_CURRENT_CALL_MPTY_TYPE_MULTI (*C++ enumerator*), 305
ESP_HF_CURRENT_CALL_MPTY_TYPE_SINGLE (*C++ enumerator*), 305
esp_hf_current_call_mpty_type_t (*C++ enum*), 305
ESP_HF_CURRENT_CALL_STATUS_ACTIVE (*C++ enumerator*), 304
ESP_HF_CURRENT_CALL_STATUS_ALERTING (*C++ enumerator*), 304
ESP_HF_CURRENT_CALL_STATUS_DIALING (*C++ enumerator*), 304
ESP_HF_CURRENT_CALL_STATUS_HELD (*C++ enumerator*), 304
ESP_HF_CURRENT_CALL_STATUS_HELD_BY_RESP_HOLD (*C++ enumerator*), 304
ESP_HF_CURRENT_CALL_STATUS_INCOMING (*C++ enumerator*), 304
esp_hf_current_call_status_t (*C++ enum*), 304
ESP_HF_CURRENT_CALL_STATUS_WAITING (*C++ enumerator*), 304
esp_hf_dial_call_cmd_callback (*C++ type*), 302
ESP_HF_DIAL_EVT (*C++ enumerator*), 329
esp_hf_dtmf_cmd_callback (*C++ type*), 302
esp_hf_hangup_call_cmd_callback (*C++ type*), 302
esp_hf_in_band_ring_state_t (*C++ enum*), 302
ESP_HF_IN_BAND_RINGTONE_NOT_PROVIDED (*C++ enumerator*), 302
ESP_HF_IN_BAND_RINGTONE_PROVIDED (*C++ enumerator*), 302
esp_hf_incoming_data_cb_t (*C++ type*), 328
ESP_HF_IND_UPDATE_EVT (*C++ enumerator*), 329
esp_hf_key_pressed_cmd_callback (*C++ type*), 302
ESP_HF_NETWORK_STATE_AVAILABLE (*C++ enumerator*), 303
ESP_HF_NETWORK_STATE_NOT_AVAILABLE (*C++ enumerator*), 303
esp_hf_network_state_t (*C++ enum*), 303
esp_hf_nrec_cmd_callback (*C++ type*), 302
ESP_HF_NREC_RESPONSE_EVT (*C++ enumerator*), 329
ESP_HF_NREC_START (*C++ enumerator*), 306
ESP_HF_NREC_STOP (*C++ enumerator*), 306
esp_hf_nrec_t (*C++ enum*), 306
esp_hf_outgoing_data_cb_t (*C++ type*), 328
esp_hf_outgoing_data_ready (*C++ function*), 325
ESP_HF_PEER_FEAT_3WAY (*C 宏*), 328
ESP_HF_PEER_FEAT_CODEC (*C 宏*), 328
ESP_HF_PEER_FEAT_ECC (*C 宏*), 328
ESP_HF_PEER_FEAT_ECNR (*C 宏*), 328
ESP_HF_PEER_FEAT_ECS (*C 宏*), 328
ESP_HF_PEER_FEAT_ESCO_S4 (*C 宏*), 328
ESP_HF_PEER_FEAT_EXTERR (*C 宏*), 328
ESP_HF_PEER_FEAT_HF_IND (*C 宏*), 328
ESP_HF_PEER_FEAT_INBAND (*C 宏*), 328
ESP_HF_PEER_FEAT_REJECT (*C 宏*), 328
ESP_HF_PEER_FEAT_VREC (*C 宏*), 328
ESP_HF_PEER_FEAT_VTAG (*C 宏*), 328
ESP_HF_ROAMING_STATUS_ACTIVE (*C++ enumerator*), 304
ESP_HF_ROAMING_STATUS_INACTIVE (*C++ enumerator*), 304
esp_hf_roaming_status_t (*C++ enum*), 304
ESP_HF_SERVICE_TYPE_HOME (*C++ enumerator*), 303
ESP_HF_SERVICE_TYPE_ROAMING (*C++ enumerator*), 303
esp_hf_service_type_t (*C++ enum*), 303
ESP_HF_SUBSCRIBER_SERVICE_TYPE_FAX (*C++ enumerator*), 305
esp_hf_subscriber_service_type_t (*C++ enum*), 305
ESP_HF_SUBSCRIBER_SERVICE_TYPE_UNKNOWN (*C++ enumerator*), 305
ESP_HF_SUBSCRIBER_SERVICE_TYPE_VOICE (*C++ enumerator*), 305
esp_hf_unat_response (*C++ function*), 321
ESP_HF_UNAT_RESPONSE_EVT (*C++ enumerator*), 329
esp_hf_unknown_at_cmd_callback (*C++ type*), 302
esp_hf_volume_cmd_callback (*C++ type*), 302
ESP_HF_VOLUME_CONTROL_EVT (*C++ enumerator*), 329
ESP_HF_VOLUME_CONTROL_TARGET_MIC (*C++ enumerator*), 303
ESP_HF_VOLUME_CONTROL_TARGET_SPK (*C++ enumerator*), 303
esp_hf_volume_control_target_t (*C++*

enum), 303
ESP_HF_VOLUME_TYPE_MIC (*C++ enumerator*), 303
ESP_HF_VOLUME_TYPE_SPK (*C++ enumerator*), 303
esp_hf_volume_type_t (*C++ enum*), 303
esp_hf_vr_cmd_callback (*C++ type*), 302
ESP_HF_VR_STATE_DISABLED (*C++ enumerator*), 303
ESP_HF_VR_STATE_ENABLED (*C++ enumerator*), 303
esp_hf_vr_state_t (*C++ enum*), 303
ESP_HF_VTS_RESPONSE_EVT (*C++ enumerator*), 329
esp_hf_wbs_callback (*C++ type*), 302
esp_hf_wbs_config_t (*C++ enum*), 306
ESP_HF_WBS_NO (*C++ enumerator*), 306
ESP_HF_WBS_NONE (*C++ enumerator*), 306
ESP_HF_WBS_RESPONSE_EVT (*C++ enumerator*), 329
ESP_HF_WBS_YES (*C++ enumerator*), 306
esp_himem_alloc (*C++ function*), 1308
esp_himem_alloc_map_range (*C++ function*), 1308
ESP_HIMEM_BLKSZ (*C 宏*), 1309
esp_himem_free (*C++ function*), 1308
esp_himem_free_map_range (*C++ function*), 1309
esp_himem_get_free_size (*C++ function*), 1309
esp_himem_get_phys_size (*C++ function*), 1309
esp_himem_handle_t (*C++ type*), 1309
esp_himem_map (*C++ function*), 1308
ESP_HIMEM_MAPFLAG_RO (*C 宏*), 1309
esp_himem_rangehandle_t (*C++ type*), 1309
esp_himem_reserved_area_size (*C++ function*), 1309
esp_himem_unmap (*C++ function*), 1309
esp_http_client_add_auth (*C++ function*), 920
esp_http_client_auth_type_t (*C++ enum*), 925
esp_http_client_cleanup (*C++ function*), 919
esp_http_client_close (*C++ function*), 919
esp_http_client_config_t (*C++ class*), 921
esp_http_client_config_t::auth_type (*C++ member*), 922
esp_http_client_config_t::buffer_size (*C++ member*), 922
esp_http_client_config_t::buffer_size_tx (*C++ member*), 922
esp_http_client_config_t::cert_pem (*C++ member*), 922
esp_http_client_config_t::client_cert_pem (*C++ member*), 922
esp_http_client_config_t::client_key_password (*C++ member*), 922
esp_http_client_config_t::client_key_password_len (*C++ member*), 922
esp_http_client_config_t::client_key_pem (*C++ member*), 922
esp_http_client_config_t::crt_bundle_attach (*C++ member*), 923
esp_http_client_config_t::disable_auto_redirect (*C++ member*), 922
esp_http_client_config_t::event_handler (*C++ member*), 922
esp_http_client_config_t::host (*C++ member*), 921
esp_http_client_config_t::is_async (*C++ member*), 922
esp_http_client_config_t::keep_alive_count (*C++ member*), 923
esp_http_client_config_t::keep_alive_enable (*C++ member*), 923
esp_http_client_config_t::keep_alive_idle (*C++ member*), 923
esp_http_client_config_t::keep_alive_interval (*C++ member*), 923
esp_http_client_config_t::max_authorization_retri (*C++ member*), 922
esp_http_client_config_t::max_redirection_count (*C++ member*), 922
esp_http_client_config_t::method (*C++ member*), 922
esp_http_client_config_t::password (*C++ member*), 922
esp_http_client_config_t::path (*C++ member*), 922
esp_http_client_config_t::port (*C++ member*), 922
esp_http_client_config_t::query (*C++ member*), 922
esp_http_client_config_t::skip_cert_common_name_c (*C++ member*), 923
esp_http_client_config_t::timeout_ms (*C++ member*), 922
esp_http_client_config_t::transport_type (*C++ member*), 922
esp_http_client_config_t::url (*C++ member*), 921
esp_http_client_config_t::use_global_ca_store (*C++ member*), 923
esp_http_client_config_t::user_agent (*C++ member*), 922
esp_http_client_config_t::user_data (*C++ member*), 922
esp_http_client_config_t::username (*C++ member*), 922
esp_http_client_delete_header (*C++ function*), 918
esp_http_client_event (*C++ class*), 921
esp_http_client_event::client (*C++ member*), 921
esp_http_client_event::data (*C++ mem-*

ber), 921
esp_http_client_event::data_len (*C++ member*), 921
esp_http_client_event::event_id (*C++ member*), 921
esp_http_client_event::header_key (*C++ member*), 921
esp_http_client_event::header_value (*C++ member*), 921
esp_http_client_event::user_data (*C++ member*), 921
esp_http_client_event_handle_t (*C++ type*), 923
esp_http_client_event_id_t (*C++ enum*), 923
esp_http_client_event_t (*C++ type*), 923
esp_http_client_fetch_headers (*C++ function*), 919
esp_http_client_flush_response (*C++ function*), 920
esp_http_client_get_chunk_length (*C++ function*), 921
esp_http_client_get_content_length (*C++ function*), 919
esp_http_client_get_header (*C++ function*), 917
esp_http_client_get_password (*C++ function*), 917
esp_http_client_get_post_field (*C++ function*), 916
esp_http_client_get_status_code (*C++ function*), 919
esp_http_client_get_transport_type (*C++ function*), 920
esp_http_client_get_url (*C++ function*), 921
esp_http_client_get_username (*C++ function*), 917
esp_http_client_handle_t (*C++ type*), 923
esp_http_client_init (*C++ function*), 916
esp_http_client_is_chunked_response (*C++ function*), 919
esp_http_client_is_complete_data_received (*C++ function*), 920
esp_http_client_method_t (*C++ enum*), 924
esp_http_client_open (*C++ function*), 918
esp_http_client_perform (*C++ function*), 916
esp_http_client_read (*C++ function*), 919
esp_http_client_read_response (*C++ function*), 920
esp_http_client_set_authtype (*C++ function*), 918
esp_http_client_set_header (*C++ function*), 917
esp_http_client_set_method (*C++ function*), 918
esp_http_client_set_password (*C++ function*), 918
esp_http_client_set_post_field (*C++ function*), 916
esp_http_client_set_redirection (*C++ function*), 920
esp_http_client_set_url (*C++ function*), 916
esp_http_client_set_username (*C++ function*), 917
esp_http_client_transport_t (*C++ enum*), 924
esp_http_client_write (*C++ function*), 918
esp_https_ota (*C++ function*), 1150
esp_https_ota_abort (*C++ function*), 1151
esp_https_ota_begin (*C++ function*), 1150
esp_https_ota_config_t (*C++ class*), 1152
esp_https_ota_config_t::bulk_flash_erase (*C++ member*), 1152
esp_https_ota_config_t::http_client_init_cb (*C++ member*), 1152
esp_https_ota_config_t::http_config (*C++ member*), 1152
esp_https_ota_finish (*C++ function*), 1151
esp_https_ota_get_image_len_read (*C++ function*), 1152
esp_https_ota_get_img_desc (*C++ function*), 1152
esp_https_ota_handle_t (*C++ type*), 1153
esp_https_ota_is_complete_data_received (*C++ function*), 1151
esp_https_ota_perform (*C++ function*), 1151
ESP_IDF_VERSION (*C 宏*), 1329
ESP_IDF_VERSION_MAJOR (*C 宏*), 1329
ESP_IDF_VERSION_MINOR (*C 宏*), 1329
ESP_IDF_VERSION_PATCH (*C 宏*), 1329
ESP_IDF_VERSION_VAL (*C 宏*), 1329
ESP_IMAGE_FLASH_SIZE_16MB (*C++ enumerator*), 1120
ESP_IMAGE_FLASH_SIZE_1MB (*C++ enumerator*), 1120
ESP_IMAGE_FLASH_SIZE_2MB (*C++ enumerator*), 1120
ESP_IMAGE_FLASH_SIZE_4MB (*C++ enumerator*), 1120
ESP_IMAGE_FLASH_SIZE_8MB (*C++ enumerator*), 1120
ESP_IMAGE_FLASH_SIZE_MAX (*C++ enumerator*), 1120
esp_image_flash_size_t (*C++ enum*), 1120
ESP_IMAGE_HEADER_MAGIC (*C 宏*), 1119
esp_image_header_t (*C++ class*), 1117
esp_image_header_t::chip_id (*C++ member*), 1117
esp_image_header_t::entry_addr (*C++ member*), 1117
esp_image_header_t::hash_appended (*C++ member*), 1118
esp_image_header_t::magic (*C++ member*), 1117
esp_image_header_t::max_chip_rev_full (*C++ member*), 1118

esp_image_header_t::min_chip_rev (C++ member), 1117
esp_image_header_t::min_chip_rev_full (C++ member), 1118
esp_image_header_t::reserved (C++ member), 1118
esp_image_header_t::segment_count (C++ member), 1117
esp_image_header_t::spi_mode (C++ member), 1117
esp_image_header_t::spi_pin_drv (C++ member), 1117
esp_image_header_t::spi_size (C++ member), 1117
esp_image_header_t::spi_speed (C++ member), 1117
esp_image_header_t::wp_pin (C++ member), 1117
ESP_IMAGE_MAX_SEGMENTS (C 宏), 1119
esp_image_segment_header_t (C++ class), 1118
esp_image_segment_header_t::data_len (C++ member), 1118
esp_image_segment_header_t::load_addr (C++ member), 1118
esp_image_spi_freq_t (C++ enum), 1119
ESP_IMAGE_SPI_MODE_DIO (C++ enumerator), 1119
ESP_IMAGE_SPI_MODE_DOUT (C++ enumerator), 1119
ESP_IMAGE_SPI_MODE_FAST_READ (C++ enumerator), 1119
ESP_IMAGE_SPI_MODE_QIO (C++ enumerator), 1119
ESP_IMAGE_SPI_MODE_QOUT (C++ enumerator), 1119
ESP_IMAGE_SPI_MODE_SLOW_READ (C++ enumerator), 1119
esp_image_spi_mode_t (C++ enum), 1119
ESP_IMAGE_SPI_SPEED_20M (C++ enumerator), 1119
ESP_IMAGE_SPI_SPEED_26M (C++ enumerator), 1119
ESP_IMAGE_SPI_SPEED_40M (C++ enumerator), 1119
ESP_IMAGE_SPI_SPEED_80M (C++ enumerator), 1120
esp_int_wdt_init (C++ function), 1358
esp_intr_alloc (C++ function), 1314
esp_intr_alloc_intrstatus (C++ function), 1314
ESP_INTR_DISABLE (C 宏), 1317
esp_intr_disable (C++ function), 1315
esp_intr_disable_source (C++ function), 1316
ESP_INTR_ENABLE (C 宏), 1317
esp_intr_enable (C++ function), 1316
esp_intr_enable_source (C++ function), 1316
ESP_INTR_FLAG_EDGE (C 宏), 1317
ESP_INTR_FLAG_HIGH (C 宏), 1317
ESP_INTR_FLAG_INTRDISABLED (C 宏), 1317
ESP_INTR_FLAG_IRAM (C 宏), 1317
ESP_INTR_FLAG_LEVEL1 (C 宏), 1316
ESP_INTR_FLAG_LEVEL2 (C 宏), 1316
ESP_INTR_FLAG_LEVEL3 (C 宏), 1316
ESP_INTR_FLAG_LEVEL4 (C 宏), 1316
ESP_INTR_FLAG_LEVEL5 (C 宏), 1316
ESP_INTR_FLAG_LEVEL6 (C 宏), 1316
ESP_INTR_FLAG_LEVELMASK (C 宏), 1317
ESP_INTR_FLAG_LOWMED (C 宏), 1317
ESP_INTR_FLAG_NMI (C 宏), 1317
ESP_INTR_FLAG_SHARED (C 宏), 1317
esp_intr_flags_to_level (C++ function), 1316
esp_intr_free (C++ function), 1315
esp_intr_get_cpu (C++ function), 1315
esp_intr_get_intno (C++ function), 1315
esp_intr_mark_shared (C++ function), 1314
esp_intr_noniram_disable (C++ function), 1316
esp_intr_noniram_enable (C++ function), 1316
esp_intr_reserve (C++ function), 1314
esp_intr_set_in_iram (C++ function), 1316
ESP_IO_CAP_IN (C 宏), 195
ESP_IO_CAP_IO (C 宏), 195
ESP_IO_CAP_KBDISP (C 宏), 195
ESP_IO_CAP_NONE (C 宏), 195
ESP_IO_CAP_OUT (C 宏), 195
esp_ip4addr_aton (C++ function), 653
esp_ip4addr_ntoa (C++ function), 653
esp_ipc_call (C++ function), 1310
esp_ipc_call_blocking (C++ function), 1310
ESP_LE_AUTH_BOND (C 宏), 194
ESP_LE_AUTH_NO_BOND (C 宏), 194
ESP_LE_AUTH_REQ_BOND_MITM (C 宏), 195
ESP_LE_AUTH_REQ_MITM (C 宏), 195
ESP_LE_AUTH_REQ_SC_BOND (C 宏), 195
ESP_LE_AUTH_REQ_SC_MITM (C 宏), 195
ESP_LE_AUTH_REQ_SC_MITM_BOND (C 宏), 195
ESP_LE_AUTH_REQ_SC_ONLY (C 宏), 195
ESP_LE_KEY_LCSRK (C 宏), 194
ESP_LE_KEY_LENC (C 宏), 194
ESP_LE_KEY_LID (C 宏), 194
ESP_LE_KEY_LLK (C 宏), 194
ESP_LE_KEY_NONE (C 宏), 194
ESP_LE_KEY_PCSRK (C 宏), 194
ESP_LE_KEY_PENC (C 宏), 194
ESP_LE_KEY_PID (C 宏), 194
ESP_LE_KEY_PLK (C 宏), 194
esp_light_sleep_start (C++ function), 1353
esp_link_key (C++ type), 156
esp_local_ctrl_add_property (C++ function), 982
esp_local_ctrl_config (C++ class), 985

esp_local_ctrl_config::handlers (C++ member), 985
esp_local_ctrl_config::max_properties (C++ member), 985
esp_local_ctrl_config::proto_sec (C++ member), 985
esp_local_ctrl_config::transport (C++ member), 985
esp_local_ctrl_config::transport_config (C++ member), 985
esp_local_ctrl_config_t (C++ type), 986
esp_local_ctrl_get_property (C++ function), 982
esp_local_ctrl_get_transport_ble (C++ function), 981
esp_local_ctrl_get_transport_httpd (C++ function), 981
esp_local_ctrl_handlers (C++ class), 984
esp_local_ctrl_handlers::get_prop_values (C++ member), 984
esp_local_ctrl_handlers::set_prop_values (C++ member), 984
esp_local_ctrl_handlers::usr_ctx (C++ member), 984
esp_local_ctrl_handlers::usr_ctx_free_fn (C++ member), 984
esp_local_ctrl_handlers_t (C++ type), 985
esp_local_ctrl_prop (C++ class), 983
esp_local_ctrl_prop::ctx (C++ member), 983
esp_local_ctrl_prop::ctx_free_fn (C++ member), 983
esp_local_ctrl_prop::flags (C++ member), 983
esp_local_ctrl_prop::name (C++ member), 983
esp_local_ctrl_prop::size (C++ member), 983
esp_local_ctrl_prop::type (C++ member), 983
esp_local_ctrl_prop_t (C++ type), 985
esp_local_ctrl_prop_val (C++ class), 983
esp_local_ctrl_prop_val::data (C++ member), 983
esp_local_ctrl_prop_val::free_fn (C++ member), 983
esp_local_ctrl_prop_val::size (C++ member), 983
esp_local_ctrl_prop_val_t (C++ type), 985
esp_local_ctrl_proto_sec (C++ enum), 986
esp_local_ctrl_proto_sec_cfg (C++ class), 984
esp_local_ctrl_proto_sec_cfg::custom_handle (C++ member), 985
esp_local_ctrl_proto_sec_cfg::pop (C++ member), 985
esp_local_ctrl_proto_sec_cfg::version (C++ member), 985
esp_local_ctrl_proto_sec_cfg_t (C++ type), 986
esp_local_ctrl_proto_sec_t (C++ type), 986
esp_local_ctrl_remove_property (C++ function), 982
esp_local_ctrl_set_handler (C++ function), 982
esp_local_ctrl_start (C++ function), 981
esp_local_ctrl_stop (C++ function), 981
ESP_LOCAL_CTRL_TRANSPORT_BLE (C 宏), 985
esp_local_ctrl_transport_config_ble_t (C++ type), 985
esp_local_ctrl_transport_config_httpd_t (C++ type), 985
esp_local_ctrl_transport_config_t (C++ union), 982
esp_local_ctrl_transport_config_t::ble (C++ member), 983
esp_local_ctrl_transport_config_t::httpd (C++ member), 983
ESP_LOCAL_CTRL_TRANSPORT_HTTPD (C 宏), 985
esp_local_ctrl_transport_t (C++ type), 985
ESP_LOG_BUFFER_CHAR (C 宏), 1321
ESP_LOG_BUFFER_CHAR_LEVEL (C 宏), 1320
ESP_LOG_BUFFER_HEX (C 宏), 1321
ESP_LOG_BUFFER_HEX_LEVEL (C 宏), 1320
ESP_LOG_BUFFER_HEXDUMP (C 宏), 1320
ESP_LOG_DEBUG (C++ enumerator), 1322
ESP_LOG_EARLY_IMPL (C 宏), 1321
esp_log_early_timestamp (C++ function), 1320
ESP_LOG_ERROR (C++ enumerator), 1322
ESP_LOG_INFO (C++ enumerator), 1322
ESP_LOG_LEVEL (C 宏), 1321
ESP_LOG_LEVEL_LOCAL (C 宏), 1322
esp_log_level_set (C++ function), 1319
esp_log_level_t (C++ enum), 1322
ESP_LOG_NONE (C++ enumerator), 1322
esp_log_set_vprintf (C++ function), 1319
esp_log_system_timestamp (C++ function), 1319
esp_log_timestamp (C++ function), 1319
ESP_LOG_VERBOSE (C++ enumerator), 1322
ESP_LOG_WARN (C++ enumerator), 1322
esp_log_write (C++ function), 1320
esp_log_writev (C++ function), 1320
ESP_LOGD (C 宏), 1321
ESP_LOGE (C 宏), 1321
ESP_LOGI (C 宏), 1321
ESP_LOGV (C 宏), 1321
ESP_LOGW (C 宏), 1321
ESP_MAC_BT (C++ enumerator), 1328
ESP_MAC_ETH (C++ enumerator), 1328
esp_mac_type_t (C++ enum), 1328
ESP_MAC_WIFI_SOFTAP (C++ enumerator), 1328
ESP_MAC_WIFI_STA (C++ enumerator), 1328

esp_mesh_allow_root_conflicts (C++ function), 607
esp_mesh_available_txupQ_num (C++ function), 607
esp_mesh_connect (C++ function), 611
esp_mesh_deinit (C++ function), 599
esp_mesh_delete_group_id (C++ function), 608
esp_mesh_disable_ps (C++ function), 612
esp_mesh_disconnect (C++ function), 611
esp_mesh_enable_ps (C++ function), 612
esp_mesh_fix_root (C++ function), 609
esp_mesh_flush_scan_result (C++ function), 611
esp_mesh_flush_upstream_packets (C++ function), 610
esp_mesh_get_active_duty_cycle (C++ function), 612
esp_mesh_get_ap_assoc_expire (C++ function), 606
esp_mesh_get_ap_authmode (C++ function), 604
esp_mesh_get_ap_connections (C++ function), 604
esp_mesh_get_capacity_num (C++ function), 608
esp_mesh_get_config (C++ function), 602
esp_mesh_get_group_list (C++ function), 608
esp_mesh_get_group_num (C++ function), 608
esp_mesh_get_id (C++ function), 603
esp_mesh_get_ie_crypto_key (C++ function), 609
esp_mesh_get_layer (C++ function), 604
esp_mesh_get_max_layer (C++ function), 604
esp_mesh_get_network_duty_cycle (C++ function), 613
esp_mesh_get_non_mesh_connections (C++ function), 604
esp_mesh_get_parent_bssid (C++ function), 605
esp_mesh_get_root_healing_delay (C++ function), 609
esp_mesh_get_router (C++ function), 603
esp_mesh_get_router_bssid (C++ function), 611
esp_mesh_get_routing_table (C++ function), 606
esp_mesh_get_routing_table_size (C++ function), 606
esp_mesh_get_running_active_duty_cycle (C++ function), 613
esp_mesh_get_rx_pending (C++ function), 607
esp_mesh_get_self_organized (C++ function), 605
esp_mesh_get_subnet_nodes_list (C++ function), 610
esp_mesh_get_subnet_nodes_num (C++ function), 610
esp_mesh_get_topology (C++ function), 612
esp_mesh_get_total_node_num (C++ function), 606
esp_mesh_get_tsf_time (C++ function), 611
esp_mesh_get_tx_pending (C++ function), 607
esp_mesh_get_type (C++ function), 603
esp_mesh_get_vote_percentage (C++ function), 606
esp_mesh_get_xon_qsize (C++ function), 607
esp_mesh_init (C++ function), 599
esp_mesh_is_device_active (C++ function), 612
esp_mesh_is_my_group (C++ function), 608
esp_mesh_is_ps_enabled (C++ function), 612
esp_mesh_is_root (C++ function), 605
esp_mesh_is_root_conflicts_allowed (C++ function), 607
esp_mesh_is_root_fixed (C++ function), 609
esp_mesh_post_toDS_state (C++ function), 607
esp_mesh_ps_duty_signaling (C++ function), 614
esp_mesh_recv (C++ function), 601
esp_mesh_recv_toDS (C++ function), 601
esp_mesh_scan_get_ap_ie_len (C++ function), 610
esp_mesh_scan_get_ap_record (C++ function), 610
esp_mesh_send (C++ function), 600
esp_mesh_send_block_time (C++ function), 601
esp_mesh_set_active_duty_cycle (C++ function), 612
esp_mesh_set_ap_assoc_expire (C++ function), 606
esp_mesh_set_ap_authmode (C++ function), 604
esp_mesh_set_ap_connections (C++ function), 604
esp_mesh_set_ap_password (C++ function), 604
esp_mesh_set_capacity_num (C++ function), 608
esp_mesh_set_config (C++ function), 602
esp_mesh_set_group_id (C++ function), 608
esp_mesh_set_id (C++ function), 603
esp_mesh_set_ie_crypto_funcs (C++ function), 608
esp_mesh_set_ie_crypto_key (C++ function), 609
esp_mesh_set_max_layer (C++ function), 603
esp_mesh_set_network_duty_cycle (C++ function), 613
esp_mesh_set_parent (C++ function), 609
esp_mesh_set_root_healing_delay (C++ function), 609
esp_mesh_set_router (C++ function), 603
esp_mesh_set_self_organized (C++ func-

tion), 605
esp_mesh_set_topology (*C++ function*), 611
esp_mesh_set_type (*C++ function*), 603
esp_mesh_set_vote_percentage (*C++ function*), 606
esp_mesh_set_xon_qsize (*C++ function*), 607
esp_mesh_start (*C++ function*), 599
esp_mesh_stop (*C++ function*), 599
esp_mesh_switch_channel (*C++ function*), 611
esp_mesh_topology_t (*C++ enum*), 626
esp_mesh_waive_root (*C++ function*), 605
esp_mqtt_client_config_t (*C++ class*), 968
esp_mqtt_client_config_t::alpn_protos (*C++ member*), 970
esp_mqtt_client_config_t::buffer_size (*C++ member*), 969
esp_mqtt_client_config_t::cert_len (*C++ member*), 969
esp_mqtt_client_config_t::cert_pem (*C++ member*), 969
esp_mqtt_client_config_t::client_cert_len (*C++ member*), 969
esp_mqtt_client_config_t::client_cert_pem (*C++ member*), 969
esp_mqtt_client_config_t::client_id (*C++ member*), 968
esp_mqtt_client_config_t::client_key_len (*C++ member*), 969
esp_mqtt_client_config_t::client_key_pem (*C++ member*), 969
esp_mqtt_client_config_t::clientkey_password (*C++ member*), 970
esp_mqtt_client_config_t::clientkey_password_len (*C++ member*), 970
esp_mqtt_client_config_t::crt_bundle_attach (*C++ member*), 970
esp_mqtt_client_config_t::disable_auto_reconnect (*C++ member*), 969
esp_mqtt_client_config_t::disable_clean_session (*C++ member*), 969
esp_mqtt_client_config_t::disable_keepalive (*C++ member*), 970
esp_mqtt_client_config_t::ds_data (*C++ member*), 970
esp_mqtt_client_config_t::event_handle (*C++ member*), 968
esp_mqtt_client_config_t::event_loop_handle (*C++ member*), 968
esp_mqtt_client_config_t::host (*C++ member*), 968
esp_mqtt_client_config_t::keepalive (*C++ member*), 969
esp_mqtt_client_config_t::lwt_msg (*C++ member*), 968
esp_mqtt_client_config_t::lwt_msg_len (*C++ member*), 969
esp_mqtt_client_config_t::lwt_qos (*C++ member*), 969
esp_mqtt_client_config_t::lwt_retain (*C++ member*), 969
esp_mqtt_client_config_t::lwt_topic (*C++ member*), 968
esp_mqtt_client_config_t::message_retransmit_time (*C++ member*), 970
esp_mqtt_client_config_t::network_timeout_ms (*C++ member*), 970
esp_mqtt_client_config_t::out_buffer_size (*C++ member*), 970
esp_mqtt_client_config_t::password (*C++ member*), 968
esp_mqtt_client_config_t::path (*C++ member*), 970
esp_mqtt_client_config_t::port (*C++ member*), 968
esp_mqtt_client_config_t::protocol_ver (*C++ member*), 970
esp_mqtt_client_config_t::psk_hint_key (*C++ member*), 969
esp_mqtt_client_config_t::reconnect_timeout_ms (*C++ member*), 970
esp_mqtt_client_config_t::refresh_connection_afte (*C++ member*), 969
esp_mqtt_client_config_t::set_null_client_id (*C++ member*), 968
esp_mqtt_client_config_t::skip_cert_common_name_c (*C++ member*), 970
esp_mqtt_client_config_t::task_prio (*C++ member*), 969
esp_mqtt_client_config_t::task_stack (*C++ member*), 969
esp_mqtt_client_config_t::transport (*C++ member*), 969
esp_mqtt_client_config_t::uri (*C++ member*), 968
esp_mqtt_client_config_t::use_global_ca_store (*C++ member*), 970
esp_mqtt_client_config_t::use_secure_element (*C++ member*), 970
esp_mqtt_client_config_t::user_context (*C++ member*), 969
esp_mqtt_client_config_t::username (*C++ member*), 968
esp_mqtt_client_destroy (*C++ function*), 966
esp_mqtt_client_disconnect (*C++ function*), 965
esp_mqtt_client_enqueue (*C++ function*), 966
esp_mqtt_client_get_outbox_size (*C++ function*), 966
esp_mqtt_client_handle_t (*C++ type*), 970
esp_mqtt_client_init (*C++ function*), 964
esp_mqtt_client_publish (*C++ function*), 965
esp_mqtt_client_reconnect (*C++ function*), 964
esp_mqtt_client_register_event (*C++ function*), 966
esp_mqtt_client_set_uri (*C++ function*), 964

esp_mqtt_client_start (C++ function), 964
esp_mqtt_client_stop (C++ function), 965
esp_mqtt_client_subscribe (C++ function), 965
esp_mqtt_client_unsubscribe (C++ function), 965
esp_mqtt_connect_return_code_t (C++ enum), 972
esp_mqtt_error_codes (C++ class), 967
esp_mqtt_error_codes::connect_return_code (C++ member), 967
esp_mqtt_error_codes::error_type (C++ member), 967
esp_mqtt_error_codes::esp_tls_cert_verify_flags (C++ member), 967
esp_mqtt_error_codes::esp_tls_last_esp_err (C++ member), 967
esp_mqtt_error_codes::esp_tls_stack_err (C++ member), 967
esp_mqtt_error_codes::esp_transport_sock_errno (C++ member), 967
esp_mqtt_error_codes_t (C++ type), 970
esp_mqtt_error_type_t (C++ enum), 972
esp_mqtt_event_handle_t (C++ type), 971
esp_mqtt_event_id_t (C++ enum), 971
esp_mqtt_event_t (C++ class), 967
esp_mqtt_event_t::client (C++ member), 967
esp_mqtt_event_t::current_data_offset (C++ member), 968
esp_mqtt_event_t::data (C++ member), 967
esp_mqtt_event_t::data_len (C++ member), 967
esp_mqtt_event_t::dup (C++ member), 968
esp_mqtt_event_t::error_handle (C++ member), 968
esp_mqtt_event_t::event_id (C++ member), 967
esp_mqtt_event_t::msg_id (C++ member), 968
esp_mqtt_event_t::qos (C++ member), 968
esp_mqtt_event_t::retain (C++ member), 968
esp_mqtt_event_t::session_present (C++ member), 968
esp_mqtt_event_t::topic (C++ member), 968
esp_mqtt_event_t::topic_len (C++ member), 968
esp_mqtt_event_t::total_data_len (C++ member), 967
esp_mqtt_event_t::user_context (C++ member), 967
esp_mqtt_protocol_ver_t (C++ enum), 972
esp_mqtt_set_config (C++ function), 966
esp_mqtt_transport_t (C++ enum), 972
esp_netif_action_connected (C++ function), 647
esp_netif_action_disconnected (C++ function), 647
esp_netif_action_got_ip (C++ function), 647
esp_netif_action_start (C++ function), 647
esp_netif_action_stop (C++ function), 647
esp_netif_attach (C++ function), 646
esp_netif_attach_wifi_ap (C++ function), 655
esp_netif_attach_wifi_station (C++ function), 655
esp_netif_create_default_wifi_ap (C++ function), 655
esp_netif_create_default_wifi_mesh_netifs (C++ function), 656
esp_netif_create_default_wifi_sta (C++ function), 656
esp_netif_create_ip6_linklocal (C++ function), 652
esp_netif_create_wifi (C++ function), 656
esp_netif_deinit (C++ function), 646
esp_netif_destroy (C++ function), 646
esp_netif_dhcpc_get_status (C++ function), 651
esp_netif_dhcpc_option (C++ function), 650
esp_netif_dhcpc_start (C++ function), 650
esp_netif_dhcpc_stop (C++ function), 651
esp_netif_dhcps_get_status (C++ function), 651
esp_netif_dhcps_option (C++ function), 650
esp_netif_dhcps_start (C++ function), 651
esp_netif_dhcps_stop (C++ function), 651
esp_netif_free_rx_buffer (C++ function), 659
esp_netif_get_all_ip6 (C++ function), 653
esp_netif_get_desc (C++ function), 654
esp_netif_get_dns_info (C++ function), 652
esp_netif_get_event_id (C++ function), 654
esp_netif_get_flags (C++ function), 654
esp_netif_get_handle_from_ifkey (C++ function), 654
esp_netif_get_handle_from_netif_impl (C++ function), 659
esp_netif_get_hostname (C++ function), 648
esp_netif_get_ifkey (C++ function), 654
esp_netif_get_io_driver (C++ function), 654
esp_netif_get_ip6_global (C++ function), 652
esp_netif_get_ip6_linklocal (C++ function), 652
esp_netif_get_ip_info (C++ function), 648
esp_netif_get_mac (C++ function), 648
esp_netif_get_netif_impl (C++ function), 659
esp_netif_get_netif_impl_index (C++ function), 649
esp_netif_get_netif_impl_name (C++ function), 650
esp_netif_get_nr_of_ifs (C++ function), 654
esp_netif_get_old_ip_info (C++ function),

649
esp_netif_get_route_prio (C++ function), 654
esp_netif_init (C++ function), 646
esp_netif_is_netif_up (C++ function), 648
esp_netif_netstack_buf_free (C++ function), 655
esp_netif_netstack_buf_ref (C++ function), 654
esp_netif_new (C++ function), 646
esp_netif_next (C++ function), 654
esp_netif_receive (C++ function), 646
esp_netif_set_dns_info (C++ function), 651
esp_netif_set_driver_config (C++ function), 646
esp_netif_set_hostname (C++ function), 648
esp_netif_set_ip4_addr (C++ function), 653
esp_netif_set_ip_info (C++ function), 649
esp_netif_set_mac (C++ function), 648
esp_netif_set_old_ip_info (C++ function), 649
esp_netif_str_to_ip4 (C++ function), 653
esp_netif_str_to_ip6 (C++ function), 653
esp_netif_transmit (C++ function), 659
esp_netif_transmit_wrap (C++ function), 659
esp_nimble_hci_and_controller_deinit (C++ function), 332
esp_nimble_hci_and_controller_init (C++ function), 331
esp_nimble_hci_deinit (C++ function), 331
esp_nimble_hci_init (C++ function), 331
esp_now_add_peer (C++ function), 590
esp_now_deinit (C++ function), 589
esp_now_del_peer (C++ function), 591
ESP_NOW_ETH_ALEN (C 宏), 593
esp_now_fetch_peer (C++ function), 591
esp_now_get_peer (C++ function), 591
esp_now_get_peer_num (C++ function), 592
esp_now_get_version (C++ function), 589
esp_now_init (C++ function), 589
esp_now_is_peer_exist (C++ function), 591
ESP_NOW_KEY_LEN (C 宏), 593
ESP_NOW_MAX_DATA_LEN (C 宏), 593
ESP_NOW_MAX_ENCRYPT_PEER_NUM (C 宏), 593
ESP_NOW_MAX_TOTAL_PEER_NUM (C 宏), 593
esp_now_mod_peer (C++ function), 591
esp_now_peer_info (C++ class), 592
esp_now_peer_info::channel (C++ member), 592
esp_now_peer_info::encrypt (C++ member), 593
esp_now_peer_info::ifidx (C++ member), 592
esp_now_peer_info::lmk (C++ member), 592
esp_now_peer_info::peer_addr (C++ member), 592
esp_now_peer_info::priv (C++ member), 593
esp_now_peer_info_t (C++ type), 594
esp_now_peer_num (C++ class), 593
esp_now_peer_num::encrypt_num (C++ member), 593
esp_now_peer_num::total_num (C++ member), 593
esp_now_peer_num_t (C++ type), 594
esp_now_recv_cb_t (C++ type), 594
esp_now_register_recv_cb (C++ function), 589
esp_now_register_send_cb (C++ function), 590
esp_now_send (C++ function), 590
esp_now_send_cb_t (C++ type), 594
ESP_NOW_SEND_FAIL (C++ enumerator), 594
esp_now_send_status_t (C++ enum), 594
ESP_NOW_SEND_SUCCESS (C++ enumerator), 594
esp_now_set_pmk (C++ function), 592
esp_now_set_wake_window (C++ function), 592
esp_now_unregister_recv_cb (C++ function), 590
esp_now_unregister_send_cb (C++ function), 590
ESP_OK (C 宏), 1148
ESP_OK_EFUSE_CNT (C 宏), 1147
esp_ota_abort (C++ function), 1336
esp_ota_begin (C++ function), 1335
esp_ota_check_rollback_is_possible (C++ function), 1338
esp_ota_end (C++ function), 1336
esp_ota_erase_last_boot_app_partition (C++ function), 1338
esp_ota_get_app_description (C++ function), 1335
esp_ota_get_app_elf_sha256 (C++ function), 1335
esp_ota_get_boot_partition (C++ function), 1337
esp_ota_get_last_invalid_partition (C++ function), 1338
esp_ota_get_next_update_partition (C++ function), 1337
esp_ota_get_partition_description (C++ function), 1337
esp_ota_get_running_partition (C++ function), 1337
esp_ota_get_state_partition (C++ function), 1338
esp_ota_handle_t (C++ type), 1339
esp_ota_mark_app_invalid_rollback_and_reboot (C++ function), 1338
esp_ota_mark_app_valid_cancel_rollback (C++ function), 1338
esp_ota_set_boot_partition (C++ function), 1336
esp_ota_write (C++ function), 1335
esp_ota_write_with_offset (C++ function), 1336
esp_partition_check_identity (C++ func-

tion), 1052
esp_partition_deregister_external (C++ function), 1052
esp_partition_erase_range (C++ function), 1051
esp_partition_find (C++ function), 1048
esp_partition_find_first (C++ function), 1049
esp_partition_get (C++ function), 1049
esp_partition_get_sha256 (C++ function), 1051
esp_partition_iterator_release (C++ function), 1049
esp_partition_iterator_t (C++ type), 1053
esp_partition_mmap (C++ function), 1051
esp_partition_next (C++ function), 1049
esp_partition_read (C++ function), 1049
esp_partition_read_raw (C++ function), 1050
esp_partition_register_external (C++ function), 1052
ESP_PARTITION_SUBTYPE_ANY (C++ enumerator), 1055
ESP_PARTITION_SUBTYPE_APP_FACTORY (C++ enumerator), 1053
ESP_PARTITION_SUBTYPE_APP_OTA_0 (C++ enumerator), 1054
ESP_PARTITION_SUBTYPE_APP_OTA_1 (C++ enumerator), 1054
ESP_PARTITION_SUBTYPE_APP_OTA_10 (C++ enumerator), 1054
ESP_PARTITION_SUBTYPE_APP_OTA_11 (C++ enumerator), 1054
ESP_PARTITION_SUBTYPE_APP_OTA_12 (C++ enumerator), 1054
ESP_PARTITION_SUBTYPE_APP_OTA_13 (C++ enumerator), 1054
ESP_PARTITION_SUBTYPE_APP_OTA_14 (C++ enumerator), 1054
ESP_PARTITION_SUBTYPE_APP_OTA_15 (C++ enumerator), 1054
ESP_PARTITION_SUBTYPE_APP_OTA_2 (C++ enumerator), 1054
ESP_PARTITION_SUBTYPE_APP_OTA_3 (C++ enumerator), 1054
ESP_PARTITION_SUBTYPE_APP_OTA_4 (C++ enumerator), 1054
ESP_PARTITION_SUBTYPE_APP_OTA_5 (C++ enumerator), 1054
ESP_PARTITION_SUBTYPE_APP_OTA_6 (C++ enumerator), 1054
ESP_PARTITION_SUBTYPE_APP_OTA_7 (C++ enumerator), 1054
ESP_PARTITION_SUBTYPE_APP_OTA_8 (C++ enumerator), 1054
ESP_PARTITION_SUBTYPE_APP_OTA_9 (C++ enumerator), 1054
ESP_PARTITION_SUBTYPE_APP_OTA_MAX (C++ enumerator), 1054
ESP_PARTITION_SUBTYPE_APP_OTA_MIN (C++ enumerator), 1054
ESP_PARTITION_SUBTYPE_APP_TEST (C++ enumerator), 1054
ESP_PARTITION_SUBTYPE_DATA_COREDUMP (C++ enumerator), 1054
ESP_PARTITION_SUBTYPE_DATA_EFUSE_EM (C++ enumerator), 1055
ESP_PARTITION_SUBTYPE_DATA_ESPHTTPD (C++ enumerator), 1055
ESP_PARTITION_SUBTYPE_DATA_FAT (C++ enumerator), 1055
ESP_PARTITION_SUBTYPE_DATA_NVS (C++ enumerator), 1054
ESP_PARTITION_SUBTYPE_DATA_NVS_KEYS (C++ enumerator), 1055
ESP_PARTITION_SUBTYPE_DATA_OTA (C++ enumerator), 1054
ESP_PARTITION_SUBTYPE_DATA_PHY (C++ enumerator), 1054
ESP_PARTITION_SUBTYPE_DATA_SPIFFS (C++ enumerator), 1055
ESP_PARTITION_SUBTYPE_DATA_UNDEFINED (C++ enumerator), 1055
ESP_PARTITION_SUBTYPE_OTA (C 宏), 1053
esp_partition_subtype_t (C++ enum), 1053
esp_partition_t (C++ class), 1052
esp_partition_t::address (C++ member), 1053
esp_partition_t::encrypted (C++ member), 1053
esp_partition_t::flash_chip (C++ member), 1053
esp_partition_t::label (C++ member), 1053
esp_partition_t::size (C++ member), 1053
esp_partition_t::subtype (C++ member), 1053
esp_partition_t::type (C++ member), 1053
ESP_PARTITION_TYPE_APP (C++ enumerator), 1053
ESP_PARTITION_TYPE_DATA (C++ enumerator), 1053
esp_partition_type_t (C++ enum), 1053
esp_partition_verify (C++ function), 1049
esp_partition_write (C++ function), 1050
esp_partition_write_raw (C++ function), 1050
ESP_PD_DOMAIN_MAX (C++ enumerator), 1355
ESP_PD_DOMAIN_RTC8M (C++ enumerator), 1355
ESP_PD_DOMAIN_RTC_FAST_MEM (C++ enumerator), 1355
ESP_PD_DOMAIN_RTC_PERIPH (C++ enumerator), 1355
ESP_PD_DOMAIN_RTC_SLOW_MEM (C++ enumerator), 1355
ESP_PD_DOMAIN_VDDSDIO (C++ enumerator), 1355
ESP_PD_DOMAIN_XTAL (C++ enumerator), 1355

ESP_PD_OPTION_AUTO (C++ enumerator), 1355
ESP_PD_OPTION_OFF (C++ enumerator), 1355
ESP_PD_OPTION_ON (C++ enumerator), 1355
esp_ping_callbacks_t (C++ class), 959
esp_ping_callbacks_t::cb_args (C++ member), 959
esp_ping_callbacks_t::on_ping_end (C++ member), 959
esp_ping_callbacks_t::on_ping_success (C++ member), 959
esp_ping_callbacks_t::on_ping_timeout (C++ member), 959
esp_ping_config_t (C++ class), 959
esp_ping_config_t::count (C++ member), 959
esp_ping_config_t::data_size (C++ member), 960
esp_ping_config_t::interface (C++ member), 960
esp_ping_config_t::interval_ms (C++ member), 959
esp_ping_config_t::target_addr (C++ member), 960
esp_ping_config_t::task_prio (C++ member), 960
esp_ping_config_t::task_stack_size (C++ member), 960
esp_ping_config_t::timeout_ms (C++ member), 960
esp_ping_config_t::tos (C++ member), 960
esp_ping_config_t::ttl (C++ member), 960
ESP_PING_COUNT_INFINITE (C 宏), 960
ESP_PING_DEFAULT_CONFIG (C 宏), 960
esp_ping_delete_session (C++ function), 958
esp_ping_get_profile (C++ function), 959
esp_ping_handle_t (C++ type), 960
esp_ping_new_session (C++ function), 958
ESP_PING_PROF_DURATION (C++ enumerator), 961
ESP_PING_PROF_IPADDR (C++ enumerator), 960
ESP_PING_PROF_REPLY (C++ enumerator), 960
ESP_PING_PROF_REQUEST (C++ enumerator), 960
ESP_PING_PROF_SEQNO (C++ enumerator), 960
ESP_PING_PROF_SIZE (C++ enumerator), 960
ESP_PING_PROF_TIMEGAP (C++ enumerator), 960
ESP_PING_PROF_TOS (C++ enumerator), 960
ESP_PING_PROF_TTL (C++ enumerator), 960
esp_ping_profile_t (C++ enum), 960
esp_ping_start (C++ function), 959
esp_ping_stop (C++ function), 959
ESP_PM_APB_FREQ_MAX (C++ enumerator), 1346
esp_pm_config_esp32_t (C++ class), 1346
esp_pm_config_esp32_t::light_sleep_enable (C++ member), 1347
esp_pm_config_esp32_t::max_freq_mhz (C++ member), 1347
esp_pm_config_esp32_t::min_freq_mhz (C++ member), 1347
esp_pm_configure (C++ function), 1344
ESP_PM_CPU_FREQ_MAX (C++ enumerator), 1346
esp_pm_dump_locks (C++ function), 1346
esp_pm_get_configuration (C++ function), 1344
esp_pm_lock_acquire (C++ function), 1345
esp_pm_lock_create (C++ function), 1345
esp_pm_lock_delete (C++ function), 1345
esp_pm_lock_handle_t (C++ type), 1346
esp_pm_lock_release (C++ function), 1345
esp_pm_lock_type_t (C++ enum), 1346
ESP_PM_NO_LIGHT_SLEEP (C++ enumerator), 1346
esp_power_level_t (C++ enum), 153
esp_pthread_cfg_t (C++ class), 1154
esp_pthread_cfg_t::inherit_cfg (C++ member), 1155
esp_pthread_cfg_t::pin_to_core (C++ member), 1155
esp_pthread_cfg_t::prio (C++ member), 1154
esp_pthread_cfg_t::stack_size (C++ member), 1154
esp_pthread_cfg_t::thread_name (C++ member), 1155
esp_pthread_get_cfg (C++ function), 1154
esp_pthread_get_default_config (C++ function), 1154
esp_pthread_init (C++ function), 1154
esp_pthread_set_cfg (C++ function), 1154
ESP_PWR_LVL_N0 (C++ enumerator), 154
ESP_PWR_LVL_N11 (C++ enumerator), 154
ESP_PWR_LVL_N12 (C++ enumerator), 154
ESP_PWR_LVL_N14 (C++ enumerator), 154
ESP_PWR_LVL_N2 (C++ enumerator), 154
ESP_PWR_LVL_N3 (C++ enumerator), 154
ESP_PWR_LVL_N5 (C++ enumerator), 154
ESP_PWR_LVL_N6 (C++ enumerator), 154
ESP_PWR_LVL_N8 (C++ enumerator), 154
ESP_PWR_LVL_N9 (C++ enumerator), 154
ESP_PWR_LVL_P1 (C++ enumerator), 154
ESP_PWR_LVL_P3 (C++ enumerator), 154
ESP_PWR_LVL_P4 (C++ enumerator), 154
ESP_PWR_LVL_P6 (C++ enumerator), 154
ESP_PWR_LVL_P7 (C++ enumerator), 154
ESP_PWR_LVL_P9 (C++ enumerator), 154
esp_random (C++ function), 1326
esp_read_mac (C++ function), 1327
esp_register_freertos_idle_hook (C++ function), 1279
esp_register_freertos_idle_hook_for_cpu (C++ function), 1279
esp_register_freertos_tick_hook (C++ function), 1280
esp_register_freertos_tick_hook_for_cpu (C++ function), 1279
esp_register_shutdown_handler (C++ function), 1325

esp_reset_reason (C++ function), 1325
esp_reset_reason_t (C++ enum), 1328
esp_restart (C++ function), 1325
esp_rom_delay_us (C++ function), 1364
esp_rom_disable_logging (C++ function), 1364
esp_rom_install_channel_putc (C++ function), 1364
esp_rom_install_uart_printf (C++ function), 1364
esp_rom_printf (C++ function), 1364
ESP_RST_BROWNOUT (C++ enumerator), 1329
ESP_RST_DEEPSLEEP (C++ enumerator), 1329
ESP_RST_EXT (C++ enumerator), 1328
ESP_RST_INT_WDT (C++ enumerator), 1328
ESP_RST_PANIC (C++ enumerator), 1328
ESP_RST_POWERON (C++ enumerator), 1328
ESP_RST_SDIO (C++ enumerator), 1329
ESP_RST_SW (C++ enumerator), 1328
ESP_RST_TASK_WDT (C++ enumerator), 1329
ESP_RST_UNKNOWN (C++ enumerator), 1328
ESP_RST_WDT (C++ enumerator), 1329
ESP_SCO_DATA_PATH_HCI (C++ enumerator), 154
ESP_SCO_DATA_PATH_PCM (C++ enumerator), 154
esp_sco_data_path_t (C++ enum), 154
esp_service_source_t (C++ enum), 215
esp_set_deep_sleep_wake_stub (C++ function), 1354
esp_sleep_config_gpio_isolate (C++ function), 1354
esp_sleep_disable_wakeup_source (C++ function), 1351
esp_sleep_disable_wifi_wakeup (C++ function), 1353
esp_sleep_enable_ext0_wakeup (C++ function), 1351
esp_sleep_enable_ext1_wakeup (C++ function), 1352
esp_sleep_enable_gpio_switch (C++ function), 1354
esp_sleep_enable_gpio_wakeup (C++ function), 1352
esp_sleep_enable_timer_wakeup (C++ function), 1351
esp_sleep_enable_touchpad_wakeup (C++ function), 1351
esp_sleep_enable_uart_wakeup (C++ function), 1352
esp_sleep_enable_ulp_wakeup (C++ function), 1351
esp_sleep_enable_wifi_wakeup (C++ function), 1353
esp_sleep_ext1_wakeup_mode_t (C++ enum), 1355
esp_sleep_get_ext1_wakeup_status (C++ function), 1353
esp_sleep_get_touchpad_wakeup_status (C++ function), 1351
esp_sleep_get_wakeup_cause (C++ function), 1354
esp_sleep_is_valid_wakeup_gpio (C++ function), 1351
esp_sleep_pd_config (C++ function), 1353
esp_sleep_pd_domain_t (C++ enum), 1355
esp_sleep_pd_option_t (C++ enum), 1355
esp_sleep_source_t (C++ enum), 1355
ESP_SLEEP_WAKEUP_ALL (C++ enumerator), 1355
ESP_SLEEP_WAKEUP_BT (C++ enumerator), 1356
esp_sleep_wakeup_cause_t (C++ type), 1354
ESP_SLEEP_WAKEUP_COCPU (C++ enumerator), 1356
ESP_SLEEP_WAKEUP_COCPU_TRAP_TRIG (C++ enumerator), 1356
ESP_SLEEP_WAKEUP_EXT0 (C++ enumerator), 1355
ESP_SLEEP_WAKEUP_EXT1 (C++ enumerator), 1355
ESP_SLEEP_WAKEUP_GPIO (C++ enumerator), 1356
ESP_SLEEP_WAKEUP_TIMER (C++ enumerator), 1355
ESP_SLEEP_WAKEUP_TOUCHPAD (C++ enumerator), 1356
ESP_SLEEP_WAKEUP_UART (C++ enumerator), 1356
ESP_SLEEP_WAKEUP_ULP (C++ enumerator), 1356
ESP_SLEEP_WAKEUP_UNDEFINED (C++ enumerator), 1355
ESP_SLEEP_WAKEUP_WIFI (C++ enumerator), 1356
esp_smartconfig_fast_mode (C++ function), 586
esp_smartconfig_get_rvd_data (C++ function), 586
esp_smartconfig_get_version (C++ function), 585
esp_smartconfig_set_type (C++ function), 586
esp_smartconfig_start (C++ function), 585
esp_smartconfig_stop (C++ function), 585
esp_spiffs_format (C++ function), 1110
esp_spiffs_info (C++ function), 1110
esp_spiffs_mounted (C++ function), 1110
ESP_SPP_BUSY (C++ enumerator), 300
esp_spp_cb_event_t (C++ enum), 301
esp_spp_cb_param_t (C++ union), 295
esp_spp_cb_param_t::cl_init (C++ member), 296
esp_spp_cb_param_t::close (C++ member), 296
esp_spp_cb_param_t::cong (C++ member), 296
esp_spp_cb_param_t::data_ind (C++ member), 296
esp_spp_cb_param_t::disc_comp (C++ member), 296

esp_spp_cb_param_t::init (*C++ member*), 296
esp_spp_cb_param_t::open (*C++ member*), 296
esp_spp_cb_param_t::spp_cl_init_evt_param (*C++ class*), 296
esp_spp_cb_param_t::spp_cl_init_evt_param::fd (*C++ member*), 296
esp_spp_cb_param_t::spp_cl_init_evt_param::handle (*C++ member*), 296
esp_spp_cb_param_t::spp_cl_init_evt_param::sec_id (*C++ member*), 296
esp_spp_cb_param_t::spp_cl_init_evt_param::status (*C++ member*), 296
esp_spp_cb_param_t::spp_close_evt_param (*C++ class*), 296
esp_spp_cb_param_t::spp_close_evt_param::async (*C++ member*), 297
esp_spp_cb_param_t::spp_close_evt_param::handle (*C++ member*), 296
esp_spp_cb_param_t::spp_close_evt_param::port_status (*C++ member*), 296
esp_spp_cb_param_t::spp_cong_evt_param (*C++ class*), 297
esp_spp_cb_param_t::spp_cong_evt_param::cong (*C++ member*), 297
esp_spp_cb_param_t::spp_cong_evt_param::handle (*C++ member*), 297
esp_spp_cb_param_t::spp_cong_evt_param::status (*C++ member*), 297
esp_spp_cb_param_t::spp_data_ind_evt_param (*C++ class*), 297
esp_spp_cb_param_t::spp_data_ind_evt_param::data (*C++ member*), 297
esp_spp_cb_param_t::spp_data_ind_evt_param::handle (*C++ member*), 297
esp_spp_cb_param_t::spp_data_ind_evt_param::len (*C++ member*), 297
esp_spp_cb_param_t::spp_data_ind_evt_param::status (*C++ member*), 297
esp_spp_cb_param_t::spp_discovery_comp_evt_param (*C++ class*), 297
esp_spp_cb_param_t::spp_discovery_comp_evt_param::scn_num (*C++ member*), 297
esp_spp_cb_param_t::spp_discovery_comp_evt_param::service_name (*C++ member*), 297
esp_spp_cb_param_t::spp_discovery_comp_evt_param::status (*C++ member*), 297
esp_spp_cb_param_t::spp_init_evt_param (*C++ class*), 297
esp_spp_cb_param_t::spp_init_evt_param::status (*C++ member*), 298
esp_spp_cb_param_t::spp_open_evt_param (*C++ class*), 298
esp_spp_cb_param_t::spp_open_evt_param::fd (*C++ member*), 298
esp_spp_cb_param_t::spp_open_evt_param::handle (*C++ member*), 298
esp_spp_cb_param_t::spp_open_evt_param::rem_bda (*C++ member*), 298
esp_spp_cb_param_t::spp_open_evt_param::status (*C++ member*), 298
esp_spp_cb_param_t::spp_srv_open_evt_param (*C++ class*), 298
esp_spp_cb_param_t::spp_srv_open_evt_param::fd (*C++ member*), 298
esp_spp_cb_param_t::spp_srv_open_evt_param::handl (*C++ member*), 298
esp_spp_cb_param_t::spp_srv_open_evt_param::new_l (*C++ member*), 298
esp_spp_cb_param_t::spp_srv_open_evt_param::rem_b (*C++ member*), 298
esp_spp_cb_param_t::spp_srv_open_evt_param::statu (*C++ member*), 298
esp_spp_cb_param_t::spp_srv_stop_evt_param (*C++ class*), 298
esp_spp_cb_param_t::spp_srv_stop_evt_param::scn (*C++ member*), 298
esp_spp_cb_param_t::spp_srv_stop_evt_param::statu (*C++ member*), 298
esp_spp_cb_param_t::spp_start_evt_param (*C++ class*), 298
esp_spp_cb_param_t::spp_start_evt_param::handle (*C++ member*), 299
esp_spp_cb_param_t::spp_start_evt_param::scn (*C++ member*), 299
esp_spp_cb_param_t::spp_start_evt_param::sec_id (*C++ member*), 299
esp_spp_cb_param_t::spp_start_evt_param::status (*C++ member*), 299
esp_spp_cb_param_t::spp_start_evt_param::use_co (*C++ member*), 299
esp_spp_cb_param_t::spp_uninit_evt_param (*C++ class*), 299
esp_spp_cb_param_t::spp_uninit_evt_param::status (*C++ member*), 299
esp_spp_cb_param_t::spp_write_evt_param (*C++ class*), 299
esp_spp_cb_param_t::spp_write_evt_param::cong (*C++ member*), 299
esp_spp_cb_param_t::spp_write_evt_param::handle (*C++ member*), 299
esp_spp_cb_param_t::spp_write_evt_param::len (*C++ member*), 299
esp_spp_cb_param_t::spp_write_evt_param::status (*C++ member*), 299
esp_spp_cb_param_t::srv_open (*C++ member*), 296
esp_spp_cb_param_t::srv_stop (*C++ member*), 296
esp_spp_cb_param_t::start (*C++ member*), 296

esp_spp_cb_param_t::uninit (C++ member), 296
esp_spp_cb_param_t::write (C++ member), 296
esp_spp_cb_t (C++ type), 300
ESP_SPP_CL_INIT_EVT (C++ enumerator), 301
ESP_SPP_CLOSE_EVT (C++ enumerator), 301
ESP_SPP_CONG_EVT (C++ enumerator), 301
esp_spp_connect (C++ function), 294
ESP_SPP_DATA_IND_EVT (C++ enumerator), 301
esp_spp_deinit (C++ function), 294
esp_spp_disconnect (C++ function), 294
ESP_SPP_DISCOVERY_COMP_EVT (C++ enumerator), 301
ESP_SPP_FAILURE (C++ enumerator), 300
esp_spp_init (C++ function), 293
ESP_SPP_INIT_EVT (C++ enumerator), 301
ESP_SPP_MAX_MTU (C 宏), 300
ESP_SPP_MAX_SCN (C 宏), 300
ESP_SPP_MODE_CB (C++ enumerator), 300
esp_spp_mode_t (C++ enum), 300
ESP_SPP_MODE_VFS (C++ enumerator), 300
ESP_SPP_NEED_DEINIT (C++ enumerator), 300
ESP_SPP_NEED_INIT (C++ enumerator), 300
ESP_SPP_NO_CONNECTION (C++ enumerator), 300
ESP_SPP_NO_DATA (C++ enumerator), 300
ESP_SPP_NO_RESOURCE (C++ enumerator), 300
ESP_SPP_NO_SERVER (C++ enumerator), 300
ESP_SPP_OPEN_EVT (C++ enumerator), 301
esp_spp_register_callback (C++ function), 293
ESP_SPP_ROLE_MASTER (C++ enumerator), 300
ESP_SPP_ROLE_SLAVE (C++ enumerator), 300
esp_spp_role_t (C++ enum), 300
ESP_SPP_SEC_AUTHENTICATE (C 宏), 299
ESP_SPP_SEC_AUTHORIZE (C 宏), 299
ESP_SPP_SEC_ENCRYPT (C 宏), 299
ESP_SPP_SEC_IN_16_DIGITS (C 宏), 299
ESP_SPP_SEC_MITM (C 宏), 299
ESP_SPP_SEC_MODE4_LEVEL4 (C 宏), 299
ESP_SPP_SEC_NONE (C 宏), 299
esp_spp_sec_t (C++ type), 300
ESP_SPP_SRV_OPEN_EVT (C++ enumerator), 301
ESP_SPP_SRV_STOP_EVT (C++ enumerator), 301
esp_spp_start_discovery (C++ function), 294
ESP_SPP_START_EVT (C++ enumerator), 301
esp_spp_start_srv (C++ function), 294
esp_spp_status_t (C++ enum), 300
esp_spp_stop_srv (C++ function), 295
esp_spp_stop_srv_scn (C++ function), 295
ESP_SPP_SUCCESS (C++ enumerator), 300
ESP_SPP_UNINIT_EVT (C++ enumerator), 301
esp_spp_vfs_register (C++ function), 295
esp_spp_write (C++ function), 295
ESP_SPP_WRITE_EVT (C++ enumerator), 301
esp_supp_dpp_bootstrap_gen (C++ function), 627
esp_supp_dpp_bootstrap_t (C++ type), 627
ESP_SUPP_DPP_CFG_RECVD (C++ enumerator), 628
esp_supp_dpp_deinit (C++ function), 627
esp_supp_dpp_event_cb_t (C++ type), 628
esp_supp_dpp_event_t (C++ enum), 628
ESP_SUPP_DPP_FAIL (C++ enumerator), 628
esp_supp_dpp_init (C++ function), 627
esp_supp_dpp_start_listen (C++ function), 627
esp_supp_dpp_stop_listen (C++ function), 627
ESP_SUPP_DPP_URI_READY (C++ enumerator), 628
esp_system_abort (C++ function), 1327
esp_sysview_flush (C++ function), 1124
esp_sysview_heap_trace_alloc (C++ function), 1124
esp_sysview_heap_trace_free (C++ function), 1124
esp_sysview_heap_trace_start (C++ function), 1124
esp_sysview_heap_trace_stop (C++ function), 1124
esp_sysview_vprintf (C++ function), 1124
esp_task_wdt_add (C++ function), 1358
esp_task_wdt_deinit (C++ function), 1358
esp_task_wdt_delete (C++ function), 1359
esp_task_wdt_init (C++ function), 1358
esp_task_wdt_reset (C++ function), 1359
esp_task_wdt_status (C++ function), 1359
esp_timer_cb_t (C++ type), 1307
esp_timer_create (C++ function), 1305
esp_timer_create_args_t (C++ class), 1306
esp_timer_create_args_t::arg (C++ member), 1307
esp_timer_create_args_t::callback (C++ member), 1307
esp_timer_create_args_t::dispatch_method (C++ member), 1307
esp_timer_create_args_t::name (C++ member), 1307
esp_timer_create_args_t::skip_unhandled_events (C++ member), 1307
esp_timer_deinit (C++ function), 1305
esp_timer_delete (C++ function), 1306
esp_timer_dispatch_t (C++ enum), 1307
esp_timer_dump (C++ function), 1306
esp_timer_early_init (C++ function), 1304
esp_timer_get_next_alarm (C++ function), 1306
esp_timer_get_time (C++ function), 1306
esp_timer_handle_t (C++ type), 1307
esp_timer_init (C++ function), 1304
esp_timer_is_active (C++ function), 1306
esp_timer_start_once (C++ function), 1305
esp_timer_start_periodic (C++ function), 1305
esp_timer_stop (C++ function), 1305

ESP_TIMER_TASK (*C++ enumerator*), 1307
esp_tls (*C++ class*), 909
esp_tls::cacert (*C++ member*), 909
esp_tls::cacert_ptr (*C++ member*), 909
esp_tls::clientcert (*C++ member*), 909
esp_tls::clientkey (*C++ member*), 909
esp_tls::conf (*C++ member*), 909
esp_tls::conn_state (*C++ member*), 909
esp_tls::ctr_drbg (*C++ member*), 909
esp_tls::entropy (*C++ member*), 909
esp_tls::error_handle (*C++ member*), 910
esp_tls::is_tls (*C++ member*), 910
esp_tls::read (*C++ member*), 909
esp_tls::role (*C++ member*), 910
esp_tls::rset (*C++ member*), 910
esp_tls::server_fd (*C++ member*), 909
esp_tls::sockfd (*C++ member*), 909
esp_tls::ssl (*C++ member*), 909
esp_tls::write (*C++ member*), 909
esp_tls::wset (*C++ member*), 910
esp_tls_cfg (*C++ class*), 907
esp_tls_cfg::alpn_protos (*C++ member*), 908
esp_tls_cfg::cacert_buf (*C++ member*), 908
esp_tls_cfg::cacert_bytes (*C++ member*), 908
esp_tls_cfg::cacert_pem_buf (*C++ member*), 908
esp_tls_cfg::cacert_pem_bytes (*C++ member*), 908
esp_tls_cfg::clientcert_buf (*C++ member*), 908
esp_tls_cfg::clientcert_bytes (*C++ member*), 908
esp_tls_cfg::clientcert_pem_buf (*C++ member*), 908
esp_tls_cfg::clientcert_pem_bytes (*C++ member*), 908
esp_tls_cfg::clientkey_buf (*C++ member*), 908
esp_tls_cfg::clientkey_bytes (*C++ member*), 908
esp_tls_cfg::clientkey_password (*C++ member*), 908
esp_tls_cfg::clientkey_password_len (*C++ member*), 908
esp_tls_cfg::clientkey_pem_buf (*C++ member*), 908
esp_tls_cfg::clientkey_pem_bytes (*C++ member*), 908
esp_tls_cfg::common_name (*C++ member*), 909
esp_tls_cfg::crt_bundle_attach (*C++ member*), 909
esp_tls_cfg::ds_data (*C++ member*), 909
esp_tls_cfg::keep_alive_cfg (*C++ member*), 909
esp_tls_cfg::non_block (*C++ member*), 908
esp_tls_cfg::psk_hint_key (*C++ member*), 909
esp_tls_cfg::skip_common_name (*C++ member*), 909
esp_tls_cfg::timeout_ms (*C++ member*), 908
esp_tls_cfg::use_global_ca_store (*C++ member*), 908
esp_tls_cfg::use_secure_element (*C++ member*), 908
esp_tls_cfg_t (*C++ type*), 911
ESP_TLS_CLIENT (*C++ enumerator*), 912
esp_tls_conn_delete (*C++ function*), 905
esp_tls_conn_destroy (*C++ function*), 905
esp_tls_conn_http_new (*C++ function*), 904
esp_tls_conn_http_new_async (*C++ function*), 904
esp_tls_conn_new (*C++ function*), 903
esp_tls_conn_new_async (*C++ function*), 904
esp_tls_conn_new_sync (*C++ function*), 903
esp_tls_conn_read (*C++ function*), 905
esp_tls_conn_state (*C++ enum*), 912
esp_tls_conn_state_t (*C++ type*), 911
esp_tls_conn_write (*C++ function*), 904
ESP_TLS_CONNECTING (*C++ enumerator*), 912
ESP_TLS_DONE (*C++ enumerator*), 912
ESP_TLS_ERR_SSL_TIMEOUT (*C 宏*), 911
ESP_TLS_ERR_SSL_WANT_READ (*C 宏*), 911
ESP_TLS_ERR_SSL_WANT_WRITE (*C 宏*), 911
ESP_TLS_ERR_TYPE_ESP (*C++ enumerator*), 912
ESP_TLS_ERR_TYPE_MAX (*C++ enumerator*), 912
ESP_TLS_ERR_TYPE_MBEDTLS (*C++ enumerator*), 912
ESP_TLS_ERR_TYPE_MBEDTLS_CERT_FLAGS (*C++ enumerator*), 912
ESP_TLS_ERR_TYPE_SYSTEM (*C++ enumerator*), 912
ESP_TLS_ERR_TYPE_UNKNOWN (*C++ enumerator*), 912
ESP_TLS_ERR_TYPE_WOLFSSL (*C++ enumerator*), 912
ESP_TLS_ERR_TYPE_WOLFSSL_CERT_FLAGS (*C++ enumerator*), 912
esp_tls_error_handle_t (*C++ type*), 911
esp_tls_error_type_t (*C++ enum*), 912
ESP_TLS_FAIL (*C++ enumerator*), 912
esp_tls_free_global_ca_store (*C++ function*), 906
esp_tls_get_and_clear_error_type (*C++ function*), 906
esp_tls_get_and_clear_last_error (*C++ function*), 906
esp_tls_get_bytes_avail (*C++ function*), 905
esp_tls_get_conn_sockfd (*C++ function*), 905
esp_tls_get_global_ca_store (*C++ function*), 906
ESP_TLS_HANDSHAKE (*C++ enumerator*), 912
ESP_TLS_INIT (*C++ enumerator*), 912
esp_tls_init (*C++ function*), 903

esp_tls_init_global_ca_store (C++ function), 905
esp_tls_last_error (C++ class), 907
esp_tls_last_error::esp_tls_error_code (C++ member), 907
esp_tls_last_error::esp_tls_flags (C++ member), 907
esp_tls_last_error::last_error (C++ member), 907
esp_tls_last_error_t (C++ type), 911
esp_tls_role (C++ enum), 912
esp_tls_role_t (C++ type), 911
ESP_TLS_SERVER (C++ enumerator), 912
esp_tls_set_global_ca_store (C++ function), 905
esp_tls_t (C++ type), 912
esp_unregister_shutdown_handler (C++ function), 1325
ESP_UUID_LEN_128 (C 宏), 156
ESP_UUID_LEN_16 (C 宏), 156
ESP_UUID_LEN_32 (C 宏), 156
esp_vendor_ie_cb_t (C++ type), 562
esp_vfs_close (C++ function), 1092
esp_vfs_dev_uart_port_set_rx_line_endings (C++ function), 1098
esp_vfs_dev_uart_port_set_tx_line_endings (C++ function), 1099
esp_vfs_dev_uart_register (C++ function), 1098
esp_vfs_dev_uart_set_rx_line_endings (C++ function), 1098
esp_vfs_dev_uart_set_tx_line_endings (C++ function), 1098
esp_vfs_dev_uart_use_driver (C++ function), 1099
esp_vfs_dev_uart_use_nonblocking (C++ function), 1099
esp_vfs_fat_mount_config_t (C++ class), 1101, 1105
esp_vfs_fat_mount_config_t::allocation_unit_size (C++ member), 1101, 1105
esp_vfs_fat_mount_config_t::format_if_mount_failed (C++ member), 1101, 1105
esp_vfs_fat_mount_config_t::max_files (C++ member), 1101, 1105
esp_vfs_fat_rawflash_mount (C++ function), 1102
esp_vfs_fat_rawflash_unmount (C++ function), 1102
esp_vfs_fat_register (C++ function), 1100
esp_vfs_fat_sdmmc_mount (C++ function), 1101
esp_vfs_fat_sdmmc_unmount (C++ function), 1102
esp_vfs_fat_spiflash_mount (C++ function), 1105
esp_vfs_fat_spiflash_unmount (C++ function), 1105
esp_vfs_fat_unregister_path (C++ function), 1100
ESP_VFS_FLAG_CONTEXT_PTR (C 宏), 1098
ESP_VFS_FLAG_DEFAULT (C 宏), 1098
esp_vfs_fstat (C++ function), 1092
esp_vfs_id_t (C++ type), 1098
esp_vfs_link (C++ function), 1092
esp_vfs_lseek (C++ function), 1091
esp_vfs_open (C++ function), 1091
ESP_VFS_PATH_MAX (C 宏), 1098
esp_vfs_pread (C++ function), 1093
esp_vfs_pwrite (C++ function), 1094
esp_vfs_read (C++ function), 1091
esp_vfs_register (C++ function), 1092
esp_vfs_register_fd (C++ function), 1092
esp_vfs_register_fd_range (C++ function), 1092
esp_vfs_register_with_id (C++ function), 1092
esp_vfs_rename (C++ function), 1092
esp_vfs_select (C++ function), 1093
esp_vfs_select_sem_t (C++ class), 1094
esp_vfs_select_sem_t::is_sem_local (C++ member), 1094
esp_vfs_select_sem_t::sem (C++ member), 1094
esp_vfs_select_triggered (C++ function), 1093
esp_vfs_select_triggered_isr (C++ function), 1093
esp_vfs_spiffs_conf_t (C++ class), 1110
esp_vfs_spiffs_conf_t::base_path (C++ member), 1111
esp_vfs_spiffs_conf_t::format_if_mount_failed (C++ member), 1111
esp_vfs_spiffs_conf_t::max_files (C++ member), 1111
esp_vfs_spiffs_conf_t::partition_label (C++ member), 1111
esp_vfs_spiffs_register (C++ function), 1110
esp_vfs_spiffs_unregister (C++ function), 1110
esp_vfs_stat (C++ function), 1092
esp_vfs_t (C++ class), 1094
esp_vfs_t::access (C++ member), 1096
esp_vfs_t::access_p (C++ member), 1096
esp_vfs_t::close (C++ member), 1095
esp_vfs_t::close_p (C++ member), 1095
esp_vfs_t::closedir (C++ member), 1096
esp_vfs_t::closedir_p (C++ member), 1096
esp_vfs_t::end_select (C++ member), 1097
esp_vfs_t::fcntl (C++ member), 1096
esp_vfs_t::fcntl_p (C++ member), 1096
esp_vfs_t::flags (C++ member), 1094
esp_vfs_t::fstat (C++ member), 1095
esp_vfs_t::fstat_p (C++ member), 1095
esp_vfs_t::fsync (C++ member), 1096

esp_vfs_t::fsync_p (C++ member), 1096
esp_vfs_t::get_socket_select_semaphore (C++ member), 1097
esp_vfs_t::ioctl (C++ member), 1096
esp_vfs_t::ioctl_p (C++ member), 1096
esp_vfs_t::link (C++ member), 1095
esp_vfs_t::link_p (C++ member), 1095
esp_vfs_t::lseek (C++ member), 1094
esp_vfs_t::lseek_p (C++ member), 1094
esp_vfs_t::mkdir (C++ member), 1096
esp_vfs_t::mkdir_p (C++ member), 1096
esp_vfs_t::open (C++ member), 1095
esp_vfs_t::open_p (C++ member), 1095
esp_vfs_t::opendir (C++ member), 1095
esp_vfs_t::opendir_p (C++ member), 1095
esp_vfs_t::pread (C++ member), 1095
esp_vfs_t::pread_p (C++ member), 1095
esp_vfs_t::pwrite (C++ member), 1095
esp_vfs_t::pwrite_p (C++ member), 1095
esp_vfs_t::read (C++ member), 1094
esp_vfs_t::read_p (C++ member), 1094
esp_vfs_t::readdir (C++ member), 1095
esp_vfs_t::readdir_p (C++ member), 1095
esp_vfs_t::readdir_r (C++ member), 1096
esp_vfs_t::readdir_r_p (C++ member), 1095
esp_vfs_t::rename (C++ member), 1095
esp_vfs_t::rename_p (C++ member), 1095
esp_vfs_t::rmdir (C++ member), 1096
esp_vfs_t::rmdir_p (C++ member), 1096
esp_vfs_t::seekdir (C++ member), 1096
esp_vfs_t::seekdir_p (C++ member), 1096
esp_vfs_t::socket_select (C++ member), 1097
esp_vfs_t::start_select (C++ member), 1097
esp_vfs_t::stat (C++ member), 1095
esp_vfs_t::stat_p (C++ member), 1095
esp_vfs_t::stop_socket_select (C++ member), 1097
esp_vfs_t::stop_socket_select_isr (C++ member), 1097
esp_vfs_t::tcdrain (C++ member), 1097
esp_vfs_t::tcdrain_p (C++ member), 1097
esp_vfs_t::tcflow (C++ member), 1097
esp_vfs_t::tcflow_p (C++ member), 1097
esp_vfs_t::tcflush (C++ member), 1097
esp_vfs_t::tcflush_p (C++ member), 1097
esp_vfs_t::tcgetattr (C++ member), 1097
esp_vfs_t::tcgetattr_p (C++ member), 1097
esp_vfs_t::tcgetsid (C++ member), 1097
esp_vfs_t::tcgetsid_p (C++ member), 1097
esp_vfs_t::tcsendbreak (C++ member), 1097
esp_vfs_t::tcsendbreak_p (C++ member), 1097
esp_vfs_t::tcsetattr (C++ member), 1097
esp_vfs_t::tcsetattr_p (C++ member), 1097
esp_vfs_t::telldir (C++ member), 1096
esp_vfs_t::telldir_p (C++ member), 1096
esp_vfs_t::truncate (C++ member), 1096
esp_vfs_t::truncate_p (C++ member), 1096
esp_vfs_t::unlink (C++ member), 1095
esp_vfs_t::unlink_p (C++ member), 1095
esp_vfs_t::utime (C++ member), 1096
esp_vfs_t::utime_p (C++ member), 1096
esp_vfs_t::write (C++ member), 1094
esp_vfs_t::write_p (C++ member), 1094
esp_vfs_unlink (C++ function), 1092
esp_vfs_unregister (C++ function), 1092
esp_vfs_unregister_fd (C++ function), 1093
esp_vfs_usb_serial_jtag_use_driver (C++ function), 1099
esp_vfs_usb_serial_jtag_use_nonblocking (C++ function), 1099
esp_vfs_utime (C++ function), 1092
esp_vfs_write (C++ function), 1091
esp_vhci_host_callback (C++ class), 152
esp_vhci_host_callback::notify_host_recv (C++ member), 152
esp_vhci_host_callback::notify_host_send_availabl (C++ member), 152
esp_vhci_host_callback_t (C++ type), 152
esp_vhci_host_check_send_available (C++ function), 148
esp_vhci_host_register_callback (C++ function), 149
esp_vhci_host_send_packet (C++ function), 148
esp_wake_deep_sleep (C++ function), 1354
esp_websocket_client_close (C++ function), 929
esp_websocket_client_close_with_code (C++ function), 929
esp_websocket_client_config_t (C++ class), 930
esp_websocket_client_config_t::buffer_size (C++ member), 931
esp_websocket_client_config_t::cert_len (C++ member), 931
esp_websocket_client_config_t::cert_pem (C++ member), 931
esp_websocket_client_config_t::client_cert (C++ member), 931
esp_websocket_client_config_t::client_cert_len (C++ member), 931
esp_websocket_client_config_t::client_key (C++ member), 931
esp_websocket_client_config_t::client_key_len (C++ member), 931
esp_websocket_client_config_t::disable_auto_recon (C++ member), 931
esp_websocket_client_config_t::disable_pingpong_d (C++ member), 931
esp_websocket_client_config_t::headers (C++ member), 931
esp_websocket_client_config_t::host (C++ member), 930

esp_websocket_client_config_t::keep_alive_count (C++ member), 932
esp_websocket_client_config_t::keep_alive_enable (C++ member), 932
esp_websocket_client_config_t::keep_alive_idle (C++ member), 932
esp_websocket_client_config_t::keep_alive_interval (C++ member), 932
esp_websocket_client_config_t::password (C++ member), 931
esp_websocket_client_config_t::path (C++ member), 931
esp_websocket_client_config_t::ping_interval_sec (C++ member), 932
esp_websocket_client_config_t::pingpong_timeout_sec (C++ member), 931
esp_websocket_client_config_t::port (C++ member), 930
esp_websocket_client_config_t::skip_cert_common_name_check (C++ member), 932
esp_websocket_client_config_t::subprotocol (C++ member), 931
esp_websocket_client_config_t::task_prio (C++ member), 931
esp_websocket_client_config_t::task_stack (C++ member), 931
esp_websocket_client_config_t::transport (C++ member), 931
esp_websocket_client_config_t::uri (C++ member), 930
esp_websocket_client_config_t::use_global_ca_store (C++ member), 931
esp_websocket_client_config_t::user_agent (C++ member), 931
esp_websocket_client_config_t::user_context (C++ member), 931
esp_websocket_client_config_t::username (C++ member), 930
esp_websocket_client_destroy (C++ function), 928
esp_websocket_client_handle_t (C++ type), 932
esp_websocket_client_init (C++ function), 928
esp_websocket_client_is_connected (C++ function), 929
esp_websocket_client_send (C++ function), 928
esp_websocket_client_send_bin (C++ function), 929
esp_websocket_client_send_text (C++ function), 929
esp_websocket_client_set_uri (C++ function), 928
esp_websocket_client_start (C++ function), 928
esp_websocket_client_stop (C++ function), 928
esp_websocket_event_data_t (C++ class), 930
esp_websocket_event_data_t::client (C++ member), 930
esp_websocket_event_data_t::data_len (C++ member), 930
esp_websocket_event_data_t::data_ptr (C++ member), 930
esp_websocket_event_data_t::op_code (C++ member), 930
esp_websocket_event_data_t::payload_len (C++ member), 930
esp_websocket_event_data_t::payload_offset (C++ member), 930
esp_websocket_event_data_t::user_context (C++ member), 930
esp_websocket_event_id_t (C++ enum), 932
esp_websocket_register_events (C++ function), 930
esp_websocket_transport_t (C++ enum), 932
esp_wifi_80211_tx (C++ function), 555
esp_wifi_ap_get_sta_aid (C++ function), 553
esp_wifi_ap_get_sta_list (C++ function), 553
esp_wifi_bt_power_domain_off (C++ function), 150
esp_wifi_bt_power_domain_on (C++ function), 150
esp_wifi_clear_ap_list (C++ function), 548
esp_wifi_clear_default_wifi_driver_and_handlers (C++ function), 655
esp_wifi_clear_fast_connect (C++ function), 547
esp_wifi_config_11b_rate (C++ function), 558
esp_wifi_config_80211_tx_rate (C++ function), 559
esp_wifi_config_espnow_rate (C++ function), 591
esp_wifi_connect (C++ function), 546
esp_wifi_deauth_sta (C++ function), 547
esp_wifi_deinit (C++ function), 545
esp_wifi_disable_pmf_config (C++ function), 559
esp_wifi_disconnect (C++ function), 547
esp_wifi_ftm_end_session (C++ function), 558
esp_wifi_ftm_initiate_session (C++ function), 557
esp_wifi_ftm_resp_set_offset (C++ function), 558
esp_wifi_get_ant (C++ function), 556
esp_wifi_get_ant_gpio (C++ function), 556
esp_wifi_get_bandwidth (C++ function), 549
esp_wifi_get_channel (C++ function), 550
esp_wifi_get_config (C++ function), 553
esp_wifi_get_country (C++ function), 550
esp_wifi_get_country_code (C++ function),

559
esp_wifi_get_event_mask (C++ function), 555
esp_wifi_get_inactive_time (C++ function), 557
esp_wifi_get_mac (C++ function), 551
esp_wifi_get_max_tx_power (C++ function), 554
esp_wifi_get_mode (C++ function), 546
esp_wifi_get_promiscuous (C++ function), 551
esp_wifi_get_promiscuous_ctrl_filter (C++ function), 552
esp_wifi_get_promiscuous_filter (C++ function), 552
esp_wifi_get_protocol (C++ function), 549
esp_wifi_get_ps (C++ function), 548
esp_wifi_get_tsf_time (C++ function), 556
esp_wifi_init (C++ function), 545
ESP_WIFI_MAX_CONN_NUM (C 宏), 575
esp_wifi_restore (C++ function), 546
esp_wifi_scan_get_ap_num (C++ function), 547
esp_wifi_scan_get_ap_records (C++ function), 548
esp_wifi_scan_start (C++ function), 547
esp_wifi_scan_stop (C++ function), 547
esp_wifi_set_ant (C++ function), 556
esp_wifi_set_ant_gpio (C++ function), 556
esp_wifi_set_bandwidth (C++ function), 549
esp_wifi_set_channel (C++ function), 549
esp_wifi_set_config (C++ function), 552
esp_wifi_set_connectionless_wake_interval (C++ function), 558
esp_wifi_set_country (C++ function), 550
esp_wifi_set_country_code (C++ function), 558
esp_wifi_set_csi (C++ function), 555
esp_wifi_set_csi_config (C++ function), 555
esp_wifi_set_csi_rx_cb (C++ function), 555
esp_wifi_set_default_wifi_ap_handlers (C++ function), 655
esp_wifi_set_default_wifi_sta_handlers (C++ function), 655
esp_wifi_set_event_mask (C++ function), 554
esp_wifi_set_inactive_time (C++ function), 556
esp_wifi_set_mac (C++ function), 551
esp_wifi_set_max_tx_power (C++ function), 554
esp_wifi_set_mode (C++ function), 545
esp_wifi_set_promiscuous (C++ function), 551
esp_wifi_set_promiscuous_ctrl_filter (C++ function), 552
esp_wifi_set_promiscuous_filter (C++ function), 552
esp_wifi_set_promiscuous_rx_cb (C++ function), 551
esp_wifi_set_protocol (C++ function), 549
esp_wifi_set_ps (C++ function), 548
esp_wifi_set_rssi_threshold (C++ function), 557
esp_wifi_set_storage (C++ function), 553
esp_wifi_set_vendor_ie (C++ function), 553
esp_wifi_set_vendor_ie_cb (C++ function), 554
esp_wifi_sta_get_ap_info (C++ function), 548
esp_wifi_sta_get_rssi (C++ function), 559
esp_wifi_start (C++ function), 546
esp_wifi_statis_dump (C++ function), 557
esp_wifi_stop (C++ function), 546
essl_clear_intr (C++ function), 995
essl_get_intr (C++ function), 995
essl_get_intr_ena (C++ function), 996
essl_get_packet (C++ function), 994
essl_get_rx_data_size (C++ function), 993
essl_get_tx_buffer_num (C++ function), 993
essl_handle_t (C++ type), 996
essl_init (C++ function), 993
essl_read_reg (C++ function), 995
essl_reset_cnt (C++ function), 994
essl_sdio_config_t (C++ class), 997
essl_sdio_config_t::card (C++ member), 997
essl_sdio_config_t::recv_buffer_size (C++ member), 997
essl_sdio_deinit_dev (C++ function), 997
essl_sdio_init_dev (C++ function), 996
essl_send_packet (C++ function), 994
essl_send_slave_intr (C++ function), 996
essl_set_intr_ena (C++ function), 995
essl_spi_config_t (C++ class), 1001
essl_spi_config_t::rx_sync_reg (C++ member), 1001
essl_spi_config_t::spi (C++ member), 1001
essl_spi_config_t::tx_buf_size (C++ member), 1001
essl_spi_config_t::tx_sync_reg (C++ member), 1001
essl_spi_deinit_dev (C++ function), 997
essl_spi_get_packet (C++ function), 998
essl_spi_init_dev (C++ function), 997
essl_spi_rdbuf (C++ function), 998
essl_spi_rdbuf_polling (C++ function), 999
essl_spi_rddma (C++ function), 1000
essl_spi_rddma_done (C++ function), 1000
essl_spi_rddma_seg (C++ function), 1000
essl_spi_read_reg (C++ function), 997
essl_spi_reset_cnt (C++ function), 998
essl_spi_send_packet (C++ function), 998
essl_spi_wrbuf (C++ function), 999
essl_spi_wrbuf_polling (C++ function), 999
essl_spi_wrdma (C++ function), 1000
essl_spi_wrdma_done (C++ function), 1001
essl_spi_wrdma_seg (C++ function), 1001

essl_spi_write_reg (C++ function), 998
essl_wait_for_ready (C++ function), 993
essl_wait_int (C++ function), 995
essl_write_reg (C++ function), 994
eStandardSleep (C++ enumerator), 1193
eSuspended (C++ enumerator), 1193
eTaskGetState (C++ function), 1177
eTaskState (C++ enum), 1193
ETH_CMD_G_DUPLEX_MODE (C++ enumerator), 634
ETH_CMD_G_MAC_ADDR (C++ enumerator), 634
ETH_CMD_G_PHY_ADDR (C++ enumerator), 634
ETH_CMD_G_SPEED (C++ enumerator), 634
ETH_CMD_S_FLOW_CTRL (C++ enumerator), 634
ETH_CMD_S_MAC_ADDR (C++ enumerator), 634
ETH_CMD_S_PHY_ADDR (C++ enumerator), 634
ETH_CMD_S_PROMISCUOUS (C++ enumerator), 634
ETH_CRC_LEN (C 宏), 633
ETH_DEFAULT_CONFIG (C 宏), 632
ETH_DUPLEX_FULL (C++ enumerator), 635
ETH_DUPLEX_HALF (C++ enumerator), 635
eth_duplex_t (C++ enum), 635
eth_event_t (C++ enum), 635
ETH_HEADER_LEN (C 宏), 633
ETH_JUMBO_FRAME_PAYLOAD_LEN (C 宏), 633
ETH_LINK_DOWN (C++ enumerator), 634
eth_link_t (C++ enum), 634
ETH_LINK_UP (C++ enumerator), 634
eth_mac_config_t (C++ class), 639
eth_mac_config_t::flags (C++ member), 639
eth_mac_config_t::rx_task_prio (C++ member), 639
eth_mac_config_t::rx_task_stack_size (C++ member), 639
eth_mac_config_t::smi_mdc_gpio_num (C++ member), 639
eth_mac_config_t::smi_mdio_gpio_num (C++ member), 639
eth_mac_config_t::sw_reset_timeout_ms (C++ member), 639
ETH_MAC_DEFAULT_CONFIG (C 宏), 639
ETH_MAC_FLAG_PIN_TO_CORE (C 宏), 639
ETH_MAC_FLAG_WORK_WITH_CACHE_DISABLE (C 宏), 639
ETH_MAX_PACKET_SIZE (C 宏), 633
ETH_MAX_PAYLOAD_LEN (C 宏), 633
ETH_MIN_PACKET_SIZE (C 宏), 633
ETH_MIN_PAYLOAD_LEN (C 宏), 633
eth_phy_config_t (C++ class), 642
eth_phy_config_t::autonego_timeout_ms (C++ member), 642
eth_phy_config_t::phy_addr (C++ member), 642
eth_phy_config_t::reset_gpio_num (C++ member), 642
eth_phy_config_t::reset_timeout_ms (C++ member), 642
ETH_PHY_DEFAULT_CONFIG (C 宏), 642
ETH_SPEED_100M (C++ enumerator), 635
ETH_SPEED_10M (C++ enumerator), 634
eth_speed_t (C++ enum), 634
ETH_STATE_DEINIT (C++ enumerator), 634
ETH_STATE_DUPLEX (C++ enumerator), 634
ETH_STATE_LINK (C++ enumerator), 634
ETH_STATE_LLINIT (C++ enumerator), 634
ETH_STATE_PAUSE (C++ enumerator), 634
ETH_STATE_SPEED (C++ enumerator), 634
ETH_VLAN_TAG_LEN (C 宏), 633
ETHERNET_EVENT_CONNECTED (C++ enumerator), 635
ETHERNET_EVENT_DISCONNECTED (C++ enumerator), 635
ETHERNET_EVENT_START (C++ enumerator), 635
ETHERNET_EVENT_STOP (C++ enumerator), 635
ETS_INTERNAL_INTR_SOURCE_OFF (C 宏), 1317
ETS_INTERNAL_PROFILING_INTR_SOURCE (C 宏), 1317
ETS_INTERNAL_SW0_INTR_SOURCE (C 宏), 1317
ETS_INTERNAL_SW1_INTR_SOURCE (C 宏), 1317
ETS_INTERNAL_TIMER0_INTR_SOURCE (C 宏), 1317
ETS_INTERNAL_TIMER1_INTR_SOURCE (C 宏), 1317
ETS_INTERNAL_TIMER2_INTR_SOURCE (C 宏), 1317
EventBits_t (C++ type), 1248
EventGroupHandle_t (C++ type), 1248
EXT_ADV_TX_PWR_NO_PREFERENCE (C 宏), 198

F

FAST_PROV_ACT_ENTER (C++ enumerator), 381
FAST_PROV_ACT_EXIT (C++ enumerator), 381
FAST_PROV_ACT_MAX (C++ enumerator), 381
FAST_PROV_ACT_NONE (C++ enumerator), 381
FAST_PROV_ACT_SUSPEND (C++ enumerator), 381
ff_diskio_impl_t (C++ class), 1103
ff_diskio_impl_t::init (C++ member), 1103
ff_diskio_impl_t::ioctl (C++ member), 1103
ff_diskio_impl_t::read (C++ member), 1103
ff_diskio_impl_t::status (C++ member), 1103
ff_diskio_impl_t::write (C++ member), 1103
ff_diskio_register (C++ function), 1103
ff_diskio_register_raw_partition (C++ function), 1103
ff_diskio_register_sdmmc (C++ function), 1103
ff_diskio_register_wl_partition (C++ function), 1103
filter_cb_t (C++ type), 847
FTM_STATUS_CONF_REJECTED (C++ enumerator), 585
FTM_STATUS_FAIL (C++ enumerator), 585
FTM_STATUS_NO_RESPONSE (C++ enumerator), 585

FTM_STATUS_SUCCESS (*C++ enumerator*), 585
FTM_STATUS_UNSUPPORTED (*C++ enumerator*), 585

G

gpio_config (*C++ function*), 692
gpio_config_t (*C++ class*), 698
gpio_config_t::intr_type (*C++ member*), 698
gpio_config_t::mode (*C++ member*), 698
gpio_config_t::pin_bit_mask (*C++ member*), 698
gpio_config_t::pull_down_en (*C++ member*), 698
gpio_config_t::pull_up_en (*C++ member*), 698
gpio_deep_sleep_hold_dis (*C++ function*), 697
gpio_deep_sleep_hold_en (*C++ function*), 696
GPIO_DRIVE_CAP_0 (*C++ enumerator*), 704
GPIO_DRIVE_CAP_1 (*C++ enumerator*), 704
GPIO_DRIVE_CAP_2 (*C++ enumerator*), 704
GPIO_DRIVE_CAP_3 (*C++ enumerator*), 705
GPIO_DRIVE_CAP_DEFAULT (*C++ enumerator*), 704
GPIO_DRIVE_CAP_MAX (*C++ enumerator*), 705
gpio_drive_cap_t (*C++ enum*), 704
GPIO_FLOATING (*C++ enumerator*), 704
gpio_get_drive_capability (*C++ function*), 696
gpio_get_level (*C++ function*), 693
gpio_hold_dis (*C++ function*), 696
gpio_hold_en (*C++ function*), 696
gpio_install_isr_service (*C++ function*), 695
gpio_int_type_t (*C++ enum*), 703
GPIO_INTR_ANYEDGE (*C++ enumerator*), 703
GPIO_INTR_DISABLE (*C++ enumerator*), 703
gpio_intr_disable (*C++ function*), 693
gpio_intr_enable (*C++ function*), 692
GPIO_INTR_HIGH_LEVEL (*C++ enumerator*), 703
GPIO_INTR_LOW_LEVEL (*C++ enumerator*), 703
GPIO_INTR_MAX (*C++ enumerator*), 704
GPIO_INTR_NEGEDGE (*C++ enumerator*), 703
GPIO_INTR_POSEDGE (*C++ enumerator*), 703
gpio_iomux_in (*C++ function*), 697
gpio_iomux_out (*C++ function*), 697
GPIO_IS_VALID_DIGITAL_IO_PAD (*C 宏*), 698
GPIO_IS_VALID_GPIO (*C 宏*), 698
GPIO_IS_VALID_OUTPUT_GPIO (*C 宏*), 698
gpio_isr_handle_t (*C++ type*), 698
gpio_isr_handler_add (*C++ function*), 695
gpio_isr_handler_remove (*C++ function*), 695
gpio_isr_register (*C++ function*), 694
gpio_isr_t (*C++ type*), 701
GPIO_MODE_DISABLE (*C++ enumerator*), 704
GPIO_MODE_INPUT (*C++ enumerator*), 704
GPIO_MODE_INPUT_OUTPUT (*C++ enumerator*), 704
GPIO_MODE_INPUT_OUTPUT_OD (*C++ enumerator*), 704
GPIO_MODE_OUTPUT (*C++ enumerator*), 704
GPIO_MODE_OUTPUT_OD (*C++ enumerator*), 704
gpio_mode_t (*C++ enum*), 704
GPIO_NUM_0 (*C++ enumerator*), 701
GPIO_NUM_1 (*C++ enumerator*), 702
GPIO_NUM_10 (*C++ enumerator*), 702
GPIO_NUM_11 (*C++ enumerator*), 702
GPIO_NUM_12 (*C++ enumerator*), 702
GPIO_NUM_13 (*C++ enumerator*), 702
GPIO_NUM_14 (*C++ enumerator*), 702
GPIO_NUM_15 (*C++ enumerator*), 702
GPIO_NUM_16 (*C++ enumerator*), 702
GPIO_NUM_17 (*C++ enumerator*), 702
GPIO_NUM_18 (*C++ enumerator*), 702
GPIO_NUM_19 (*C++ enumerator*), 702
GPIO_NUM_2 (*C++ enumerator*), 702
GPIO_NUM_20 (*C++ enumerator*), 702
GPIO_NUM_21 (*C++ enumerator*), 702
GPIO_NUM_22 (*C++ enumerator*), 702
GPIO_NUM_23 (*C++ enumerator*), 702
GPIO_NUM_25 (*C++ enumerator*), 703
GPIO_NUM_26 (*C++ enumerator*), 703
GPIO_NUM_27 (*C++ enumerator*), 703
GPIO_NUM_28 (*C++ enumerator*), 703
GPIO_NUM_29 (*C++ enumerator*), 703
GPIO_NUM_3 (*C++ enumerator*), 702
GPIO_NUM_30 (*C++ enumerator*), 703
GPIO_NUM_31 (*C++ enumerator*), 703
GPIO_NUM_32 (*C++ enumerator*), 703
GPIO_NUM_33 (*C++ enumerator*), 703
GPIO_NUM_34 (*C++ enumerator*), 703
GPIO_NUM_35 (*C++ enumerator*), 703
GPIO_NUM_36 (*C++ enumerator*), 703
GPIO_NUM_37 (*C++ enumerator*), 703
GPIO_NUM_38 (*C++ enumerator*), 703
GPIO_NUM_39 (*C++ enumerator*), 703
GPIO_NUM_4 (*C++ enumerator*), 702
GPIO_NUM_5 (*C++ enumerator*), 702
GPIO_NUM_6 (*C++ enumerator*), 702
GPIO_NUM_7 (*C++ enumerator*), 702
GPIO_NUM_8 (*C++ enumerator*), 702
GPIO_NUM_9 (*C++ enumerator*), 702
GPIO_NUM_MAX (*C++ enumerator*), 703
GPIO_NUM_NC (*C++ enumerator*), 701
gpio_num_t (*C++ enum*), 701
GPIO_PIN_COUNT (*C 宏*), 698
GPIO_PIN_REG_0 (*C 宏*), 700
GPIO_PIN_REG_1 (*C 宏*), 700
GPIO_PIN_REG_10 (*C 宏*), 700
GPIO_PIN_REG_11 (*C 宏*), 700
GPIO_PIN_REG_12 (*C 宏*), 700
GPIO_PIN_REG_13 (*C 宏*), 700
GPIO_PIN_REG_14 (*C 宏*), 700
GPIO_PIN_REG_15 (*C 宏*), 700

GPIO_PIN_REG_16 (*C 宏*), 700
GPIO_PIN_REG_17 (*C 宏*), 700
GPIO_PIN_REG_18 (*C 宏*), 700
GPIO_PIN_REG_19 (*C 宏*), 700
GPIO_PIN_REG_2 (*C 宏*), 700
GPIO_PIN_REG_20 (*C 宏*), 701
GPIO_PIN_REG_21 (*C 宏*), 701
GPIO_PIN_REG_22 (*C 宏*), 701
GPIO_PIN_REG_23 (*C 宏*), 701
GPIO_PIN_REG_24 (*C 宏*), 701
GPIO_PIN_REG_25 (*C 宏*), 701
GPIO_PIN_REG_26 (*C 宏*), 701
GPIO_PIN_REG_27 (*C 宏*), 701
GPIO_PIN_REG_28 (*C 宏*), 701
GPIO_PIN_REG_29 (*C 宏*), 701
GPIO_PIN_REG_3 (*C 宏*), 700
GPIO_PIN_REG_30 (*C 宏*), 701
GPIO_PIN_REG_31 (*C 宏*), 701
GPIO_PIN_REG_32 (*C 宏*), 701
GPIO_PIN_REG_33 (*C 宏*), 701
GPIO_PIN_REG_34 (*C 宏*), 701
GPIO_PIN_REG_35 (*C 宏*), 701
GPIO_PIN_REG_36 (*C 宏*), 701
GPIO_PIN_REG_37 (*C 宏*), 701
GPIO_PIN_REG_38 (*C 宏*), 701
GPIO_PIN_REG_39 (*C 宏*), 701
GPIO_PIN_REG_4 (*C 宏*), 700
GPIO_PIN_REG_40 (*C 宏*), 701
GPIO_PIN_REG_41 (*C 宏*), 701
GPIO_PIN_REG_42 (*C 宏*), 701
GPIO_PIN_REG_43 (*C 宏*), 701
GPIO_PIN_REG_44 (*C 宏*), 701
GPIO_PIN_REG_45 (*C 宏*), 701
GPIO_PIN_REG_46 (*C 宏*), 701
GPIO_PIN_REG_5 (*C 宏*), 700
GPIO_PIN_REG_6 (*C 宏*), 700
GPIO_PIN_REG_7 (*C 宏*), 700
GPIO_PIN_REG_8 (*C 宏*), 700
GPIO_PIN_REG_9 (*C 宏*), 700
GPIO_PORT_0 (*C++ enumerator*), 701
GPIO_PORT_MAX (*C++ enumerator*), 701
gpio_port_t (*C++ enum*), 701
gpio_pull_mode_t (*C++ enum*), 704
gpio_pulldown_dis (*C++ function*), 695
GPIO_PULLDOWN_DISABLE (*C++ enumerator*), 704
gpio_pulldown_en (*C++ function*), 695
GPIO_PULLDOWN_ENABLE (*C++ enumerator*), 704
GPIO_PULLDOWN_ONLY (*C++ enumerator*), 704
gpio_pulldown_t (*C++ enum*), 704
gpio_pullup_dis (*C++ function*), 694
GPIO_PULLUP_DISABLE (*C++ enumerator*), 704
gpio_pullup_en (*C++ function*), 694
GPIO_PULLUP_ENABLE (*C++ enumerator*), 704
GPIO_PULLUP_ONLY (*C++ enumerator*), 704
GPIO_PULLUP_PULLDOWN (*C++ enumerator*), 704
gpio_pullup_t (*C++ enum*), 704
gpio_reset_pin (*C++ function*), 692
GPIO_SEL_0 (*C 宏*), 698
GPIO_SEL_1 (*C 宏*), 698
GPIO_SEL_10 (*C 宏*), 699
GPIO_SEL_11 (*C 宏*), 699
GPIO_SEL_12 (*C 宏*), 699
GPIO_SEL_13 (*C 宏*), 699
GPIO_SEL_14 (*C 宏*), 699
GPIO_SEL_15 (*C 宏*), 699
GPIO_SEL_16 (*C 宏*), 699
GPIO_SEL_17 (*C 宏*), 699
GPIO_SEL_18 (*C 宏*), 699
GPIO_SEL_19 (*C 宏*), 699
GPIO_SEL_2 (*C 宏*), 698
GPIO_SEL_20 (*C 宏*), 699
GPIO_SEL_21 (*C 宏*), 699
GPIO_SEL_22 (*C 宏*), 699
GPIO_SEL_23 (*C 宏*), 699
GPIO_SEL_25 (*C 宏*), 699
GPIO_SEL_26 (*C 宏*), 699
GPIO_SEL_27 (*C 宏*), 699
GPIO_SEL_28 (*C 宏*), 699
GPIO_SEL_29 (*C 宏*), 700
GPIO_SEL_3 (*C 宏*), 698
GPIO_SEL_30 (*C 宏*), 700
GPIO_SEL_31 (*C 宏*), 700
GPIO_SEL_32 (*C 宏*), 700
GPIO_SEL_33 (*C 宏*), 700
GPIO_SEL_34 (*C 宏*), 700
GPIO_SEL_35 (*C 宏*), 700
GPIO_SEL_36 (*C 宏*), 700
GPIO_SEL_37 (*C 宏*), 700
GPIO_SEL_38 (*C 宏*), 700
GPIO_SEL_39 (*C 宏*), 700
GPIO_SEL_4 (*C 宏*), 698
GPIO_SEL_5 (*C 宏*), 699
GPIO_SEL_6 (*C 宏*), 699
GPIO_SEL_7 (*C 宏*), 699
GPIO_SEL_8 (*C 宏*), 699
GPIO_SEL_9 (*C 宏*), 699
gpio_set_direction (*C++ function*), 693
gpio_set_drive_capability (*C++ function*), 696
gpio_set_intr_type (*C++ function*), 692
gpio_set_level (*C++ function*), 693
gpio_set_pull_mode (*C++ function*), 693
gpio_sleep_sel_dis (*C++ function*), 697
gpio_sleep_sel_en (*C++ function*), 697
gpio_sleep_set_direction (*C++ function*), 697
gpio_sleep_set_pull_mode (*C++ function*), 697
gpio_uninstall_isr_service (*C++ function*), 695
gpio_wakeup_disable (*C++ function*), 694
gpio_wakeup_enable (*C++ function*), 694

H

hall_sensor_read (*C++ function*), 665
heap_caps_add_region (*C++ function*), 1288

heap_caps_add_region_with_caps (C++ function), 1288
heap_caps_aligned_alloc (C++ function), 1283
heap_caps_aligned_calloc (C++ function), 1283
heap_caps_aligned_free (C++ function), 1283
heap_caps_calloc (C++ function), 1283
heap_caps_calloc_prefer (C++ function), 1286
heap_caps_check_integrity (C++ function), 1285
heap_caps_check_integrity_addr (C++ function), 1285
heap_caps_check_integrity_all (C++ function), 1285
heap_caps_dump (C++ function), 1286
heap_caps_dump_all (C++ function), 1286
heap_caps_enable_nonos_stack_heaps (C++ function), 1288
heap_caps_free (C++ function), 1283
heap_caps_get_allocated_size (C++ function), 1286
heap_caps_get_free_size (C++ function), 1284
heap_caps_get_info (C++ function), 1284
heap_caps_get_largest_free_block (C++ function), 1284
heap_caps_get_minimum_free_size (C++ function), 1284
heap_caps_get_total_size (C++ function), 1284
heap_caps_init (C++ function), 1288
heap_caps_malloc (C++ function), 1282
heap_caps_malloc_extmem_enable (C++ function), 1285
heap_caps_malloc_prefer (C++ function), 1285
heap_caps_print_heap_info (C++ function), 1284
heap_caps_realloc (C++ function), 1283
heap_caps_realloc_prefer (C++ function), 1286
heap_caps_register_failed_alloc_callback (C++ function), 1282
HEAP_TRACE_ALL (C++ enumerator), 1302
heap_trace_dump (C++ function), 1302
heap_trace_get (C++ function), 1302
heap_trace_get_count (C++ function), 1301
heap_trace_init_standalone (C++ function), 1301
heap_trace_init_tohost (C++ function), 1301
HEAP_TRACE_LEAKS (C++ enumerator), 1302
heap_trace_mode_t (C++ enum), 1302
heap_trace_record_t (C++ class), 1302
heap_trace_record_t::address (C++ member), 1302
heap_trace_record_t::alloced_by (C++ member), 1302
heap_trace_record_t::ccount (C++ member), 1302
heap_trace_record_t::freed_by (C++ member), 1302
heap_trace_record_t::size (C++ member), 1302
heap_trace_resume (C++ function), 1301
heap_trace_start (C++ function), 1301
heap_trace_stop (C++ function), 1301
HTTP_AUTH_TYPE_BASIC (C++ enumerator), 925
HTTP_AUTH_TYPE_DIGEST (C++ enumerator), 925
HTTP_AUTH_TYPE_NONE (C++ enumerator), 925
http_client_init_cb_t (C++ type), 1153
HTTP_EVENT_DISCONNECTED (C++ enumerator), 924
HTTP_EVENT_ERROR (C++ enumerator), 923
http_event_handle_cb (C++ type), 923
HTTP_EVENT_HEADER_SENT (C++ enumerator), 924
HTTP_EVENT_HEADERS_SENT (C++ enumerator), 924
HTTP_EVENT_ON_CONNECTED (C++ enumerator), 924
HTTP_EVENT_ON_DATA (C++ enumerator), 924
HTTP_EVENT_ON_FINISH (C++ enumerator), 924
HTTP_EVENT_ON_HEADER (C++ enumerator), 924
HTTP_METHOD_COPY (C++ enumerator), 925
HTTP_METHOD_DELETE (C++ enumerator), 924
HTTP_METHOD_GET (C++ enumerator), 924
HTTP_METHOD_HEAD (C++ enumerator), 924
HTTP_METHOD_LOCK (C++ enumerator), 925
HTTP_METHOD_MAX (C++ enumerator), 925
HTTP_METHOD_MKCOL (C++ enumerator), 925
HTTP_METHOD_MOVE (C++ enumerator), 925
HTTP_METHOD_NOTIFY (C++ enumerator), 924
HTTP_METHOD_OPTIONS (C++ enumerator), 924
HTTP_METHOD_PATCH (C++ enumerator), 924
HTTP_METHOD_POST (C++ enumerator), 924
HTTP_METHOD_PROPFIND (C++ enumerator), 925
HTTP_METHOD_PROPPATCH (C++ enumerator), 925
HTTP_METHOD_PUT (C++ enumerator), 924
HTTP_METHOD_SUBSCRIBE (C++ enumerator), 924
HTTP_METHOD_UNLOCK (C++ enumerator), 925
HTTP_METHOD_UNSUBSCRIBE (C++ enumerator), 924
HTTP_TRANSPORT_OVER_SSL (C++ enumerator), 924
HTTP_TRANSPORT_OVER_TCP (C++ enumerator), 924
HTTP_TRANSPORT_UNKNOWN (C++ enumerator), 924
HTTPD_200 (C 宏), 950
HTTPD_204 (C 宏), 950
HTTPD_207 (C 宏), 950
HTTPD_400 (C 宏), 950
HTTPD_400_BAD_REQUEST (C++ enumerator), 953

HTTPD_401_UNAUTHORIZED (C++ enumerator), 954
HTTPD_403_FORBIDDEN (C++ enumerator), 954
HTTPD_404 (C 宏), 950
HTTPD_404_NOT_FOUND (C++ enumerator), 954
HTTPD_405_METHOD_NOT_ALLOWED (C++ enumerator), 954
HTTPD_408 (C 宏), 950
HTTPD_408_REQ_TIMEOUT (C++ enumerator), 954
HTTPD_411_LENGTH_REQUIRED (C++ enumerator), 954
HTTPD_414_URI_TOO_LONG (C++ enumerator), 954
HTTPD_431_REQ_HDR_FIELDS_TOO_LARGE (C++ enumerator), 954
HTTPD_500 (C 宏), 950
HTTPD_500_INTERNAL_SERVER_ERROR (C++ enumerator), 953
HTTPD_501_METHOD_NOT_IMPLEMENTED (C++ enumerator), 953
HTTPD_505_VERSION_NOT_SUPPORTED (C++ enumerator), 953
httpd_close_func_t (C++ type), 953
httpd_config (C++ class), 948
httpd_config::backlog_conn (C++ member), 948
httpd_config::close_fn (C++ member), 949
httpd_config::core_id (C++ member), 948
httpd_config::ctrl_port (C++ member), 948
httpd_config::global_transport_ctx (C++ member), 948
httpd_config::global_transport_ctx_free_fn (C++ member), 948
httpd_config::global_user_ctx (C++ member), 948
httpd_config::global_user_ctx_free_fn (C++ member), 948
httpd_config::lru_purge_enable (C++ member), 948
httpd_config::max_open_sockets (C++ member), 948
httpd_config::max_resp_headers (C++ member), 948
httpd_config::max_uri_handlers (C++ member), 948
httpd_config::open_fn (C++ member), 948
httpd_config::recv_wait_timeout (C++ member), 948
httpd_config::send_wait_timeout (C++ member), 948
httpd_config::server_port (C++ member), 948
httpd_config::stack_size (C++ member), 948
httpd_config::task_priority (C++ member), 948
httpd_config::uri_match_fn (C++ member), 949
httpd_config_t (C++ type), 953
HTTPD_DEFAULT_CONFIG (C 宏), 951
HTTPD_ERR_CODE_MAX (C++ enumerator), 954
httpd_err_code_t (C++ enum), 953
httpd_err_handler_func_t (C++ type), 952
httpd_free_ctx_fn_t (C++ type), 953
httpd_get_client_list (C++ function), 947
httpd_get_global_transport_ctx (C++ function), 947
httpd_get_global_user_ctx (C++ function), 947
httpd_handle_t (C++ type), 952
HTTPD_MAX_REQ_HDR_LEN (C 宏), 950
HTTPD_MAX_URI_LEN (C 宏), 950
httpd_method_t (C++ type), 952
httpd_open_func_t (C++ type), 953
httpd_pending_func_t (C++ type), 952
httpd_query_key_value (C++ function), 939
httpd_queue_work (C++ function), 946
httpd_recv_func_t (C++ type), 952
httpd_register_err_handler (C++ function), 944
httpd_register_uri_handler (C++ function), 935
httpd_req (C++ class), 949
httpd_req::aux (C++ member), 949
httpd_req::content_len (C++ member), 949
httpd_req::free_ctx (C++ member), 950
httpd_req::handle (C++ member), 949
httpd_req::ignore_sess_ctx_changes (C++ member), 950
httpd_req::method (C++ member), 949
httpd_req::sess_ctx (C++ member), 949
httpd_req::uri (C++ member), 949
httpd_req::user_ctx (C++ member), 949
httpd_req_get_hdr_value_len (C++ function), 938
httpd_req_get_hdr_value_str (C++ function), 938
httpd_req_get_url_query_len (C++ function), 938
httpd_req_get_url_query_str (C++ function), 939
httpd_req_recv (C++ function), 937
httpd_req_t (C++ type), 951
httpd_req_to_sockfd (C++ function), 937
httpd_resp_send (C++ function), 940
httpd_resp_send_404 (C++ function), 942
httpd_resp_send_408 (C++ function), 943
httpd_resp_send_500 (C++ function), 943
httpd_resp_send_chunk (C++ function), 940
httpd_resp_send_err (C++ function), 942
httpd_resp_sendstr (C++ function), 941
httpd_resp_sendstr_chunk (C++ function), 941
httpd_resp_set_hdr (C++ function), 942
httpd_resp_set_status (C++ function), 941
httpd_resp_set_type (C++ function), 941

HTTPD_RESP_USE_STRLEN (*C 宏*), 951
httpd_send (*C++ function*), 943
httpd_send_func_t (*C++ type*), 951
httpd_sess_get_ctx (*C++ function*), 946
httpd_sess_get_transport_ctx (*C++ function*), 946
httpd_sess_set_ctx (*C++ function*), 946
httpd_sess_set_pending_override (*C++ function*), 937
httpd_sess_set_recv_override (*C++ function*), 936
httpd_sess_set_send_override (*C++ function*), 937
httpd_sess_set_transport_ctx (*C++ function*), 946
httpd_sess_trigger_close (*C++ function*), 947
httpd_sess_update_lru_counter (*C++ function*), 947
HTTPD_SOCK_ERR_FAIL (*C 宏*), 950
HTTPD_SOCK_ERR_INVALID (*C 宏*), 950
HTTPD_SOCK_ERR_TIMEOUT (*C 宏*), 950
httpd_socket_recv (*C++ function*), 944
httpd_socket_send (*C++ function*), 944
httpd_ssl_config (*C++ class*), 955
httpd_ssl_config::cacert_len (*C++ member*), 955
httpd_ssl_config::cacert_pem (*C++ member*), 955
httpd_ssl_config::client_verify_cert_len (*C++ member*), 955
httpd_ssl_config::client_verify_cert_pem (*C++ member*), 955
httpd_ssl_config::httpd (*C++ member*), 955
httpd_ssl_config::port_insecure (*C++ member*), 956
httpd_ssl_config::port_secure (*C++ member*), 956
httpd_ssl_config::prvtkey_len (*C++ member*), 955
httpd_ssl_config::prvtkey_pem (*C++ member*), 955
httpd_ssl_config::transport_mode (*C++ member*), 955
HTTPD_SSL_CONFIG_DEFAULT (*C 宏*), 956
httpd_ssl_config_t (*C++ type*), 956
httpd_ssl_start (*C++ function*), 955
httpd_ssl_stop (*C++ function*), 955
HTTPD_SSL_TRANSPORT_INSECURE (*C++ enumerator*), 956
httpd_ssl_transport_mode_t (*C++ enum*), 956
HTTPD_SSL_TRANSPORT_SECURE (*C++ enumerator*), 956
httpd_start (*C++ function*), 945
httpd_stop (*C++ function*), 945
HTTPD_TYPE_JSON (*C 宏*), 951
HTTPD_TYPE_OCTET (*C 宏*), 951
HTTPD_TYPE_TEXT (*C 宏*), 951
httpd_unregister_uri (*C++ function*), 936
httpd_unregister_uri_handler (*C++ function*), 936
httpd_uri (*C++ class*), 950
httpd_uri::handler (*C++ member*), 950
httpd_uri::method (*C++ member*), 950
httpd_uri::uri (*C++ member*), 950
httpd_uri::user_ctx (*C++ member*), 950
httpd_uri_match_func_t (*C++ type*), 953
httpd_uri_match_wildcard (*C++ function*), 939
httpd_uri_t (*C++ type*), 951
httpd_work_fn_t (*C++ type*), 953
HttpStatus_BadRequest (*C++ enumerator*), 925
HttpStatus_Code (*C++ enum*), 925
HttpStatus_Forbidden (*C++ enumerator*), 925
HttpStatus_Found (*C++ enumerator*), 925
HttpStatus_InternalError (*C++ enumerator*), 925
HttpStatus_MovedPermanently (*C++ enumerator*), 925
HttpStatus_MultipleChoices (*C++ enumerator*), 925
HttpStatus_NotFound (*C++ enumerator*), 925
HttpStatus_Ok (*C++ enumerator*), 925
HttpStatus_PermanentRedirect (*C++ enumerator*), 925
HttpStatus_SeeOther (*C++ enumerator*), 925
HttpStatus_TemporaryRedirect (*C++ enumerator*), 925
HttpStatus_Unauthorized (*C++ enumerator*), 925

I

i2c_ack_type_t (*C++ enum*), 721
I2C_ADDR_BIT_10 (*C++ enumerator*), 721
I2C_ADDR_BIT_7 (*C++ enumerator*), 721
I2C_ADDR_BIT_MAX (*C++ enumerator*), 721
i2c_addr_mode_t (*C++ enum*), 721
I2C_APB_CLK_FREQ (*C 宏*), 719
I2C_CLK_FREQ_MAX (*C 宏*), 720
I2C_CMD_END (*C++ enumerator*), 721
i2c_cmd_handle_t (*C++ type*), 719
i2c_cmd_link_create (*C++ function*), 714
i2c_cmd_link_delete (*C++ function*), 714
I2C_CMD_READ (*C++ enumerator*), 721
I2C_CMD_RESTART (*C++ enumerator*), 721
I2C_CMD_STOP (*C++ enumerator*), 721
I2C_CMD_WRITE (*C++ enumerator*), 721
i2c_config_t (*C++ class*), 719
i2c_config_t::addr_10bit_en (*C++ member*), 720
i2c_config_t::clk_flags (*C++ member*), 720
i2c_config_t::clk_speed (*C++ member*), 720
i2c_config_t::master (*C++ member*), 720
i2c_config_t::mode (*C++ member*), 719

i2c_config_t::scl_io_num (C++ member), 719
i2c_config_t::scl_pullup_en (C++ member), 720
i2c_config_t::sda_io_num (C++ member), 719
i2c_config_t::sda_pullup_en (C++ member), 720
i2c_config_t::slave (C++ member), 720
i2c_config_t::slave_addr (C++ member), 720
I2C_DATA_MODE_LSB_FIRST (C++ enumerator), 721
I2C_DATA_MODE_MAX (C++ enumerator), 721
I2C_DATA_MODE_MSB_FIRST (C++ enumerator), 721
i2c_driver_delete (C++ function), 713
i2c_driver_install (C++ function), 713
i2c_filter_disable (C++ function), 717
i2c_filter_enable (C++ function), 717
i2c_get_data_mode (C++ function), 719
i2c_get_data_timing (C++ function), 718
i2c_get_period (C++ function), 717
i2c_get_start_timing (C++ function), 717
i2c_get_stop_timing (C++ function), 718
i2c_get_timeout (C++ function), 718
i2c_isr_free (C++ function), 714
i2c_isr_register (C++ function), 713
I2C_MASTER_ACK (C++ enumerator), 721
I2C_MASTER_ACK_MAX (C++ enumerator), 721
i2c_master_cmd_begin (C++ function), 716
I2C_MASTER_LAST_NACK (C++ enumerator), 721
I2C_MASTER_NACK (C++ enumerator), 721
I2C_MASTER_READ (C++ enumerator), 720
i2c_master_read (C++ function), 715
i2c_master_read_byte (C++ function), 715
i2c_master_start (C++ function), 714
i2c_master_stop (C++ function), 715
I2C_MASTER_WRITE (C++ enumerator), 720
i2c_master_write (C++ function), 715
i2c_master_write_byte (C++ function), 714
I2C_MODE_MASTER (C++ enumerator), 720
I2C_MODE_MAX (C++ enumerator), 720
I2C_MODE_SLAVE (C++ enumerator), 720
i2c_mode_t (C++ enum), 720
I2C_NUM_0 (C 宏), 719
I2C_NUM_1 (C 宏), 719
I2C_NUM_MAX (C 宏), 719
i2c_opmode_t (C++ enum), 721
i2c_param_config (C++ function), 713
i2c_port_t (C++ type), 720
i2c_reset_rx_fifo (C++ function), 713
i2c_reset_tx_fifo (C++ function), 713
i2c_rw_t (C++ enum), 720
I2C_SCLK_APB (C++ enumerator), 721
I2C_SCLK_DEFAULT (C++ enumerator), 721
I2C_SCLK_MAX (C++ enumerator), 721
I2C_SCLK_SRC_FLAG_AWARE_DFS (C 宏), 720
I2C_SCLK_SRC_FLAG_FOR_NOMAL (C 宏), 720
I2C_SCLK_SRC_FLAG_LIGHT_SLEEP (C 宏), 720
i2c_sclk_t (C++ enum), 721
i2c_set_data_mode (C++ function), 719
i2c_set_data_timing (C++ function), 718
i2c_set_period (C++ function), 716
i2c_set_pin (C++ function), 714
i2c_set_start_timing (C++ function), 717
i2c_set_stop_timing (C++ function), 717
i2c_set_timeout (C++ function), 718
i2c_slave_read_buffer (C++ function), 716
i2c_slave_write_buffer (C++ function), 716
i2c_trans_mode_t (C++ enum), 720
i2s_adc_disable (C++ function), 728
i2s_adc_enable (C++ function), 728
I2S_BITS_PER_SAMPLE_16BIT (C++ enumerator), 730
I2S_BITS_PER_SAMPLE_24BIT (C++ enumerator), 730
I2S_BITS_PER_SAMPLE_32BIT (C++ enumerator), 730
I2S_BITS_PER_SAMPLE_8BIT (C++ enumerator), 730
i2s_bits_per_sample_t (C++ enum), 730
I2S_CHANNEL_FMT_ALL_LEFT (C++ enumerator), 731
I2S_CHANNEL_FMT_ALL_RIGHT (C++ enumerator), 731
I2S_CHANNEL_FMT_ONLY_LEFT (C++ enumerator), 731
I2S_CHANNEL_FMT_ONLY_RIGHT (C++ enumerator), 731
I2S_CHANNEL_FMT_RIGHT_LEFT (C++ enumerator), 731
i2s_channel_fmt_t (C++ enum), 731
I2S_CHANNEL_MONO (C++ enumerator), 730
I2S_CHANNEL_STEREO (C++ enumerator), 731
i2s_channel_t (C++ enum), 730
I2S_CLK_APLL (C++ enumerator), 732
I2S_CLK_D2CLK (C++ enumerator), 732
i2s_clock_src_t (C++ enum), 732
I2S_COMM_FORMAT_I2S (C++ enumerator), 731
I2S_COMM_FORMAT_I2S_LSB (C++ enumerator), 731
I2S_COMM_FORMAT_I2S_MSB (C++ enumerator), 731
I2S_COMM_FORMAT_PCM (C++ enumerator), 731
I2S_COMM_FORMAT_PCM_LONG (C++ enumerator), 731
I2S_COMM_FORMAT_PCM_SHORT (C++ enumerator), 731
I2S_COMM_FORMAT_STAND_I2S (C++ enumerator), 731
I2S_COMM_FORMAT_STAND_MAX (C++ enumerator), 731
I2S_COMM_FORMAT_STAND_MSB (C++ enumerator), 731
I2S_COMM_FORMAT_STAND_PCM_LONG (C++

enumerator), 731
I2S_COMM_FORMAT_STAND_PCM_SHORT (*C++ enumerator*), 731
i2s_comm_format_t (*C++ enum*), 731
i2s_config_t (*C++ class*), 729
i2s_config_t::bits_per_sample (*C++ member*), 729
i2s_config_t::channel_format (*C++ member*), 729
i2s_config_t::communication_format (*C++ member*), 729
i2s_config_t::dma_buf_count (*C++ member*), 729
i2s_config_t::dma_buf_len (*C++ member*), 729
i2s_config_t::fixed_mclk (*C++ member*), 729
i2s_config_t::intr_alloc_flags (*C++ member*), 729
i2s_config_t::mode (*C++ member*), 729
i2s_config_t::sample_rate (*C++ member*), 729
i2s_config_t::tx_desc_auto_clear (*C++ member*), 729
i2s_config_t::use_apll (*C++ member*), 729
I2S_DAC_CHANNEL_BOTH_EN (*C++ enumerator*), 732
I2S_DAC_CHANNEL_DISABLE (*C++ enumerator*), 732
I2S_DAC_CHANNEL_LEFT_EN (*C++ enumerator*), 732
I2S_DAC_CHANNEL_MAX (*C++ enumerator*), 732
I2S_DAC_CHANNEL_RIGHT_EN (*C++ enumerator*), 732
i2s_dac_mode_t (*C++ enum*), 732
i2s_driver_install (*C++ function*), 726
i2s_driver_uninstall (*C++ function*), 726
I2S_EVENT_DMA_ERROR (*C++ enumerator*), 732
I2S_EVENT_MAX (*C++ enumerator*), 732
I2S_EVENT_RX_DONE (*C++ enumerator*), 732
i2s_event_t (*C++ class*), 729
i2s_event_t::size (*C++ member*), 730
i2s_event_t::type (*C++ member*), 730
I2S_EVENT_TX_DONE (*C++ enumerator*), 732
i2s_event_type_t (*C++ enum*), 732
i2s_get_clk (*C++ function*), 728
i2s_isr_handle_t (*C++ type*), 729
I2S_MODE_ADC_BUILT_IN (*C++ enumerator*), 732
I2S_MODE_DAC_BUILT_IN (*C++ enumerator*), 732
I2S_MODE_MASTER (*C++ enumerator*), 731
I2S_MODE_PDM (*C++ enumerator*), 732
I2S_MODE_RX (*C++ enumerator*), 732
I2S_MODE_SLAVE (*C++ enumerator*), 732
i2s_mode_t (*C++ enum*), 731
I2S_MODE_TX (*C++ enumerator*), 732
I2S_NUM_0 (*C++ enumerator*), 730
I2S_NUM_1 (*C++ enumerator*), 730
I2S_NUM_MAX (*C++ enumerator*), 730
I2S_PDM_DSR_16S (*C++ enumerator*), 733
I2S_PDM_DSR_8S (*C++ enumerator*), 733
I2S_PDM_DSR_MAX (*C++ enumerator*), 733
i2s_pdm_dsr_t (*C++ enum*), 732
i2s_pin_config_t (*C++ class*), 730
i2s_pin_config_t::bck_io_num (*C++ member*), 730
i2s_pin_config_t::data_in_num (*C++ member*), 730
i2s_pin_config_t::data_out_num (*C++ member*), 730
i2s_pin_config_t::ws_io_num (*C++ member*), 730
I2S_PIN_NO_CHANGE (*C 宏*), 729
i2s_port_t (*C++ enum*), 730
i2s_read (*C++ function*), 727
i2s_set_adc_mode (*C++ function*), 728
i2s_set_clk (*C++ function*), 728
i2s_set_dac_mode (*C++ function*), 725
i2s_set_pdm_rx_down_sample (*C++ function*), 725
i2s_set_pin (*C++ function*), 725
i2s_set_sample_rates (*C++ function*), 727
i2s_start (*C++ function*), 727
i2s_stop (*C++ function*), 727
i2s_write (*C++ function*), 726
i2s_write_expand (*C++ function*), 726
i2s_zero_dma_buffer (*C++ function*), 728
I_ADDI (*C 宏*), 1882
I_ADDR (*C 宏*), 1881
I_ANDI (*C 宏*), 1882
I_ANDR (*C 宏*), 1882
I_BGE (*C 宏*), 1881
I_BL (*C 宏*), 1881
I_BXFI (*C 宏*), 1881
I_BXFR (*C 宏*), 1881
I_BXI (*C 宏*), 1881
I_BXR (*C 宏*), 1881
I_BXZI (*C 宏*), 1881
I_BXZR (*C 宏*), 1881
I_DELAY (*C 宏*), 1880
I_END (*C 宏*), 1880
I_HALT (*C 宏*), 1880
I_LD (*C 宏*), 1881
I_LSHI (*C 宏*), 1882
I_LSHR (*C 宏*), 1882
I_MOVI (*C 宏*), 1882
I_MOVR (*C 宏*), 1882
I_ORI (*C 宏*), 1882
I_ORR (*C 宏*), 1882
I_RD_REG (*C 宏*), 1881
I_RSHI (*C 宏*), 1882
I_RSHR (*C 宏*), 1882
I_ST (*C 宏*), 1880
I_SUBI (*C 宏*), 1882
I_SUBR (*C 宏*), 1882
I_WR_REG (*C 宏*), 1881
intr_handle_data_t (*C++ type*), 1317

intr_handle_t (*C++ type*), 1317
intr_handler_t (*C++ type*), 1317

L

LEDC_APB_CLK (*C++ enumerator*), 744
LEDC_APB_CLK_HZ (*C 宏*), 742
LEDC_AUTO_CLK (*C++ enumerator*), 744
ledc_bind_channel_timer (*C++ function*), 739
LEDC_CHANNEL_0 (*C++ enumerator*), 744
LEDC_CHANNEL_1 (*C++ enumerator*), 744
LEDC_CHANNEL_2 (*C++ enumerator*), 744
LEDC_CHANNEL_3 (*C++ enumerator*), 744
LEDC_CHANNEL_4 (*C++ enumerator*), 744
LEDC_CHANNEL_5 (*C++ enumerator*), 744
LEDC_CHANNEL_6 (*C++ enumerator*), 745
LEDC_CHANNEL_7 (*C++ enumerator*), 745
ledc_channel_config (*C++ function*), 736
ledc_channel_config_t (*C++ class*), 742
ledc_channel_config_t::channel (*C++ member*), 742
ledc_channel_config_t::duty (*C++ member*), 742
ledc_channel_config_t::gpio_num (*C++ member*), 742
ledc_channel_config_t::hpoint (*C++ member*), 743
ledc_channel_config_t::intr_type (*C++ member*), 742
ledc_channel_config_t::speed_mode (*C++ member*), 742
ledc_channel_config_t::timer_sel (*C++ member*), 742
LEDC_CHANNEL_MAX (*C++ enumerator*), 745
ledc_channel_t (*C++ enum*), 744
ledc_clk_cfg_t (*C++ enum*), 744
ledc_clk_src_t (*C++ enum*), 744
LEDC_DUTY_DIR_DECREASE (*C++ enumerator*), 743
LEDC_DUTY_DIR_INCREASE (*C++ enumerator*), 743
LEDC_DUTY_DIR_MAX (*C++ enumerator*), 743
ledc_duty_direction_t (*C++ enum*), 743
LEDC_ERR_DUTY (*C 宏*), 742
LEDC_ERR_VAL (*C 宏*), 742
ledc_fade_func_install (*C++ function*), 740
ledc_fade_func_uninstall (*C++ function*), 741
LEDC_FADE_MAX (*C++ enumerator*), 746
ledc_fade_mode_t (*C++ enum*), 746
LEDC_FADE_NO_WAIT (*C++ enumerator*), 746
ledc_fade_start (*C++ function*), 741
LEDC_FADE_WAIT_DONE (*C++ enumerator*), 746
ledc_get_duty (*C++ function*), 738
ledc_get_freq (*C++ function*), 737
ledc_get_hpoint (*C++ function*), 737
LEDC_HIGH_SPEED_MODE (*C++ enumerator*), 743
LEDC_INTR_DISABLE (*C++ enumerator*), 743
LEDC_INTR_FADE_END (*C++ enumerator*), 743
LEDC_INTR_MAX (*C++ enumerator*), 743
ledc_intr_type_t (*C++ enum*), 743
ledc_isr_handle_t (*C++ type*), 742
ledc_isr_register (*C++ function*), 738
LEDC_LOW_SPEED_MODE (*C++ enumerator*), 743
ledc_mode_t (*C++ enum*), 743
LEDC_REF_CLK_HZ (*C 宏*), 742
LEDC_REF_TICK (*C++ enumerator*), 744
ledc_set_duty (*C++ function*), 738
ledc_set_duty_and_update (*C++ function*), 741
ledc_set_duty_with_hpoint (*C++ function*), 737
ledc_set_fade (*C++ function*), 738
ledc_set_fade_step_and_start (*C++ function*), 741
ledc_set_fade_time_and_start (*C++ function*), 741
ledc_set_fade_with_step (*C++ function*), 740
ledc_set_fade_with_time (*C++ function*), 740
ledc_set_freq (*C++ function*), 737
ledc_set_pin (*C++ function*), 736
LEDC_SLOW_CLK_APB (*C++ enumerator*), 744
LEDC_SLOW_CLK_RTC8M (*C++ enumerator*), 744
ledc_slow_clk_sel_t (*C++ enum*), 744
LEDC_SPEED_MODE_MAX (*C++ enumerator*), 743
ledc_stop (*C++ function*), 736
LEDC_TIMER_0 (*C++ enumerator*), 744
LEDC_TIMER_1 (*C++ enumerator*), 744
LEDC_TIMER_10_BIT (*C++ enumerator*), 745
LEDC_TIMER_11_BIT (*C++ enumerator*), 745
LEDC_TIMER_12_BIT (*C++ enumerator*), 745
LEDC_TIMER_13_BIT (*C++ enumerator*), 745
LEDC_TIMER_14_BIT (*C++ enumerator*), 745
LEDC_TIMER_15_BIT (*C++ enumerator*), 745
LEDC_TIMER_16_BIT (*C++ enumerator*), 745
LEDC_TIMER_17_BIT (*C++ enumerator*), 745
LEDC_TIMER_18_BIT (*C++ enumerator*), 745
LEDC_TIMER_19_BIT (*C++ enumerator*), 745
LEDC_TIMER_1_BIT (*C++ enumerator*), 745
LEDC_TIMER_2 (*C++ enumerator*), 744
LEDC_TIMER_20_BIT (*C++ enumerator*), 746
LEDC_TIMER_2_BIT (*C++ enumerator*), 745
LEDC_TIMER_3 (*C++ enumerator*), 744
LEDC_TIMER_3_BIT (*C++ enumerator*), 745
LEDC_TIMER_4_BIT (*C++ enumerator*), 745
LEDC_TIMER_5_BIT (*C++ enumerator*), 745
LEDC_TIMER_6_BIT (*C++ enumerator*), 745
LEDC_TIMER_7_BIT (*C++ enumerator*), 745
LEDC_TIMER_8_BIT (*C++ enumerator*), 745
LEDC_TIMER_9_BIT (*C++ enumerator*), 745
LEDC_TIMER_BIT_MAX (*C++ enumerator*), 746
ledc_timer_bit_t (*C++ enum*), 745
ledc_timer_config (*C++ function*), 736
ledc_timer_config_t (*C++ class*), 743
ledc_timer_config_t::bit_num (*C++ member*), 743

ledc_timer_config_t::clk_cfg (C++ member), 743
ledc_timer_config_t::duty_resolution (C++ member), 743
ledc_timer_config_t::freq_hz (C++ member), 743
ledc_timer_config_t::speed_mode (C++ member), 743
ledc_timer_config_t::timer_num (C++ member), 743
LEDC_TIMER_MAX (C++ enumerator), 744
ledc_timer_pause (C++ function), 739
ledc_timer_resume (C++ function), 739
ledc_timer_rst (C++ function), 739
ledc_timer_set (C++ function), 739
ledc_timer_t (C++ enum), 744
ledc_update_duty (C++ function), 736
LEDC_USE_APB_CLK (C++ enumerator), 744
LEDC_USE_REF_TICK (C++ enumerator), 744
LEDC_USE_RTC8M_CLK (C++ enumerator), 744
linenoiseCompletions (C++ type), 1134

M

M_BGE (C 宏), 1882
M_BL (C 宏), 1882
M_BX (C 宏), 1882
M_BXF (C 宏), 1883
M_BXZ (C 宏), 1883
M_LABEL (C 宏), 1882
MALLOC_CAP_32BIT (C 宏), 1286
MALLOC_CAP_8BIT (C 宏), 1286
MALLOC_CAP_DEFAULT (C 宏), 1287
MALLOC_CAP_DMA (C 宏), 1286
MALLOC_CAP_EXEC (C 宏), 1286
MALLOC_CAP_INTERNAL (C 宏), 1287
MALLOC_CAP_INVALID (C 宏), 1287
MALLOC_CAP_IRAM_8BIT (C 宏), 1287
MALLOC_CAP_PID2 (C 宏), 1287
MALLOC_CAP_PID3 (C 宏), 1287
MALLOC_CAP_PID4 (C 宏), 1287
MALLOC_CAP_PID5 (C 宏), 1287
MALLOC_CAP_PID6 (C 宏), 1287
MALLOC_CAP_PID7 (C 宏), 1287
MALLOC_CAP_RETENTION (C 宏), 1287
MALLOC_CAP_SPIRAM (C 宏), 1287
MAX_BLE_DEVNAME_LEN (C 宏), 1018
MAX_BLE_MANUFACTURER_DATA_LEN (C 宏), 1018
MAX_FDS (C 宏), 1098
MAX_PASSPHRASE_LEN (C 宏), 576
MAX_SSID_LEN (C 宏), 576
MAX_WPS_AP_CRED (C 宏), 576
mbc_master_destroy (C++ function), 975
mbc_master_get_cid_info (C++ function), 976
mbc_master_get_parameter (C++ function), 977
mbc_master_init (C++ function), 973
mbc_master_init_tcp (C++ function), 974
mbc_master_send_request (C++ function), 976
mbc_master_set_descriptor (C++ function), 976
mbc_master_set_parameter (C++ function), 977
mbc_master_setup (C++ function), 974
mbc_master_start (C++ function), 974
mbc_slave_check_event (C++ function), 975
mbc_slave_destroy (C++ function), 975
mbc_slave_get_param_info (C++ function), 975
mbc_slave_init (C++ function), 973
mbc_slave_init_tcp (C++ function), 973
mbc_slave_set_descriptor (C++ function), 975
mbc_slave_setup (C++ function), 974
mbc_slave_start (C++ function), 974
MCPWM0A (C++ enumerator), 761
MCPWM0B (C++ enumerator), 761
MCPWM1A (C++ enumerator), 762
MCPWM1B (C++ enumerator), 762
MCPWM2A (C++ enumerator), 762
MCPWM2B (C++ enumerator), 762
MCPWM_ACTION_FORCE_HIGH (C++ enumerator), 752
MCPWM_ACTION_FORCE_LOW (C++ enumerator), 752
MCPWM_ACTION_NO_CHANGE (C++ enumerator), 752
mcpwm_action_on_pwmxa_t (C++ type), 761
mcpwm_action_on_pwmxb_t (C++ type), 761
MCPWM_ACTION_TOGGLE (C++ enumerator), 752
MCPWM_ACTIVE_HIGH_COMPLIMENT_MODE (C++ enumerator), 752
MCPWM_ACTIVE_HIGH_MODE (C++ enumerator), 752
MCPWM_ACTIVE_LOW_COMPLIMENT_MODE (C++ enumerator), 752
MCPWM_ACTIVE_LOW_MODE (C++ enumerator), 752
MCPWM_ACTIVE_RED_FED_FROM_PWMXA (C++ enumerator), 752
MCPWM_ACTIVE_RED_FED_FROM_PWMXB (C++ enumerator), 752
MCPWM_BOTH_EDGE (C++ enumerator), 753
MCPWM_BYPASS_FED (C++ enumerator), 752
MCPWM_BYPASS_RED (C++ enumerator), 752
MCPWM_CAP_0 (C++ enumerator), 762
MCPWM_CAP_1 (C++ enumerator), 762
MCPWM_CAP_2 (C++ enumerator), 762
mcpwm_capture_disable (C++ function), 758
mcpwm_capture_enable (C++ function), 758
mcpwm_capture_on_edge_t (C++ enum), 753
mcpwm_capture_signal_get_edge (C++ function), 759
mcpwm_capture_signal_get_value (C++ function), 759
mcpwm_capture_signal_t (C++ enum), 763
mcpwm_carrier_config_t (C++ class), 760

mcpwm_carrier_config_t::carrier_duty (C++ member), 761
mcpwm_carrier_config_t::carrier_ivt_mode (C++ member), 761
mcpwm_carrier_config_t::carrier_os_mode (C++ member), 761
mcpwm_carrier_config_t::carrier_period (C++ member), 761
mcpwm_carrier_config_t::pulse_width_in_ticks (C++ member), 761
mcpwm_carrier_disable (C++ function), 756
mcpwm_carrier_enable (C++ function), 755
mcpwm_carrier_init (C++ function), 755
mcpwm_carrier_oneshot_mode_disable (C++ function), 756
mcpwm_carrier_oneshot_mode_enable (C++ function), 756
mcpwm_carrier_os_t (C++ enum), 763
MCPWM_CARRIER_OUT_IVT_DIS (C++ enumerator), 763
MCPWM_CARRIER_OUT_IVT_EN (C++ enumerator), 763
mcpwm_carrier_out_ivt_t (C++ enum), 763
mcpwm_carrier_output_invert (C++ function), 757
mcpwm_carrier_set_duty_cycle (C++ function), 756
mcpwm_carrier_set_period (C++ function), 756
mcpwm_config_t (C++ class), 760
mcpwm_config_t::cmpr_a (C++ member), 760
mcpwm_config_t::cmpr_b (C++ member), 760
mcpwm_config_t::counter_mode (C++ member), 760
mcpwm_config_t::duty_mode (C++ member), 760
mcpwm_config_t::frequency (C++ member), 760
MCPWM_COUNTER_MAX (C++ enumerator), 751
mcpwm_counter_type_t (C++ enum), 751
MCPWM_DEADTIME_BYPASS (C++ enumerator), 752
mcpwm_deadtime_disable (C++ function), 757
mcpwm_deadtime_enable (C++ function), 757
MCPWM_DEADTIME_TYPE_MAX (C++ enumerator), 752
mcpwm_deadtime_type_t (C++ enum), 752
MCPWM_DOWN_COUNTER (C++ enumerator), 751
MCPWM_DUTY_MODE_0 (C++ enumerator), 751
MCPWM_DUTY_MODE_1 (C++ enumerator), 751
MCPWM_DUTY_MODE_MAX (C++ enumerator), 752
mcpwm_duty_type_t (C++ enum), 751
MCPWM_FAULT_0 (C++ enumerator), 762
MCPWM_FAULT_1 (C++ enumerator), 762
MCPWM_FAULT_2 (C++ enumerator), 762
mcpwm_fault_deinit (C++ function), 758
mcpwm_fault_init (C++ function), 757
mcpwm_fault_input_level_t (C++ enum), 763
mcpwm_fault_set_cyc_mode (C++ function), 758
mcpwm_fault_set_oneshot_mode (C++ function), 757
mcpwm_fault_signal_t (C++ enum), 763
MCPWM_FORCE_MCPWMXA_HIGH (C 宏), 761
MCPWM_FORCE_MCPWMXA_LOW (C 宏), 761
MCPWM_FORCE_MCPWMXB_HIGH (C 宏), 761
MCPWM_FORCE_MCPWMXB_LOW (C 宏), 761
MCPWM_GEN_A (C++ enumerator), 763
MCPWM_GEN_B (C++ enumerator), 763
MCPWM_GEN_MAX (C++ enumerator), 763
mcpwm_generator_t (C++ enum), 763
mcpwm_get_duty (C++ function), 754
mcpwm_get_frequency (C++ function), 754
mcpwm_gpio_init (C++ function), 753
MCPWM_HAL_GENERATOR_MODE_FORCE_HIGH (C++ enumerator), 751
MCPWM_HAL_GENERATOR_MODE_FORCE_LOW (C++ enumerator), 751
MCPWM_HIGH_LEVEL_TGR (C++ enumerator), 763
mcpwm_init (C++ function), 753
mcpwm_intr_t (C++ enum), 751
mcpwm_io_signals_t (C++ enum), 761
mcpwm_isr_register (C++ function), 759
MCPWM_LL_INTR_CAP0 (C++ enumerator), 751
MCPWM_LL_INTR_CAP1 (C++ enumerator), 751
MCPWM_LL_INTR_CAP2 (C++ enumerator), 751
MCPWM_LOW_LEVEL_TGR (C++ enumerator), 763
MCPWM_NEG_EDGE (C++ enumerator), 753
MCPWM_NO_CHANGE_IN_MCPWMXA (C 宏), 761
MCPWM_NO_CHANGE_IN_MCPWMXB (C 宏), 761
MCPWM_ONESHOT_MODE_DIS (C++ enumerator), 763
MCPWM_ONESHOT_MODE_EN (C++ enumerator), 763
mcpwm_operator_t (C++ type), 761
MCPWM_OPR_A (C 宏), 761
MCPWM_OPR_B (C 宏), 761
MCPWM_OPR_MAX (C 宏), 761
mcpwm_output_action_t (C++ enum), 752
mcpwm_pin_config_t (C++ class), 759
mcpwm_pin_config_t::mcpwm0a_out_num (C++ member), 760
mcpwm_pin_config_t::mcpwm0b_out_num (C++ member), 760
mcpwm_pin_config_t::mcpwm1a_out_num (C++ member), 760
mcpwm_pin_config_t::mcpwm1b_out_num (C++ member), 760
mcpwm_pin_config_t::mcpwm2a_out_num (C++ member), 760
mcpwm_pin_config_t::mcpwm2b_out_num (C++ member), 760
mcpwm_pin_config_t::mcpwm_cap0_in_num (C++ member), 760
mcpwm_pin_config_t::mcpwm_cap1_in_num (C++ member), 760
mcpwm_pin_config_t::mcpwm_cap2_in_num (C++ member), 760

mcpwm_pin_config_t::mcpwm_fault0_in_num (C++ member), 760
mcpwm_pin_config_t::mcpwm_fault1_in_num (C++ member), 760
mcpwm_pin_config_t::mcpwm_fault2_in_num (C++ member), 760
mcpwm_pin_config_t::mcpwm_sync0_in_num (C++ member), 760
mcpwm_pin_config_t::mcpwm_sync1_in_num (C++ member), 760
mcpwm_pin_config_t::mcpwm_sync2_in_num (C++ member), 760
MCPWM_POS_EDGE (C++ enumerator), 753
MCPWM_SELECT_CAP0 (C++ enumerator), 763
MCPWM_SELECT_CAP1 (C++ enumerator), 764
MCPWM_SELECT_CAP2 (C++ enumerator), 764
MCPWM_SELECT_F0 (C++ enumerator), 763
MCPWM_SELECT_F1 (C++ enumerator), 763
MCPWM_SELECT_F2 (C++ enumerator), 763
MCPWM_SELECT_SYNC0 (C++ enumerator), 752
MCPWM_SELECT_SYNC1 (C++ enumerator), 753
MCPWM_SELECT_SYNC2 (C++ enumerator), 753
mcpwm_set_duty (C++ function), 754
mcpwm_set_duty_in_us (C++ function), 754
mcpwm_set_duty_type (C++ function), 754
mcpwm_set_frequency (C++ function), 753
mcpwm_set_pin (C++ function), 753
mcpwm_set_signal_high (C++ function), 755
mcpwm_set_signal_low (C++ function), 755
mcpwm_start (C++ function), 755
mcpwm_stop (C++ function), 755
MCPWM_SYNC_0 (C++ enumerator), 762
MCPWM_SYNC_1 (C++ enumerator), 762
MCPWM_SYNC_2 (C++ enumerator), 762
mcpwm_sync_disable (C++ function), 759
mcpwm_sync_enable (C++ function), 759
mcpwm_sync_signal_t (C++ enum), 752
MCPWM_TIMER_0 (C++ enumerator), 762
MCPWM_TIMER_1 (C++ enumerator), 762
MCPWM_TIMER_2 (C++ enumerator), 762
MCPWM_TIMER_MAX (C++ enumerator), 762
mcpwm_timer_t (C++ enum), 762
MCPWM_TOG_MCPWMXA (C 宏), 761
MCPWM_TOG_MCPWMXB (C 宏), 761
MCPWM_UNIT_0 (C++ enumerator), 762
MCPWM_UNIT_1 (C++ enumerator), 762
MCPWM_UNIT_MAX (C++ enumerator), 762
mcpwm_unit_t (C++ enum), 762
MCPWM_UP_COUNTER (C++ enumerator), 751
MCPWM_UP_DOWN_COUNTER (C++ enumerator), 751
mdns_free (C++ function), 895
mdns_handle_system_event (C++ function), 899
mdns_hostname_set (C++ function), 895
MDNS_IF_AP (C++ enumerator), 900
MDNS_IF_ETH (C++ enumerator), 900
mdns_if_internal (C++ enum), 900
MDNS_IF_MAX (C++ enumerator), 900
MDNS_IF_STA (C++ enumerator), 900
mdns_if_t (C++ type), 900
mdns_init (C++ function), 895
mdns_instance_name_set (C++ function), 895
mdns_ip_addr_s (C++ class), 899
mdns_ip_addr_s::addr (C++ member), 899
mdns_ip_addr_s::next (C++ member), 899
mdns_ip_addr_t (C++ type), 900
MDNS_IP_PROTOCOL_MAX (C++ enumerator), 900
mdns_ip_protocol_t (C++ enum), 900
MDNS_IP_PROTOCOL_V4 (C++ enumerator), 900
MDNS_IP_PROTOCOL_V6 (C++ enumerator), 900
mdns_query (C++ function), 897
mdns_query_a (C++ function), 898
mdns_query_aaaa (C++ function), 898
mdns_query_ptr (C++ function), 897
mdns_query_results_free (C++ function), 897
mdns_query_srv (C++ function), 898
mdns_query_txt (C++ function), 898
mdns_result_s (C++ class), 899
mdns_result_s::addr (C++ member), 899
mdns_result_s::hostname (C++ member), 899
mdns_result_s::instance_name (C++ member), 899
mdns_result_s::ip_protocol (C++ member), 899
mdns_result_s::next (C++ member), 899
mdns_result_s::port (C++ member), 899
mdns_result_s::tcpip_if (C++ member), 899
mdns_result_s::txt (C++ member), 899
mdns_result_s::txt_count (C++ member), 899
mdns_result_t (C++ type), 900
mdns_service_add (C++ function), 895
mdns_service_instance_name_set (C++ function), 896
mdns_service_port_set (C++ function), 896
mdns_service_remove (C++ function), 896
mdns_service_remove_all (C++ function), 897
mdns_service_txt_item_remove (C++ function), 897
mdns_service_txt_item_set (C++ function), 896
mdns_service_txt_set (C++ function), 896
mdns_txt_item_t (C++ class), 899
mdns_txt_item_t::key (C++ member), 899
mdns_txt_item_t::value (C++ member), 899
MDNS_TYPE_A (C 宏), 900
MDNS_TYPE_AAAA (C 宏), 900
MDNS_TYPE_ANY (C 宏), 900
MDNS_TYPE_NSEC (C 宏), 900
MDNS_TYPE_OPT (C 宏), 900
MDNS_TYPE_PTR (C 宏), 900
MDNS_TYPE_SRV (C 宏), 900
MDNS_TYPE_TXT (C 宏), 900
mesh_addr_t (C++ union), 614
mesh_addr_t::addr (C++ member), 614
mesh_addr_t::mip (C++ member), 614

mesh_ap_cfg_t (*C++ class*), 619
mesh_ap_cfg_t::max_connection (*C++ member*), 619
mesh_ap_cfg_t::nonmesh_max_connection (*C++ member*), 619
mesh_ap_cfg_t::password (*C++ member*), 619
MESH_ASSOC_FLAG_NETWORK_FREE (*C 宏*), 622
MESH_ASSOC_FLAG_ROOT_FIXED (*C 宏*), 622
MESH_ASSOC_FLAG_ROOTS_FOUND (*C 宏*), 622
MESH_ASSOC_FLAG_VOTE_IN_PROGRESS (*C 宏*), 622
mesh_cfg_t (*C++ class*), 619
mesh_cfg_t::allow_channel_switch (*C++ member*), 619
mesh_cfg_t::channel (*C++ member*), 619
mesh_cfg_t::crypto_funcs (*C++ member*), 619
mesh_cfg_t::mesh_ap (*C++ member*), 619
mesh_cfg_t::mesh_id (*C++ member*), 619
mesh_cfg_t::router (*C++ member*), 619
MESH_DATA_DROP (*C 宏*), 622
MESH_DATA_ENC (*C 宏*), 621
MESH_DATA_FROMDS (*C 宏*), 622
MESH_DATA_GROUP (*C 宏*), 622
MESH_DATA_NONBLOCK (*C 宏*), 622
MESH_DATA_P2P (*C 宏*), 621
mesh_data_t (*C++ class*), 618
mesh_data_t::data (*C++ member*), 618
mesh_data_t::proto (*C++ member*), 618
mesh_data_t::size (*C++ member*), 618
mesh_data_t::tos (*C++ member*), 618
MESH_DATA_TODS (*C 宏*), 622
mesh_disconnect_reason_t (*C++ enum*), 625
MESH_EVENT_CHANNEL_SWITCH (*C++ enumerator*), 623
mesh_event_channel_switch_t (*C++ class*), 615
mesh_event_channel_switch_t::channel (*C++ member*), 616
MESH_EVENT_CHILD_CONNECTED (*C++ enumerator*), 623
mesh_event_child_connected_t (*C++ type*), 622
MESH_EVENT_CHILD_DISCONNECTED (*C++ enumerator*), 623
mesh_event_child_disconnected_t (*C++ type*), 622
mesh_event_connected_t (*C++ class*), 616
mesh_event_connected_t::connected (*C++ member*), 616
mesh_event_connected_t::duty (*C++ member*), 616
mesh_event_connected_t::self_layer (*C++ member*), 616
mesh_event_disconnected_t (*C++ type*), 622
MESH_EVENT_FIND_NETWORK (*C++ enumerator*), 624
mesh_event_find_network_t (*C++ class*), 616
mesh_event_find_network_t::channel (*C++ member*), 616
mesh_event_find_network_t::router_bssid (*C++ member*), 616
mesh_event_id_t (*C++ enum*), 623
mesh_event_info_t (*C++ union*), 614
mesh_event_info_t::channel_switch (*C++ member*), 614
mesh_event_info_t::child_connected (*C++ member*), 614
mesh_event_info_t::child_disconnected (*C++ member*), 614
mesh_event_info_t::connected (*C++ member*), 614
mesh_event_info_t::disconnected (*C++ member*), 614
mesh_event_info_t::find_network (*C++ member*), 615
mesh_event_info_t::layer_change (*C++ member*), 614
mesh_event_info_t::network_state (*C++ member*), 615
mesh_event_info_t::no_parent (*C++ member*), 614
mesh_event_info_t::ps_duty (*C++ member*), 615
mesh_event_info_t::root_addr (*C++ member*), 615
mesh_event_info_t::root_conflict (*C++ member*), 615
mesh_event_info_t::root_fixed (*C++ member*), 615
mesh_event_info_t::router_switch (*C++ member*), 615
mesh_event_info_t::routing_table (*C++ member*), 614
mesh_event_info_t::scan_done (*C++ member*), 615
mesh_event_info_t::switch_req (*C++ member*), 615
mesh_event_info_t::toDS_state (*C++ member*), 614
mesh_event_info_t::vote_started (*C++ member*), 615
MESH_EVENT_LAYER_CHANGE (*C++ enumerator*), 623
mesh_event_layer_change_t (*C++ class*), 616
mesh_event_layer_change_t::new_layer (*C++ member*), 616
MESH_EVENT_MAX (*C++ enumerator*), 624
MESH_EVENT_NETWORK_STATE (*C++ enumerator*), 624
mesh_event_network_state_t (*C++ class*), 617
mesh_event_network_state_t::is_rootless (*C++ member*), 618
MESH_EVENT_NO_PARENT_FOUND (*C++ enumerator*), 623

mesh_event_no_parent_found_t (C++ class), 616
mesh_event_no_parent_found_t::scan_times (C++ member), 616
MESH_EVENT_PARENT_CONNECTED (C++ enumerator), 623
MESH_EVENT_PARENT_DISCONNECTED (C++ enumerator), 623
MESH_EVENT_PS_CHILD_DUTY (C++ enumerator), 624
MESH_EVENT_PS_DEVICE_DUTY (C++ enumerator), 624
mesh_event_ps_duty_t (C++ class), 618
mesh_event_ps_duty_t::child_connected (C++ member), 618
mesh_event_ps_duty_t::duty (C++ member), 618
MESH_EVENT_PS_PARENT_DUTY (C++ enumerator), 624
MESH_EVENT_ROOT_ADDRESS (C++ enumerator), 623
mesh_event_root_address_t (C++ type), 622
MESH_EVENT_ROOT_ASKED_YIELD (C++ enumerator), 623
mesh_event_root_conflict_t (C++ class), 617
mesh_event_root_conflict_t::addr (C++ member), 617
mesh_event_root_conflict_t::capacity (C++ member), 617
mesh_event_root_conflict_t::rssi (C++ member), 617
MESH_EVENT_ROOT_FIXED (C++ enumerator), 623
mesh_event_root_fixed_t (C++ class), 617
mesh_event_root_fixed_t::is_fixed (C++ member), 617
MESH_EVENT_ROOT_SWITCH_ACK (C++ enumerator), 623
MESH_EVENT_ROOT_SWITCH_REQ (C++ enumerator), 623
mesh_event_root_switch_req_t (C++ class), 616
mesh_event_root_switch_req_t::rc_addr (C++ member), 617
mesh_event_root_switch_req_t::reason (C++ member), 617
MESH_EVENT_ROUTER_SWITCH (C++ enumerator), 624
mesh_event_router_switch_t (C++ type), 622
MESH_EVENT_ROUTING_TABLE_ADD (C++ enumerator), 623
mesh_event_routing_table_change_t (C++ class), 617
mesh_event_routing_table_change_t::rt_size_change (C++ member), 617
mesh_event_routing_table_change_t::rt_size_new (C++ member), 617
MESH_EVENT_ROUTING_TABLE_REMOVE (C++ enumerator), 623
MESH_EVENT_SCAN_DONE (C++ enumerator), 624
mesh_event_scan_done_t (C++ class), 617
mesh_event_scan_done_t::number (C++ member), 617
MESH_EVENT_STARTED (C++ enumerator), 623
MESH_EVENT_STOP_RECONNECTION (C++ enumerator), 624
MESH_EVENT_STOPPED (C++ enumerator), 623
MESH_EVENT_TODS_STATE (C++ enumerator), 623
mesh_event_toDS_state_t (C++ enum), 626
MESH_EVENT_VOTE_STARTED (C++ enumerator), 623
mesh_event_vote_started_t (C++ class), 616
mesh_event_vote_started_t::attempts (C++ member), 616
mesh_event_vote_started_t::rc_addr (C++ member), 616
mesh_event_vote_started_t::reason (C++ member), 616
MESH_EVENT_VOTE_STOPPED (C++ enumerator), 623
MESH_IDLE (C++ enumerator), 624
MESH_INIT_CONFIG_DEFAULT (C 宏), 622
MESH_LEAF (C++ enumerator), 624
MESH_MPS (C 宏), 620
MESH_MTU (C 宏), 620
MESH_NODE (C++ enumerator), 624
MESH_OPT_RECV_DS_ADDR (C 宏), 622
MESH_OPT_SEND_GROUP (C 宏), 622
mesh_opt_t (C++ class), 618
mesh_opt_t::len (C++ member), 618
mesh_opt_t::type (C++ member), 618
mesh_opt_t::val (C++ member), 618
MESH_PROTO_AP (C++ enumerator), 625
MESH_PROTO_BIN (C++ enumerator), 624
MESH_PROTO_HTTP (C++ enumerator), 624
MESH_PROTO_JSON (C++ enumerator), 624
MESH_PROTO_MQTT (C++ enumerator), 624
MESH_PROTO_STA (C++ enumerator), 625
mesh_proto_t (C++ enum), 624
MESH_PS_DEVICE_DUTY_DEMAND (C 宏), 622
MESH_PS_DEVICE_DUTY_REQUEST (C 宏), 622
MESH_PS_NETWORK_DUTY_APPLIED_ENTIRE (C 宏), 622
MESH_PS_NETWORK_DUTY_APPLIED_UPLINK (C 宏), 622
MESH_PS_NETWORK_DUTY_MASTER (C 宏), 622
mesh_rc_config_t (C++ union), 615
mesh_rc_config_t::attempts (C++ member), 615
mesh_rc_config_t::rc_addr (C++ member), 615
MESH_REASON_CYCLIC (C++ enumerator), 625
MESH_REASON_DIFF_ID (C++ enumerator), 625
MESH_REASON_EMPTY_PASSWORD (C++ enumerator), 625

MESH_REASON_IE_UNKNOWN (C++ enumerator), 625
MESH_REASON_LEAF (C++ enumerator), 625
MESH_REASON_PARENT_IDLE (C++ enumerator), 625
MESH_REASON_PARENT_STOPPED (C++ enumerator), 625
MESH_REASON_PARENT_UNENCRYPTED (C++ enumerator), 625
MESH_REASON_PARENT_WORSE (C++ enumerator), 625
MESH_REASON_ROOTS (C++ enumerator), 625
MESH_REASON_SCAN_FAIL (C++ enumerator), 625
MESH_REASON_WAIVE_ROOT (C++ enumerator), 625
MESH_ROOT (C++ enumerator), 624
MESH_ROOT_LAYER (C 宏), 620
mesh_router_t (C++ class), 618
mesh_router_t::allow_router_switch (C++ member), 619
mesh_router_t::bssid (C++ member), 618
mesh_router_t::password (C++ member), 618
mesh_router_t::ssid (C++ member), 618
mesh_router_t::ssid_len (C++ member), 618
mesh_rx_pending_t (C++ class), 620
mesh_rx_pending_t::toDS (C++ member), 620
mesh_rx_pending_t::toSelf (C++ member), 620
MESH_STA (C++ enumerator), 624
MESH_TODS_REACHABLE (C++ enumerator), 626
MESH_TODS_UNREACHABLE (C++ enumerator), 626
MESH_TOPO_CHAIN (C++ enumerator), 626
MESH_TOPO_TREE (C++ enumerator), 626
MESH_TOS_DEF (C++ enumerator), 625
MESH_TOS_E2E (C++ enumerator), 625
MESH_TOS_P2P (C++ enumerator), 625
mesh_tos_t (C++ enum), 625
mesh_tx_pending_t (C++ class), 620
mesh_tx_pending_t::broadcast (C++ member), 620
mesh_tx_pending_t::mgmt (C++ member), 620
mesh_tx_pending_t::to_child (C++ member), 620
mesh_tx_pending_t::to_child_p2p (C++ member), 620
mesh_tx_pending_t::to_parent (C++ member), 620
mesh_tx_pending_t::to_parent_p2p (C++ member), 620
mesh_type_t (C++ enum), 624
MESH_VOTE_REASON_CHILD_INITIATED (C++ enumerator), 625
MESH_VOTE_REASON_ROOT_INITIATED (C++ enumerator), 625
mesh_vote_reason_t (C++ enum), 625
mesh_vote_t (C++ class), 619
mesh_vote_t::config (C++ member), 619
mesh_vote_t::is_rc_specified (C++ member), 619
mesh_vote_t::percentage (C++ member), 619
MessageBufferHandle_t (C++ type), 1264
mip_t (C++ class), 615
mip_t::ip4 (C++ member), 615
mip_t::port (C++ member), 615
MQTT_CONNECTION_ACCEPTED (C++ enumerator), 972
MQTT_CONNECTION_REFUSE_BAD_USERNAME (C++ enumerator), 972
MQTT_CONNECTION_REFUSE_ID_REJECTED (C++ enumerator), 972
MQTT_CONNECTION_REFUSE_NOT_AUTHORIZED (C++ enumerator), 972
MQTT_CONNECTION_REFUSE_PROTOCOL (C++ enumerator), 972
MQTT_CONNECTION_REFUSE_SERVER_UNAVAILABLE (C++ enumerator), 972
MQTT_ERROR_TYPE_CONNECTION_REFUSED (C++ enumerator), 972
MQTT_ERROR_TYPE_ESP_TLS (C 宏), 970
MQTT_ERROR_TYPE_NONE (C++ enumerator), 972
MQTT_ERROR_TYPE_TCP_TRANSPORT (C++ enumerator), 972
MQTT_EVENT_ANY (C++ enumerator), 971
MQTT_EVENT_BEFORE_CONNECT (C++ enumerator), 972
mqtt_event_callback_t (C++ type), 971
MQTT_EVENT_CONNECTED (C++ enumerator), 971
MQTT_EVENT_DATA (C++ enumerator), 971
MQTT_EVENT_DELETED (C++ enumerator), 972
MQTT_EVENT_DISCONNECTED (C++ enumerator), 971
MQTT_EVENT_ERROR (C++ enumerator), 971
MQTT_EVENT_PUBLISHED (C++ enumerator), 971
MQTT_EVENT_SUBSCRIBED (C++ enumerator), 971
MQTT_EVENT_UNSUBSCRIBED (C++ enumerator), 971
MQTT_PROTOCOL_UNDEFINED (C++ enumerator), 972
MQTT_PROTOCOL_V_3_1 (C++ enumerator), 973
MQTT_PROTOCOL_V_3_1_1 (C++ enumerator), 973
MQTT_TRANSPORT_OVER_SSL (C++ enumerator), 972
MQTT_TRANSPORT_OVER_TCP (C++ enumerator), 972
MQTT_TRANSPORT_OVER_WS (C++ enumerator), 972
MQTT_TRANSPORT_OVER_WSS (C++ enumerator), 972
MQTT_TRANSPORT_UNKNOWN (C++ enumerator), 972
multi_heap_aligned_alloc (C++ function), 1289
multi_heap_aligned_free (C++ function), 1290
multi_heap_check (C++ function), 1291

multi_heap_dump (C++ function), 1291
multi_heap_free (C++ function), 1290
multi_heap_free_size (C++ function), 1291
multi_heap_get_allocated_size (C++ function), 1290
multi_heap_get_info (C++ function), 1291
multi_heap_handle_t (C++ type), 1292
multi_heap_info_t (C++ class), 1291
multi_heap_info_t::allocated_blocks (C++ member), 1292
multi_heap_info_t::free_blocks (C++ member), 1292
multi_heap_info_t::largest_free_block (C++ member), 1292
multi_heap_info_t::minimum_free_bytes (C++ member), 1292
multi_heap_info_t::total_allocated_bytes (C++ member), 1292
multi_heap_info_t::total_blocks (C++ member), 1292
multi_heap_info_t::total_free_bytes (C++ member), 1292
multi_heap_malloc (C++ function), 1289
multi_heap_minimum_free_size (C++ function), 1291
multi_heap_realloc (C++ function), 1290
multi_heap_register (C++ function), 1290
multi_heap_set_lock (C++ function), 1290

N

name_uuid (C++ class), 1018
name_uuid::name (C++ member), 1018
name_uuid::uuid (C++ member), 1018
nvs_close (C++ function), 1079
nvs_commit (C++ function), 1079
NVS_DEFAULT_PART_NAME (C 宏), 1083
nvs_entry_find (C++ function), 1080
nvs_entry_info (C++ function), 1081
nvs_entry_info_t (C++ class), 1081
nvs_entry_info_t::key (C++ member), 1081
nvs_entry_info_t::namespace_name (C++ member), 1081
nvs_entry_info_t::type (C++ member), 1081
nvs_entry_next (C++ function), 1081
nvs_erase_all (C++ function), 1079
nvs_erase_key (C++ function), 1078
nvs_flash_deinit (C++ function), 1072
nvs_flash_deinit_partition (C++ function), 1072
nvs_flash_erase (C++ function), 1072
nvs_flash_erase_partition (C++ function), 1072
nvs_flash_erase_partition_ptr (C++ function), 1073
nvs_flash_generate_keys (C++ function), 1073
nvs_flash_init (C++ function), 1071
nvs_flash_init_partition (C++ function), 1071
nvs_flash_init_partition_ptr (C++ function), 1072
nvs_flash_read_security_cfg (C++ function), 1073
nvs_flash_secure_init (C++ function), 1073
nvs_flash_secure_init_partition (C++ function), 1073
nvs_get_blob (C++ function), 1077
nvs_get_i16 (C++ function), 1076
nvs_get_i32 (C++ function), 1076
nvs_get_i64 (C++ function), 1076
nvs_get_i8 (C++ function), 1075
nvs_get_stats (C++ function), 1079
nvs_get_str (C++ function), 1076
nvs_get_u16 (C++ function), 1076
nvs_get_u32 (C++ function), 1076
nvs_get_u64 (C++ function), 1076
nvs_get_u8 (C++ function), 1076
nvs_get_used_entry_count (C++ function), 1080
nvs_handle (C++ type), 1083
nvs_handle_t (C++ type), 1083
nvs_iterator_t (C++ type), 1083
NVS_KEY_NAME_MAX_SIZE (C 宏), 1083
NVS_KEY_SIZE (C 宏), 1074
nvs_open (C++ function), 1077
nvs_open_from_partition (C++ function), 1077
nvs_open_mode (C++ type), 1083
nvs_open_mode_t (C++ enum), 1083
NVS_PART_NAME_MAX_SIZE (C 宏), 1083
NVS_READONLY (C++ enumerator), 1083
NVS_READWRITE (C++ enumerator), 1083
nvs_release_iterator (C++ function), 1081
nvs_sec_cfg_t (C++ class), 1074
nvs_sec_cfg_t::eky (C++ member), 1074
nvs_sec_cfg_t::tky (C++ member), 1074
nvs_set_blob (C++ function), 1078
nvs_set_i16 (C++ function), 1074
nvs_set_i32 (C++ function), 1075
nvs_set_i64 (C++ function), 1075
nvs_set_i8 (C++ function), 1074
nvs_set_str (C++ function), 1075
nvs_set_u16 (C++ function), 1075
nvs_set_u32 (C++ function), 1075
nvs_set_u64 (C++ function), 1075
nvs_set_u8 (C++ function), 1074
nvs_stats_t (C++ class), 1081
nvs_stats_t::free_entries (C++ member), 1081
nvs_stats_t::namespace_count (C++ member), 1081
nvs_stats_t::total_entries (C++ member), 1081
nvs_stats_t::used_entries (C++ member), 1081

NVS_TYPE_ANY (*C++ enumerator*), 1084
NVS_TYPE_BLOB (*C++ enumerator*), 1084
NVS_TYPE_I16 (*C++ enumerator*), 1083
NVS_TYPE_I32 (*C++ enumerator*), 1083
NVS_TYPE_I64 (*C++ enumerator*), 1084
NVS_TYPE_I8 (*C++ enumerator*), 1083
NVS_TYPE_STR (*C++ enumerator*), 1084
nvs_type_t (*C++ enum*), 1083
NVS_TYPE_U16 (*C++ enumerator*), 1083
NVS_TYPE_U32 (*C++ enumerator*), 1083
NVS_TYPE_U64 (*C++ enumerator*), 1083
NVS_TYPE_U8 (*C++ enumerator*), 1083

O

OTA_SIZE_UNKNOWN (*C 宏*), 1338
OTA_WITH_SEQUENTIAL_WRITES (*C 宏*), 1339

P

PCNT_CHANNEL_0 (*C++ enumerator*), 772
PCNT_CHANNEL_1 (*C++ enumerator*), 772
PCNT_CHANNEL_MAX (*C++ enumerator*), 772
pcnt_channel_t (*C++ enum*), 772
pcnt_config_t (*C++ class*), 770
pcnt_config_t::channel (*C++ member*), 771
pcnt_config_t::counter_h_lim (*C++ member*), 770
pcnt_config_t::counter_l_lim (*C++ member*), 770
pcnt_config_t::ctrl_gpio_num (*C++ member*), 770
pcnt_config_t::hctrl_mode (*C++ member*), 770
pcnt_config_t::lctrl_mode (*C++ member*), 770
pcnt_config_t::neg_mode (*C++ member*), 770
pcnt_config_t::pos_mode (*C++ member*), 770
pcnt_config_t::pulse_gpio_num (*C++ member*), 770
pcnt_config_t::unit (*C++ member*), 771
PCNT_COUNT_DEC (*C++ enumerator*), 772
PCNT_COUNT_DIS (*C++ enumerator*), 772
PCNT_COUNT_INC (*C++ enumerator*), 772
PCNT_COUNT_MAX (*C++ enumerator*), 772
pcnt_count_mode_t (*C++ enum*), 772
pcnt_counter_clear (*C++ function*), 766
pcnt_counter_pause (*C++ function*), 766
pcnt_counter_resume (*C++ function*), 766
pcnt_ctrl_mode_t (*C++ enum*), 771
pcnt_event_disable (*C++ function*), 767
pcnt_event_enable (*C++ function*), 767
PCNT_EVT_H_LIM (*C++ enumerator*), 772
PCNT_EVT_L_LIM (*C++ enumerator*), 772
PCNT_EVT_MAX (*C++ enumerator*), 772
PCNT_EVT_THRES_0 (*C++ enumerator*), 772
PCNT_EVT_THRES_1 (*C++ enumerator*), 772
pcnt_evt_type_t (*C++ enum*), 772
PCNT_EVT_ZERO (*C++ enumerator*), 772
pcnt_filter_disable (*C++ function*), 768
pcnt_filter_enable (*C++ function*), 768
pcnt_get_counter_value (*C++ function*), 766
pcnt_get_event_status (*C++ function*), 767
pcnt_get_event_value (*C++ function*), 767
pcnt_get_filter_value (*C++ function*), 769
pcnt_intr_disable (*C++ function*), 766
pcnt_intr_enable (*C++ function*), 766
pcnt_isr_handle_t (*C++ type*), 770
pcnt_isr_handler_add (*C++ function*), 769
pcnt_isr_handler_remove (*C++ function*), 770
pcnt_isr_register (*C++ function*), 768
pcnt_isr_service_install (*C++ function*), 769
pcnt_isr_service_uninstall (*C++ function*), 770
pcnt_isr_unregister (*C++ function*), 767
PCNT_MODE_DISABLE (*C++ enumerator*), 772
PCNT_MODE_KEEP (*C++ enumerator*), 771
PCNT_MODE_MAX (*C++ enumerator*), 772
PCNT_MODE_REVERSE (*C++ enumerator*), 771
PCNT_PIN_NOT_USED (*C 宏*), 771
PCNT_PORT_0 (*C++ enumerator*), 771
PCNT_PORT_MAX (*C++ enumerator*), 771
pcnt_port_t (*C++ enum*), 771
pcnt_set_event_value (*C++ function*), 767
pcnt_set_filter_value (*C++ function*), 768
pcnt_set_mode (*C++ function*), 769
pcnt_set_pin (*C++ function*), 768
PCNT_UNIT_0 (*C++ enumerator*), 771
PCNT_UNIT_1 (*C++ enumerator*), 771
PCNT_UNIT_2 (*C++ enumerator*), 771
PCNT_UNIT_3 (*C++ enumerator*), 771
PCNT_UNIT_4 (*C++ enumerator*), 771
PCNT_UNIT_5 (*C++ enumerator*), 771
PCNT_UNIT_6 (*C++ enumerator*), 771
PCNT_UNIT_7 (*C++ enumerator*), 771
pcnt_unit_config (*C++ function*), 765
PCNT_UNIT_MAX (*C++ enumerator*), 771
pcnt_unit_t (*C++ enum*), 771
pcQueueGetName (*C++ function*), 1200
pcTaskGetName (*C++ function*), 1182
pcTimerGetName (*C++ function*), 1231
PDM_PCM_CONV_DISABLE (*C++ enumerator*), 733
PDM_PCM_CONV_ENABLE (*C++ enumerator*), 733
pdm_pcm_conv_t (*C++ enum*), 733
PendedFunction_t (*C++ type*), 1240
PROTOCOM_SEC0 (*C++ enumerator*), 986
PROTOCOM_SEC1 (*C++ enumerator*), 986
PROTOCOM_SEC_CUSTOM (*C++ enumerator*), 986
protocomm_add_endpoint (*C++ function*), 1012
protocomm_ble_config (*C++ class*), 1018
protocomm_ble_config::ble_bonding (*C++ member*), 1018
protocomm_ble_config::ble_sm_sc (*C++ member*), 1018
protocomm_ble_config::device_name (*C++ member*), 1018

protocomm_ble_config::manufacturer_data (C++ member), 1018
protocomm_ble_config::manufacturer_data_len (C++ member), 1018
protocomm_ble_config::nu_lookup (C++ member), 1018
protocomm_ble_config::nu_lookup_count (C++ member), 1018
protocomm_ble_config::service_uuid (C++ member), 1018
protocomm_ble_config_t (C++ type), 1018
protocomm_ble_name_uuid_t (C++ type), 1018
protocomm_ble_start (C++ function), 1017
protocomm_ble_stop (C++ function), 1017
protocomm_close_session (C++ function), 1012
protocomm_delete (C++ function), 1012
protocomm_http_server_config_t (C++ class), 1016
protocomm_http_server_config_t::port (C++ member), 1017
protocomm_http_server_config_t::stack_size (C++ member), 1017
protocomm_http_server_config_t::task_priority (C++ member), 1017
protocomm_httpd_config_data_t (C++ union), 1016
protocomm_httpd_config_data_t::config (C++ member), 1016
protocomm_httpd_config_data_t::handle (C++ member), 1016
protocomm_httpd_config_t (C++ class), 1017
protocomm_httpd_config_t::data (C++ member), 1017
protocomm_httpd_config_t::ext_handle_provided (C++ member), 1017
PROTOCOMM_HTTPD_DEFAULT_CONFIG (C 宏), 1017
protocomm_httpd_start (C++ function), 1016
protocomm_httpd_stop (C++ function), 1016
protocomm_new (C++ function), 1011
protocomm_open_session (C++ function), 1012
protocomm_remove_endpoint (C++ function), 1012
protocomm_req_handle (C++ function), 1013
protocomm_req_handler_t (C++ type), 1014
protocomm_security (C++ class), 1015
protocomm_security::cleanup (C++ member), 1015
protocomm_security::close_transport_session (C++ member), 1015
protocomm_security::decrypt (C++ member), 1015
protocomm_security::encrypt (C++ member), 1015
protocomm_security::init (C++ member), 1015
protocomm_security::new_transport_session (C++ member), 1015
protocomm_security::security_req_handler (C++ member), 1015
protocomm_security::ver (C++ member), 1015
protocomm_security_handle_t (C++ type), 1015
protocomm_security_pop (C++ class), 1014
protocomm_security_pop::data (C++ member), 1015
protocomm_security_pop::len (C++ member), 1015
protocomm_security_pop_t (C++ type), 1015
protocomm_security_t (C++ type), 1015
protocomm_set_security (C++ function), 1013
protocomm_set_version (C++ function), 1014
protocomm_t (C++ type), 1014
protocomm_unset_security (C++ function), 1013
protocomm_unset_version (C++ function), 1014
PROV_DATA_FLAGS_FLAG (C 宏), 367
PROV_DATA_IV_INDEX_FLAG (C 宏), 367
PROV_DATA_NET_IDX_FLAG (C 宏), 367
PROXY_FILTER_BLACKLIST (C++ enumerator), 381
PROXY_FILTER_WHITELIST (C++ enumerator), 381
psk_hint_key_t (C++ type), 911
psk_key_hint (C++ class), 907
psk_key_hint::hint (C++ member), 907
psk_key_hint::key (C++ member), 907
psk_key_hint::key_size (C++ member), 907
PTHREAD_STACK_MIN (C 宏), 1155
pvTaskGetThreadLocalStoragePointer (C++ function), 1183
pvTimerGetTimerID (C++ function), 1228
pxTaskGetStackStart (C++ function), 1183

Q

QueueHandle_t (C++ type), 1211
QueueSetHandle_t (C++ type), 1212
QueueSetMemberHandle_t (C++ type), 1212

R

R0 (C 宏), 1880
R1 (C 宏), 1880
R2 (C 宏), 1880
R3 (C 宏), 1880
RINGBUF_TYPE_ALLOWSPLIT (C++ enumerator), 1278
RINGBUF_TYPE_BYTEBUF (C++ enumerator), 1278
RINGBUF_TYPE_MAX (C++ enumerator), 1278
RINGBUF_TYPE_NOSPLIT (C++ enumerator), 1278
RingbufferType_t (C++ enum), 1278
RingbufHandle_t (C++ type), 1278
RMT_BASECLK_APB (C++ enumerator), 788
RMT_BASECLK_MAX (C++ enumerator), 789

RMT_BASECLK_REF (C++ enumerator), 788
RMT_CARRIER_LEVEL_HIGH (C++ enumerator), 789
RMT_CARRIER_LEVEL_LOW (C++ enumerator), 789
RMT_CARRIER_LEVEL_MAX (C++ enumerator), 789
rmt_carrier_level_t (C++ enum), 789
RMT_CHANNEL_0 (C++ enumerator), 788
RMT_CHANNEL_1 (C++ enumerator), 788
RMT_CHANNEL_2 (C++ enumerator), 788
RMT_CHANNEL_3 (C++ enumerator), 788
RMT_CHANNEL_4 (C++ enumerator), 788
RMT_CHANNEL_5 (C++ enumerator), 788
RMT_CHANNEL_6 (C++ enumerator), 788
RMT_CHANNEL_7 (C++ enumerator), 788
RMT_CHANNEL_BUSY (C++ enumerator), 789
RMT_CHANNEL_FLAGS_AWARE_DFS (C 宏), 787
RMT_CHANNEL_IDLE (C++ enumerator), 789
RMT_CHANNEL_MAX (C++ enumerator), 788
rmt_channel_status_result_t (C++ class), 788
rmt_channel_status_result_t::status (C++ member), 788
rmt_channel_status_t (C++ enum), 789
rmt_channel_t (C++ enum), 788
RMT_CHANNEL_UNINIT (C++ enumerator), 789
rmt_clr_intr_enable_mask (C++ function), 785
rmt_config (C++ function), 782
rmt_config_t (C++ class), 786
rmt_config_t::channel (C++ member), 786
rmt_config_t::clk_div (C++ member), 786
rmt_config_t::flags (C++ member), 787
rmt_config_t::gpio_num (C++ member), 786
rmt_config_t::mem_block_num (C++ member), 786
rmt_config_t::rmt_mode (C++ member), 786
rmt_config_t::rx_config (C++ member), 787
rmt_config_t::tx_config (C++ member), 787
RMT_DATA_MODE_FIFO (C++ enumerator), 789
RMT_DATA_MODE_MAX (C++ enumerator), 789
RMT_DATA_MODE_MEM (C++ enumerator), 789
rmt_data_mode_t (C++ enum), 789
RMT_DEFAULT_CONFIG_RX (C 宏), 787
RMT_DEFAULT_CONFIG_TX (C 宏), 787
rmt_driver_install (C++ function), 783
rmt_driver_uninstall (C++ function), 783
rmt_fill_tx_items (C++ function), 783
rmt_get_channel_status (C++ function), 783
rmt_get_clk_div (C++ function), 777
rmt_get_counter_clock (C++ function), 783
rmt_get_idle_level (C++ function), 781
rmt_get_mem_block_num (C++ function), 778
rmt_get_mem_pd (C++ function), 778
rmt_get_memory_owner (C++ function), 780
rmt_get_ringbuf_handle (C++ function), 784
rmt_get_rx_idle_thresh (C++ function), 777
rmt_get_source_clk (C++ function), 781
rmt_get_status (C++ function), 781
rmt_get_tx_loop_mode (C++ function), 780
RMT_IDLE_LEVEL_HIGH (C++ enumerator), 789
RMT_IDLE_LEVEL_LOW (C++ enumerator), 789
RMT_IDLE_LEVEL_MAX (C++ enumerator), 789
rmt_idle_level_t (C++ enum), 789
rmt_isr_deregister (C++ function), 783
rmt_isr_handle_t (C++ type), 787
rmt_isr_register (C++ function), 782
RMT_MEM_ITEM_NUM (C 宏), 787
RMT_MEM_OWNER_MAX (C++ enumerator), 788
RMT_MEM_OWNER_RX (C++ enumerator), 788
rmt_mem_owner_t (C++ enum), 788
RMT_MEM_OWNER_TX (C++ enumerator), 788
rmt_memory_rw_rst (C++ function), 785
RMT_MODE_MAX (C++ enumerator), 789
RMT_MODE_RX (C++ enumerator), 789
rmt_mode_t (C++ enum), 789
RMT_MODE_TX (C++ enumerator), 789
rmt_register_tx_end_callback (C++ function), 785
rmt_rx_config_t (C++ class), 786
rmt_rx_config_t::filter_en (C++ member), 786
rmt_rx_config_t::filter_ticks_thresh (C++ member), 786
rmt_rx_config_t::idle_threshold (C++ member), 786
rmt_rx_memory_reset (C++ function), 779
rmt_rx_start (C++ function), 779
rmt_rx_stop (C++ function), 779
rmt_set_clk_div (C++ function), 777
rmt_set_err_intr_en (C++ function), 781
rmt_set_idle_level (C++ function), 781
rmt_set_intr_enable_mask (C++ function), 785
rmt_set_mem_block_num (C++ function), 777
rmt_set_mem_pd (C++ function), 778
rmt_set_memory_owner (C++ function), 779
rmt_set_pin (C++ function), 782
rmt_set_rx_filter (C++ function), 780
rmt_set_rx_idle_thresh (C++ function), 777
rmt_set_rx_intr_en (C++ function), 781
rmt_set_source_clk (C++ function), 780
rmt_set_tx_carrier (C++ function), 778
rmt_set_tx_intr_en (C++ function), 782
rmt_set_tx_loop_mode (C++ function), 780
rmt_set_tx_thr_intr_en (C++ function), 782
rmt_source_clk_t (C++ enum), 788
rmt_translator_get_context (C++ function), 785
rmt_translator_init (C++ function), 784
rmt_translator_set_context (C++ function), 785
rmt_tx_config_t (C++ class), 786
rmt_tx_config_t::carrier_duty_percent (C++ member), 786
rmt_tx_config_t::carrier_en (C++ member), 786

rmt_tx_config_t::carrier_freq_hz (C++ member), 786
rmt_tx_config_t::carrier_level (C++ member), 786
rmt_tx_config_t::idle_level (C++ member), 786
rmt_tx_config_t::idle_output_en (C++ member), 786
rmt_tx_config_t::loop_en (C++ member), 786
rmt_tx_end_callback_t (C++ class), 787
rmt_tx_end_callback_t::arg (C++ member), 787
rmt_tx_end_callback_t::function (C++ member), 787
rmt_tx_end_fn_t (C++ type), 787
rmt_tx_memory_reset (C++ function), 779
rmt_tx_start (C++ function), 779
rmt_tx_stop (C++ function), 779
rmt_wait_tx_done (C++ function), 784
rmt_write_items (C++ function), 784
rmt_write_sample (C++ function), 785
ROLE_FAST_PROV (C++ enumerator), 381
ROLE_NODE (C++ enumerator), 381
ROLE_PROVISIONER (C++ enumerator), 381
rtc_gpio_deinit (C++ function), 705
rtc_gpio_force_hold_dis_all (C++ function), 708
rtc_gpio_force_hold_en_all (C++ function), 708
rtc_gpio_get_drive_capability (C++ function), 707
rtc_gpio_get_level (C++ function), 705
rtc_gpio_hold_dis (C++ function), 707
rtc_gpio_hold_en (C++ function), 707
rtc_gpio_init (C++ function), 705
RTC_GPIO_IS_VALID_GPIO (C 宏), 708
rtc_gpio_is_valid_gpio (C++ function), 705
rtc_gpio_isolate (C++ function), 707
RTC_GPIO_MODE_DISABLED (C++ enumerator), 708
RTC_GPIO_MODE_INPUT_ONLY (C++ enumerator), 708
RTC_GPIO_MODE_INPUT_OUTPUT (C++ enumerator), 708
RTC_GPIO_MODE_INPUT_OUTPUT_OD (C++ enumerator), 708
RTC_GPIO_MODE_OUTPUT_OD (C++ enumerator), 708
RTC_GPIO_MODE_OUTPUT_ONLY (C++ enumerator), 708
rtc_gpio_mode_t (C++ enum), 708
rtc_gpio_pulldown_dis (C++ function), 706
rtc_gpio_pulldown_en (C++ function), 706
rtc_gpio_pullup_dis (C++ function), 706
rtc_gpio_pullup_en (C++ function), 706
rtc_gpio_set_direction (C++ function), 706
rtc_gpio_set_direction_in_sleep (C++ function), 706
rtc_gpio_set_drive_capability (C++ function), 707
rtc_gpio_set_level (C++ function), 705
rtc_gpio_wakeup_disable (C++ function), 708
rtc_gpio_wakeup_enable (C++ function), 708
rtc_io_number_get (C++ function), 705
RTC_SLOW_MEM (C 宏), 1883

S

sample_to_rmt_t (C++ type), 787
SC_EVENT_FOUND_CHANNEL (C++ enumerator), 587
SC_EVENT_GOT_SSID_PSWD (C++ enumerator), 587
SC_EVENT_SCAN_DONE (C++ enumerator), 587
SC_EVENT_SEND_ACK_DONE (C++ enumerator), 587
SC_TYPE_AIRKISS (C++ enumerator), 587
SC_TYPE_ESPTOUCH (C++ enumerator), 587
SC_TYPE_ESPTOUCH_AIRKISS (C++ enumerator), 587
SC_TYPE_ESPTOUCH_V2 (C++ enumerator), 587
sdio_event_cb_t (C++ type), 810
sdio_slave_buf_handle_t (C++ type), 810
sdio_slave_clear_host_int (C++ function), 809
sdio_slave_config_t (C++ class), 809
sdio_slave_config_t::event_cb (C++ member), 809
sdio_slave_config_t::flags (C++ member), 809
sdio_slave_config_t::recv_buffer_size (C++ member), 809
sdio_slave_config_t::send_queue_size (C++ member), 809
sdio_slave_config_t::sending_mode (C++ member), 809
sdio_slave_config_t::timing (C++ member), 809
sdio_slave_deinit (C++ function), 806
SDIO_SLAVE_FLAG_DAT2_DISABLED (C 宏), 809
SDIO_SLAVE_FLAG_HOST_INTR_DISABLED (C 宏), 809
SDIO_SLAVE_FLAG_INTERNAL_PULLUP (C 宏), 810
sdio_slave_get_host_intena (C++ function), 808
SDIO_SLAVE_HOSTINT_BIT0 (C++ enumerator), 805
SDIO_SLAVE_HOSTINT_BIT1 (C++ enumerator), 805
SDIO_SLAVE_HOSTINT_BIT2 (C++ enumerator), 805
SDIO_SLAVE_HOSTINT_BIT3 (C++ enumerator), 805
SDIO_SLAVE_HOSTINT_BIT4 (C++ enumerator), 805

SDIO_SLAVE_HOSTINT_BIT5 (C++ enumerator), 806
SDIO_SLAVE_HOSTINT_BIT6 (C++ enumerator), 806
SDIO_SLAVE_HOSTINT_BIT7 (C++ enumerator), 806
SDIO_SLAVE_HOSTINT_SEND_NEW_PACKET (C++ enumerator), 806
sdio_slave_hostint_t (C++ enum), 805
sdio_slave_initialize (C++ function), 806
sdio_slave_read_reg (C++ function), 808
sdio_slave_recv (C++ function), 807
sdio_slave_recv_get_buf (C++ function), 807
sdio_slave_recv_load_buf (C++ function), 807
SDIO_SLAVE_RECV_MAX_BUFFER (C 宏), 809
sdio_slave_recv_register_buf (C++ function), 807
sdio_slave_recv_unregister_buf (C++ function), 807
sdio_slave_reset (C++ function), 807
sdio_slave_send_get_finished (C++ function), 808
sdio_slave_send_host_int (C++ function), 808
SDIO_SLAVE_SEND_PACKET (C++ enumerator), 806
sdio_slave_send_queue (C++ function), 807
SDIO_SLAVE_SEND_STREAM (C++ enumerator), 806
sdio_slave_sending_mode_t (C++ enum), 806
sdio_slave_set_host_intena (C++ function), 808
sdio_slave_start (C++ function), 806
sdio_slave_stop (C++ function), 806
SDIO_SLAVE_TIMING_NSEND_NSAMPLE (C++ enumerator), 806
SDIO_SLAVE_TIMING_NSEND_PSAMPLE (C++ enumerator), 806
SDIO_SLAVE_TIMING_PSEND_NSAMPLE (C++ enumerator), 806
SDIO_SLAVE_TIMING_PSEND_PSAMPLE (C++ enumerator), 806
sdio_slave_timing_t (C++ enum), 806
sdio_slave_transmit (C++ function), 808
sdio_slave_wait_int (C++ function), 809
sdio_slave_write_reg (C++ function), 808
sdmmc_card_init (C++ function), 1058
sdmmc_card_print_info (C++ function), 1058
sdmmc_card_t (C++ class), 1063
sdmmc_card_t::cid (C++ member), 1064
sdmmc_card_t::csd (C++ member), 1064
sdmmc_card_t::ext_csd (C++ member), 1064
sdmmc_card_t::host (C++ member), 1064
sdmmc_card_t::is_ddr (C++ member), 1064
sdmmc_card_t::is_mem (C++ member), 1064
sdmmc_card_t::is_mmc (C++ member), 1064
sdmmc_card_t::is_sdio (C++ member), 1064
sdmmc_card_t::log_bus_width (C++ member), 1064
sdmmc_card_t::max_freq_khz (C++ member), 1064
sdmmc_card_t::num_io_functions (C++ member), 1064
sdmmc_card_t::ocr (C++ member), 1064
sdmmc_card_t::raw_cid (C++ member), 1064
sdmmc_card_t::rca (C++ member), 1064
sdmmc_card_t::reserved (C++ member), 1064
sdmmc_card_t::scr (C++ member), 1064
sdmmc_cid_t (C++ class), 1061
sdmmc_cid_t::date (C++ member), 1062
sdmmc_cid_t::mfg_id (C++ member), 1061
sdmmc_cid_t::name (C++ member), 1061
sdmmc_cid_t::oem_id (C++ member), 1061
sdmmc_cid_t::revision (C++ member), 1062
sdmmc_cid_t::serial (C++ member), 1062
sdmmc_command_t (C++ class), 1062
sdmmc_command_t::arg (C++ member), 1062
sdmmc_command_t::blklen (C++ member), 1062
sdmmc_command_t::data (C++ member), 1062
sdmmc_command_t::datalen (C++ member), 1062
sdmmc_command_t::error (C++ member), 1063
sdmmc_command_t::flags (C++ member), 1062
sdmmc_command_t::opcode (C++ member), 1062
sdmmc_command_t::response (C++ member), 1062
sdmmc_command_t::timeout_ms (C++ member), 1063
sdmmc_csd_t (C++ class), 1061
sdmmc_csd_t::capacity (C++ member), 1061
sdmmc_csd_t::card_command_class (C++ member), 1061
sdmmc_csd_t::csd_ver (C++ member), 1061
sdmmc_csd_t::mmc_ver (C++ member), 1061
sdmmc_csd_t::read_block_len (C++ member), 1061
sdmmc_csd_t::sector_size (C++ member), 1061
sdmmc_csd_t::tr_speed (C++ member), 1061
sdmmc_ext_csd_t (C++ class), 1062
sdmmc_ext_csd_t::power_class (C++ member), 1062
SDMMC_FREQ_26M (C 宏), 1065
SDMMC_FREQ_52M (C 宏), 1065
SDMMC_FREQ_DEFAULT (C 宏), 1064
SDMMC_FREQ_HIGHSPEED (C 宏), 1065
SDMMC_FREQ_PROBING (C 宏), 1065
SDMMC_HOST_DEFAULT (C 宏), 794
sdmmc_host_deinit (C++ function), 793
sdmmc_host_do_transaction (C++ function), 792
SDMMC_HOST_FLAG_1BIT (C 宏), 1064
SDMMC_HOST_FLAG_4BIT (C 宏), 1064

SDMMC_HOST_FLAG_8BIT (*C 宏*), 1064
SDMMC_HOST_FLAG_DDR (*C 宏*), 1064
SDMMC_HOST_FLAG_DEINIT_ARG (*C 宏*), 1064
SDMMC_HOST_FLAG_SPI (*C 宏*), 1064
sdmmc_host_get_slot_width (*C++ function*), 792
sdmmc_host_init (*C++ function*), 791
sdmmc_host_init_slot (*C++ function*), 791
sdmmc_host_io_int_enable (*C++ function*), 793
sdmmc_host_io_int_wait (*C++ function*), 793
sdmmc_host_pullup_en (*C++ function*), 793
sdmmc_host_set_bus_ddr_mode (*C++ function*), 792
sdmmc_host_set_bus_width (*C++ function*), 792
sdmmc_host_set_card_clk (*C++ function*), 792
SDMMC_HOST_SLOT_0 (*C 宏*), 794
SDMMC_HOST_SLOT_1 (*C 宏*), 794
sdmmc_host_t (*C++ class*), 1063
sdmmc_host_t::command_timeout_ms (*C++ member*), 1063
sdmmc_host_t::deinit (*C++ member*), 1063
sdmmc_host_t::deinit_p (*C++ member*), 1063
sdmmc_host_t::do_transaction (*C++ member*), 1063
sdmmc_host_t::flags (*C++ member*), 1063
sdmmc_host_t::get_bus_width (*C++ member*), 1063
sdmmc_host_t::init (*C++ member*), 1063
sdmmc_host_t::io_int_enable (*C++ member*), 1063
sdmmc_host_t::io_int_wait (*C++ member*), 1063
sdmmc_host_t::io_voltage (*C++ member*), 1063
sdmmc_host_t::max_freq_khz (*C++ member*), 1063
sdmmc_host_t::set_bus_ddr_mode (*C++ member*), 1063
sdmmc_host_t::set_bus_width (*C++ member*), 1063
sdmmc_host_t::set_card_clk (*C++ member*), 1063
sdmmc_host_t::slot (*C++ member*), 1063
sdmmc_io_enable_int (*C++ function*), 1060
sdmmc_io_get_cis_data (*C++ function*), 1060
sdmmc_io_print_cis_info (*C++ function*), 1061
sdmmc_io_read_blocks (*C++ function*), 1059
sdmmc_io_read_byte (*C++ function*), 1058
sdmmc_io_read_bytes (*C++ function*), 1059
sdmmc_io_wait_int (*C++ function*), 1060
sdmmc_io_write_blocks (*C++ function*), 1060
sdmmc_io_write_byte (*C++ function*), 1058
sdmmc_io_write_bytes (*C++ function*), 1059
sdmmc_read_sectors (*C++ function*), 1058
sdmmc_response_t (*C++ type*), 1065
sdmmc_scr_t (*C++ class*), 1062
sdmmc_scr_t::bus_width (*C++ member*), 1062
sdmmc_scr_t::sd_spec (*C++ member*), 1062
SDMMC_SLOT_CONFIG_DEFAULT (*C 宏*), 794
sdmmc_slot_config_t (*C++ class*), 793
sdmmc_slot_config_t::flags (*C++ member*), 793
sdmmc_slot_config_t::gpio_cd (*C++ member*), 793
sdmmc_slot_config_t::gpio_wp (*C++ member*), 793
sdmmc_slot_config_t::width (*C++ member*), 793
SDMMC_SLOT_FLAG_INTERNAL_PULLUP (*C 宏*), 794
SDMMC_SLOT_NO_CD (*C 宏*), 794
SDMMC_SLOT_NO_WP (*C 宏*), 794
SDMMC_SLOT_WIDTH_DEFAULT (*C 宏*), 794
sdmmc_switch_func_rsp_t (*C++ class*), 1062
sdmmc_switch_func_rsp_t::data (*C++ member*), 1062
sdmmc_write_sectors (*C++ function*), 1058
SDSPI_DEFAULT_HOST (*C 宏*), 797
sdspi_dev_handle_t (*C++ type*), 798
SDSPI_DEVICE_CONFIG_DEFAULT (*C 宏*), 798
sdspi_device_config_t (*C++ class*), 797
sdspi_device_config_t::gpio_cd (*C++ member*), 797
sdspi_device_config_t::gpio_cs (*C++ member*), 797
sdspi_device_config_t::gpio_int (*C++ member*), 797
sdspi_device_config_t::gpio_wp (*C++ member*), 797
sdspi_device_config_t::host_id (*C++ member*), 797
SDSPI_HOST_DEFAULT (*C 宏*), 797
sdspi_host_deinit (*C++ function*), 796
sdspi_host_do_transaction (*C++ function*), 795
sdspi_host_init (*C++ function*), 795
sdspi_host_init_device (*C++ function*), 795
sdspi_host_init_slot (*C++ function*), 796
sdspi_host_io_int_enable (*C++ function*), 796
sdspi_host_io_int_wait (*C++ function*), 796
sdspi_host_remove_device (*C++ function*), 795
sdspi_host_set_card_clk (*C++ function*), 796
SDSPI_SLOT_CONFIG_DEFAULT (*C 宏*), 798
sdspi_slot_config_t (*C++ class*), 797
sdspi_slot_config_t::dma_channel (*C++ member*), 797
sdspi_slot_config_t::gpio_cd (*C++ member*), 797
sdspi_slot_config_t::gpio_cs (*C++ member*), 797
sdspi_slot_config_t::gpio_int (*C++*

member), 797
sdspi_slot_config_t::gpio_miso (*C++ member*), 797
sdspi_slot_config_t::gpio_mosi (*C++ member*), 797
sdspi_slot_config_t::gpio_sck (*C++ member*), 797
sdspi_slot_config_t::gpio_wp (*C++ member*), 797
SDSPI_SLOT_NO_CD (*C 宏*), 797
SDSPI_SLOT_NO_INT (*C 宏*), 798
SDSPI_SLOT_NO_WP (*C 宏*), 798
SemaphoreHandle_t (*C++ type*), 1224
semBINARY_SEMAPHORE_QUEUE_LENGTH (*C 宏*), 1212
semGIVE_BLOCK_TIME (*C 宏*), 1212
semSEMAPHORE_QUEUE_ITEM_LENGTH (*C 宏*), 1212
shared_stack_function (*C++ type*), 1312
shutdown_handler_t (*C++ type*), 1328
SIGMADELTA_CHANNEL_0 (*C++ enumerator*), 812
SIGMADELTA_CHANNEL_1 (*C++ enumerator*), 812
SIGMADELTA_CHANNEL_2 (*C++ enumerator*), 813
SIGMADELTA_CHANNEL_3 (*C++ enumerator*), 813
SIGMADELTA_CHANNEL_4 (*C++ enumerator*), 813
SIGMADELTA_CHANNEL_5 (*C++ enumerator*), 813
SIGMADELTA_CHANNEL_6 (*C++ enumerator*), 813
SIGMADELTA_CHANNEL_7 (*C++ enumerator*), 813
SIGMADELTA_CHANNEL_MAX (*C++ enumerator*), 813
sigmadelta_channel_t (*C++ enum*), 812
sigmadelta_config (*C++ function*), 811
sigmadelta_config_t (*C++ class*), 812
sigmadelta_config_t::channel (*C++ member*), 812
sigmadelta_config_t::sigmadelta_duty (*C++ member*), 812
sigmadelta_config_t::sigmadelta_gpio (*C++ member*), 812
sigmadelta_config_t::sigmadelta_prescale (*C++ member*), 812
SIGMADELTA_PORT_0 (*C++ enumerator*), 812
SIGMADELTA_PORT_MAX (*C++ enumerator*), 812
sigmadelta_port_t (*C++ enum*), 812
sigmadelta_set_duty (*C++ function*), 811
sigmadelta_set_pin (*C++ function*), 812
sigmadelta_set_prescale (*C++ function*), 811
slave_transaction_cb_t (*C++ type*), 840
smartconfig_event_got_ssid_pswd_t (*C++ class*), 586
smartconfig_event_got_ssid_pswd_t::bssid (*C++ member*), 587
smartconfig_event_got_ssid_pswd_t::bssid_set (*C++ member*), 586
smartconfig_event_got_ssid_pswd_t::cellphone_num (*C++ member*), 587
smartconfig_event_got_ssid_pswd_t::password (*C++ member*), 586
smartconfig_event_got_ssid_pswd_t::ssid (*C++ member*), 586
smartconfig_event_got_ssid_pswd_t::token (*C++ member*), 587
smartconfig_event_got_ssid_pswd_t::type (*C++ member*), 587
smartconfig_event_t (*C++ enum*), 587
SMARTCONFIG_START_CONFIG_DEFAULT (*C 宏*), 587
smartconfig_start_config_t (*C++ class*), 587
smartconfig_start_config_t::enable_log (*C++ member*), 587
smartconfig_start_config_t::esp_touch_v2_enable_c (*C++ member*), 587
smartconfig_start_config_t::esp_touch_v2_key (*C++ member*), 587
smartconfig_type_t (*C++ enum*), 587
sntp_get_sync_interval (*C++ function*), 1363
sntp_get_sync_mode (*C++ function*), 1362
sntp_get_sync_status (*C++ function*), 1362
sntp_restart (*C++ function*), 1363
sntp_set_sync_interval (*C++ function*), 1363
sntp_set_sync_mode (*C++ function*), 1362
sntp_set_sync_status (*C++ function*), 1362
sntp_set_time_sync_notification_cb (*C++ function*), 1362
SNTP_SYNC_MODE_IMMED (*C++ enumerator*), 1363
SNTP_SYNC_MODE_SMOOTH (*C++ enumerator*), 1363
sntp_sync_mode_t (*C++ enum*), 1363
SNTP_SYNC_STATUS_COMPLETED (*C++ enumerator*), 1363
SNTP_SYNC_STATUS_IN_PROGRESS (*C++ enumerator*), 1363
SNTP_SYNC_STATUS_RESET (*C++ enumerator*), 1363
sntp_sync_status_t (*C++ enum*), 1363
sntp_sync_time (*C++ function*), 1362
sntp_sync_time_cb_t (*C++ type*), 1363
SPI1_HOST (*C++ enumerator*), 823
SPI2_HOST (*C++ enumerator*), 823
SPI3_HOST (*C++ enumerator*), 823
spi_bus_add_device (*C++ function*), 827
spi_bus_add_flash_device (*C++ function*), 1039
spi_bus_config_t (*C++ class*), 825
spi_bus_config_t::flags (*C++ member*), 825
spi_bus_config_t::intr_flags (*C++ member*), 825
spi_bus_config_t::max_transfer_sz (*C++ member*), 825
spi_bus_config_t::miso_io_num (*C++ member*), 825
spi_bus_config_t::mosi_io_num (*C++ member*), 825
spi_bus_config_t::quadhd_io_num (*C++ member*), 825

spi_bus_config_t::quadwp_io_num (C++ member), 825
spi_bus_config_t::sclk_io_num (C++ member), 825
spi_bus_free (C++ function), 824
spi_bus_initialize (C++ function), 824
spi_bus_remove_device (C++ function), 827
spi_bus_remove_flash_device (C++ function), 1039
spi_cal_clock (C++ function), 829
SPI_CMD_HD_EN_QPI (C++ enumerator), 824
SPI_CMD_HD_INT0 (C++ enumerator), 824
SPI_CMD_HD_INT1 (C++ enumerator), 824
SPI_CMD_HD_INT2 (C++ enumerator), 824
SPI_CMD_HD_RDBUF (C++ enumerator), 824
SPI_CMD_HD_RDDMA (C++ enumerator), 824
SPI_CMD_HD_SEG_END (C++ enumerator), 824
SPI_CMD_HD_WR_END (C++ enumerator), 824
SPI_CMD_HD_WRBUF (C++ enumerator), 824
SPI_CMD_HD_WRDMA (C++ enumerator), 824
spi_command_t (C++ enum), 824
spi_common_dma_t (C++ enum), 826
SPI_DEVICE_3WIRE (C 宏), 832
spi_device_acquire_bus (C++ function), 829
SPI_DEVICE_BIT_LSBFIRST (C 宏), 832
SPI_DEVICE_CLK_AS_CS (C 宏), 833
SPI_DEVICE_DDRCLK (C 宏), 833
spi_device_get_trans_result (C++ function), 827
SPI_DEVICE_HALFDUPLEX (C 宏), 833
spi_device_handle_t (C++ type), 833
spi_device_interface_config_t (C++ class), 830
spi_device_interface_config_t::address_bits (C++ member), 830
spi_device_interface_config_t::clock_speed_hz (C++ member), 830
spi_device_interface_config_t::command_bits (C++ member), 830
spi_device_interface_config_t::cs_ena_posttrans (C++ member), 830
spi_device_interface_config_t::cs_ena_pretrans (C++ member), 830
spi_device_interface_config_t::dummy_bits (C++ member), 830
spi_device_interface_config_t::duty_cycle_pos (C++ member), 830
spi_device_interface_config_t::flags (C++ member), 831
spi_device_interface_config_t::input_delay_ns (C++ member), 830
spi_device_interface_config_t::mode (C++ member), 830
spi_device_interface_config_t::post_cb (C++ member), 831
spi_device_interface_config_t::pre_cb (C++ member), 831
spi_device_interface_config_t::queue_size (C++ member), 831
spi_device_interface_config_t::spics_io_num (C++ member), 830
SPI_DEVICE_NO_DUMMY (C 宏), 833
spi_device_polling_end (C++ function), 828
spi_device_polling_start (C++ function), 828
spi_device_polling_transmit (C++ function), 829
SPI_DEVICE_POSITIVE_CS (C 宏), 833
spi_device_queue_trans (C++ function), 827
spi_device_release_bus (C++ function), 829
SPI_DEVICE_RXBIT_LSBFIRST (C 宏), 832
spi_device_transmit (C++ function), 828
SPI_DEVICE_TXBIT_LSBFIRST (C 宏), 832
SPI_DMA_CH1 (C++ enumerator), 826
SPI_DMA_CH2 (C++ enumerator), 826
SPI_DMA_CH_AUTO (C++ enumerator), 826
spi_dma_chan_t (C++ type), 826
SPI_DMA_DISABLED (C++ enumerator), 826
SPI_EV_BUF_RX (C++ enumerator), 823
SPI_EV_BUF_TX (C++ enumerator), 823
SPI_EV_CMD9 (C++ enumerator), 823
SPI_EV_CMDA (C++ enumerator), 824
SPI_EV_RECV (C++ enumerator), 823
SPI_EV_RECV_DMA_READY (C++ enumerator), 823
SPI_EV_SEND (C++ enumerator), 823
SPI_EV_SEND_DMA_READY (C++ enumerator), 823
SPI_EV_TRANS (C++ enumerator), 824
spi_event_t (C++ enum), 823
spi_flash_chip_t (C++ type), 1045
SPI_FLASH_CONFIG_CONF_BITS (C 宏), 1047
SPI_FLASH_DIO (C++ enumerator), 1048
SPI_FLASH_DOUT (C++ enumerator), 1048
SPI_FLASH_FASTRD (C++ enumerator), 1048
spi_flash_host_driver_s (C++ class), 1046
spi_flash_host_driver_s::check_suspend (C++ member), 1047
spi_flash_host_driver_s::common_command (C++ member), 1046
spi_flash_host_driver_s::configure_host_io_mode (C++ member), 1047
spi_flash_host_driver_s::dev_config (C++ member), 1046
spi_flash_host_driver_s::erase_block (C++ member), 1046
spi_flash_host_driver_s::erase_chip (C++ member), 1046
spi_flash_host_driver_s::erase_sector (C++ member), 1046
spi_flash_host_driver_s::flush_cache (C++ member), 1047
spi_flash_host_driver_s::host_status (C++ member), 1047
spi_flash_host_driver_s::poll_cmd_done (C++ member), 1047
spi_flash_host_driver_s::program_page (C++ member), 1046

spi_flash_host_driver_s::read (C++ member), 1046
spi_flash_host_driver_s::read_data_slicer (C++ member), 1046
spi_flash_host_driver_s::read_id (C++ member), 1046
spi_flash_host_driver_s::read_status (C++ member), 1046
spi_flash_host_driver_s::resume (C++ member), 1047
spi_flash_host_driver_s::set_write_protect (C++ member), 1046
spi_flash_host_driver_s::supports_direct_read (C++ member), 1046
spi_flash_host_driver_s::supports_direct_write (C++ member), 1046
spi_flash_host_driver_s::sus_setup (C++ member), 1047
spi_flash_host_driver_s::suspend (C++ member), 1047
spi_flash_host_driver_s::write_data_slicer (C++ member), 1046
spi_flash_host_driver_t (C++ type), 1047
spi_flash_host_inst_t (C++ class), 1045
spi_flash_host_inst_t::driver (C++ member), 1046
SPI_FLASH_QIO (C++ enumerator), 1048
SPI_FLASH_QOUT (C++ enumerator), 1048
SPI_FLASH_READ_MODE_MAX (C++ enumerator), 1048
SPI_FLASH_READ_MODE_MIN (C 宏), 1047
SPI_FLASH_SLOWRD (C++ enumerator), 1048
spi_flash_sus_cmd_conf (C++ class), 1045
spi_flash_sus_cmd_conf::cmd_rdsr (C++ member), 1045
spi_flash_sus_cmd_conf::res_cmd (C++ member), 1045
spi_flash_sus_cmd_conf::reserved (C++ member), 1045
spi_flash_sus_cmd_conf::sus_cmd (C++ member), 1045
spi_flash_sus_cmd_conf::sus_mask (C++ member), 1045
SPI_FLASH_TRANS_FLAG_BYTE_SWAP (C 宏), 1047
SPI_FLASH_TRANS_FLAG_CMD16 (C 宏), 1047
SPI_FLASH_TRANS_FLAG_IGNORE_BASEIO (C 宏), 1047
spi_flash_trans_t (C++ class), 1045
spi_flash_trans_t::address (C++ member), 1045
spi_flash_trans_t::address_bitlen (C++ member), 1045
spi_flash_trans_t::command (C++ member), 1045
spi_flash_trans_t::dummy_bitlen (C++ member), 1045
spi_flash_trans_t::flags (C++ member), 1045
spi_flash_trans_t::miso_data (C++ member), 1045
spi_flash_trans_t::miso_len (C++ member), 1045
spi_flash_trans_t::mosi_data (C++ member), 1045
spi_flash_trans_t::mosi_len (C++ member), 1045
spi_flash_trans_t::reserved (C++ member), 1045
SPI_FLASH_YIELD_REQ_SUSPEND (C 宏), 1044
SPI_FLASH_YIELD_REQ_YIELD (C 宏), 1044
SPI_FLASH_YIELD_STA_RESUME (C 宏), 1044
spi_get_actual_clock (C++ function), 829
spi_get_freq_limit (C++ function), 830
spi_get_timing (C++ function), 829
spi_host_device_t (C++ enum), 823
spi_line_mode_t (C++ class), 823
spi_line_mode_t::addr_lines (C++ member), 823
spi_line_mode_t::cmd_lines (C++ member), 823
spi_line_mode_t::data_lines (C++ member), 823
SPI_MASTER_FREQ_10M (C 宏), 832
SPI_MASTER_FREQ_11M (C 宏), 832
SPI_MASTER_FREQ_13M (C 宏), 832
SPI_MASTER_FREQ_16M (C 宏), 832
SPI_MASTER_FREQ_20M (C 宏), 832
SPI_MASTER_FREQ_26M (C 宏), 832
SPI_MASTER_FREQ_40M (C 宏), 832
SPI_MASTER_FREQ_80M (C 宏), 832
SPI_MASTER_FREQ_8M (C 宏), 832
SPI_MASTER_FREQ_9M (C 宏), 832
SPI_MAX_DMA_LEN (C 宏), 825
SPI_SLAVE_BIT_LSBFIRST (C 宏), 840
spi_slave_free (C++ function), 838
spi_slave_get_trans_result (C++ function), 838
spi_slave_initialize (C++ function), 837
spi_slave_interface_config_t (C++ class), 839
spi_slave_interface_config_t::flags (C++ member), 839
spi_slave_interface_config_t::mode (C++ member), 839
spi_slave_interface_config_t::post_setup_cb (C++ member), 839
spi_slave_interface_config_t::post_trans_cb (C++ member), 839
spi_slave_interface_config_t::queue_size (C++ member), 839
spi_slave_interface_config_t::spics_io_num (C++ member), 839
spi_slave_queue_trans (C++ function), 838
SPI_SLAVE_RXBIT_LSBFIRST (C 宏), 840
spi_slave_transaction_t (C++ class), 839

spi_slave_transaction_t (C++ type), 840
spi_slave_transaction_t::length (C++ member), 839
spi_slave_transaction_t::rx_buffer (C++ member), 840
spi_slave_transaction_t::trans_len (C++ member), 839
spi_slave_transaction_t::tx_buffer (C++ member), 840
spi_slave_transaction_t::user (C++ member), 840
spi_slave_transmit (C++ function), 838
SPI_SLAVE_TXBIT_LSBFIRST (C 宏), 840
SPI_SWAP_DATA_RX (C 宏), 826
SPI_SWAP_DATA_TX (C 宏), 825
SPI_TRANS_MODE_DIO (C 宏), 833
SPI_TRANS_MODE_DIOQIO_ADDR (C 宏), 833
SPI_TRANS_MODE_QIO (C 宏), 833
SPI_TRANS_USE_RXDATA (C 宏), 833
SPI_TRANS_USE_TXDATA (C 宏), 833
SPI_TRANS_VARIABLE_ADDR (C 宏), 833
SPI_TRANS_VARIABLE_CMD (C 宏), 833
SPI_TRANS_VARIABLE_DUMMY (C 宏), 833
spi_transaction_ext_t (C++ class), 832
spi_transaction_ext_t::address_bits (C++ member), 832
spi_transaction_ext_t::base (C++ member), 832
spi_transaction_ext_t::command_bits (C++ member), 832
spi_transaction_ext_t::dummy_bits (C++ member), 832
spi_transaction_t (C++ class), 831
spi_transaction_t (C++ type), 833
spi_transaction_t::addr (C++ member), 831
spi_transaction_t::cmd (C++ member), 831
spi_transaction_t::flags (C++ member), 831
spi_transaction_t::length (C++ member), 831
spi_transaction_t::rx_buffer (C++ member), 831
spi_transaction_t::rx_data (C++ member), 832
spi_transaction_t::rxlength (C++ member), 831
spi_transaction_t::tx_buffer (C++ member), 831
spi_transaction_t::tx_data (C++ member), 831
spi_transaction_t::user (C++ member), 831
SPICOMMON_BUSFLAG_DUAL (C 宏), 826
SPICOMMON_BUSFLAG_GPIO_PINS (C 宏), 826
SPICOMMON_BUSFLAG_IOMUX_PINS (C 宏), 826
SPICOMMON_BUSFLAG_MASTER (C 宏), 826
SPICOMMON_BUSFLAG_MISO (C 宏), 826
SPICOMMON_BUSFLAG_MOSI (C 宏), 826
SPICOMMON_BUSFLAG_NATIVE_PINS (C 宏), 826
SPICOMMON_BUSFLAG_QUAD (C 宏), 826
SPICOMMON_BUSFLAG_SCLK (C 宏), 826
SPICOMMON_BUSFLAG_SLAVE (C 宏), 826
SPICOMMON_BUSFLAG_WPHD (C 宏), 826
StaticRingbuffer_t (C++ type), 1278
StreamBufferHandle_t (C++ type), 1256
SYSTEM_EVENT_ACTION_TX_STATUS (C++ enumerator), 1170
system_event_ap_probe_req_rx_t (C++ type), 1169
SYSTEM_EVENT_AP_PROBEREQRECVED (C++ enumerator), 1170
SYSTEM_EVENT_AP_STA_GOT_IP6 (C 宏), 1168
SYSTEM_EVENT_AP_STACONNECTED (C++ enumerator), 1170
system_event_ap_staconnected_t (C++ type), 1169
SYSTEM_EVENT_AP_STADISCONNECTED (C++ enumerator), 1170
system_event_ap_stadisconnected_t (C++ type), 1169
SYSTEM_EVENT_AP_STAIPASSIGNED (C++ enumerator), 1170
system_event_ap_staipassigned_t (C++ type), 1169
SYSTEM_EVENT_AP_START (C++ enumerator), 1170
SYSTEM_EVENT_AP_STOP (C++ enumerator), 1170
system_event_cb_t (C++ type), 1169
SYSTEM_EVENT_ETH_CONNECTED (C++ enumerator), 1171
SYSTEM_EVENT_ETH_DISCONNECTED (C++ enumerator), 1171
SYSTEM_EVENT_ETH_GOT_IP (C++ enumerator), 1171
SYSTEM_EVENT_ETH_START (C++ enumerator), 1171
SYSTEM_EVENT_ETH_STOP (C++ enumerator), 1171
SYSTEM_EVENT_FTM_REPORT (C++ enumerator), 1170
system_event_ftm_report_t (C++ type), 1169
SYSTEM_EVENT_GOT_IP6 (C++ enumerator), 1171
system_event_got_ip6_t (C++ type), 1169
system_event_handler_t (C++ type), 1169
system_event_id_t (C++ enum), 1169
system_event_info_t (C++ union), 1168
system_event_info_t::ap_probereqrecved (C++ member), 1168
system_event_info_t::ap_staipassigned (C++ member), 1168
system_event_info_t::auth_change (C++ member), 1168
system_event_info_t::connected (C++ member), 1168
system_event_info_t::disconnected (C++ member), 1168
system_event_info_t::ftm_report (C++

member), 1168
system_event_info_t::got_ip (*C++ member*), 1168
system_event_info_t::got_ip6 (*C++ member*), 1168
system_event_info_t::scan_done (*C++ member*), 1168
system_event_info_t::sta_connected (*C++ member*), 1168
system_event_info_t::sta_disconnected (*C++ member*), 1168
system_event_info_t::sta_er_fail_reason (*C++ member*), 1168
system_event_info_t::sta_er_pin (*C++ member*), 1168
system_event_info_t::sta_er_success (*C++ member*), 1168
SYSTEM_EVENT_MAX (*C++ enumerator*), 1171
SYSTEM_EVENT_ROC_DONE (*C++ enumerator*), 1170
SYSTEM_EVENT_SCAN_DONE (*C++ enumerator*), 1169
SYSTEM_EVENT_STA_AUTHMODE_CHANGE (*C++ enumerator*), 1170
system_event_sta_authmode_change_t (*C++ type*), 1169
SYSTEM_EVENT_STA_BEACON_TIMEOUT (*C++ enumerator*), 1170
SYSTEM_EVENT_STA_BSS_RSSI_LOW (*C++ enumerator*), 1170
SYSTEM_EVENT_STA_CONNECTED (*C++ enumerator*), 1170
system_event_sta_connected_t (*C++ type*), 1169
SYSTEM_EVENT_STA_DISCONNECTED (*C++ enumerator*), 1170
system_event_sta_disconnected_t (*C++ type*), 1169
SYSTEM_EVENT_STA_GOT_IP (*C++ enumerator*), 1170
system_event_sta_got_ip_t (*C++ type*), 1169
SYSTEM_EVENT_STA_LOST_IP (*C++ enumerator*), 1170
system_event_sta_scan_done_t (*C++ type*), 1169
SYSTEM_EVENT_STA_START (*C++ enumerator*), 1170
SYSTEM_EVENT_STA_STOP (*C++ enumerator*), 1170
SYSTEM_EVENT_STA_WPS_ER_FAILED (*C++ enumerator*), 1170
SYSTEM_EVENT_STA_WPS_ER_PBC_OVERLAP (*C++ enumerator*), 1170
SYSTEM_EVENT_STA_WPS_ER_PIN (*C++ enumerator*), 1170
system_event_sta_wps_er_pin_t (*C++ type*), 1169
SYSTEM_EVENT_STA_WPS_ER_SUCCESS (*C++ enumerator*), 1170
system_event_sta_wps_er_success_t (*C++ type*), 1169
SYSTEM_EVENT_STA_WPS_ER_TIMEOUT (*C++ enumerator*), 1170
system_event_sta_wps_fail_reason_t (*C++ type*), 1169
system_event_t (*C++ class*), 1168
system_event_t::event_id (*C++ member*), 1168
system_event_t::event_info (*C++ member*), 1168
SYSTEM_EVENT_WIFI_READY (*C++ enumerator*), 1169

T

taskDISABLE_INTERRUPTS (*C 宏*), 1192
taskENABLE_INTERRUPTS (*C 宏*), 1192
taskENTER_CRITICAL (*C 宏*), 1192
taskENTER_CRITICAL_FROM_ISR (*C 宏*), 1192
taskENTER_CRITICAL_ISR (*C 宏*), 1192
taskEXIT_CRITICAL (*C 宏*), 1192
taskEXIT_CRITICAL_FROM_ISR (*C 宏*), 1192
taskEXIT_CRITICAL_ISR (*C 宏*), 1192
TaskHandle_t (*C++ type*), 1193
TaskHookFunction_t (*C++ type*), 1193
taskSCHEDULER_NOT_STARTED (*C 宏*), 1192
taskSCHEDULER_RUNNING (*C 宏*), 1192
taskSCHEDULER_SUSPENDED (*C 宏*), 1192
taskYIELD (*C 宏*), 1192
TIMER_0 (*C++ enumerator*), 690
TIMER_1 (*C++ enumerator*), 690
TIMER_ALARM_DIS (*C++ enumerator*), 691
TIMER_ALARM_EN (*C++ enumerator*), 691
TIMER_ALARM_MAX (*C++ enumerator*), 691
timer_alarm_t (*C++ enum*), 691
TIMER_AUTORELOAD_DIS (*C++ enumerator*), 691
TIMER_AUTORELOAD_EN (*C++ enumerator*), 691
TIMER_AUTORELOAD_MAX (*C++ enumerator*), 691
timer_autoreload_t (*C++ enum*), 691
TIMER_BASE_CLK (*C 宏*), 689
timer_config_t (*C++ class*), 690
timer_config_t::alarm_en (*C++ member*), 690
timer_config_t::auto_reload (*C++ member*), 690
timer_config_t::counter_dir (*C++ member*), 690
timer_config_t::counter_en (*C++ member*), 690
timer_config_t::divider (*C++ member*), 690
timer_config_t::intr_type (*C++ member*), 690
timer_count_dir_t (*C++ enum*), 690
TIMER_COUNT_DOWN (*C++ enumerator*), 690
TIMER_COUNT_MAX (*C++ enumerator*), 690
TIMER_COUNT_UP (*C++ enumerator*), 690
timer_deinit (*C++ function*), 687

timer_disable_intr (C++ function), 687
timer_enable_intr (C++ function), 687
timer_get_alarm_value (C++ function), 685
timer_get_config (C++ function), 687
timer_get_counter_time_sec (C++ function), 684
timer_get_counter_value (C++ function), 684
TIMER_GROUP_0 (C++ enumerator), 690
TIMER_GROUP_1 (C++ enumerator), 690
timer_group_clr_intr_sta_in_isr (C++ function), 689
timer_group_clr_intr_status_in_isr (C++ function), 688
timer_group_enable_alarm_in_isr (C++ function), 688
timer_group_get_auto_reload_in_isr (C++ function), 689
timer_group_get_counter_value_in_isr (C++ function), 688
timer_group_get_intr_status_in_isr (C++ function), 688
timer_group_intr_clr_in_isr (C++ function), 688
timer_group_intr_disable (C++ function), 687
timer_group_intr_enable (C++ function), 687
timer_group_intr_get_in_isr (C++ function), 688
TIMER_GROUP_MAX (C++ enumerator), 690
timer_group_set_alarm_value_in_isr (C++ function), 688
timer_group_set_counter_enable_in_isr (C++ function), 688
timer_group_t (C++ enum), 690
timer_idx_t (C++ enum), 690
timer_init (C++ function), 686
TIMER_INTR_LEVEL (C++ enumerator), 691
TIMER_INTR_MAX (C++ enumerator), 691
timer_intr_mode_t (C++ enum), 691
TIMER_INTR_NONE (C++ enumerator), 691
timer_intr_t (C++ enum), 691
TIMER_INTR_T0 (C++ enumerator), 691
TIMER_INTR_T1 (C++ enumerator), 691
TIMER_INTR_WDT (C++ enumerator), 691
timer_isr_callback_add (C++ function), 685
timer_isr_callback_remove (C++ function), 686
timer_isr_handle_t (C++ type), 689
timer_isr_register (C++ function), 686
timer_isr_t (C++ type), 689
TIMER_MAX (C++ enumerator), 690
TIMER_PAUSE (C++ enumerator), 691
timer_pause (C++ function), 684
timer_set_alarm (C++ function), 685
timer_set_alarm_value (C++ function), 685
timer_set_auto_reload (C++ function), 685
timer_set_counter_mode (C++ function), 684
timer_set_counter_value (C++ function), 684
timer_set_divider (C++ function), 685
timer_spinlock_give (C++ function), 689
timer_spinlock_take (C++ function), 689
TIMER_START (C++ enumerator), 691
timer_start (C++ function), 684
timer_start_t (C++ enum), 690
TimerCallbackFunction_t (C++ type), 1240
TimerHandle_t (C++ type), 1240
tls_keep_alive_cfg (C++ class), 907
tls_keep_alive_cfg::keep_alive_count (C++ member), 907
tls_keep_alive_cfg::keep_alive_enable (C++ member), 907
tls_keep_alive_cfg::keep_alive_idle (C++ member), 907
tls_keep_alive_cfg::keep_alive_interval (C++ member), 907
tls_keep_alive_cfg_t (C++ type), 911
TlsDeleteCallbackFunction_t (C++ type), 1193
tmrCOMMAND_CHANGE_PERIOD (C 宏), 1232
tmrCOMMAND_CHANGE_PERIOD_FROM_ISR (C 宏), 1232
tmrCOMMAND_DELETE (C 宏), 1232
tmrCOMMAND_EXECUTE_CALLBACK (C 宏), 1231
tmrCOMMAND_EXECUTE_CALLBACK_FROM_ISR (C 宏), 1231
tmrCOMMAND_RESET (C 宏), 1232
tmrCOMMAND_RESET_FROM_ISR (C 宏), 1232
tmrCOMMAND_START (C 宏), 1231
tmrCOMMAND_START_DONT_TRACE (C 宏), 1231
tmrCOMMAND_START_FROM_ISR (C 宏), 1232
tmrCOMMAND_STOP (C 宏), 1232
tmrCOMMAND_STOP_FROM_ISR (C 宏), 1232
tmrFIRST_FROM_ISR_COMMAND (C 宏), 1232
touch_cnt_slope_t (C++ enum), 853
TOUCH_FSM_MODE_DEFAULT (C 宏), 851
TOUCH_FSM_MODE_MAX (C++ enumerator), 853
TOUCH_FSM_MODE_SW (C++ enumerator), 853
touch_fsm_mode_t (C++ enum), 853
TOUCH_FSM_MODE_TIMER (C++ enumerator), 853
touch_high_volt_t (C++ enum), 852
TOUCH_HVOLT_2V4 (C++ enumerator), 852
TOUCH_HVOLT_2V5 (C++ enumerator), 852
TOUCH_HVOLT_2V6 (C++ enumerator), 852
TOUCH_HVOLT_2V7 (C++ enumerator), 852
TOUCH_HVOLT_ATTEN_0V (C++ enumerator), 852
TOUCH_HVOLT_ATTEN_0V5 (C++ enumerator), 852
TOUCH_HVOLT_ATTEN_1V (C++ enumerator), 852
TOUCH_HVOLT_ATTEN_1V5 (C++ enumerator), 852
TOUCH_HVOLT_ATTEN_KEEP (C++ enumerator), 852
TOUCH_HVOLT_ATTEN_MAX (C++ enumerator), 853
TOUCH_HVOLT_KEEP (C++ enumerator), 852
TOUCH_HVOLT_MAX (C++ enumerator), 852
touch_low_volt_t (C++ enum), 852
TOUCH_LVOLT_0V5 (C++ enumerator), 852
TOUCH_LVOLT_0V6 (C++ enumerator), 852

TOUCH_LVOLT_0V7 (C++ enumerator), 852
TOUCH_LVOLT_0V8 (C++ enumerator), 852
TOUCH_LVOLT_KEEP (C++ enumerator), 852
TOUCH_LVOLT_MAX (C++ enumerator), 852
TOUCH_PAD_ATTEN_VOLTAGE_THRESHOLD (C 宏), 851
TOUCH_PAD_BIT_MASK_ALL (C 宏), 851
TOUCH_PAD_BIT_MASK_MAX (C 宏), 851
touch_pad_clear_group_mask (C++ function), 846
touch_pad_clear_status (C++ function), 849
touch_pad_config (C++ function), 843
touch_pad_deinit (C++ function), 848
touch_pad_filter_delete (C++ function), 847
touch_pad_filter_start (C++ function), 847
touch_pad_filter_stop (C++ function), 847
touch_pad_get_cnt_mode (C++ function), 849
touch_pad_get_filter_period (C++ function), 847
touch_pad_get_fsm_mode (C++ function), 849
touch_pad_get_group_mask (C++ function), 846
touch_pad_get_meas_time (C++ function), 845
touch_pad_get_status (C++ function), 850
touch_pad_get_thresh (C++ function), 845
touch_pad_get_trigger_mode (C++ function), 845
touch_pad_get_trigger_source (C++ function), 846
touch_pad_get_voltage (C++ function), 848
touch_pad_get_wakeup_status (C++ function), 849
TOUCH_PAD_GPIO0_CHANNEL (C 宏), 850
TOUCH_PAD_GPIO12_CHANNEL (C 宏), 850
TOUCH_PAD_GPIO13_CHANNEL (C 宏), 850
TOUCH_PAD_GPIO14_CHANNEL (C 宏), 850
TOUCH_PAD_GPIO15_CHANNEL (C 宏), 850
TOUCH_PAD_GPIO27_CHANNEL (C 宏), 850
TOUCH_PAD_GPIO2_CHANNEL (C 宏), 850
TOUCH_PAD_GPIO32_CHANNEL (C 宏), 850
TOUCH_PAD_GPIO33_CHANNEL (C 宏), 850
TOUCH_PAD_GPIO4_CHANNEL (C 宏), 850
TOUCH_PAD_HIGH_VOLTAGE_THRESHOLD (C 宏), 851
TOUCH_PAD_IDLE_CH_CONNECT_DEFAULT (C 宏), 851
touch_pad_init (C++ function), 848
touch_pad_intr_clear (C++ function), 847
touch_pad_intr_disable (C++ function), 846
touch_pad_intr_enable (C++ function), 846
touch_pad_io_init (C++ function), 848
touch_pad_isr_deregister (C++ function), 849
touch_pad_isr_register (C++ function), 844
TOUCH_PAD_LOW_VOLTAGE_THRESHOLD (C 宏), 851
TOUCH_PAD_MAX (C++ enumerator), 852
touch_pad_meas_is_done (C++ function), 850
TOUCH_PAD_MEASURE_CYCLE_DEFAULT (C 宏), 851
TOUCH_PAD_NUM0 (C++ enumerator), 851
TOUCH_PAD_NUM0_GPIO_NUM (C 宏), 850
TOUCH_PAD_NUM1 (C++ enumerator), 851
TOUCH_PAD_NUM1_GPIO_NUM (C 宏), 850
TOUCH_PAD_NUM2 (C++ enumerator), 851
TOUCH_PAD_NUM2_GPIO_NUM (C 宏), 850
TOUCH_PAD_NUM3 (C++ enumerator), 851
TOUCH_PAD_NUM3_GPIO_NUM (C 宏), 850
TOUCH_PAD_NUM4 (C++ enumerator), 851
TOUCH_PAD_NUM4_GPIO_NUM (C 宏), 850
TOUCH_PAD_NUM5 (C++ enumerator), 851
TOUCH_PAD_NUM5_GPIO_NUM (C 宏), 850
TOUCH_PAD_NUM6 (C++ enumerator), 851
TOUCH_PAD_NUM6_GPIO_NUM (C 宏), 850
TOUCH_PAD_NUM7 (C++ enumerator), 851
TOUCH_PAD_NUM7_GPIO_NUM (C 宏), 850
TOUCH_PAD_NUM8 (C++ enumerator), 852
TOUCH_PAD_NUM8_GPIO_NUM (C 宏), 850
TOUCH_PAD_NUM9 (C++ enumerator), 852
TOUCH_PAD_NUM9_GPIO_NUM (C 宏), 850
touch_pad_read (C++ function), 843
touch_pad_read_filtered (C++ function), 844
touch_pad_read_raw_data (C++ function), 844
touch_pad_set_cnt_mode (C++ function), 848
touch_pad_set_filter_period (C++ function), 847
touch_pad_set_filter_read_cb (C++ function), 844
touch_pad_set_fsm_mode (C++ function), 849
touch_pad_set_group_mask (C++ function), 846
touch_pad_set_meas_time (C++ function), 844
touch_pad_set_thresh (C++ function), 845
touch_pad_set_trigger_mode (C++ function), 845
touch_pad_set_trigger_source (C++ function), 845
touch_pad_set_voltage (C++ function), 848
TOUCH_PAD_SLEEP_CYCLE_DEFAULT (C 宏), 851
TOUCH_PAD_SLOPE_0 (C++ enumerator), 853
TOUCH_PAD_SLOPE_1 (C++ enumerator), 853
TOUCH_PAD_SLOPE_2 (C++ enumerator), 853
TOUCH_PAD_SLOPE_3 (C++ enumerator), 853
TOUCH_PAD_SLOPE_4 (C++ enumerator), 853
TOUCH_PAD_SLOPE_5 (C++ enumerator), 853
TOUCH_PAD_SLOPE_6 (C++ enumerator), 853
TOUCH_PAD_SLOPE_7 (C++ enumerator), 853
TOUCH_PAD_SLOPE_DEFAULT (C 宏), 851
TOUCH_PAD_SLOPE_MAX (C++ enumerator), 853
touch_pad_sw_start (C++ function), 845
touch_pad_t (C++ enum), 851
TOUCH_PAD_THRESHOLD_MAX (C 宏), 851
TOUCH_PAD_TIE_OPT_DEFAULT (C 宏), 851
TOUCH_PAD_TIE_OPT_HIGH (C++ enumerator), 853
TOUCH_PAD_TIE_OPT_LOW (C++ enumerator), 853

TOUCH_PAD_TIE_OPT_MAX (C++ enumerator), 853
touch_tie_opt_t (C++ enum), 853
TOUCH_TRIGGER_ABOVE (C++ enumerator), 853
TOUCH_TRIGGER_BELOW (C++ enumerator), 853
TOUCH_TRIGGER_MAX (C++ enumerator), 853
TOUCH_TRIGGER_MODE_DEFAULT (C 宏), 851
touch_trigger_mode_t (C++ enum), 853
TOUCH_TRIGGER_SOURCE_BOTH (C++ enumerator), 854
TOUCH_TRIGGER_SOURCE_DEFAULT (C 宏), 851
TOUCH_TRIGGER_SOURCE_MAX (C++ enumerator), 854
TOUCH_TRIGGER_SOURCE_SET1 (C++ enumerator), 854
touch_trigger_src_t (C++ enum), 854
touch_volt_atten_t (C++ enum), 852
transaction_cb_t (C++ type), 833
tskIDLE_PRIORITY (C 宏), 1192
tskKERNEL_VERSION_BUILD (C 宏), 1191
tskKERNEL_VERSION_MAJOR (C 宏), 1191
tskKERNEL_VERSION_MINOR (C 宏), 1191
tskKERNEL_VERSION_NUMBER (C 宏), 1191
tskMPU_REGION_DEVICE_MEMORY (C 宏), 1192
tskMPU_REGION_EXECUTE_NEVER (C 宏), 1192
tskMPU_REGION_NORMAL_MEMORY (C 宏), 1192
tskMPU_REGION_READ_ONLY (C 宏), 1192
tskMPU_REGION_READ_WRITE (C 宏), 1192
tskNO_AFFINITY (C 宏), 1192
twai_clear_receive_queue (C++ function), 867
twai_clear_transmit_queue (C++ function), 867
twai_driver_install (C++ function), 865
twai_driver_uninstall (C++ function), 865
TWAI_ERR_PASS_THRESH (C 宏), 864
TWAI_EXTD_ID_MASK (C 宏), 864
twai_filter_config_t (C++ class), 864
twai_filter_config_t::acceptance_code (C++ member), 864
twai_filter_config_t::acceptance_mask (C++ member), 864
twai_filter_config_t::single_filter (C++ member), 864
TWAI_FRAME_EXTD_ID_LEN_BYTES (C 宏), 864
TWAI_FRAME_MAX_DLC (C 宏), 864
TWAI_FRAME_STD_ID_LEN_BYTES (C 宏), 864
twai_general_config_t (C++ class), 867
twai_general_config_t::alerts_enabled (C++ member), 868
twai_general_config_t::bus_off_io (C++ member), 868
twai_general_config_t::clkout_divider (C++ member), 868
twai_general_config_t::clkout_io (C++ member), 868
twai_general_config_t::intr_flags (C++ member), 868
twai_general_config_t::mode (C++ member), 868
twai_general_config_t::rx_io (C++ member), 868
twai_general_config_t::rx_queue_len (C++ member), 868
twai_general_config_t::tx_io (C++ member), 868
twai_general_config_t::tx_queue_len (C++ member), 868
twai_get_status_info (C++ function), 867
twai_initiate_recovery (C++ function), 867
TWAI_IO_UNUSED (C 宏), 869
twai_message_t (C++ class), 863
twai_message_t::data (C++ member), 863
twai_message_t::data_length_code (C++ member), 863
twai_message_t::dlc_non_comp (C++ member), 863
twai_message_t::extd (C++ member), 863
twai_message_t::flags (C++ member), 863
twai_message_t::identifier (C++ member), 863
twai_message_t::reserved (C++ member), 863
twai_message_t::rtr (C++ member), 863
twai_message_t::self (C++ member), 863
twai_message_t::ss (C++ member), 863
TWAI_MODE_LISTEN_ONLY (C++ enumerator), 865
TWAI_MODE_NO_ACK (C++ enumerator), 864
TWAI_MODE_NORMAL (C++ enumerator), 864
twai_mode_t (C++ enum), 864
twai_read_alerts (C++ function), 866
twai_receive (C++ function), 866
twai_reconfigure_alerts (C++ function), 867
twai_start (C++ function), 865
TWAI_STATE_BUS_OFF (C++ enumerator), 869
TWAI_STATE_RECOVERING (C++ enumerator), 869
TWAI_STATE_RUNNING (C++ enumerator), 869
TWAI_STATE_STOPPED (C++ enumerator), 869
twai_state_t (C++ enum), 869
twai_status_info_t (C++ class), 868
twai_status_info_t::arb_lost_count (C++ member), 868
twai_status_info_t::bus_error_count (C++ member), 868
twai_status_info_t::msgs_to_rx (C++ member), 868
twai_status_info_t::msgs_to_tx (C++ member), 868
twai_status_info_t::rx_error_counter (C++ member), 868
twai_status_info_t::rx_missed_count (C++ member), 868
twai_status_info_t::rx_overrun_count (C++ member), 868
twai_status_info_t::state (C++ member), 868

twai_status_info_t::tx_error_counter (C++ member), 868
twai_status_info_t::tx_failed_count (C++ member), 868
TWAI_STD_ID_MASK (C 宏), 864
twai_stop (C++ function), 865
twai_timing_config_t (C++ class), 863
twai_timing_config_t::brp (C++ member), 864
twai_timing_config_t::sjw (C++ member), 864
twai_timing_config_t::triple_sampling (C++ member), 864
twai_timing_config_t::tseg_1 (C++ member), 864
twai_timing_config_t::tseg_2 (C++ member), 864
twai_transmit (C++ function), 866

U

uart_at_cmd_t (C++ class), 887
uart_at_cmd_t::char_num (C++ member), 887
uart_at_cmd_t::cmd_char (C++ member), 887
uart_at_cmd_t::gap_tout (C++ member), 887
uart_at_cmd_t::post_idle (C++ member), 888
uart_at_cmd_t::pre_idle (C++ member), 887
UART_BITRATE_MAX (C 宏), 887
UART_BREAK (C++ enumerator), 887
UART_BUFFER_FULL (C++ enumerator), 887
uart_clear_intr_status (C++ function), 878
uart_config_t (C++ class), 888
uart_config_t::baud_rate (C++ member), 888
uart_config_t::data_bits (C++ member), 888
uart_config_t::flow_ctrl (C++ member), 888
uart_config_t::parity (C++ member), 888
uart_config_t::rx_flow_ctrl_thresh (C++ member), 888
uart_config_t::source_clk (C++ member), 888
uart_config_t::stop_bits (C++ member), 888
uart_config_t::use_ref_tick (C++ member), 888
UART_CTS_GPIO19_DIRECT_CHANNEL (C 宏), 891
UART_CTS_GPIO6_DIRECT_CHANNEL (C 宏), 891
UART_CTS_GPIO8_DIRECT_CHANNEL (C 宏), 892
UART_DATA (C++ enumerator), 887
UART_DATA_5_BITS (C++ enumerator), 889
UART_DATA_6_BITS (C++ enumerator), 889
UART_DATA_7_BITS (C++ enumerator), 889
UART_DATA_8_BITS (C++ enumerator), 889
UART_DATA_BITS_MAX (C++ enumerator), 889
UART_DATA_BREAK (C++ enumerator), 887
uart_disable_intr_mask (C++ function), 878
uart_disable_pattern_det_intr (C++ function), 882
uart_disable_rx_intr (C++ function), 878
uart_disable_tx_intr (C++ function), 878
uart_driver_delete (C++ function), 875
uart_driver_install (C++ function), 875
uart_enable_intr_mask (C++ function), 878
uart_enable_pattern_det_baud_intr (C++ function), 882
uart_enable_pattern_det_intr (C++ function), 882
uart_enable_rx_intr (C++ function), 878
uart_enable_tx_intr (C++ function), 879
UART_EVENT_MAX (C++ enumerator), 887
uart_event_t (C++ class), 886
uart_event_t::size (C++ member), 886
uart_event_t::timeout_flag (C++ member), 886
uart_event_t::type (C++ member), 886
uart_event_type_t (C++ enum), 887
UART_FIFO_LEN (C 宏), 886
UART_FIFO_OVF (C++ enumerator), 887
uart_flush (C++ function), 881
uart_flush_input (C++ function), 882
UART_FRAME_ERR (C++ enumerator), 887
uart_get_baudrate (C++ function), 877
uart_get_buffered_data_len (C++ function), 882
uart_get_collision_flag (C++ function), 884
uart_get_hw_flow_ctrl (C++ function), 878
uart_get_parity (C++ function), 876
uart_get_stop_bits (C++ function), 876
uart_get_wakeup_threshold (C++ function), 885
uart_get_word_length (C++ function), 876
UART_GPIO10_DIRECT_CHANNEL (C 宏), 891
UART_GPIO11_DIRECT_CHANNEL (C 宏), 891
UART_GPIO16_DIRECT_CHANNEL (C 宏), 891
UART_GPIO17_DIRECT_CHANNEL (C 宏), 891
UART_GPIO19_DIRECT_CHANNEL (C 宏), 891
UART_GPIO1_DIRECT_CHANNEL (C 宏), 891
UART_GPIO22_DIRECT_CHANNEL (C 宏), 891
UART_GPIO3_DIRECT_CHANNEL (C 宏), 891
UART_GPIO6_DIRECT_CHANNEL (C 宏), 891
UART_GPIO7_DIRECT_CHANNEL (C 宏), 891
UART_GPIO8_DIRECT_CHANNEL (C 宏), 891
UART_GPIO9_DIRECT_CHANNEL (C 宏), 891
uart_hw_flowcontrol_t (C++ enum), 889
UART_HW_FLOWCTRL_CTS (C++ enumerator), 890
UART_HW_FLOWCTRL_CTS_RTS (C++ enumerator), 890
UART_HW_FLOWCTRL_DISABLE (C++ enumerator), 889
UART_HW_FLOWCTRL_MAX (C++ enumerator), 890
UART_HW_FLOWCTRL_RTS (C++ enumerator), 889
uart_intr_config (C++ function), 880
uart_intr_config_t (C++ class), 886

uart_intr_config_t::intr_enable_mask (C++ member), 886
uart_intr_config_t::rx_timeout_thresh (C++ member), 886
uart_intr_config_t::rxfifo_full_thresh (C++ member), 886
uart_intr_config_t::txfifo_empty_intr_thresh (C++ member), 886
uart_is_driver_installed (C++ function), 876
uart_isr_free (C++ function), 879
uart_isr_handle_t (C++ type), 887
uart_isr_register (C++ function), 879
UART_MODE_IRDA (C++ enumerator), 889
UART_MODE_RS485_APP_CTRL (C++ enumerator), 889
UART_MODE_RS485_COLLISION_DETECT (C++ enumerator), 889
UART_MODE_RS485_HALF_DUPLEX (C++ enumerator), 889
uart_mode_t (C++ enum), 888
UART_MODE_UART (C++ enumerator), 888
UART_NUM_0 (C 宏), 886
UART_NUM_0_CTS_DIRECT_GPIO_NUM (C 宏), 891
UART_NUM_0_RTS_DIRECT_GPIO_NUM (C 宏), 891
UART_NUM_0_RXD_DIRECT_GPIO_NUM (C 宏), 891
UART_NUM_0_TXD_DIRECT_GPIO_NUM (C 宏), 891
UART_NUM_1 (C 宏), 886
UART_NUM_1_CTS_DIRECT_GPIO_NUM (C 宏), 891
UART_NUM_1_RTS_DIRECT_GPIO_NUM (C 宏), 891
UART_NUM_1_RXD_DIRECT_GPIO_NUM (C 宏), 891
UART_NUM_1_TXD_DIRECT_GPIO_NUM (C 宏), 891
UART_NUM_2 (C 宏), 886
UART_NUM_2_CTS_DIRECT_GPIO_NUM (C 宏), 891
UART_NUM_2_RTS_DIRECT_GPIO_NUM (C 宏), 892
UART_NUM_2_RXD_DIRECT_GPIO_NUM (C 宏), 891
UART_NUM_2_TXD_DIRECT_GPIO_NUM (C 宏), 891
UART_NUM_MAX (C 宏), 886
uart_param_config (C++ function), 880
UART_PARITY_DISABLE (C++ enumerator), 889
UART_PARITY_ERR (C++ enumerator), 887
UART_PARITY_EVEN (C++ enumerator), 889
UART_PARITY_ODD (C++ enumerator), 889
uart_parity_t (C++ enum), 889
UART_PATTERN_DET (C++ enumerator), 887
uart_pattern_get_pos (C++ function), 883
uart_pattern_pop_pos (C++ function), 883
uart_pattern_queue_reset (C++ function), 883
UART_PIN_NO_CHANGE (C 宏), 886
uart_port_t (C++ type), 888
uart_read_bytes (C++ function), 881
UART_RTS_GPIO11_DIRECT_CHANNEL (C 宏), 891
UART_RTS_GPIO22_DIRECT_CHANNEL (C 宏), 891
UART_RTS_GPIO7_DIRECT_CHANNEL (C 宏), 892
UART_RXD_GPIO16_DIRECT_CHANNEL (C 宏), 892
UART_RXD_GPIO3_DIRECT_CHANNEL (C 宏), 891
UART_RXD_GPIO9_DIRECT_CHANNEL (C 宏), 891
UART_SCLK_APB (C++ enumerator), 890
UART_SCLK_REF_TICK (C++ enumerator), 890
uart_sclk_t (C++ enum), 890
uart_set_always_rx_timeout (C++ function), 885
uart_set_baudrate (C++ function), 877
uart_set_dtr (C++ function), 880
uart_set_hw_flow_ctrl (C++ function), 877
uart_set_line_inverse (C++ function), 877
uart_set_loop_back (C++ function), 885
uart_set_mode (C++ function), 884
uart_set_parity (C++ function), 876
uart_set_pin (C++ function), 879
uart_set_rts (C++ function), 879
uart_set_rx_full_threshold (C++ function), 884
uart_set_rx_timeout (C++ function), 884
uart_set_stop_bits (C++ function), 876
uart_set_sw_flow_ctrl (C++ function), 877
uart_set_tx_empty_threshold (C++ function), 884
uart_set_tx_idle_num (C++ function), 880
uart_set_wakeup_threshold (C++ function), 884
uart_set_word_length (C++ function), 876
UART_SIGNAL_CTS_INV (C++ enumerator), 890
UART_SIGNAL_DSR_INV (C++ enumerator), 890
UART_SIGNAL_DTR_INV (C++ enumerator), 890
UART_SIGNAL_INV_DISABLE (C++ enumerator), 890
uart_signal_inv_t (C++ enum), 890
UART_SIGNAL_IRDA_RX_INV (C++ enumerator), 890
UART_SIGNAL_IRDA_TX_INV (C++ enumerator), 890
UART_SIGNAL_RTS_INV (C++ enumerator), 890
UART_SIGNAL_RXD_INV (C++ enumerator), 890
UART_SIGNAL_TXD_INV (C++ enumerator), 890
UART_STOP_BITS_1 (C++ enumerator), 889
UART_STOP_BITS_1_5 (C++ enumerator), 889
UART_STOP_BITS_2 (C++ enumerator), 889
UART_STOP_BITS_MAX (C++ enumerator), 889
uart_stop_bits_t (C++ enum), 889

uart_sw_flowctrl_t (C++ class), 888
uart_sw_flowctrl_t::xoff_char (C++ member), 888
uart_sw_flowctrl_t::xoff_thrd (C++ member), 888
uart_sw_flowctrl_t::xon_char (C++ member), 888
uart_sw_flowctrl_t::xon_thrd (C++ member), 888
uart_tx_chars (C++ function), 880
UART_TXD_GPIO10_DIRECT_CHANNEL (C 宏), 891
UART_TXD_GPIO17_DIRECT_CHANNEL (C 宏), 892
UART_TXD_GPIO1_DIRECT_CHANNEL (C 宏), 891
uart_wait_tx_done (C++ function), 880
uart_wait_tx_idle_polling (C++ function), 885
uart_word_length_t (C++ enum), 889
uart_write_bytes (C++ function), 881
uart_write_bytes_with_break (C++ function), 881
UINT16 (C++ type), 379
UINT32 (C++ type), 379
UINT64 (C++ type), 379
UINT8 (C++ type), 379
ulp_load_binary (C++ function), 1885, 1888
ulp_process_macros_and_load (C++ function), 1879
ulp_run (C++ function), 1880, 1885, 1889
ulp_set_wakeup_period (C++ function), 1886, 1889
ulTaskGetIdleRunTimeCounter (C++ function), 1187
ulTaskNotifyTake (C++ function), 1191
uxQueueMessagesWaiting (C++ function), 1198
uxQueueMessagesWaitingFromISR (C++ function), 1200
uxQueueSpacesAvailable (C++ function), 1198
uxSemaphoreGetCount (C 宏), 1224
uxTaskGetNumberOfTasks (C++ function), 1182
uxTaskGetStackHighWaterMark (C++ function), 1182
uxTaskGetStackHighWaterMark2 (C++ function), 1182
uxTaskGetSystemState (C++ function), 1184
uxTaskPriorityGet (C++ function), 1177
uxTaskPriorityGetFromISR (C++ function), 1177

V

vendor_ie_data_t (C++ class), 567
vendor_ie_data_t::element_id (C++ member), 568
vendor_ie_data_t::length (C++ member), 568
vendor_ie_data_t::payload (C++ member), 568
vendor_ie_data_t::vendor_oui (C++ member), 568
vendor_ie_data_t::vendor_oui_type (C++ member), 568
vEventGroupDelete (C++ function), 1247
vMessageBufferDelete (C 宏), 1262
vprintf_like_t (C++ type), 1322
vQueueAddToRegistry (C++ function), 1200
vQueueDelete (C++ function), 1198
vQueueUnregisterQueue (C++ function), 1200
vRingbufferDelete (C++ function), 1276
vRingbufferGetInfo (C++ function), 1277
vRingbufferReturnItem (C++ function), 1276
vRingbufferReturnItemFromISR (C++ function), 1276
vSemaphoreDelete (C 宏), 1224
vStreamBufferDelete (C++ function), 1253
vTaskAllocateMPURegions (C++ function), 1175
vTaskDelay (C++ function), 1175
vTaskDelayUntil (C++ function), 1176
vTaskDelete (C++ function), 1175
vTaskGetInfo (C++ function), 1177
vTaskGetRunTimeStats (C++ function), 1186
vTaskList (C++ function), 1186
vTaskNotifyGiveFromISR (C++ function), 1190
vTaskPrioritySet (C++ function), 1178
vTaskResume (C++ function), 1179
vTaskSetApplicationTaskTag (C++ function), 1183
vTaskSetThreadLocalStoragePointer (C++ function), 1183
vTaskSetThreadLocalStoragePointerAndDelCallback (C++ function), 1184
vTaskSuspend (C++ function), 1179
vTaskSuspendAll (C++ function), 1180
vTimerSetReloadMode (C++ function), 1231
vTimerSetTimerID (C++ function), 1228

W

WEBSOCKET_EVENT_ANY (C++ enumerator), 932
WEBSOCKET_EVENT_CLOSED (C++ enumerator), 932
WEBSOCKET_EVENT_CONNECTED (C++ enumerator), 932
WEBSOCKET_EVENT_DATA (C++ enumerator), 932
WEBSOCKET_EVENT_DISCONNECTED (C++ enumerator), 932
WEBSOCKET_EVENT_ERROR (C++ enumerator), 932
WEBSOCKET_EVENT_MAX (C++ enumerator), 932
WEBSOCKET_TRANSPORT_OVER_SSL (C++ enumerator), 932
WEBSOCKET_TRANSPORT_OVER_TCP (C++ enumerator), 932
WEBSOCKET_TRANSPORT_UNKNOWN (C++ enumerator), 932
wifi_action_rx_cb_t (C++ type), 577
wifi_action_tx_req_t (C++ class), 571

wifi_action_tx_req_t::data (C++ member), 571
wifi_action_tx_req_t::data_len (C++ member), 571
wifi_action_tx_req_t::dest_mac (C++ member), 571
wifi_action_tx_req_t::ifx (C++ member), 571
wifi_action_tx_req_t::no_ack (C++ member), 571
wifi_action_tx_req_t::rx_cb (C++ member), 571
wifi_active_scan_time_t (C++ class), 563
wifi_active_scan_time_t::max (C++ member), 563
wifi_active_scan_time_t::min (C++ member), 563
WIFI_ALL_CHANNEL_SCAN (C++ enumerator), 580
WIFI_AMPDU_RX_ENABLED (C 宏), 561
WIFI_AMPDU_TX_ENABLED (C 宏), 561
WIFI_AMSDU_TX_ENABLED (C 宏), 562
WIFI_ANT_ANT0 (C++ enumerator), 580
WIFI_ANT_ANT1 (C++ enumerator), 580
wifi_ant_config_t (C++ class), 571
wifi_ant_config_t::enabled_ant0 (C++ member), 571
wifi_ant_config_t::enabled_ant1 (C++ member), 571
wifi_ant_config_t::rx_ant_default (C++ member), 571
wifi_ant_config_t::rx_ant_mode (C++ member), 571
wifi_ant_config_t::tx_ant_mode (C++ member), 571
wifi_ant_gpio_config_t (C++ class), 570
wifi_ant_gpio_config_t::gpio_cfg (C++ member), 571
wifi_ant_gpio_t (C++ class), 570
wifi_ant_gpio_t::gpio_num (C++ member), 570
wifi_ant_gpio_t::gpio_select (C++ member), 570
WIFI_ANT_MAX (C++ enumerator), 580
WIFI_ANT_MODE_ANT0 (C++ enumerator), 582
WIFI_ANT_MODE_ANT1 (C++ enumerator), 582
WIFI_ANT_MODE_AUTO (C++ enumerator), 582
WIFI_ANT_MODE_MAX (C++ enumerator), 582
wifi_ant_mode_t (C++ enum), 582
wifi_ant_t (C++ enum), 580
wifi_ap_config_t (C++ class), 565
wifi_ap_config_t::authmode (C++ member), 565
wifi_ap_config_t::beacon_interval (C++ member), 566
wifi_ap_config_t::channel (C++ member), 565
wifi_ap_config_t::ftm_responder (C++ member), 566
wifi_ap_config_t::max_connection (C++ member), 566
wifi_ap_config_t::pairwise_cipher (C++ member), 566
wifi_ap_config_t::password (C++ member), 565
wifi_ap_config_t::ssid (C++ member), 565
wifi_ap_config_t::ssid_hidden (C++ member), 566
wifi_ap_config_t::ssid_len (C++ member), 565
wifi_ap_record_t (C++ class), 564
wifi_ap_record_t::ant (C++ member), 564
wifi_ap_record_t::authmode (C++ member), 564
wifi_ap_record_t::bssid (C++ member), 564
wifi_ap_record_t::country (C++ member), 565
wifi_ap_record_t::ftm_initiator (C++ member), 565
wifi_ap_record_t::ftm_responder (C++ member), 565
wifi_ap_record_t::group_cipher (C++ member), 564
wifi_ap_record_t::pairwise_cipher (C++ member), 564
wifi_ap_record_t::phy_11b (C++ member), 564
wifi_ap_record_t::phy_11g (C++ member), 564
wifi_ap_record_t::phy_11n (C++ member), 564
wifi_ap_record_t::phy_lr (C++ member), 565
wifi_ap_record_t::primary (C++ member), 564
wifi_ap_record_t::reserved (C++ member), 565
wifi_ap_record_t::rssi (C++ member), 564
wifi_ap_record_t::second (C++ member), 564
wifi_ap_record_t::ssid (C++ member), 564
wifi_ap_record_t::wps (C++ member), 565
WIFI_AUTH_MAX (C++ enumerator), 578
wifi_auth_mode_t (C++ enum), 577
WIFI_AUTH_OPEN (C++ enumerator), 577
WIFI_AUTH_WAPI_PSK (C++ enumerator), 578
WIFI_AUTH_WEP (C++ enumerator), 577
WIFI_AUTH_WPA2_ENTERPRISE (C++ enumerator), 577
WIFI_AUTH_WPA2_PSK (C++ enumerator), 577
WIFI_AUTH_WPA2_WPA3_PSK (C++ enumerator), 577
WIFI_AUTH_WPA3_PSK (C++ enumerator), 577
WIFI_AUTH_WPA_PSK (C++ enumerator), 577
WIFI_AUTH_WPA_WPA2_PSK (C++ enumerator), 577
wifi_bandwidth_t (C++ enum), 580

WIFI_BW_HT20 (C++ enumerator), 581
WIFI_BW_HT40 (C++ enumerator), 581
WIFI_CACHE_TX_BUFFER_NUM (C 宏), 561
WIFI_CIPHER_TYPE_AES_CMAC128 (C++ enumerator), 580
WIFI_CIPHER_TYPE_CCMP (C++ enumerator), 580
WIFI_CIPHER_TYPE_NONE (C++ enumerator), 579
WIFI_CIPHER_TYPE_SMS4 (C++ enumerator), 580
wifi_cipher_type_t (C++ enum), 579
WIFI_CIPHER_TYPE_TKIP (C++ enumerator), 580
WIFI_CIPHER_TYPE_TKIP_CCMP (C++ enumerator), 580
WIFI_CIPHER_TYPE_UNKNOWN (C++ enumerator), 580
WIFI_CIPHER_TYPE_WEP104 (C++ enumerator), 580
WIFI_CIPHER_TYPE_WEP40 (C++ enumerator), 579
wifi_config_t (C++ union), 563
wifi_config_t::ap (C++ member), 563
wifi_config_t::sta (C++ member), 563
WIFI_CONNECT_AP_BY_SECURITY (C++ enumerator), 580
WIFI_CONNECT_AP_BY_SIGNAL (C++ enumerator), 580
WIFI_COUNTRY_POLICY_AUTO (C++ enumerator), 577
WIFI_COUNTRY_POLICY_MANUAL (C++ enumerator), 577
wifi_country_policy_t (C++ enum), 577
wifi_country_t (C++ class), 563
wifi_country_t::cc (C++ member), 563
wifi_country_t::max_tx_power (C++ member), 563
wifi_country_t::nchan (C++ member), 563
wifi_country_t::policy (C++ member), 563
wifi_country_t::schan (C++ member), 563
wifi_csi_cb_t (C++ type), 562
wifi_csi_config_t (C++ class), 569
wifi_csi_config_t::channel_filter_en (C++ member), 570
wifi_csi_config_t::htltf_en (C++ member), 570
wifi_csi_config_t::lltf_en (C++ member), 570
wifi_csi_config_t::ltf_merge_en (C++ member), 570
wifi_csi_config_t::manu_scale (C++ member), 570
wifi_csi_config_t::shift (C++ member), 570
wifi_csi_config_t::stbc_htltf2_en (C++ member), 570
WIFI_CSI_ENABLED (C 宏), 561
wifi_csi_info_t (C++ class), 570
wifi_csi_info_t::buf (C++ member), 570
wifi_csi_info_t::first_word_invalid (C++ member), 570
wifi_csi_info_t::len (C++ member), 570
wifi_csi_info_t::mac (C++ member), 570
wifi_csi_info_t::rx_ctrl (C++ member), 570
WIFI_DEFAULT_RX_BA_WIN (C 宏), 562
WIFI_DYNAMIC_TX_BUFFER_NUM (C 宏), 561
wifi_err_reason_t (C++ enum), 578
WIFI_EVENT_ACTION_TX_STATUS (C++ enumerator), 584
wifi_event_action_tx_status_t (C++ class), 575
wifi_event_action_tx_status_t::context (C++ member), 575
wifi_event_action_tx_status_t::da (C++ member), 575
wifi_event_action_tx_status_t::ifx (C++ member), 575
wifi_event_action_tx_status_t::status (C++ member), 575
wifi_event_ap_probe_req_rx_t (C++ class), 573
wifi_event_ap_probe_req_rx_t::mac (C++ member), 574
wifi_event_ap_probe_req_rx_t::rssi (C++ member), 574
WIFI_EVENT_AP_PROBEREQRECVED (C++ enumerator), 584
WIFI_EVENT_AP_STACONNECTED (C++ enumerator), 584
wifi_event_ap_staconnected_t (C++ class), 573
wifi_event_ap_staconnected_t::aid (C++ member), 573
wifi_event_ap_staconnected_t::is_mesh_child (C++ member), 573
wifi_event_ap_staconnected_t::mac (C++ member), 573
WIFI_EVENT_AP_STADISCONNECTED (C++ enumerator), 584
wifi_event_ap_stadisconnected_t (C++ class), 573
wifi_event_ap_stadisconnected_t::aid (C++ member), 573
wifi_event_ap_stadisconnected_t::is_mesh_child (C++ member), 573
wifi_event_ap_stadisconnected_t::mac (C++ member), 573
WIFI_EVENT_AP_START (C++ enumerator), 584
WIFI_EVENT_AP_STOP (C++ enumerator), 584
wifi_event_bss_rssi_low_t (C++ class), 574
wifi_event_bss_rssi_low_t::rssi (C++ member), 574
WIFI_EVENT_FTM_REPORT (C++ enumerator), 584
wifi_event_ftm_report_t (C++ class), 574
wifi_event_ftm_report_t::dist_est (C++ member), 574
wifi_event_ftm_report_t::ftm_report_data (C++ member), 575

wifi_event_ftm_report_t::ftm_report_num_entries (C++ member), 575
wifi_event_ftm_report_t::peer_mac (C++ member), 574
wifi_event_ftm_report_t::rtt_est (C++ member), 574
wifi_event_ftm_report_t::rtt_raw (C++ member), 574
wifi_event_ftm_report_t::status (C++ member), 574
WIFI_EVENT_MASK_ALL (C 宏), 576
WIFI_EVENT_MASK_AP_PROBEREQRECVED (C 宏), 576
WIFI_EVENT_MASK_NONE (C 宏), 576
WIFI_EVENT_MAX (C++ enumerator), 584
WIFI_EVENT_ROC_DONE (C++ enumerator), 584
wifi_event_roc_done_t (C++ class), 575
wifi_event_roc_done_t::context (C++ member), 575
WIFI_EVENT_SCAN_DONE (C++ enumerator), 583
WIFI_EVENT_STA_AUTHMODE_CHANGE (C++ enumerator), 584
wifi_event_sta_authmode_change_t (C++ class), 572
wifi_event_sta_authmode_change_t::new_mode (C++ member), 573
wifi_event_sta_authmode_change_t::old_mode (C++ member), 573
WIFI_EVENT_STA_BEACON_TIMEOUT (C++ enumerator), 584
WIFI_EVENT_STA_BSS_RSSI_LOW (C++ enumerator), 584
WIFI_EVENT_STA_CONNECTED (C++ enumerator), 584
wifi_event_sta_connected_t (C++ class), 572
wifi_event_sta_connected_t::authmode (C++ member), 572
wifi_event_sta_connected_t::bssid (C++ member), 572
wifi_event_sta_connected_t::channel (C++ member), 572
wifi_event_sta_connected_t::ssid (C++ member), 572
wifi_event_sta_connected_t::ssid_len (C++ member), 572
WIFI_EVENT_STA_DISCONNECTED (C++ enumerator), 584
wifi_event_sta_disconnected_t (C++ class), 572
wifi_event_sta_disconnected_t::bssid (C++ member), 572
wifi_event_sta_disconnected_t::reason (C++ member), 572
wifi_event_sta_disconnected_t::rssi (C++ member), 572
wifi_event_sta_disconnected_t::ssid (C++ member), 572
wifi_event_sta_disconnected_t::ssid_len (C++ member), 572
wifi_event_sta_scan_done_t (C++ class), 572
wifi_event_sta_scan_done_t::number (C++ member), 572
wifi_event_sta_scan_done_t::scan_id (C++ member), 572
wifi_event_sta_scan_done_t::status (C++ member), 572
WIFI_EVENT_STA_START (C++ enumerator), 583
WIFI_EVENT_STA_STOP (C++ enumerator), 583
WIFI_EVENT_STA_WPS_ER_FAILED (C++ enumerator), 584
WIFI_EVENT_STA_WPS_ER_PBC_OVERLAP (C++ enumerator), 584
WIFI_EVENT_STA_WPS_ER_PIN (C++ enumerator), 584
wifi_event_sta_wps_er_pin_t (C++ class), 573
wifi_event_sta_wps_er_pin_t::pin_code (C++ member), 573
WIFI_EVENT_STA_WPS_ER_SUCCESS (C++ enumerator), 584
wifi_event_sta_wps_er_success_t (C++ class), 573
wifi_event_sta_wps_er_success_t::ap_cred (C++ member), 573
wifi_event_sta_wps_er_success_t::ap_cred_cnt (C++ member), 573
wifi_event_sta_wps_er_success_t::passphrase (C++ member), 573
wifi_event_sta_wps_er_success_t::ssid (C++ member), 573
WIFI_EVENT_STA_WPS_ER_TIMEOUT (C++ enumerator), 584
wifi_event_sta_wps_fail_reason_t (C++ enum), 584
wifi_event_t (C++ enum), 583
WIFI_EVENT_WIFI_READY (C++ enumerator), 583
WIFI_FAST_SCAN (C++ enumerator), 580
wifi_ftm_initiator_cfg_t (C++ class), 571
wifi_ftm_initiator_cfg_t::burst_period (C++ member), 571
wifi_ftm_initiator_cfg_t::channel (C++ member), 571
wifi_ftm_initiator_cfg_t::frm_count (C++ member), 571
wifi_ftm_initiator_cfg_t::resp_mac (C++ member), 571
wifi_ftm_report_entry_t (C++ class), 574
wifi_ftm_report_entry_t::dlog_token (C++ member), 574
wifi_ftm_report_entry_t::rssi (C++ member), 574
wifi_ftm_report_entry_t::rtt (C++ member), 574
wifi_ftm_report_entry_t::t1 (C++ mem-

ber), 574
wifi_ftm_report_entry_t::t2 (*C++ member*), 574
wifi_ftm_report_entry_t::t3 (*C++ member*), 574
wifi_ftm_report_entry_t::t4 (*C++ member*), 574
wifi_ftm_status_t (*C++ enum*), 585
WIFI_IF_AP (*C++ enumerator*), 577
WIFI_IF_STA (*C++ enumerator*), 577
WIFI_INIT_CONFIG_DEFAULT (*C 宏*), 562
WIFI_INIT_CONFIG_MAGIC (*C 宏*), 562
wifi_init_config_t (*C++ class*), 559
wifi_init_config_t::ampdu_rx_enable (*C++ member*), 560
wifi_init_config_t::ampdu_tx_enable (*C++ member*), 560
wifi_init_config_t::amsdu_tx_enable (*C++ member*), 560
wifi_init_config_t::beacon_max_len (*C++ member*), 560
wifi_init_config_t::cache_tx_buf_num (*C++ member*), 560
wifi_init_config_t::csi_enable (*C++ member*), 560
wifi_init_config_t::dynamic_rx_buf_num (*C++ member*), 560
wifi_init_config_t::dynamic_tx_buf_num (*C++ member*), 560
wifi_init_config_t::event_handler (*C++ member*), 559
wifi_init_config_t::feature_caps (*C++ member*), 560
wifi_init_config_t::magic (*C++ member*), 560
wifi_init_config_t::mgmt_sbuf_num (*C++ member*), 560
wifi_init_config_t::nano_enable (*C++ member*), 560
wifi_init_config_t::nvs_enable (*C++ member*), 560
wifi_init_config_t::osi_funcs (*C++ member*), 559
wifi_init_config_t::rx_ba_win (*C++ member*), 560
wifi_init_config_t::sta_disconnected_pm (*C++ member*), 560
wifi_init_config_t::static_rx_buf_num (*C++ member*), 560
wifi_init_config_t::static_tx_buf_num (*C++ member*), 560
wifi_init_config_t::tx_buf_type (*C++ member*), 560
wifi_init_config_t::wifi_task_core_id (*C++ member*), 560
wifi_init_config_t::wpa_crypto_funcs (*C++ member*), 560
wifi_interface_t (*C++ enum*), 577
WIFI_MGMT_SBUF_NUM (*C 宏*), 562
WIFI_MODE_AP (*C++ enumerator*), 577
WIFI_MODE_APSTA (*C++ enumerator*), 577
WIFI_MODE_MAX (*C++ enumerator*), 577
WIFI_MODE_NULL (*C++ enumerator*), 577
WIFI_MODE_STA (*C++ enumerator*), 577
wifi_mode_t (*C++ enum*), 577
WIFI_NANO_FORMAT_ENABLED (*C 宏*), 562
WIFI_NVS_ENABLED (*C 宏*), 562
WIFI_OFFCHAN_TX_CANCEL (*C 宏*), 575
WIFI_OFFCHAN_TX_REQ (*C 宏*), 575
WIFI_PHY_RATE_11M_L (*C++ enumerator*), 582
WIFI_PHY_RATE_11M_S (*C++ enumerator*), 582
WIFI_PHY_RATE_12M (*C++ enumerator*), 582
WIFI_PHY_RATE_18M (*C++ enumerator*), 582
WIFI_PHY_RATE_1M_L (*C++ enumerator*), 582
WIFI_PHY_RATE_24M (*C++ enumerator*), 582
WIFI_PHY_RATE_2M_L (*C++ enumerator*), 582
WIFI_PHY_RATE_2M_S (*C++ enumerator*), 582
WIFI_PHY_RATE_36M (*C++ enumerator*), 582
WIFI_PHY_RATE_48M (*C++ enumerator*), 582
WIFI_PHY_RATE_54M (*C++ enumerator*), 582
WIFI_PHY_RATE_5M_L (*C++ enumerator*), 582
WIFI_PHY_RATE_5M_S (*C++ enumerator*), 582
WIFI_PHY_RATE_6M (*C++ enumerator*), 582
WIFI_PHY_RATE_9M (*C++ enumerator*), 582
WIFI_PHY_RATE_LORA_250K (*C++ enumerator*), 583
WIFI_PHY_RATE_LORA_500K (*C++ enumerator*), 583
WIFI_PHY_RATE_MAX (*C++ enumerator*), 583
WIFI_PHY_RATE_MCS0_LGI (*C++ enumerator*), 582
WIFI_PHY_RATE_MCS0_SGI (*C++ enumerator*), 583
WIFI_PHY_RATE_MCS1_LGI (*C++ enumerator*), 583
WIFI_PHY_RATE_MCS1_SGI (*C++ enumerator*), 583
WIFI_PHY_RATE_MCS2_LGI (*C++ enumerator*), 583
WIFI_PHY_RATE_MCS2_SGI (*C++ enumerator*), 583
WIFI_PHY_RATE_MCS3_LGI (*C++ enumerator*), 583
WIFI_PHY_RATE_MCS3_SGI (*C++ enumerator*), 583
WIFI_PHY_RATE_MCS4_LGI (*C++ enumerator*), 583
WIFI_PHY_RATE_MCS4_SGI (*C++ enumerator*), 583
WIFI_PHY_RATE_MCS5_LGI (*C++ enumerator*), 583
WIFI_PHY_RATE_MCS5_SGI (*C++ enumerator*), 583
WIFI_PHY_RATE_MCS6_LGI (*C++ enumerator*), 583
WIFI_PHY_RATE_MCS6_SGI (*C++ enumerator*),

583
WIFI_PHY_RATE_MCS7_LGI (C++ enumerator), 583
WIFI_PHY_RATE_MCS7_SGI (C++ enumerator), 583
wifi_phy_rate_t (C++ enum), 582
WIFI_PKT_CTRL (C++ enumerator), 581
WIFI_PKT_DATA (C++ enumerator), 581
WIFI_PKT_MGMT (C++ enumerator), 581
WIFI_PKT_MISC (C++ enumerator), 581
wifi_pkt_rx_ctrl_t (C++ class), 568
wifi_pkt_rx_ctrl_t::__pad0__ (C++ member), 568
wifi_pkt_rx_ctrl_t::__pad1__ (C++ member), 568
wifi_pkt_rx_ctrl_t::__pad2__ (C++ member), 568
wifi_pkt_rx_ctrl_t::__pad3__ (C++ member), 568
wifi_pkt_rx_ctrl_t::__pad4__ (C++ member), 569
wifi_pkt_rx_ctrl_t::__pad5__ (C++ member), 569
wifi_pkt_rx_ctrl_t::__pad6__ (C++ member), 569
wifi_pkt_rx_ctrl_t::__pad7__ (C++ member), 569
wifi_pkt_rx_ctrl_t::aggregation (C++ member), 568
wifi_pkt_rx_ctrl_t::ampdu_cnt (C++ member), 569
wifi_pkt_rx_ctrl_t::ant (C++ member), 569
wifi_pkt_rx_ctrl_t::channel (C++ member), 569
wifi_pkt_rx_ctrl_t::cwb (C++ member), 568
wifi_pkt_rx_ctrl_t::fec_coding (C++ member), 568
wifi_pkt_rx_ctrl_t::mcs (C++ member), 568
wifi_pkt_rx_ctrl_t::noise_floor (C++ member), 569
wifi_pkt_rx_ctrl_t::not_sounding (C++ member), 568
wifi_pkt_rx_ctrl_t::rate (C++ member), 568
wifi_pkt_rx_ctrl_t::rssi (C++ member), 568
wifi_pkt_rx_ctrl_t::rx_state (C++ member), 569
wifi_pkt_rx_ctrl_t::secondary_channel (C++ member), 569
wifi_pkt_rx_ctrl_t::sgi (C++ member), 568
wifi_pkt_rx_ctrl_t::sig_len (C++ member), 569
wifi_pkt_rx_ctrl_t::sig_mode (C++ member), 568
wifi_pkt_rx_ctrl_t::smoothing (C++ member), 568
wifi_pkt_rx_ctrl_t::stbc (C++ member), 568
wifi_pkt_rx_ctrl_t::timestamp (C++ member), 569
wifi_pmf_config_t (C++ class), 565
wifi_pmf_config_t::capable (C++ member), 565
wifi_pmf_config_t::required (C++ member), 565
WIFI_PROMIS_CTRL_FILTER_MASK_ACK (C 宏), 576
WIFI_PROMIS_CTRL_FILTER_MASK_ALL (C 宏), 576
WIFI_PROMIS_CTRL_FILTER_MASK_BA (C 宏), 576
WIFI_PROMIS_CTRL_FILTER_MASK_BAR (C 宏), 576
WIFI_PROMIS_CTRL_FILTER_MASK_CFEND (C 宏), 576
WIFI_PROMIS_CTRL_FILTER_MASK_CFENDACK (C 宏), 576
WIFI_PROMIS_CTRL_FILTER_MASK_CTS (C 宏), 576
WIFI_PROMIS_CTRL_FILTER_MASK_PSPOLL (C 宏), 576
WIFI_PROMIS_CTRL_FILTER_MASK_RTS (C 宏), 576
WIFI_PROMIS_CTRL_FILTER_MASK_WRAPPER (C 宏), 576
WIFI_PROMIS_FILTER_MASK_ALL (C 宏), 575
WIFI_PROMIS_FILTER_MASK_CTRL (C 宏), 575
WIFI_PROMIS_FILTER_MASK_DATA (C 宏), 575
WIFI_PROMIS_FILTER_MASK_DATA_AMPDU (C 宏), 576
WIFI_PROMIS_FILTER_MASK_DATA_MPDU (C 宏), 576
WIFI_PROMIS_FILTER_MASK_FCSFAIL (C 宏), 576
WIFI_PROMIS_FILTER_MASK_MGMT (C 宏), 575
WIFI_PROMIS_FILTER_MASK_MISC (C 宏), 576
wifi_promiscuous_cb_t (C++ type), 562
wifi_promiscuous_filter_t (C++ class), 569
wifi_promiscuous_filter_t::filter_mask (C++ member), 569
wifi_promiscuous_pkt_t (C++ class), 569
wifi_promiscuous_pkt_t::payload (C++ member), 569
wifi_promiscuous_pkt_t::rx_ctrl (C++ member), 569
wifi_promiscuous_pkt_type_t (C++ enum), 581
WIFI_PROTOCOL_11B (C 宏), 575
WIFI_PROTOCOL_11G (C 宏), 575
WIFI_PROTOCOL_11N (C 宏), 575
WIFI_PROTOCOL_LR (C 宏), 575
wifi_prov_cb_event_t (C++ enum), 1030
wifi_prov_cb_func_t (C++ type), 1030
wifi_prov_config_data_handler (C++ function), 1032

wifi_prov_config_get_data_t (*C++ class*), 1033
wifi_prov_config_get_data_t::conn_info (*C++ member*), 1033
wifi_prov_config_get_data_t::fail_reason (*C++ member*), 1033
wifi_prov_config_get_data_t::wifi_state (*C++ member*), 1033
wifi_prov_config_handlers (*C++ class*), 1033
wifi_prov_config_handlers::apply_config_handler (*C++ member*), 1033
wifi_prov_config_handlers::ctx (*C++ member*), 1033
wifi_prov_config_handlers::get_status_handler (*C++ member*), 1033
wifi_prov_config_handlers::set_config_handler (*C++ member*), 1033
wifi_prov_config_handlers_t (*C++ type*), 1034
wifi_prov_config_set_data_t (*C++ class*), 1033
wifi_prov_config_set_data_t::bssid (*C++ member*), 1033
wifi_prov_config_set_data_t::channel (*C++ member*), 1033
wifi_prov_config_set_data_t::password (*C++ member*), 1033
wifi_prov_config_set_data_t::ssid (*C++ member*), 1033
WIFI_PROV_CRED_FAIL (*C++ enumerator*), 1030
WIFI_PROV_CRED_RECV (*C++ enumerator*), 1030
WIFI_PROV_CRED_SUCCESS (*C++ enumerator*), 1030
wifi_prov_ctx_t (*C++ type*), 1034
WIFI_PROV_DEINIT (*C++ enumerator*), 1031
WIFI_PROV_END (*C++ enumerator*), 1031
WIFI_PROV_EVENT_HANDLER_NONE (*C 宏*), 1030
wifi_prov_event_handler_t (*C++ class*), 1029
wifi_prov_event_handler_t::event_cb (*C++ member*), 1029
wifi_prov_event_handler_t::user_data (*C++ member*), 1029
WIFI_PROV_INIT (*C++ enumerator*), 1030
wifi_prov_mgr_config_t (*C++ class*), 1029
wifi_prov_mgr_config_t::app_event_handler (*C++ member*), 1030
wifi_prov_mgr_config_t::scheme (*C++ member*), 1029
wifi_prov_mgr_config_t::scheme_event_handler (*C++ member*), 1030
wifi_prov_mgr_configure_sta (*C++ function*), 1028
wifi_prov_mgr_deinit (*C++ function*), 1025
wifi_prov_mgr_disable_auto_stop (*C++ function*), 1026
wifi_prov_mgr_endpoint_create (*C++ function*), 1027
wifi_prov_mgr_endpoint_register (*C++ function*), 1027
wifi_prov_mgr_endpoint_unregister (*C++ function*), 1027
wifi_prov_mgr_event_handler (*C++ function*), 1028
wifi_prov_mgr_get_wifi_disconnect_reason (*C++ function*), 1028
wifi_prov_mgr_get_wifi_state (*C++ function*), 1028
wifi_prov_mgr_init (*C++ function*), 1024
wifi_prov_mgr_is_provisioned (*C++ function*), 1025
wifi_prov_mgr_reset_sm_state_on_failure (*C++ function*), 1028
wifi_prov_mgr_set_app_info (*C++ function*), 1026
wifi_prov_mgr_start_provisioning (*C++ function*), 1025
wifi_prov_mgr_stop_provisioning (*C++ function*), 1026
wifi_prov_mgr_wait (*C++ function*), 1026
wifi_prov_scheme (*C++ class*), 1029
wifi_prov_scheme::delete_config (*C++ member*), 1029
wifi_prov_scheme::new_config (*C++ member*), 1029
wifi_prov_scheme::prov_start (*C++ member*), 1029
wifi_prov_scheme::prov_stop (*C++ member*), 1029
wifi_prov_scheme::set_config_endpoint (*C++ member*), 1029
wifi_prov_scheme::set_config_service (*C++ member*), 1029
wifi_prov_scheme::wifi_mode (*C++ member*), 1029
wifi_prov_scheme_ble_event_cb_free_ble (*C++ function*), 1031
wifi_prov_scheme_ble_event_cb_free_bt (*C++ function*), 1031
wifi_prov_scheme_ble_event_cb_free_btdm (*C++ function*), 1031
WIFI_PROV_SCHEME_BLE_EVENT_HANDLER_FREE_BLE (*C 宏*), 1032
WIFI_PROV_SCHEME_BLE_EVENT_HANDLER_FREE_BT (*C 宏*), 1032
WIFI_PROV_SCHEME_BLE_EVENT_HANDLER_FREE_BTDM (*C 宏*), 1032
wifi_prov_scheme_ble_set_mfg_data (*C++ function*), 1031
wifi_prov_scheme_ble_set_service_uuid (*C++ function*), 1031
wifi_prov_scheme_softap_set_httpd_handle (*C++ function*), 1032
wifi_prov_scheme_t (*C++ type*), 1030
wifi_prov_security (*C++ enum*), 1031

WIFI_PROV_SECURITY_0 (C++ enumerator), 1031
WIFI_PROV_SECURITY_1 (C++ enumerator), 1031
wifi_prov_security_t (C++ type), 1030
WIFI_PROV_STA_AP_NOT_FOUND (C++ enumerator), 1034
WIFI_PROV_STA_AUTH_ERROR (C++ enumerator), 1034
wifi_prov_sta_conn_info_t (C++ class), 1032
wifi_prov_sta_conn_info_t::auth_mode (C++ member), 1033
wifi_prov_sta_conn_info_t::bssid (C++ member), 1032
wifi_prov_sta_conn_info_t::channel (C++ member), 1033
wifi_prov_sta_conn_info_t::ip_addr (C++ member), 1032
wifi_prov_sta_conn_info_t::ssid (C++ member), 1033
WIFI_PROV_STA_CONNECTED (C++ enumerator), 1034
WIFI_PROV_STA_CONNECTING (C++ enumerator), 1034
WIFI_PROV_STA_DISCONNECTED (C++ enumerator), 1034
wifi_prov_sta_fail_reason_t (C++ enum), 1034
wifi_prov_sta_state_t (C++ enum), 1034
WIFI_PROV_START (C++ enumerator), 1030
WIFI_PS_MAX_MODEM (C++ enumerator), 580
WIFI_PS_MIN_MODEM (C++ enumerator), 580
WIFI_PS_NONE (C++ enumerator), 580
wifi_ps_type_t (C++ enum), 580
WIFI_REASON_4WAY_HANDSHAKE_TIMEOUT (C++ enumerator), 578
WIFI_REASON_802_1X_AUTH_FAILED (C++ enumerator), 578
WIFI_REASON_AKMP_INVALID (C++ enumerator), 578
WIFI_REASON_ALTERATIVE_CHANNEL_OCCUPIED (C++ enumerator), 579
WIFI_REASON_AP_INITIATED (C++ enumerator), 579
WIFI_REASON_AP_TSF_RESET (C++ enumerator), 579
WIFI_REASON_ASSOC_COMEBACK_TIME_TOO_LONG (C++ enumerator), 579
WIFI_REASON_ASSOC_EXPIRE (C++ enumerator), 578
WIFI_REASON_ASSOC_FAIL (C++ enumerator), 579
WIFI_REASON_ASSOC_LEAVE (C++ enumerator), 578
WIFI_REASON_ASSOC_NOT_AUTHED (C++ enumerator), 578
WIFI_REASON_ASSOC_TOOMANY (C++ enumerator), 578
WIFI_REASON_AUTH_EXPIRE (C++ enumerator), 578
WIFI_REASON_AUTH_FAIL (C++ enumerator), 579
WIFI_REASON_AUTH_LEAVE (C++ enumerator), 578
WIFI_REASON_BAD_CIPHER_OR_AKM (C++ enumerator), 578
WIFI_REASON_BEACON_TIMEOUT (C++ enumerator), 579
WIFI_REASON_BSS_TRANSITION_DISASSOC (C++ enumerator), 578
WIFI_REASON_CIPHER_SUITE_REJECTED (C++ enumerator), 578
WIFI_REASON_CONNECTION_FAIL (C++ enumerator), 579
WIFI_REASON_DISASSOC_PWRCAP_BAD (C++ enumerator), 578
WIFI_REASON_DISASSOC_SUPCHAN_BAD (C++ enumerator), 578
WIFI_REASON_END_BA (C++ enumerator), 579
WIFI_REASON_EXCEEDED_TXOP (C++ enumerator), 579
WIFI_REASON_GROUP_CIPHER_INVALID (C++ enumerator), 578
WIFI_REASON_GROUP_KEY_UPDATE_TIMEOUT (C++ enumerator), 578
WIFI_REASON_HANDSHAKE_TIMEOUT (C++ enumerator), 579
WIFI_REASON_IE_IN_4WAY_DIFFERS (C++ enumerator), 578
WIFI_REASON_IE_INVALID (C++ enumerator), 578
WIFI_REASON_INVALID_FT_ACTION_FRAME_COUNT (C++ enumerator), 579
WIFI_REASON_INVALID_FTE (C++ enumerator), 579
WIFI_REASON_INVALID_MDE (C++ enumerator), 579
WIFI_REASON_INVALID_PMKID (C++ enumerator), 579
WIFI_REASON_INVALID_RSN_IE_CAP (C++ enumerator), 578
WIFI_REASON_MIC_FAILURE (C++ enumerator), 578
WIFI_REASON_MISSING_ACKS (C++ enumerator), 578
WIFI_REASON_NO_AP_FOUND (C++ enumerator), 579
WIFI_REASON_NO_SSP_ROAMING_AGREEMENT (C++ enumerator), 578
WIFI_REASON_NOT_ASSOCED (C++ enumerator), 578
WIFI_REASON_NOT_AUTHED (C++ enumerator), 578
WIFI_REASON_NOT_AUTHORIZED_THIS_LOCATION (C++ enumerator), 578
WIFI_REASON_NOT_ENOUGH_BANDWIDTH (C++ enumerator), 578
WIFI_REASON_PAIRWISE_CIPHER_INVALID

(C++ enumerator), 578
WIFI_REASON_PEER_INITIATED (C++ enumerator), 579
WIFI_REASON_ROAMING (C++ enumerator), 579
WIFI_REASON_SA_QUERY_TIMEOUT (C++ enumerator), 579
WIFI_REASON_SERVICE_CHANGE_PERCLUDES_TS (C++ enumerator), 578
WIFI_REASON_SSP_REQUESTED_DISASSOC (C++ enumerator), 578
WIFI_REASON_STA_LEAVING (C++ enumerator), 579
WIFI_REASON_TDLS_PEER_UNREACHABLE (C++ enumerator), 578
WIFI_REASON_TDLS_UNSPECIFIED (C++ enumerator), 578
WIFI_REASON_TIMEOUT (C++ enumerator), 579
WIFI_REASON_TRANSMISSION_LINK_ESTABLISH_FAILED (C++ enumerator), 579
WIFI_REASON_UNKNOWN_BA (C++ enumerator), 579
WIFI_REASON_UNSPECIFIED (C++ enumerator), 578
WIFI_REASON_UNSPECIFIED_QOS (C++ enumerator), 578
WIFI_REASON_UNSUPP_RSN_IE_VERSION (C++ enumerator), 578
WIFI_ROC_CANCEL (C 宏), 575
WIFI_ROC_REQ (C 宏), 575
wifi_sae_pwe_method_t (C++ enum), 581
wifi_scan_config_t (C++ class), 563
wifi_scan_config_t::bssid (C++ member), 564
wifi_scan_config_t::channel (C++ member), 564
wifi_scan_config_t::home_chan_dwell_time (C++ member), 564
wifi_scan_config_t::scan_time (C++ member), 564
wifi_scan_config_t::scan_type (C++ member), 564
wifi_scan_config_t::show_hidden (C++ member), 564
wifi_scan_config_t::ssid (C++ member), 564
wifi_scan_method_t (C++ enum), 580
wifi_scan_threshold_t (C++ class), 565
wifi_scan_threshold_t::authmode (C++ member), 565
wifi_scan_threshold_t::rssi (C++ member), 565
wifi_scan_time_t (C++ class), 563
wifi_scan_time_t::active (C++ member), 563
wifi_scan_time_t::passive (C++ member), 563
WIFI_SCAN_TYPE_ACTIVE (C++ enumerator), 579
WIFI_SCAN_TYPE_PASSIVE (C++ enumerator), 579
wifi_scan_type_t (C++ enum), 579
WIFI_SECOND_CHAN_ABOVE (C++ enumerator), 579
WIFI_SECOND_CHAN_BELOW (C++ enumerator), 579
WIFI_SECOND_CHAN_NONE (C++ enumerator), 579
wifi_second_chan_t (C++ enum), 579
WIFI_SOFTAP_BEACON_MAX_LEN (C 宏), 562
wifi_sort_method_t (C++ enum), 580
wifi_sta_config_t (C++ class), 566
wifi_sta_config_t::bssid (C++ member), 566
wifi_sta_config_t::bssid_set (C++ member), 566
wifi_sta_config_t::btm_enabled (C++ member), 566
wifi_sta_config_t::channel (C++ member), 566
wifi_sta_config_t::failure_retry_cnt (C++ member), 567
wifi_sta_config_t::listen_interval (C++ member), 566
wifi_sta_config_t::password (C++ member), 566
wifi_sta_config_t::pmf_cfg (C++ member), 566
wifi_sta_config_t::reserved (C++ member), 567
wifi_sta_config_t::rm_enabled (C++ member), 566
wifi_sta_config_t::sae_pwe_h2e (C++ member), 567
wifi_sta_config_t::scan_method (C++ member), 566
wifi_sta_config_t::sort_method (C++ member), 566
wifi_sta_config_t::ssid (C++ member), 566
wifi_sta_config_t::threshold (C++ member), 566
wifi_sta_config_t::transition_disable (C++ member), 567
WIFI_STA_DISCONNECTED_PM_ENABLED (C 宏), 562
wifi_sta_info_t (C++ class), 567
wifi_sta_info_t::is_mesh_child (C++ member), 567
wifi_sta_info_t::mac (C++ member), 567
wifi_sta_info_t::phy_11b (C++ member), 567
wifi_sta_info_t::phy_11g (C++ member), 567
wifi_sta_info_t::phy_11n (C++ member), 567
wifi_sta_info_t::phy_lr (C++ member), 567
wifi_sta_info_t::reserved (C++ member), 567
wifi_sta_info_t::rssi (C++ member), 567

wifi_sta_list_t (C++ class), 567
wifi_sta_list_t::num (C++ member), 567
wifi_sta_list_t::sta (C++ member), 567
WIFI_STATIC_TX_BUFFER_NUM (C 宏), 561
WIFI_STATIS_ALL (C 宏), 576
WIFI_STATIS_BUFFER (C 宏), 576
WIFI_STATIS_DIAG (C 宏), 576
WIFI_STATIS_HW (C 宏), 576
WIFI_STATIS_PS (C 宏), 576
WIFI_STATIS_RXTX (C 宏), 576
WIFI_STORAGE_FLASH (C++ enumerator), 581
WIFI_STORAGE_RAM (C++ enumerator), 581
wifi_storage_t (C++ enum), 581
WIFI_TASK_CORE_ID (C 宏), 562
WIFI_VENDOR_IE_ELEMENT_ID (C 宏), 575
wifi_vendor_ie_id_t (C++ enum), 581
wifi_vendor_ie_type_t (C++ enum), 581
WIFI_VND_IE_ID_0 (C++ enumerator), 581
WIFI_VND_IE_ID_1 (C++ enumerator), 581
WIFI_VND_IE_TYPE_ASSOC_REQ (C++ enumerator), 581
WIFI_VND_IE_TYPE_ASSOC_RESP (C++ enumerator), 581
WIFI_VND_IE_TYPE_BEACON (C++ enumerator), 581
WIFI_VND_IE_TYPE_PROBE_REQ (C++ enumerator), 581
WIFI_VND_IE_TYPE_PROBE_RESP (C++ enumerator), 581
wl_erase_range (C++ function), 1106
wl_handle_t (C++ type), 1107
WL_INVALID_HANDLE (C 宏), 1107
wl_mount (C++ function), 1106
wl_read (C++ function), 1107
wl_sector_size (C++ function), 1107
wl_size (C++ function), 1107
wl_unmount (C++ function), 1106
wl_write (C++ function), 1106
WPA3_SAE_PWE_BOTH (C++ enumerator), 581
WPA3_SAE_PWE_HASH_TO_ELEMENT (C++ enumerator), 581
WPA3_SAE_PWE_HUNT_AND_PECK (C++ enumerator), 581
WPA3_SAE_PWE_UNSPECIFIED (C++ enumerator), 581
WPS_FAIL_REASON_MAX (C++ enumerator), 584
WPS_FAIL_REASON_NORMAL (C++ enumerator), 584
WPS_FAIL_REASON_RECV_M2D (C++ enumerator), 584

X

xEventGroupClearBits (C++ function), 1243
xEventGroupClearBitsFromISR (C 宏), 1247
xEventGroupCreate (C++ function), 1241
xEventGroupCreateStatic (C++ function), 1241
xEventGroupGetBits (C 宏), 1248
xEventGroupGetBitsFromISR (C++ function), 1246
xEventGroupSetBits (C++ function), 1244
xEventGroupSetBitsFromISR (C 宏), 1247
xEventGroupSync (C++ function), 1245
xEventGroupWaitBits (C++ function), 1242
xMessageBufferCreate (C 宏), 1256
xMessageBufferCreateStatic (C 宏), 1257
xMessageBufferIsEmpty (C 宏), 1263
xMessageBufferIsFull (C 宏), 1262
xMessageBufferNextLengthBytes (C 宏), 1263
xMessageBufferReceive (C 宏), 1260
xMessageBufferReceiveCompletedFromISR (C 宏), 1263
xMessageBufferReceiveFromISR (C 宏), 1261
xMessageBufferReset (C 宏), 1263
xMessageBufferSend (C 宏), 1258
xMessageBufferSendCompletedFromISR (C 宏), 1263
xMessageBufferSendFromISR (C 宏), 1259
xMessageBufferSpaceAvailable (C 宏), 1263
xMessageBufferSpacesAvailable (C 宏), 1263
xQueueAddToSet (C++ function), 1201
xQueueCreate (C 宏), 1202
xQueueCreateSet (C++ function), 1200
xQueueCreateStatic (C 宏), 1203
xQueueGenericCreate (C++ function), 1200
xQueueGenericCreateStatic (C++ function), 1200
xQueueGenericSend (C++ function), 1195
xQueueGenericSendFromISR (C++ function), 1194
xQueueGiveFromISR (C++ function), 1195
xQueueIsQueueEmptyFromISR (C++ function), 1200
xQueueIsQueueFullFromISR (C++ function), 1200
xQueueOverwrite (C 宏), 1207
xQueueOverwriteFromISR (C 宏), 1210
xQueuePeek (C++ function), 1196
xQueuePeekFromISR (C++ function), 1197
xQueueReceive (C++ function), 1197
xQueueReceiveFromISR (C++ function), 1199
xQueueRemoveFromSet (C++ function), 1201
xQueueReset (C 宏), 1211
xQueueSelectFromSet (C++ function), 1202
xQueueSelectFromSetFromISR (C++ function), 1202
xQueueSend (C 宏), 1206
xQueueSendFromISR (C 宏), 1211
xQueueSendToBack (C 宏), 1205
xQueueSendToBackFromISR (C 宏), 1209
xQueueSendToFront (C 宏), 1204
xQueueSendToFrontFromISR (C 宏), 1208
xRingbufferAddToQueueSetRead (C++ function), 1277

xRingbufferCanRead (C++ function), 1277
xRingbufferCreate (C++ function), 1272
xRingbufferCreateNoSplit (C++ function), 1273
xRingbufferCreateStatic (C++ function), 1273
xRingbufferGetCurFreeSize (C++ function), 1276
xRingbufferGetMaxItemSize (C++ function), 1276
xRingbufferPrintInfo (C++ function), 1278
xRingbufferReceive (C++ function), 1274
xRingbufferReceiveFromISR (C++ function), 1274
xRingbufferReceiveSplit (C++ function), 1275
xRingbufferReceiveSplitFromISR (C++ function), 1275
xRingbufferReceiveUpTo (C++ function), 1275
xRingbufferReceiveUpToFromISR (C++ function), 1276
xRingbufferRemoveFromQueueSetRead (C++ function), 1277
xRingbufferSend (C++ function), 1273
xRingbufferSendAcquire (C++ function), 1274
xRingbufferSendComplete (C++ function), 1274
xRingbufferSendFromISR (C++ function), 1273
xSemaphoreCreateBinary (C 宏), 1212
xSemaphoreCreateBinaryStatic (C 宏), 1213
xSemaphoreCreateCounting (C 宏), 1222
xSemaphoreCreateCountingStatic (C 宏), 1223
xSemaphoreCreateMutex (C 宏), 1219
xSemaphoreCreateMutexStatic (C 宏), 1219
xSemaphoreCreateRecursiveMutex (C 宏), 1220
xSemaphoreCreateRecursiveMutexStatic (C 宏), 1221
xSemaphoreGetMutexHolder (C 宏), 1224
xSemaphoreGetMutexHolderFromISR (C 宏), 1224
xSemaphoreGive (C 宏), 1215
xSemaphoreGiveFromISR (C 宏), 1217
xSemaphoreGiveRecursive (C 宏), 1216
xSemaphoreTake (C 宏), 1213
xSemaphoreTakeFromISR (C 宏), 1219
xSemaphoreTakeRecursive (C 宏), 1214
xSTATIC_RINGBUFFER (C++ class), 1278
xStreamBufferBytesAvailable (C++ function), 1253
xStreamBufferCreate (C 宏), 1254
xStreamBufferCreateStatic (C 宏), 1255
xStreamBufferIsEmpty (C++ function), 1253
xStreamBufferIsFull (C++ function), 1253
xStreamBufferReceive (C++ function), 1251
xStreamBufferReceiveCompletedFromISR (C++ function), 1254
xStreamBufferReceiveFromISR (C++ function), 1252
xStreamBufferReset (C++ function), 1253
xStreamBufferSend (C++ function), 1249
xStreamBufferSendCompletedFromISR (C++ function), 1253
xStreamBufferSendFromISR (C++ function), 1250
xStreamBufferSetTriggerLevel (C++ function), 1253
xStreamBufferSpacesAvailable (C++ function), 1253
xTaskAbortDelay (C++ function), 1176
xTaskCallApplicationTaskHook (C++ function), 1184
xTaskCreate (C++ function), 1172
xTaskCreatePinnedToCore (C++ function), 1171
xTaskCreateStatic (C++ function), 1173
xTaskCreateStaticPinnedToCore (C++ function), 1173
xTaskGenericNotify (C++ function), 1187
xTaskGenericNotifyFromISR (C++ function), 1188
xTaskGetApplicationTaskTag (C++ function), 1183
xTaskGetApplicationTaskTagFromISR (C++ function), 1183
xTaskGetHandle (C++ function), 1182
xTaskGetIdleTaskHandle (C++ function), 1184
xTaskGetTickCount (C++ function), 1182
xTaskGetTickCountFromISR (C++ function), 1182
xTaskNotify (C 宏), 1192
xTaskNotifyAndQuery (C 宏), 1192
xTaskNotifyAndQueryFromISR (C 宏), 1192
xTaskNotifyFromISR (C 宏), 1192
xTaskNotifyGive (C 宏), 1192
xTaskNotifyStateClear (C++ function), 1191
xTaskNotifyWait (C++ function), 1189
xTaskResumeAll (C++ function), 1181
xTaskResumeFromISR (C++ function), 1180
xtensa_perfmon_config (C++ class), 1341
xtensa_perfmon_config::call_function (C++ member), 1341
xtensa_perfmon_config::call_params (C++ member), 1341
xtensa_perfmon_config::callback (C++ member), 1341
xtensa_perfmon_config::callback_params (C++ member), 1341
xtensa_perfmon_config::counters_size (C++ member), 1341
xtensa_perfmon_config::max_deviation (C++ member), 1341
xtensa_perfmon_config::repeat_count (C++ member), 1341
xtensa_perfmon_config::select_mask

(*C++ member*), 1341
xtensa_perfmon_config::tracelevel
(*C++ member*), 1341
xtensa_perfmon_config_t (*C++ type*), 1342
xtensa_perfmon_dump (*C++ function*), 1340
xtensa_perfmon_exec (*C++ function*), 1341
xtensa_perfmon_init (*C++ function*), 1340
xtensa_perfmon_overflow (*C++ function*), 1340
xtensa_perfmon_reset (*C++ function*), 1340
xtensa_perfmon_start (*C++ function*), 1340
xtensa_perfmon_stop (*C++ function*), 1340
xtensa_perfmon_value (*C++ function*), 1340
xtensa_perfmon_view_cb (*C++ function*), 1341
xTimerChangePeriod (*C 宏*), 1233
xTimerChangePeriodFromISR (*C 宏*), 1238
xTimerCreate (*C++ function*), 1224
xTimerCreateStatic (*C++ function*), 1226
xTimerDelete (*C 宏*), 1234
xTimerGetExpiryTime (*C++ function*), 1231
xTimerGetPeriod (*C++ function*), 1231
xTimerGetTimerDaemonTaskHandle (*C++ function*), 1229
xTimerIsTimerActive (*C++ function*), 1229
xTimerPendFunctionCall (*C++ function*), 1230
xTimerPendFunctionCallFromISR (*C++ function*), 1229
xTimerReset (*C 宏*), 1234
xTimerResetFromISR (*C 宏*), 1239
xTimerStart (*C 宏*), 1232
xTimerStartFromISR (*C 宏*), 1236
xTimerStop (*C 宏*), 1232
xTimerStopFromISR (*C 宏*), 1237

环境变量
CONFIG_ESPTOOLPY_FLASHSIZE, 1035
CONFIG_LOG_DEFAULT_LEVEL, 1318
CONFIG_LWIP_SNTP_UPDATE_DELAY, 1361
CONFIG_LWIP_USE_ONLY_LWIP_SELECT, 1090
CONFIG_SPIRAM_BANKSWITCH_ENABLE, 1307
CONFIG_SPIRAM_BANKSWITCH_RESERVE, 1307