ESP32-WROOM-32/32U MODULE

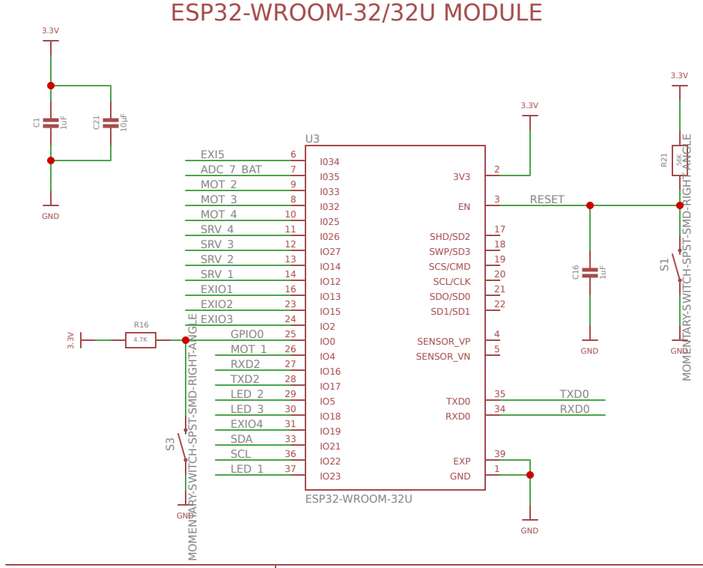

MPU6050 IMU

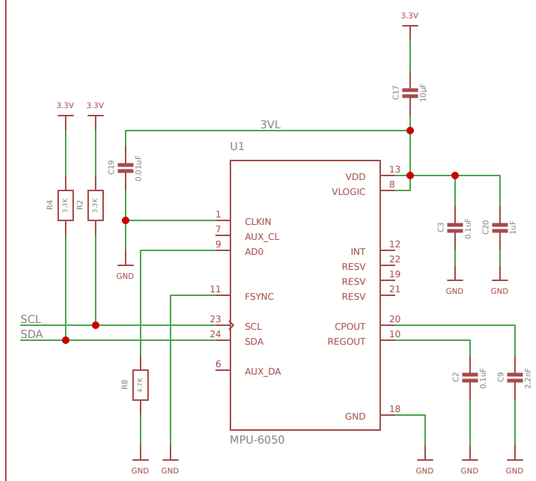

POWER AND FILTERING

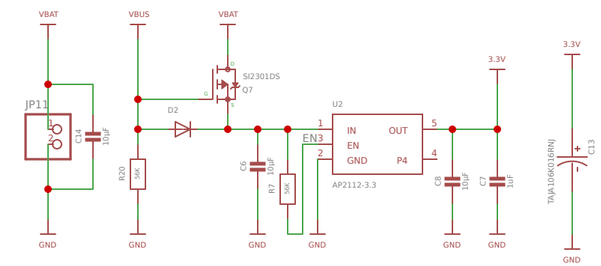

BATTERY MONITORING

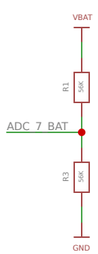

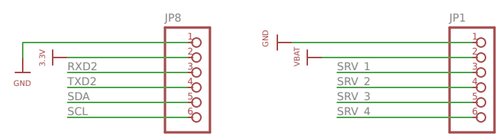

MOTOR DRIVERs

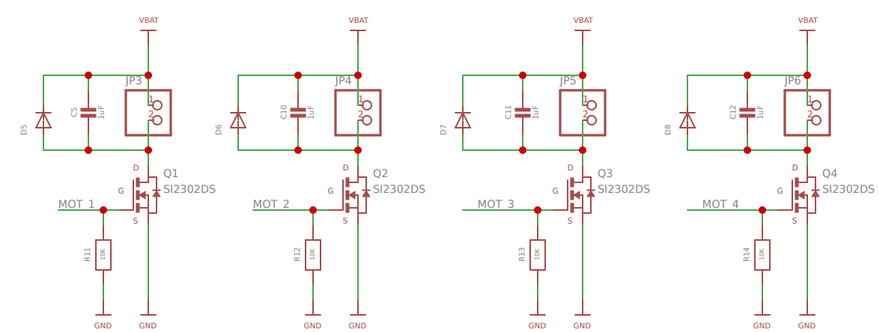

USB TO SERIAL CONVERTER

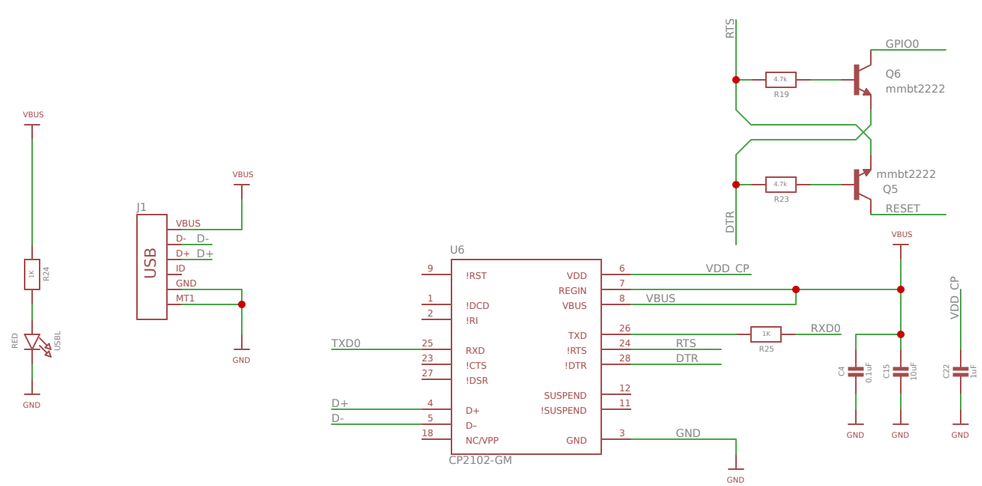

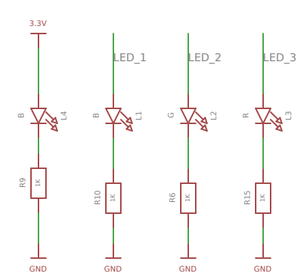

TITLE: >DRAWING_NAME	
Document Number:	REV:
Date: >LAST_DATE_TIME	Sheet: >SHEET